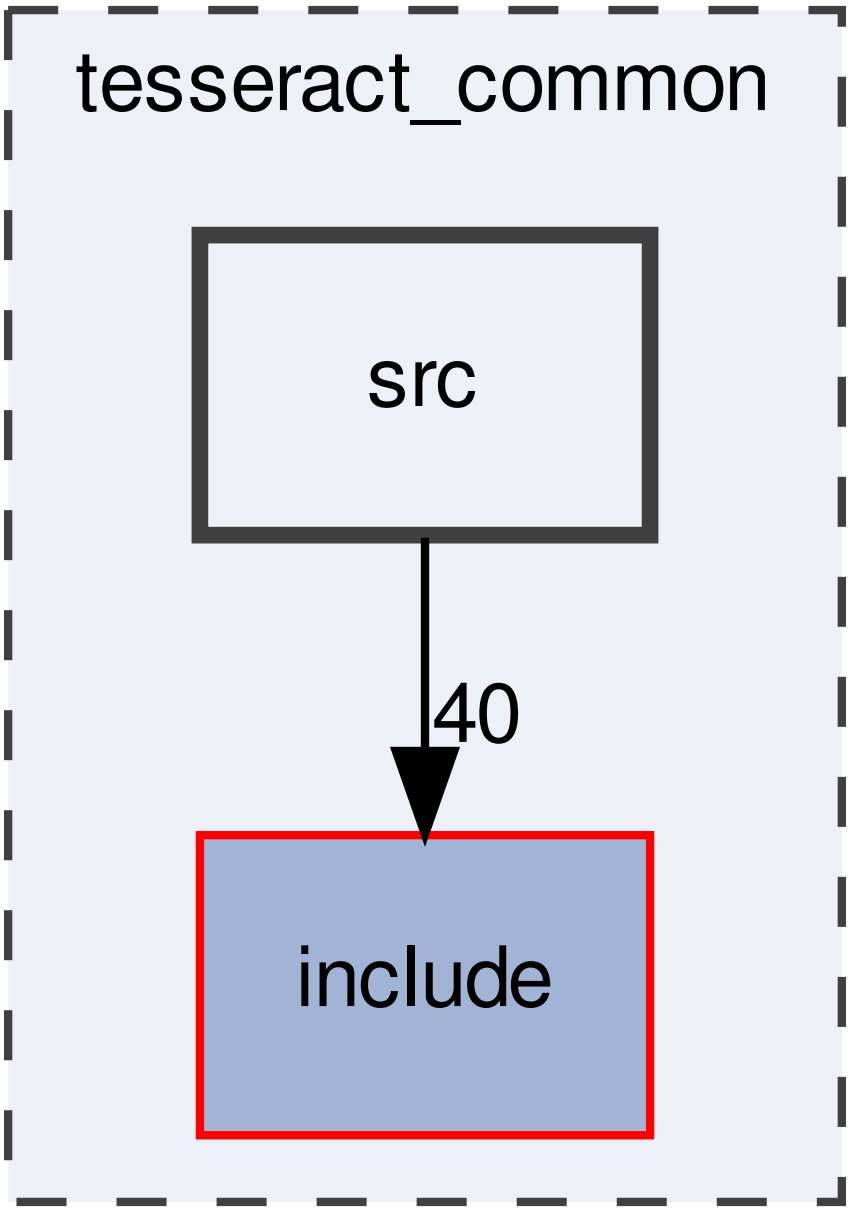
tesseract_common
src
40
include