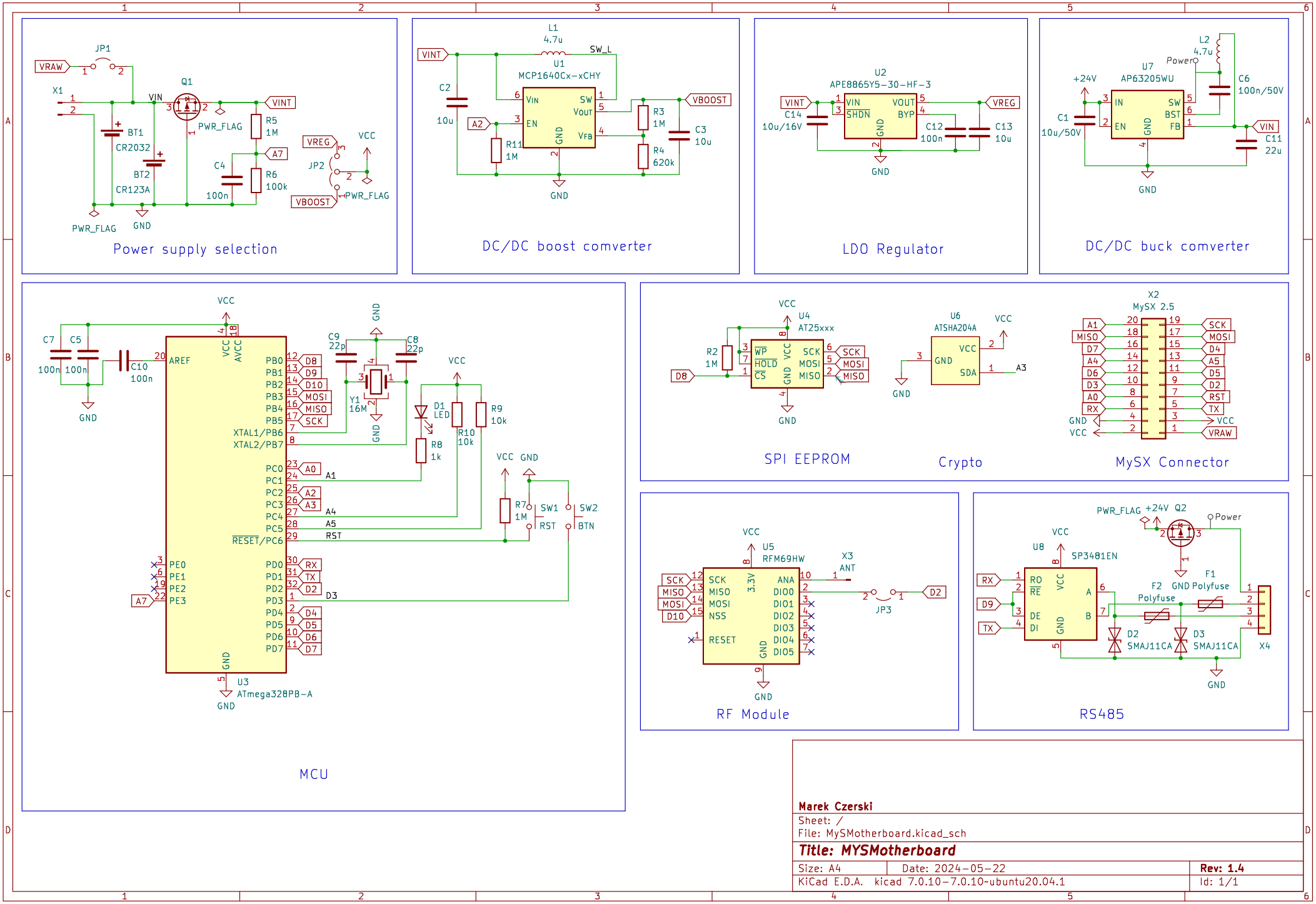
Power supply selection
DC/DC boost comverter
LDO Regulator
DC/DC buck comverter
MCU
SPI EEPROM
Crypto
MySX Connector
RF Module
RS485
Marek Czerski
Sheet: /
File: MySMotherboard.kicad_sch
Title: MYSMotherboard
Size: A4
Date: 2024-05-22
Rev: 1.4
KiCad E.D.A. kicad 7.0.10-7.0.10~ubuntu20.04.1
Id: 1/1