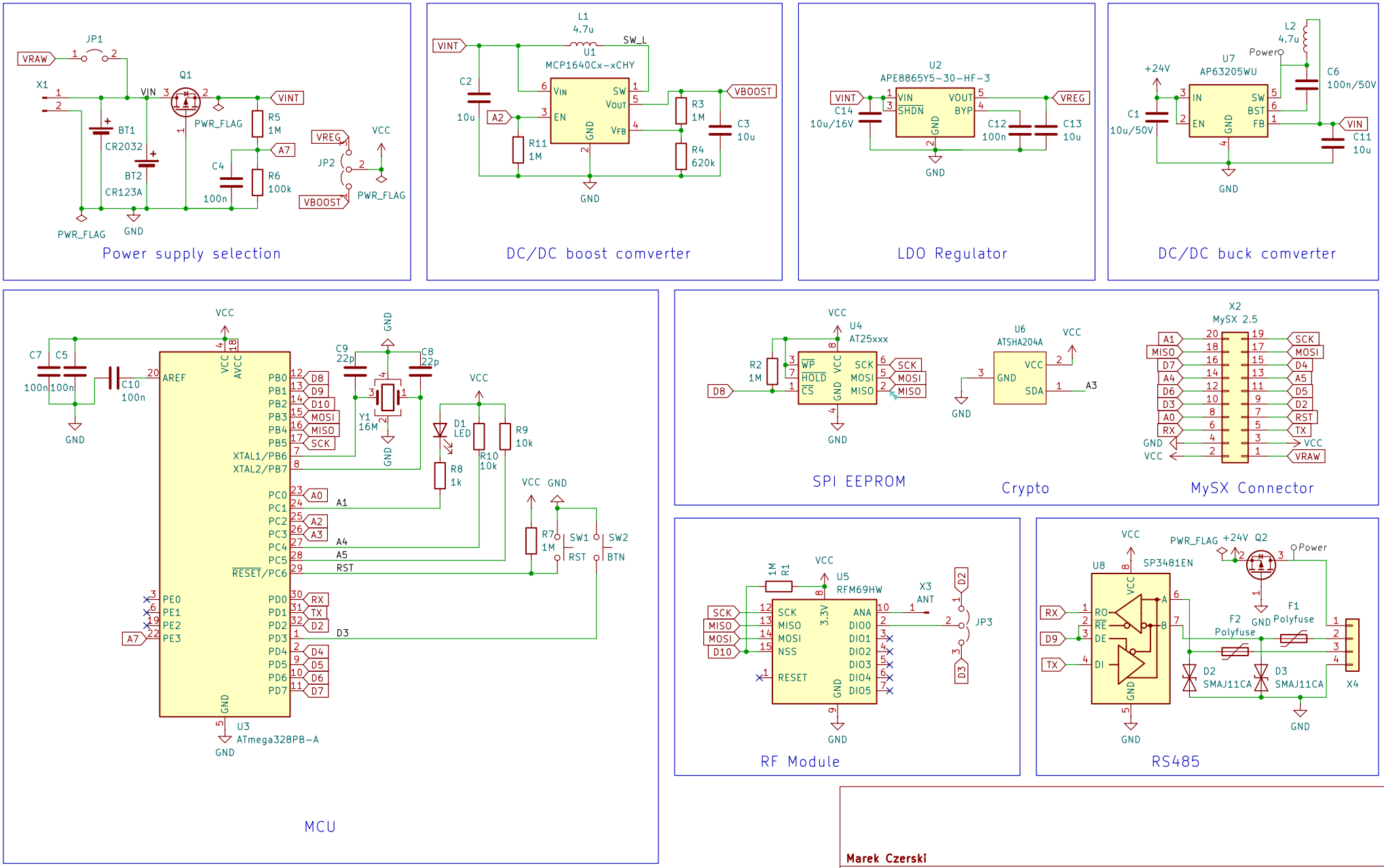

Marek Czerski

Sheet: /

File: MySMotherboard.kicad_sch

Title: MYSMotherboard

Size: A4	Date: 2024-05-22	**Rev: 1.5**
KiCad E.D.A. 8.0.9		Id: 1/1