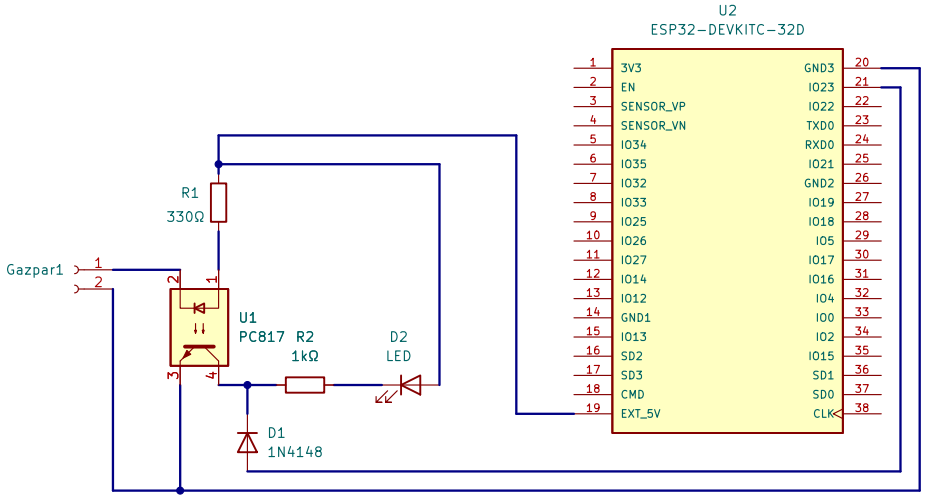

H1
MountingHole_2.5mm_Pad_TopOnly

H2
MountingHole_2.5mm_Pad_TopOnly

H3
MountingHole_2.5mm_Pad_TopOnly

H4
MountingHole_2.5mm_Pad_TopOnly

Sheet: /
File: Gazpar.kicad_sch

Title:

Size: A5	Date:	**Rev:**
KiCad E.D.A. eeschema 6.0.10+dfsg-1~bpo11+1		Id: 1/1