CIS 678 Machine Learning

Special Topics (Recurrent Neural Networks)

Outline

Introduction to

- Recurrent Neural Networks (RNNs)
- Transformers
- Generative Modeling
- Foundational Models

Outline

Introduction to

- **Recurrent Neural Networks (RNNs)**
- Transformers
- Generative Modeling
- Foundational Models

Recurrent Neural Networks (RNNs)

Originally designed to Solve:

- Sequential Problems
  - *NLP (MT, ...), Speech Recognition,...*
  - *DNA Sequencing*
- Time-series Problems

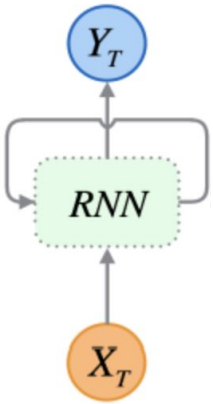

ref

Recurrent Neural Networks (RNNs)

Originally designed to Solve:

- Sequential Problems
  - *NLP (MT, ...), Speech Recognition,...*
  - *DNA Sequencing*
- Time-series Problems

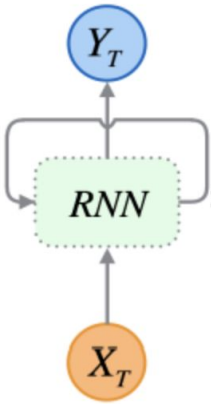

ref

Recurrent Neural Networks

Originally designed to Solve:

- Sequential Problems
  - *NLP (MT, ...), Speech Recognition,...*
  - *DNA Sequencing*
- Time-series Problems

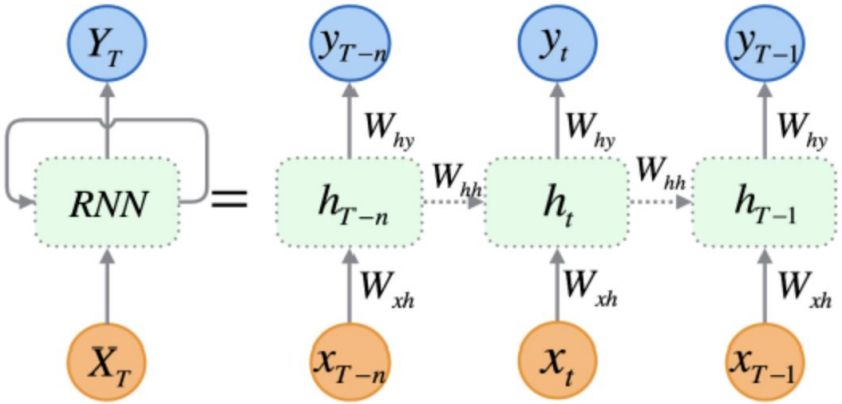

ref

Recurrent Neural Networks (RNNs)

- Time-series Problems

$$f(x_{t+h,} \ldots x_{t+2,} x_{t+1,} | x_{t,} x_{t-1,} x_{t-2,} \ldots x_1)$$

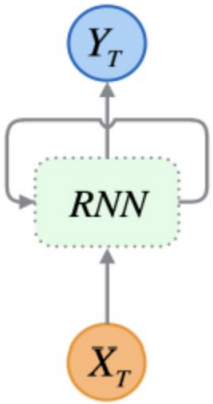

ref

Basic RNN Architecture

$f(x_{t+h,} \ldots x_{t+2,} x_{t+1,} | x_{t,} x_{t-1,} x_{t-2,} \ldots x_{1})$

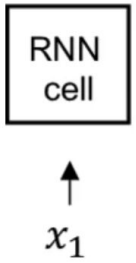

Basic RNN Architecture

$f(x_{t+h,} \ldots x_{t+2,} x_{t+1,} | x_{t,} x_{t-1,} x_{t-2,} \ldots x_1)$

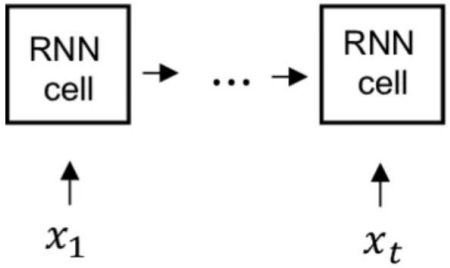

Basic RNN Architecture

$f(x_{t+h,\ldots.} x_{t+2,} x_{t+1,} | x_{t,} x_{t-1,} x_{t-2,\ldots.} x_1)$

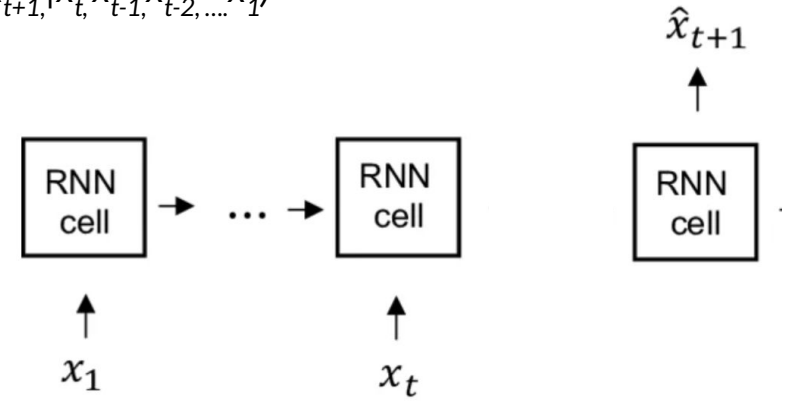

Basic RNN Architecture

$f(x_{t+h,} \ldots x_{t+2,} x_{t+1,} | x_{t,} x_{t-1,} x_{t-2,} \ldots x_1)$

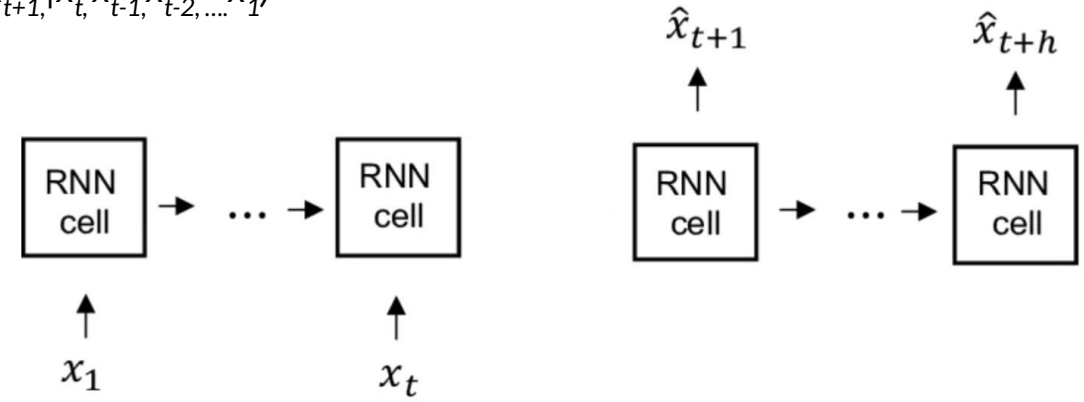

RNN code

Notebook

QA