| Sr. | Parameter | Value |
|---|---|---|
| 1 | Initial workpiece dia | 100 mm |
| 2 | Initial workpiece length | 100 mm |
| 3 | Clamp length (L2) | 15 mm |
| 4 | General turning & facing tool | Tool no. 005 |
| 5 | Grooving tool | Tool no. 098 |
| 6 | Spindle speed | 1000 rpm |
| 7 | Feed | 0.3 mm/rev |
| 8 | Maximum depth of cut | 1 mm |

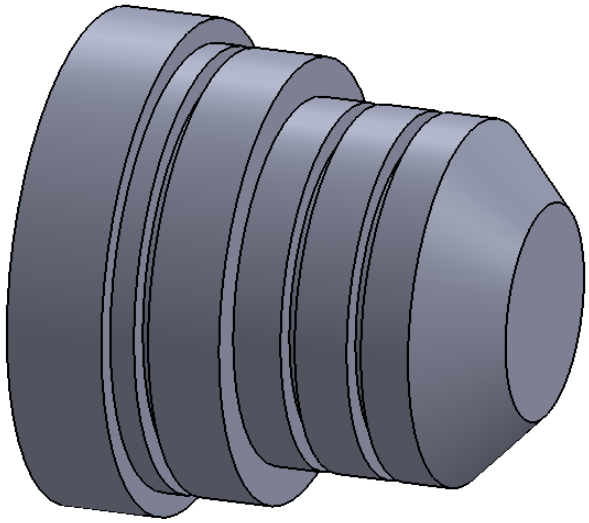

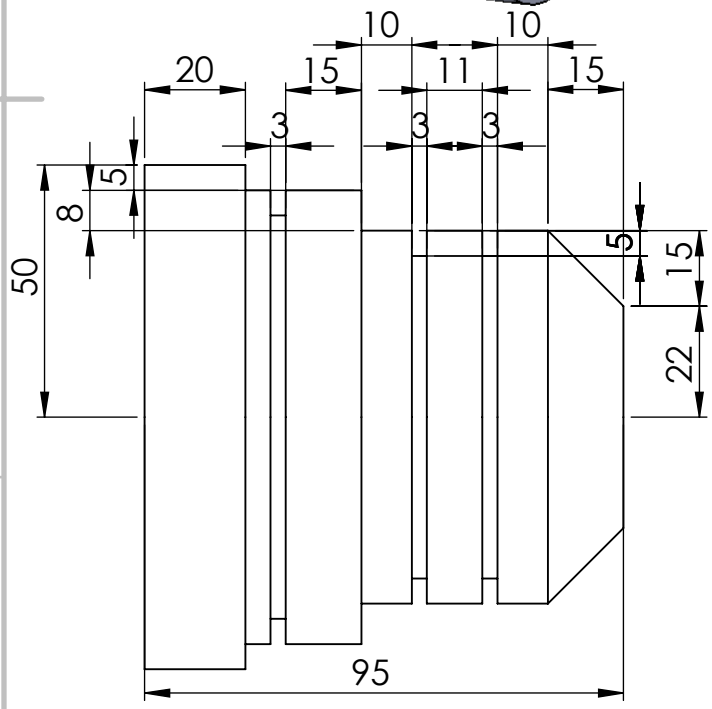


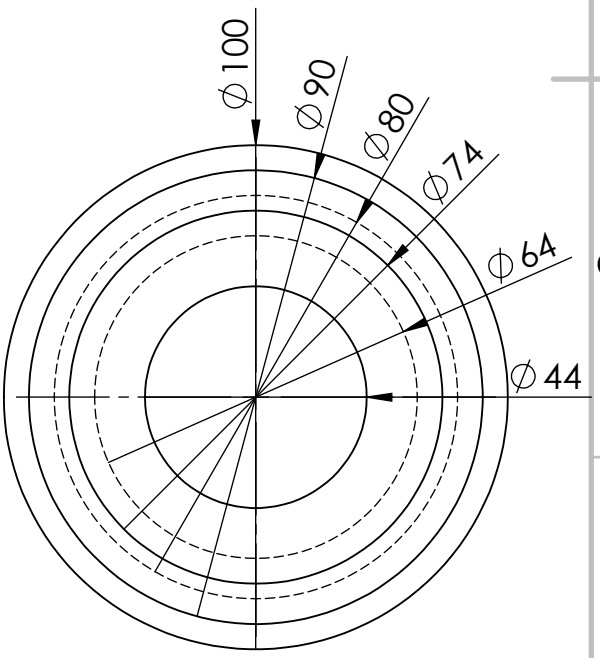


UNLESS OTHERWISE SPECIFIED:
DIMENSIONS ARE IN MILLIMETERS
SURFACE FINISH:
TOLERANCES:
LINEAR:
ANGULAR:

FINISH:

DEBURR AND BREAK SHARP EDGES

DO NOT SCALE DRAWING

REVISION

All dimensions are in mm

| | NAME | SIGNATURE | DATE |
|---|---|---|---|
| DRAWN | | | |
| CHK'D | | | |
| APPV'D | | | |
| MFG | | | |
| Q.A | | | |

TITLE:

MATERIAL:

WEIGHT:

DWG NO.

Lathe 5a

A4

SCALE:1:2

SHEET 1 OF 1