Sr.	Parameter	Value
1	Initial workpiece length	50 mm
2	Initial workpiece width	50 mm
3	Initial workpiece height	15 mm
4	End mill types	Cylindrical &Snubnose
5	Snubnose mill diameter	10 mm to 5 mm over 10 mm length
6	Cylindrical mill diameter	15 mm
7	Cylindrical mill length	50 mm
8	Maximum depth of cut	5 mm
9	Tool rotation speed	500 rpm

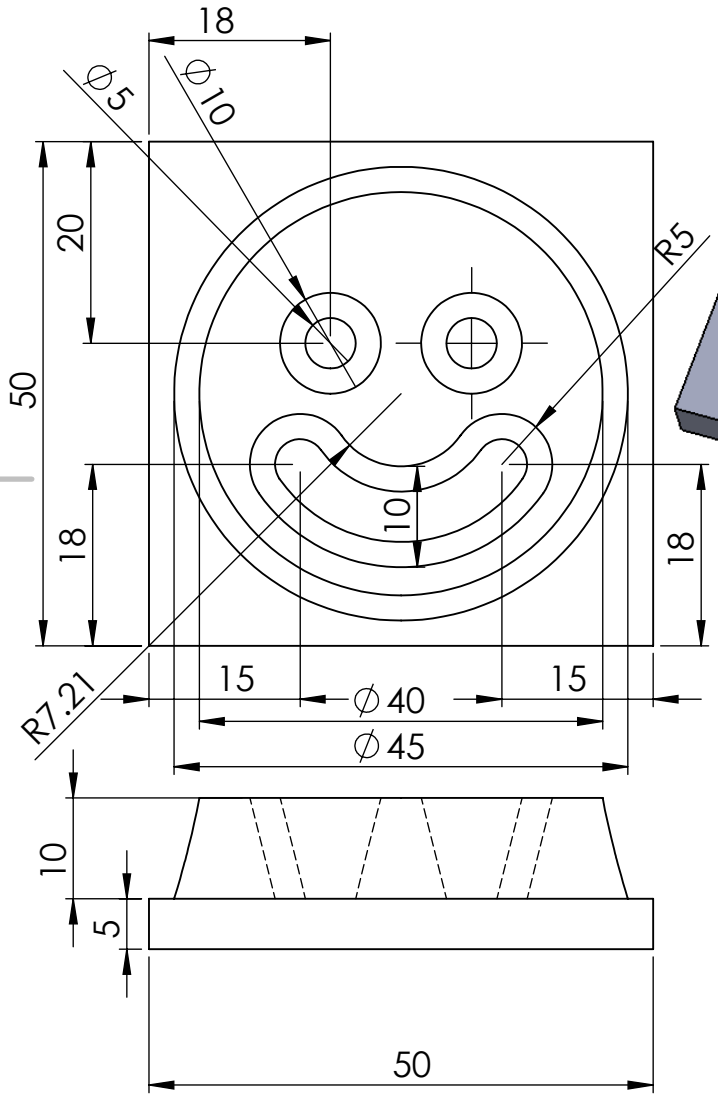

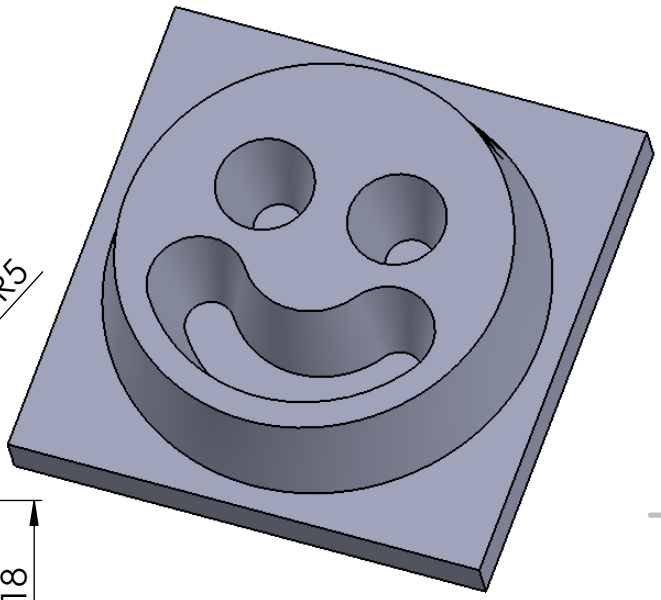

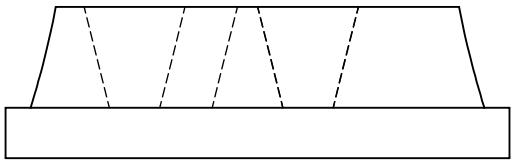

UNLESS OTHERWISE SPECIFIED:
DIMENSIONS ARE IN MILLIMETERS
SURFACE FINISH:
TOLERANCES:
LINEAR:
ANGULAR:

FINISH:

DEBURR AND BREAK SHARP EDGES

DO NOT SCALE DRAWING

REVISION

	NAME	SIGNATURE	DATE
DRAWN			
CHK'D			
APPV'D			
MFG			
Q.A			

TITLE:

All dimensions are in mm

MATERIAL:

WEIGHT:

DWG NO.

Lab 8

A4

SCALE:1:1

SHEET 1 OF 1