Sr.	Parameter	Value
1	Initial workpiece diamter	100 mm
2	Initial workpiece length	100 mm
3	Clamp length	15 mm
4	Spindle speed	1000 rpm
5	Feed	0.3 mm/rev
6	Maximum depth of cut	5 mm

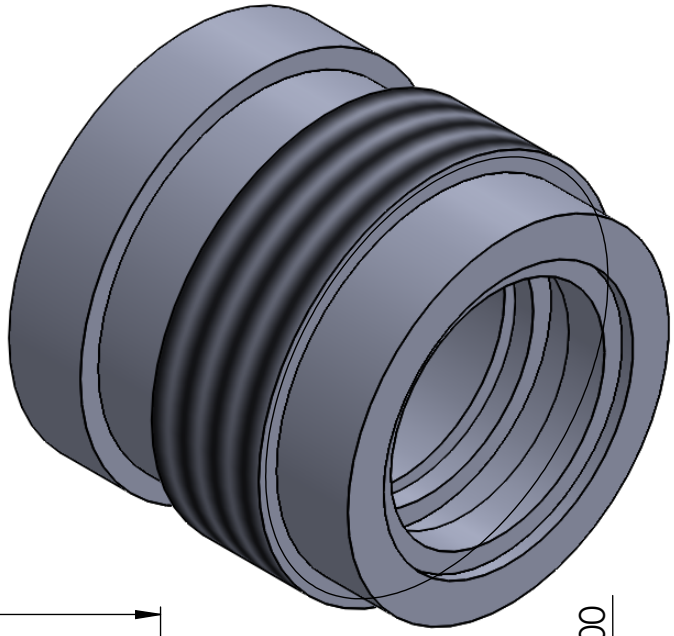

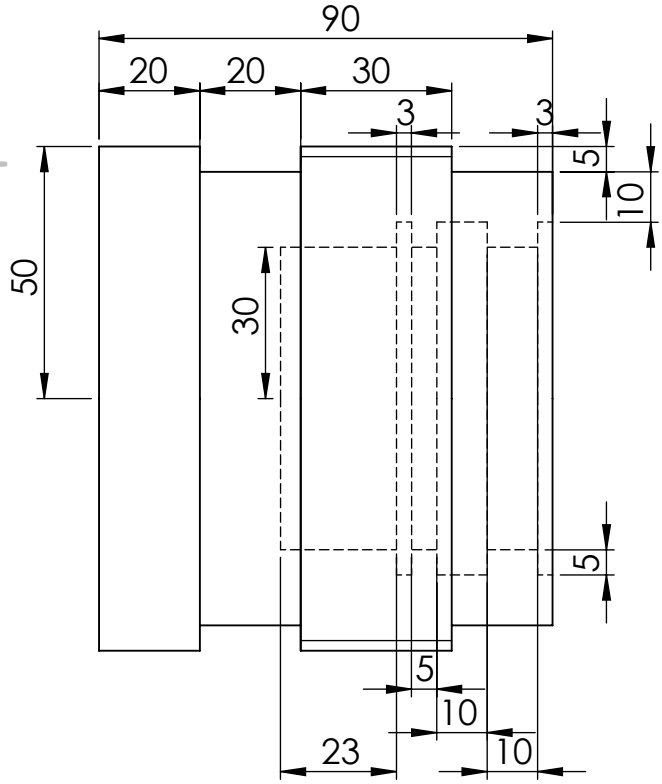

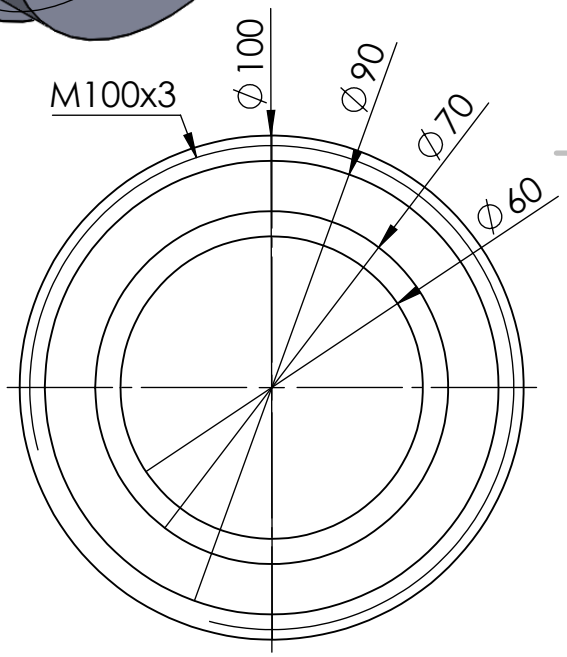

UNLESS OTHERWISE SPECIFIED:
DIMENSIONS ARE IN MILLIMETERS
SURFACE FINISH:
TOLERANCES:
LINEAR:
ANGULAR:

FINISH:

DEBURR AND BREAK SHARP EDGES

DO NOT SCALE DRAWING

REVISION

All dimensions are in mm

	NAME	SIGNATURE	DATE
DRAWN			
CHK'D			
APPV'D			
MFG			
Q.A			

TITLE:

MATERIAL:

WEIGHT:

DWG NO. Lathe3

A4

SCALE:1:2

SHEET 1 OF 1