Sr.	Parameter	Value
1	Initial workpiece length	100 mm
2	Initial workpiece width	80 mm
3	Initial workpiece height	25 mm
4	End mill types	Cylindrical
5	Cylindrical mill diameter	10 mm
6	Cylindrical mill length	25 mm
7	Maximum depth of cut	5 mm
8	Tool rotation speed	500 rpm

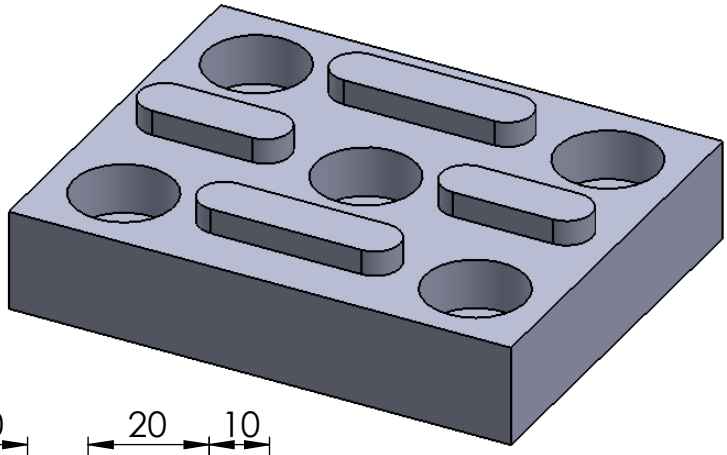

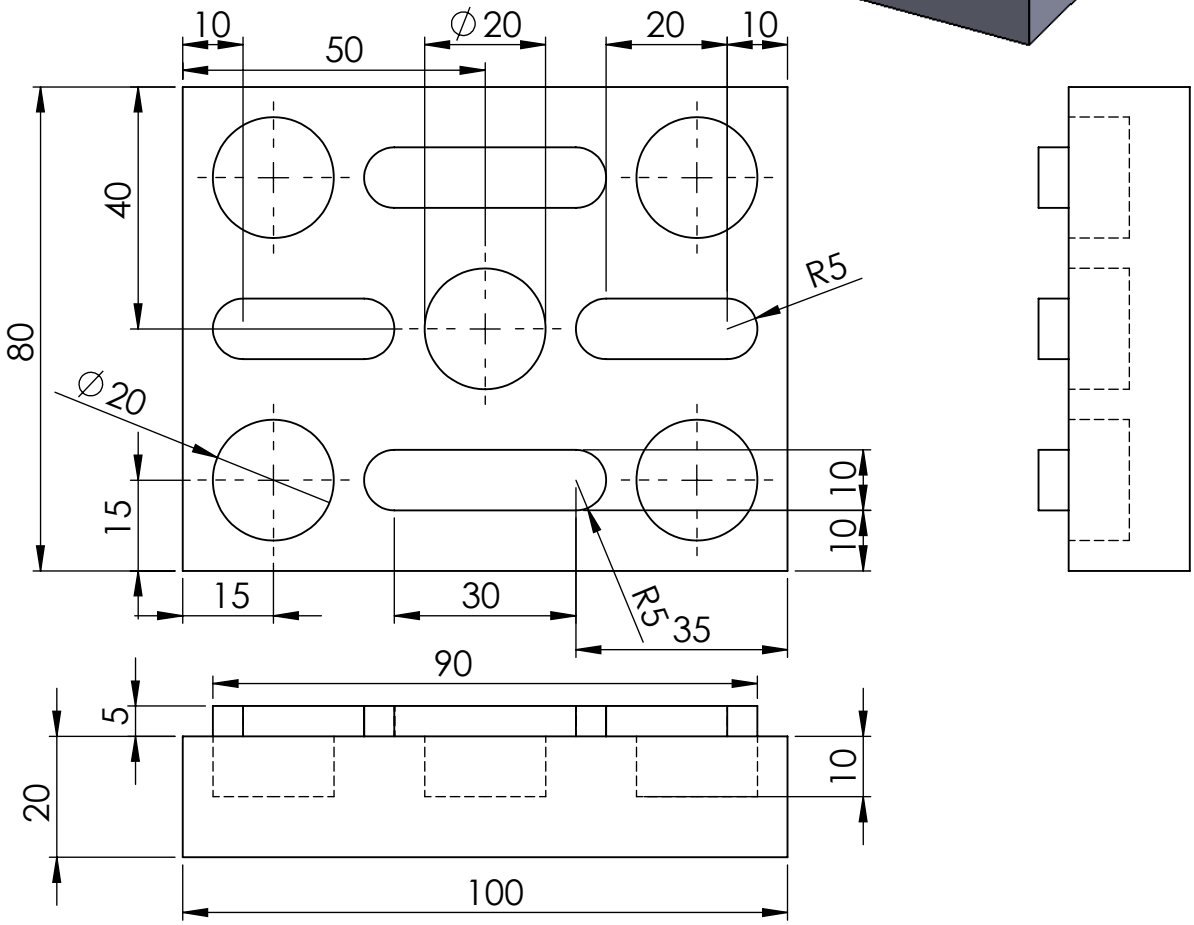

UNLESS OTHERWISE SPECIFIED:
DIMENSIONS ARE IN MILLIMETERS
SURFACE FINISH:
TOLERANCES:
LINEAR:
ANGULAR:

FINISH:

DEBURR AND BREAK SHARP EDGES

DO NOT SCALE DRAWING

REVISION

All dimensions are in mm

	NAME	SIGNATURE	DATE
DRAWN			
CHK'D			
APPV'D			
MFG			
Q.A			

TITLE:

MATERIAL:

WEIGHT:

DWG NO. Lab 7

A4

SCALE:1:2

SHEET 1 OF 1