Sr.	Parameter	Value
1	Initial workpiece dia	100 mm
2	Initial workpiece length	100 mm
3	Clamp length (L2)	15 mm
4	General turning & facing tool	Tool no. 005
5	Grooving tool	Tool no. 098
6	Spindle speed	1000 rpm
7	Feed	0.3 mm/rev
8	Maximum depth of cut	5 mm

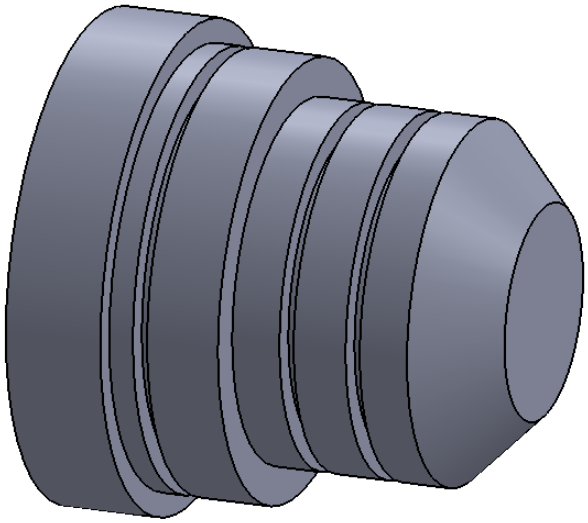

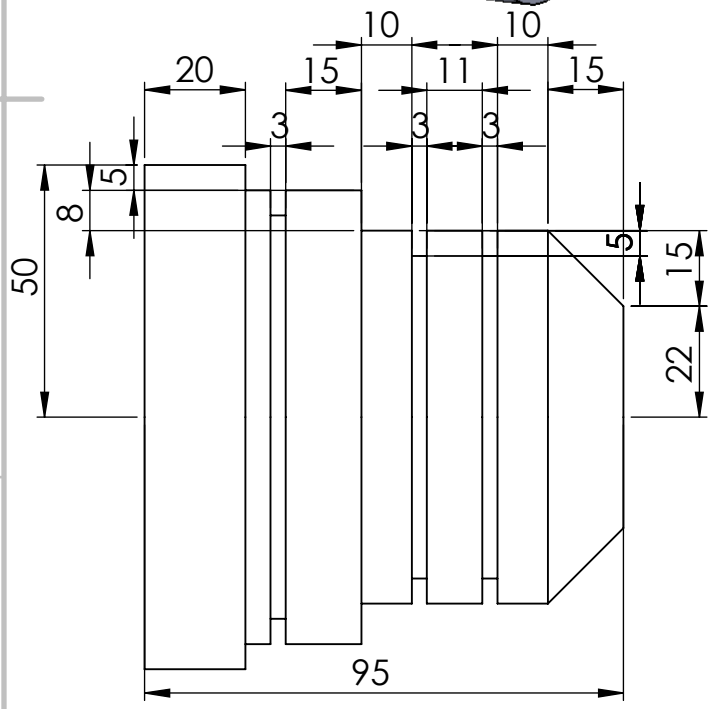

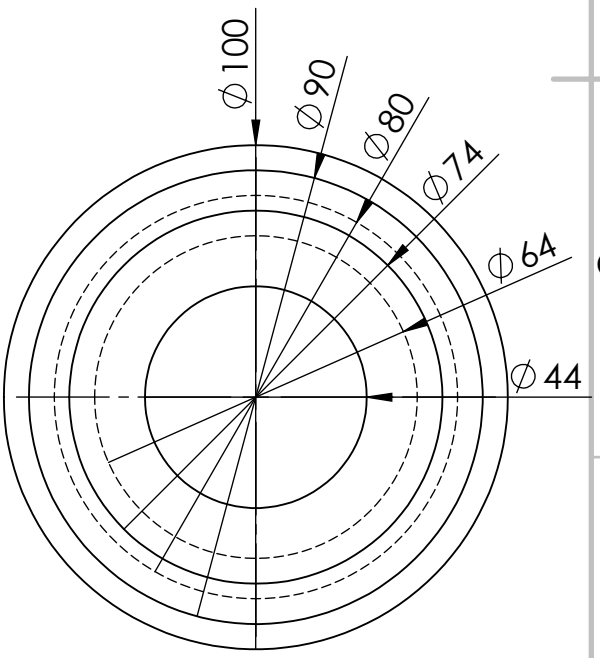

UNLESS OTHERWISE SPECIFIED:
DIMENSIONS ARE IN MILLIMETERS
SURFACE FINISH:
TOLERANCES:
LINEAR:
ANGULAR:

FINISH:

DEBURR AND BREAK SHARP EDGES

DO NOT SCALE DRAWING

REVISION

All dimensions are in mm

	NAME	SIGNATURE	DATE
DRAWN			
CHK'D			
APPV'D			
MFG			
Q.A			

TITLE:

MATERIAL:

WEIGHT:

DWG NO.

Lathe 1

A4

SCALE:1:2

SHEET 1 OF 1