Sr.	Parameter	Value
1	Initial workpiece diameter	120 mm
2	Initial workpiece height	45 mm
3	End mill types	Cylindrical, snub nose &Ball nose
4	Ball nose mill diameter	20 mm
5	Cylindrical mill diameter	10 mm
6	Snub nose end mill diameter	20 mm to 10 mm over 5 mm height
7	Lenght of all the emd mills	50 mm
8	maximum dpeth of cut	5 mm
9	Tool rotation speed	500 rpm

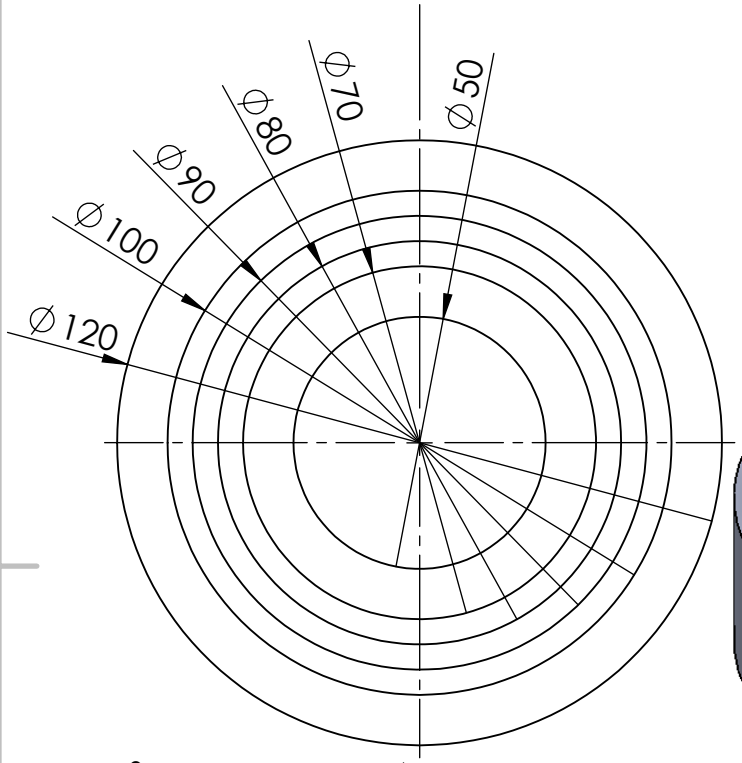

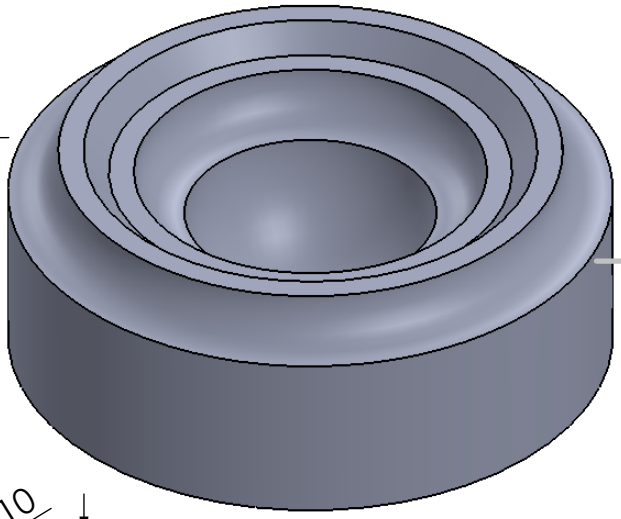

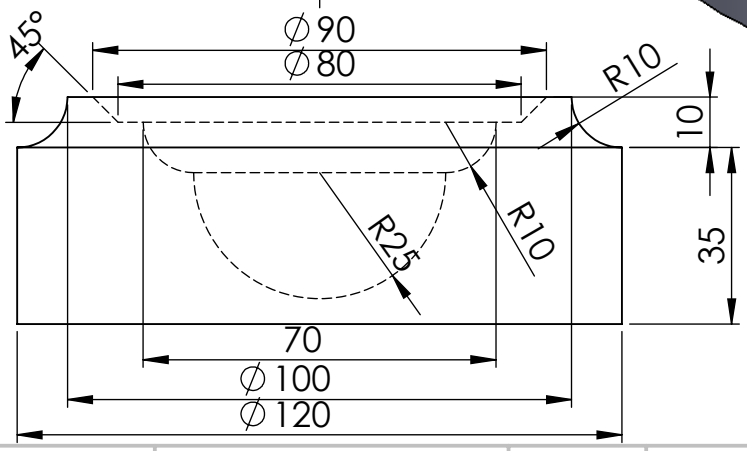

UNLESS OTHERWISE SPECIFIED:
DIMENSIONS ARE IN MILLIMETERS
SURFACE FINISH:
TOLERANCES:
LINEAR:
ANGULAR:

FINISH:

DEBURR AND BREAK SHARP EDGES

DO NOT SCALE DRAWING

REVISION

All dimensions are in mm

	NAME	SIGNATURE	DATE
DRAWN			
CHK'D			
APPV'D			
MFG			
Q.A			

TITLE:

MATERIAL:

WEIGHT:

DWG NO.

Lab 10

A4

SCALE:1:5

SHEET 1 OF 1