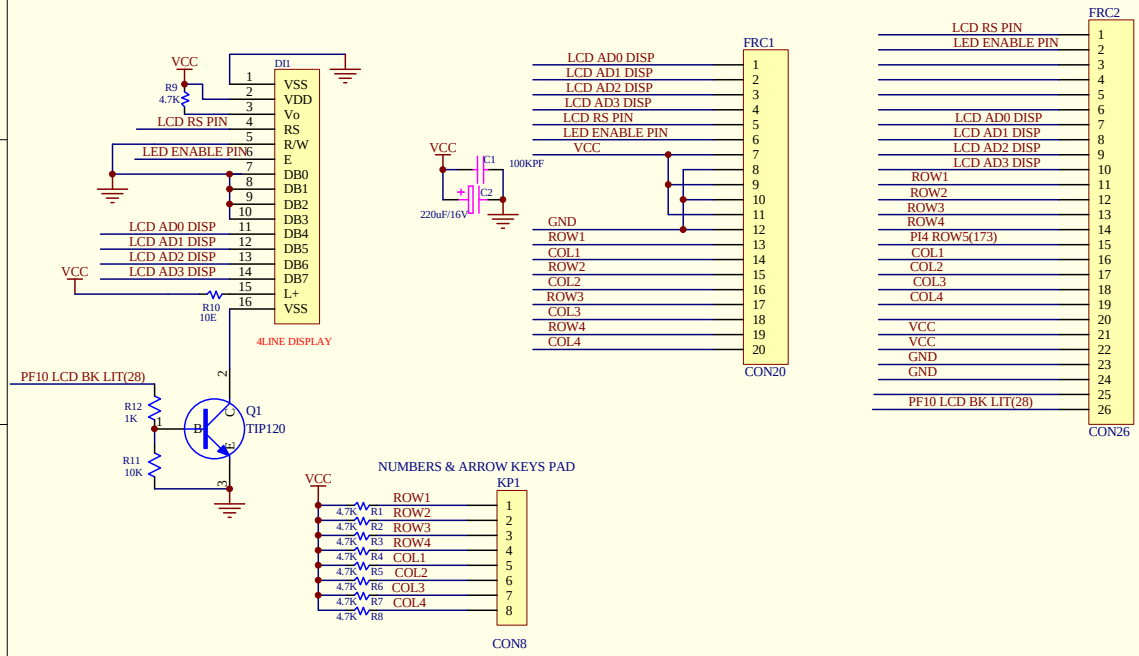

Title			
Size A4	Number		Revision
Date: 16-Oct-2015		Sheet of	
File: F:\PROJECTS SIRVEEN\DATALOGGER\POWER HELTH MONETRING\PHMU DISPLAY VER0 REV0\PHMU DISPLAY'			