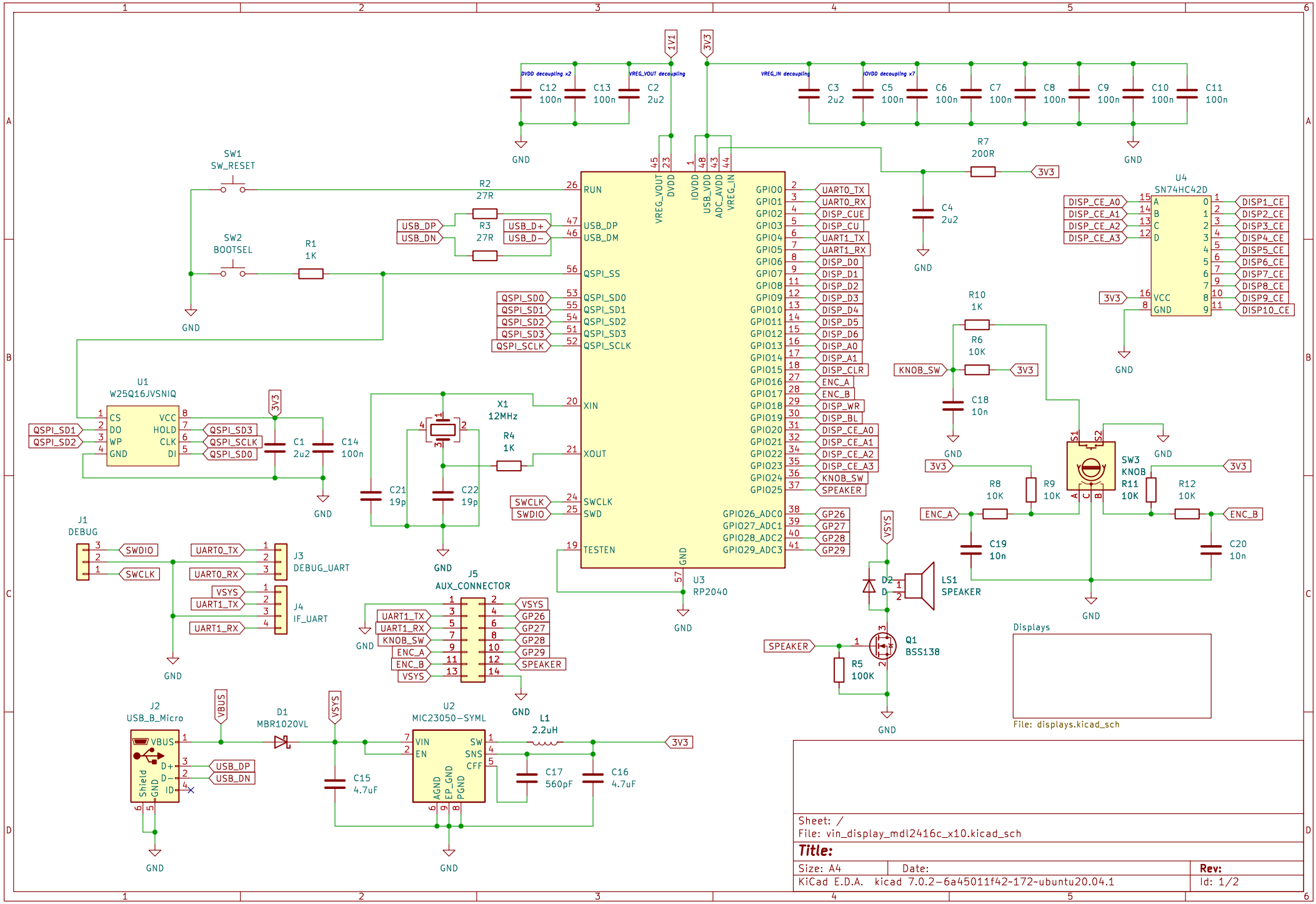
DVDD decoupling x2
VREG_VOUT decoupling
VREG_IN decoupling
IOVDD decoupling x7
C12 100n
C13 100n
C2 2u2
C3 2u2
C5 100n
C6 100n
C7 100n
C8 100n
C9 100n
C10 100n
C11 100n
1V1
3V3
GND
R7 200R
C4 2u2
SW1 SW_RESET
SW2 BOOTSEL
R1 1K
R2 27R
R3 27R
USB_DP
USB_DN
USB_D+
USB_D−
U1 W25Q16JVSNIQ
CS
DO
WP
GND
VCC
HOLD
CLK
DI
QSPI_SD1
QSPI_SD2
QSPI_SD3
QSPI_SCLK
QSPI_SD0
C1 2u2
C14 100n
X1 12MHz
R4 1K
C21 19p
C22 19p
SWCLK
SWDIO
U3 RP2040
RUN
USB_DP
USB_DM
QSPI_SS
QSPI_SD0
QSPI_SD1
QSPI_SD2
QSPI_SD3
QSPI_SCLK
XIN
XOUT
SWCLK
SWD
TESTEN
VREG_VOUT
DVDD
IOVDD
USB_VDD
ADC_AVDD
VREG_IN
GPIO0 UART0_TX
GPIO1 UART0_RX
GPIO2 DISP_CUE
GPIO3 DISP_CU
GPIO4 UART1_TX
GPIO5 UART1_RX
GPIO6 DISP_D0
GPIO7 DISP_D1
GPIO8 DISP_D2
GPIO9 DISP_D3
GPIO10 DISP_D4
GPIO11 DISP_D5
GPIO12 DISP_D6
GPIO13 DISP_A0
GPIO14 DISP_A1
GPIO15 DISP_CLR
GPIO16 ENC_A
GPIO17 ENC_B
GPIO18 DISP_WR
GPIO19 DISP_BL
GPIO20 DISP_CE_A0
GPIO21 DISP_CE_A1
GPIO22 DISP_CE_A2
GPIO23 DISP_CE_A3
GPIO24 KNOB_SW
GPIO25 SPEAKER
GPIO26_ADC0 GP26
GPIO27_ADC1 GP27
GPIO28_ADC2 GP28
GPIO29_ADC3 GP29
U4 SN74HC42D
DISP_CE_A0
DISP_CE_A1
DISP_CE_A2
DISP_CE_A3
DISP1_CE
DISP2_CE
DISP3_CE
DISP4_CE
DISP5_CE
DISP6_CE
DISP7_CE
DISP8_CE
DISP9_CE
DISP10_CE
R10 1K
R6 10K
KNOB_SW
C18 10n
SW3 KNOB
R11 10K
R12 10K
R8 10K
R9 10K
ENC_A
ENC_B
C19 10n
C20 10n
LS1 SPEAKER
D2 D
VSYS
Q1 BSS138
R5 100K
SPEAKER
Displays
File: displays.kicad_sch
J1 DEBUG
J3 DEBUG_UART
J4 IF_UART
UART0_TX
UART0_RX
UART1_TX
UART1_RX
J5 AUX_CONNECTOR
GP26
GP27
GP28
GP29
J2 USB_B_Micro
VBUS
D+
D−
ID
Shield
GND
D1 MBR1020VL
U2 MIC23050-SYML
VIN
EN
SW
SNS
CFF
AGND
EP_GND
PGND
L1 2.2uH
C15 4.7uF
C17 560pF
C16 4.7uF
Sheet: /
File: vin_display_mdl2416c_x10.kicad_sch
Title:
Size: A4
Date:
Rev:
KiCad E.D.A. kicad 7.0.2-6a45011f42~172~ubuntu20.04.1
Id: 1/2

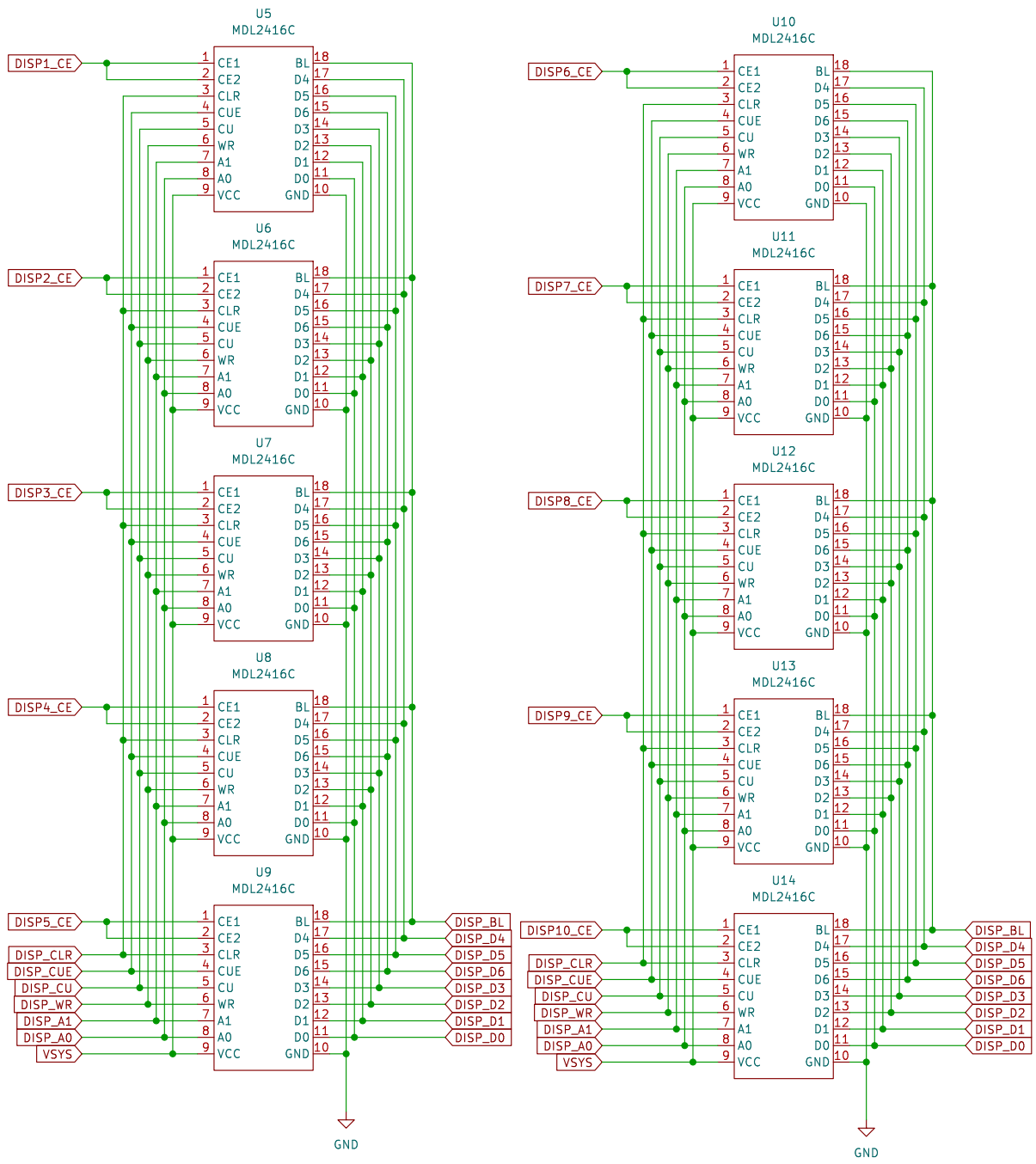

Sheet: /Displays/
File: displays.kicad_sch

Title:

Size: A4	Date:	Rev:
KiCad E.D.A. kicad 7.0.2-6a45011f42~172~ubuntu20.04.1		Id: 2/2