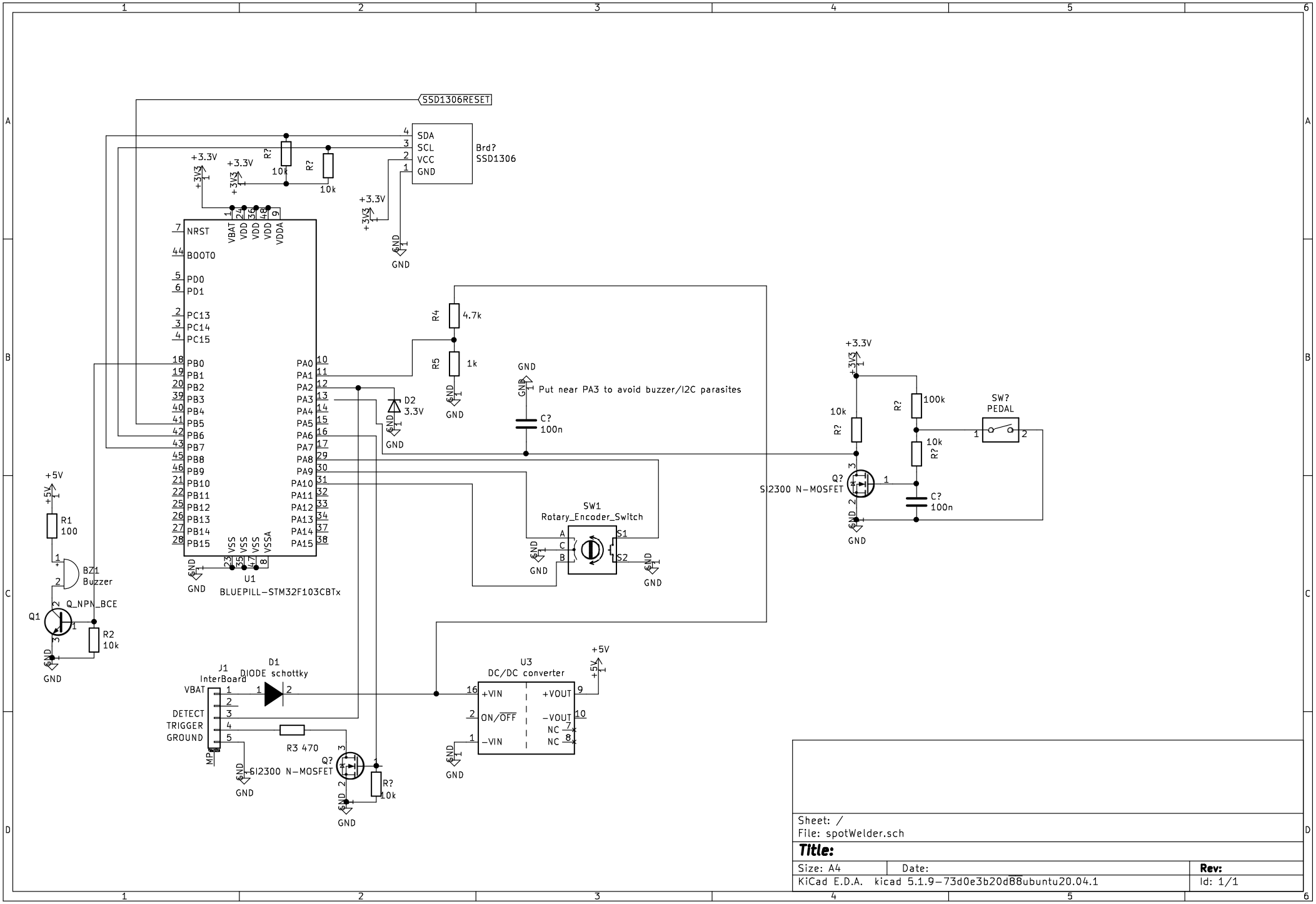
SSD1306RESET
SDA
SCL
VCC
GND
Brd?
SSD1306
+3.3V
R?
10k
NRST
BOOT0
PD0
PD1
PC13
PC14
PC15
PB0
PB1
PB2
PB3
PB4
PB5
PB6
PB7
PB8
PB9
PB10
PB11
PB12
PB13
PB14
PB15
PA0
PA1
PA2
PA3
PA4
PA5
PA6
PA7
PA8
PA9
PA10
PA11
PA12
PA13
PA14
PA15
VBAT
VDD
VDDA
VSS
VSSA
U1
BLUEPILL-STM32F103CBTx
GND
R4
4.7k
R5
1k
D2
3.3V
C?
100n
Put near PA3 to avoid buzzer/I2C parasites
SW1
Rotary_Encoder_Switch
A
C
B
S1
S2
SW?
PEDAL
100k
Q?
SI2300 N-MOSFET
+5V
R1
100
BZ1
Buzzer
Q1
Q_NPN_BCE
R2
10k
J1
InterBoard
VBAT
DETECT
TRIGGER
GROUND
MP
D1
DIODE schottky
R3 470
SI2300 N-MOSFET
U3
DC/DC converter
+VIN
ON/OFF
-VIN
+VOUT
-VOUT
NC
Sheet: /
File: spotWelder.sch
Title:
Size: A4
Date:
Rev:
KiCad E.D.A. kicad 5.1.9-73d0e3b20d88ubuntu20.04.1
Id: 1/1