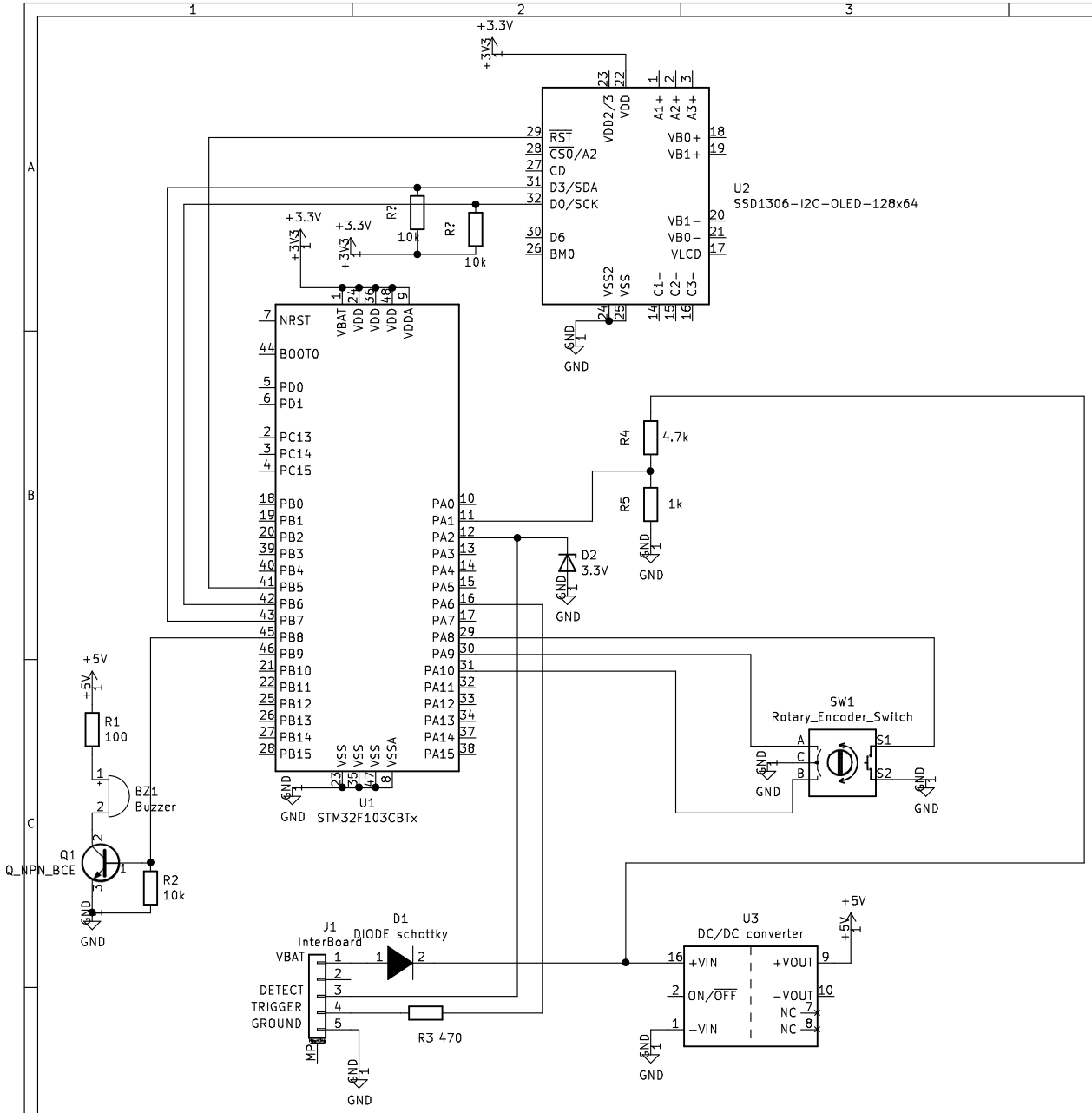


Sheet: /
File: spotWelder.sch

**Title:**

| Size: A4 | Date: | Rev: |
|---|---|---|
| KiCad E.D.A. kicad 5.1.9-73d0e3b20d88ubuntu20.04.1 | | Id: 1/1 |