Power Supply

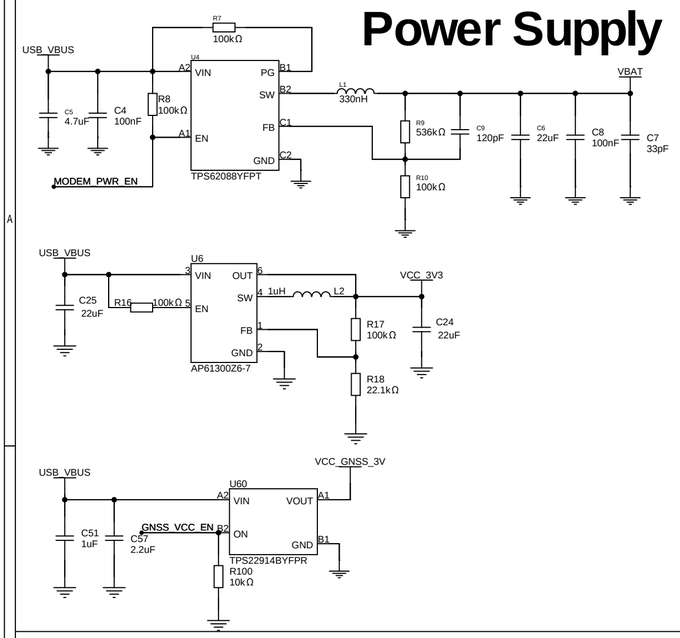

GPS

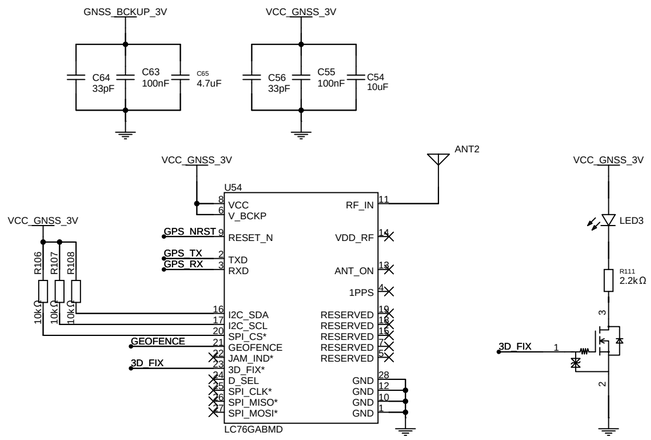

LTE Modem

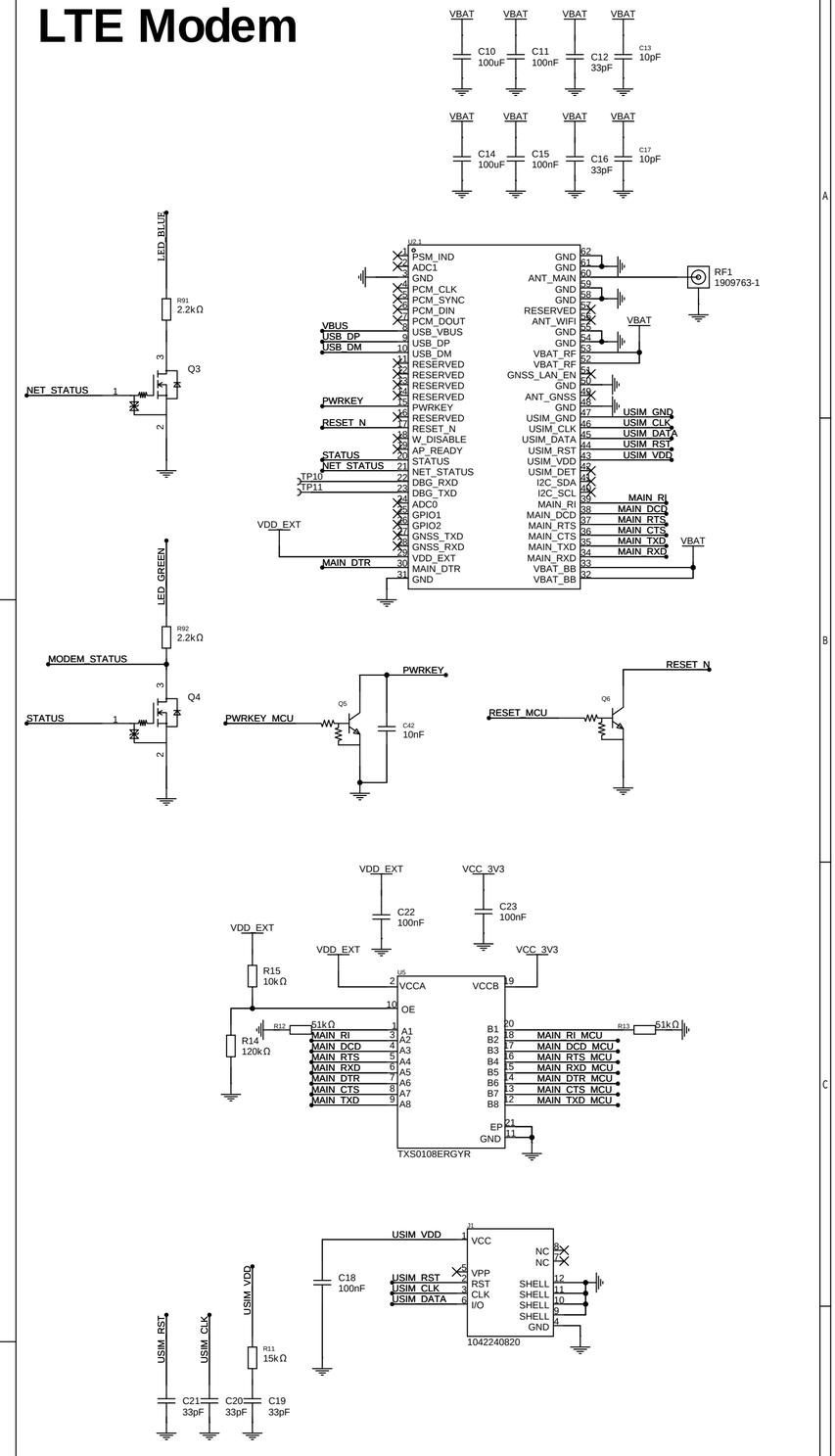

USB Switch

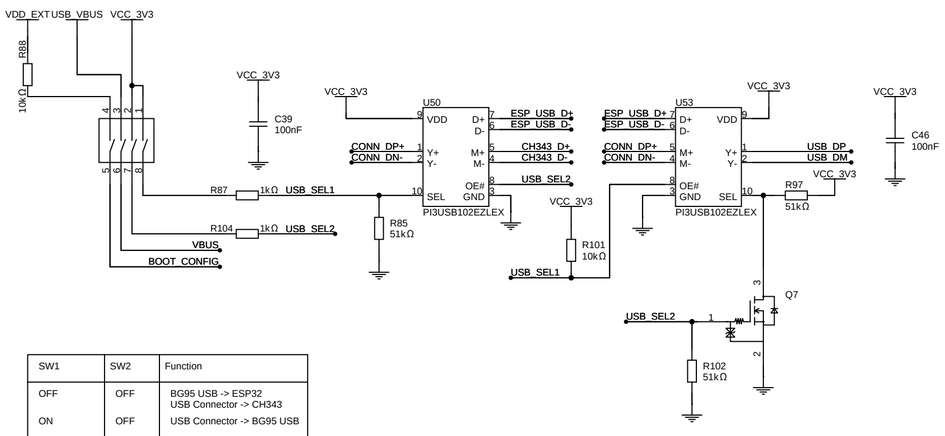

SW1	SW2	Function
OFF	OFF	BG95 USB -> ESP32 USB Connector -> CH343
ON	OFF	USB Connector -> BG95 USB
OFF	ON	USB Connector -> ESP USB
ON	ON	None

USB-UART

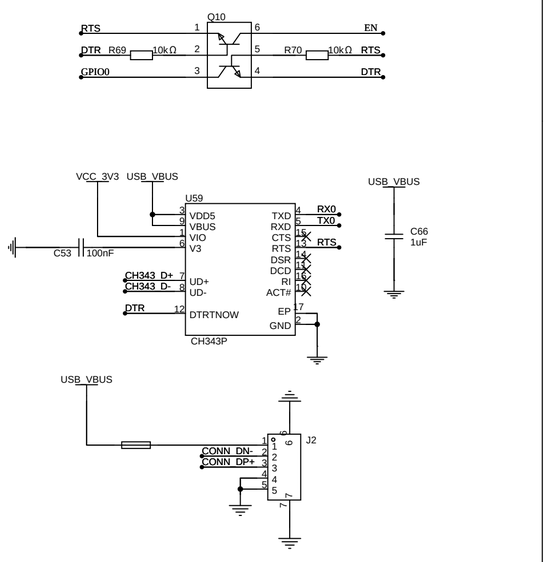

IMU

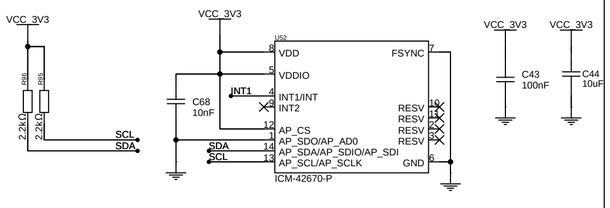

ESP32-S3

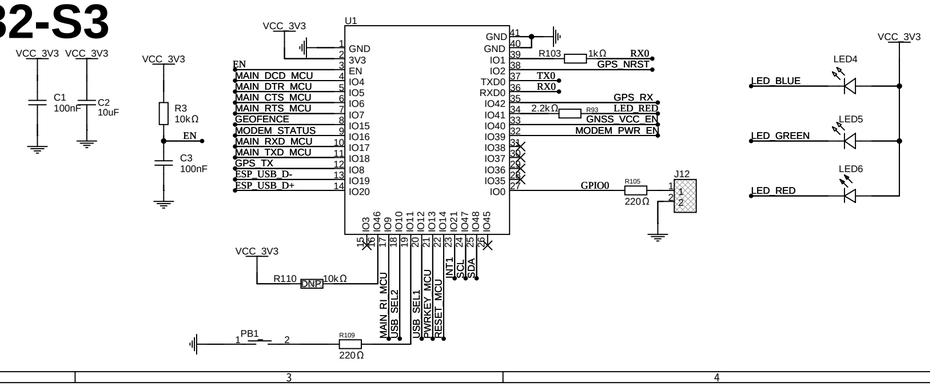

Schematic	ESPNetLink	Update Date	
Page		Create Date	
Drawn		Part Number	
Reviewed			
	VER	SIZE	PAGE 1 OF 1
MeatPi electronics www.meatpi.com	V1.60		MeatPi Electronics