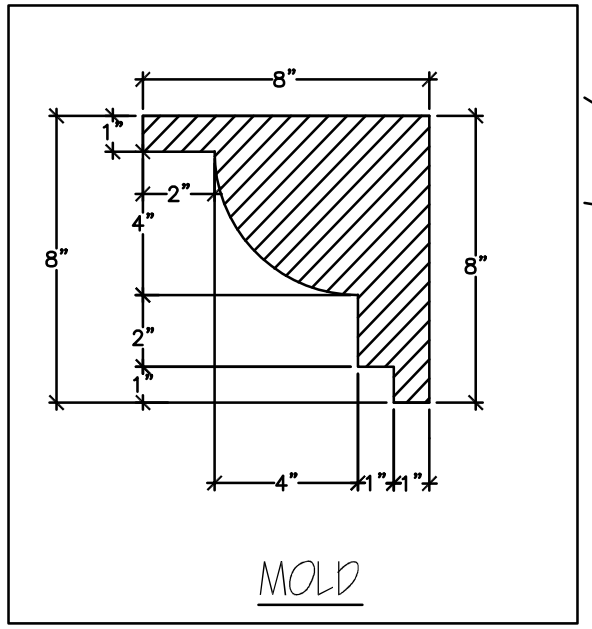

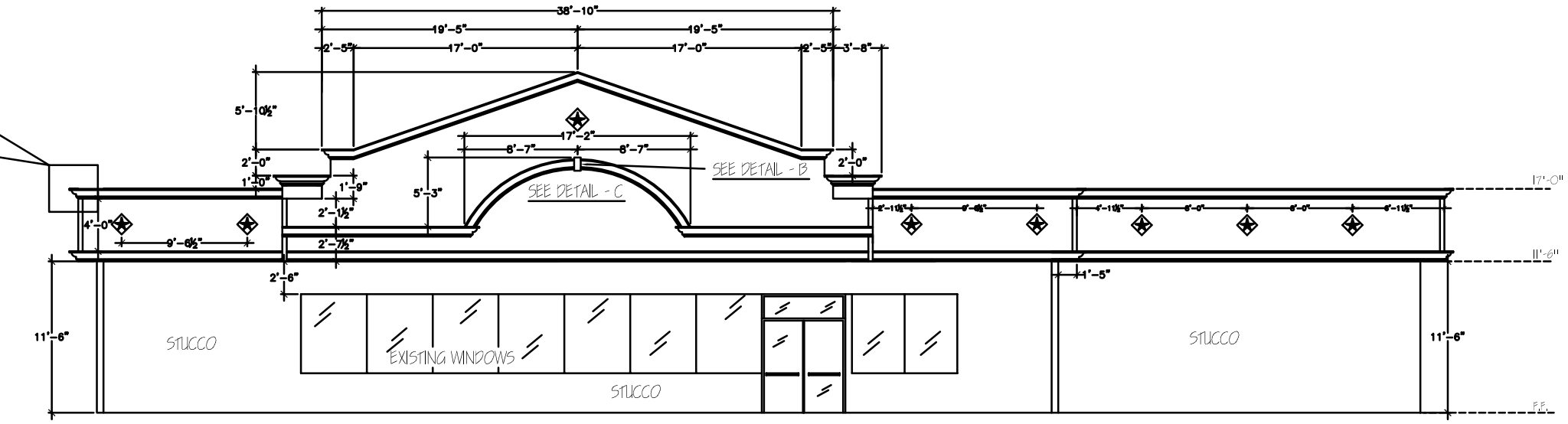

FRONT ELEVATION

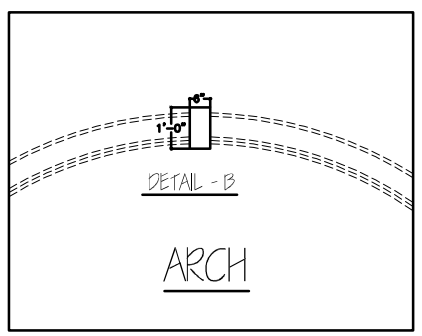

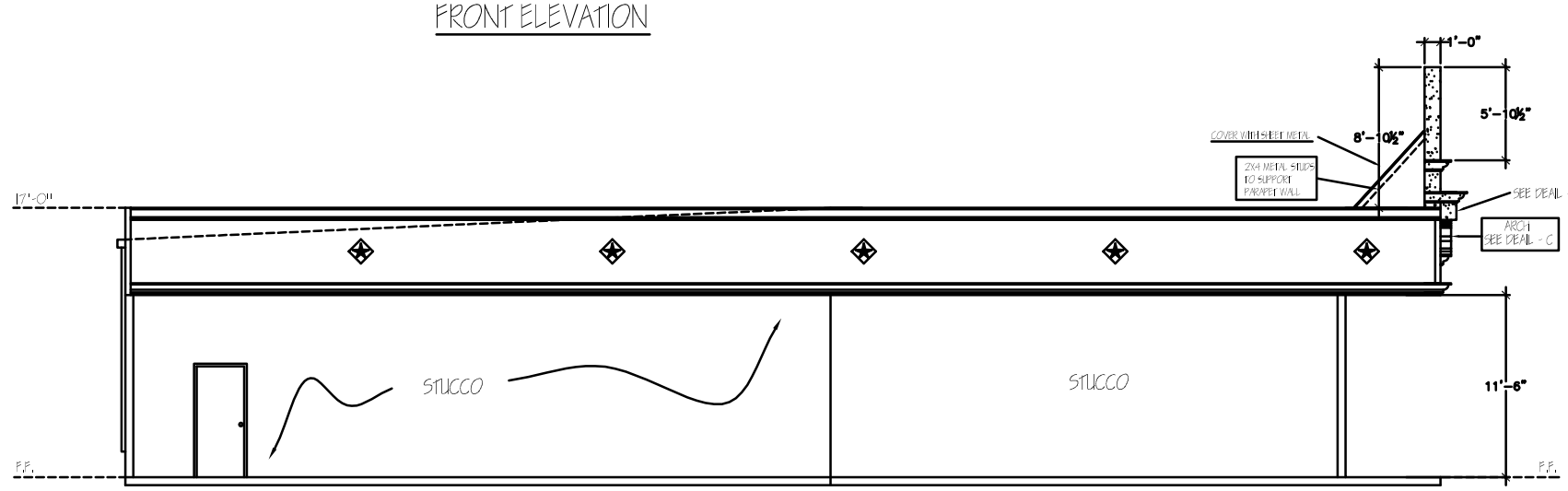

RIGHT ELEVATION

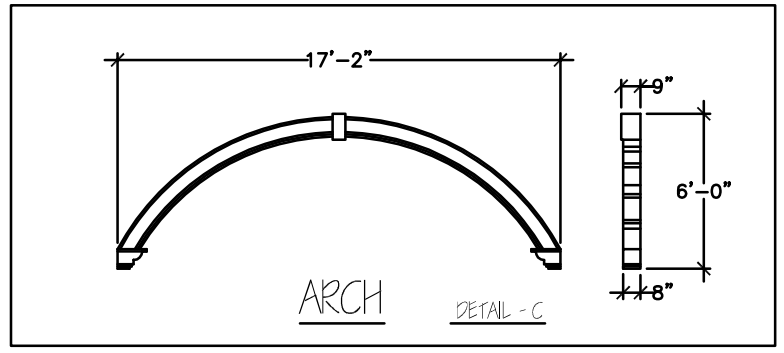

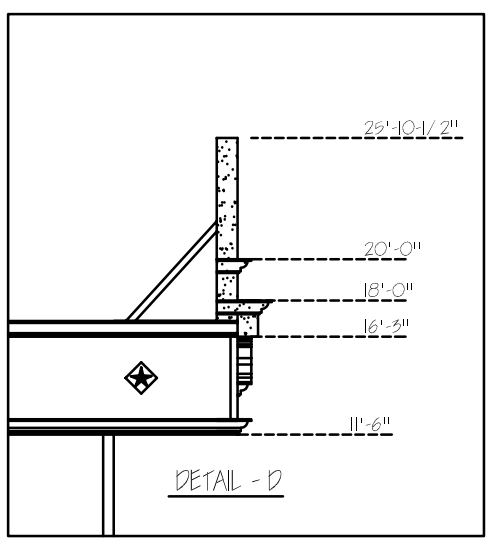

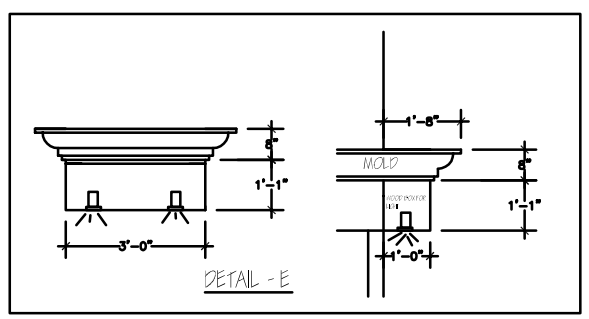

Notes:

Detail shows the installation of Sto Powerwall® Stucco over a steel frame wall in two coats. Installation at 1/2" (13 mm) thickness may be done in one coat.

Sto materials:

1) Sto Powerwall® scratch coat
2) Sto Powerwall® brown coat
3) Sto primer
4) Sto finish

Accessory materials including means for fastening:

1) Moisture barrier*
2) Expanded metal lath
3) Casing bead
4) Other accessories as may be required (e.g. weep creeds, etc.)

* Building codes vary with respect to the type of moisture barrier required and the number of layers. For example, the Uniform Building Code (UBC) requires two layers of Type 1 Grade D building paper over wood-based sheathings. Check the applicable code and code compliance report for the appropriate type.

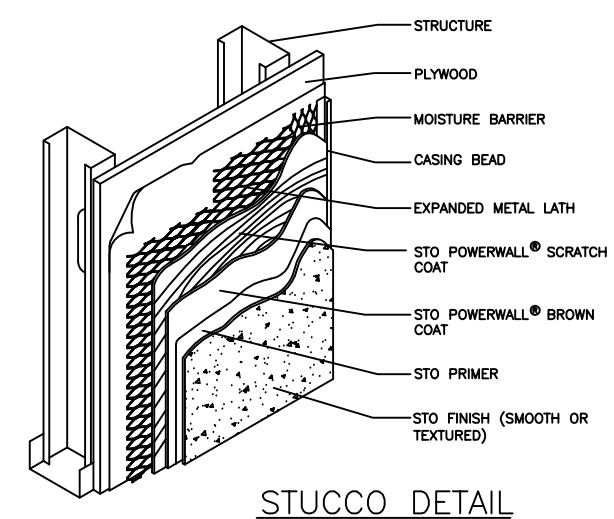

STUCCO DETAIL

ELEVATION PLAN DETAILS

3/16"=1'-0"

eclipse
DESIGN AND CONSTRUCTION
PH# 823-468-3126 FAX# 281-631-9359

ELEVATION DESIGN FOR EXISTING BUILDING LOCATED AT

801 SOUTH MAIN
ANAHUAC TX 77514

05/28/05	DATE
M.A.	CHECK BY
M.A.	DRAWN BY
3/16"=1'-0"	SCALE
0417	PRO. NO.

SHEET: A-2