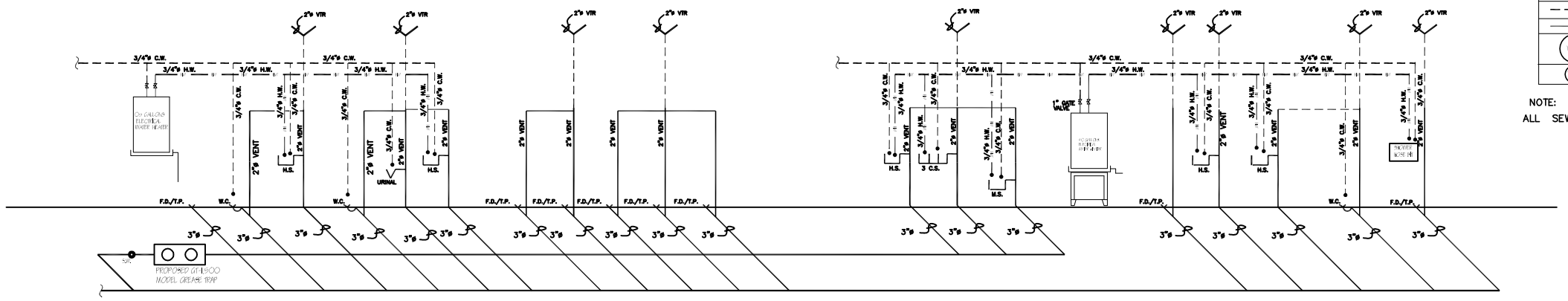

PLUMBING DIAGRAM

SYMBOL LEGEND

— — — —	COLD WATER
—— H ——	HOT WATER
WH	WATER HEATER
WM	WATER METER

NOTE:
ALL SEWER LINES SHALL BE PVC. SCHED. 40

GENERAL PLUMBING NOTES:

1. ALL PLUMBING WORK SHALL COMPLY WITH LOCAL AND STATE PLUMBING AND HEALTH CODES.

2. PER THE ADMINISTRATIVE PROCEDURE AND TEXAS REGISTER ACT, (APTRA), ARTICLE 6252-13a, SECTION 5.01,252, DESIGN STANDARDS.
(a) A PERSON MAY NOT SELL, OFFER FOR SALE, DISTRIBUTE, OR IMPORT INTO THIS STATE A PLUMBING FIXTURE FOR USE IN THIS STATE UNLESS THE PLUMBING FIXTURE MEETS THE WATER SAVING PERFORMANCE STANDARDS PROVIDED BY SUBSECTION (b) OF THIS SECTION AND THE PLUMBING FIXTURE IS LISTED SECTION 5.02,253 OF THIS TABLE (RELATED TO PLUMBING FIXTURE USE).
(b) THE WATER SAVING PERFORMANCE STANDARDS FOR A PLUMBING FIXTURE THOSE ESTABLISHED BY THE AMERICAN NATIONAL STANDARDS INSTITUTE UNDER CURRENT REVISION, OR THE FOLLOWING STANDARDS, WHICH EVER ARE THE MORE RESTRICTIVE.
THE MAXIMUM FLOW OF WATER USING ANSI TESTING PROCEDURES:
(1) SINK OR LAVATORY FAUCET OR A FAUCET AERATOR - 2.2 GAL./ MIN. @ 60 PSI
(2) SHOWER HEAD 2.75 GAL./ MIN. @ 80 PSI
THE MAXIMUM VOLUME OF WATER PER FLUSH USING ANSI TESTING PROCEDURES:
(3) URINAL AND ASSOCIATED FLUSH VALVE - 1.00 GAL./ FLUSH
(4) TANK TYPE WATER CLOSET - 1.60 GAL./ FLUSH
(5) WATER CLOSET THAT EMPLOYS A FLUSH OMETER - 2.00 GAL./ FLUSH
(6) ALL DRINKING FOUTAINS SHALL BE OPERATED BY A SELF CLOSING VALVE.

3. COORDINATE PLUMBING PLAN WITH ARCHITECTURAL, STRUCTURAL, MECHANICAL, ELECTRICAL AND SITE PLANS.

4. PROVIDE UNIONS AT WATER HEATER AND WERE REQUIRED.

5. PROVIDE BACK FLOW PREVENTERS AT HOSE BIBS AND SINKS.

6. ALL WATER AND GAS ROUGH-INS SHALL TO BE TERMINATED WITH SHUT OFF VALVES BEFORE CONNECTION WITH EQUIPMENT AND FIXTURES.

7. PIPING:
BELOW SLAB WATER - TYPE "L" COPPER SLEEVED THROUGH SLAB
ABOVE SLAB WATER - TYPE "L" COPPER OR GALVANIZED IRON PIPE
WASTE AND VENT LINES - POLYVINYL CHLORIDE (P.V.C.) SCHEDULE 40
GAS - N/A

8. WATER SUPPLIES TO EACH FIXTURE SHALL BE PROVIDED WITH AIR CHAMBERS OF SUFFICIENT SIZE TO PREVENT WATER HAMMER.

9. PLUMBING CONTRACTOR SHALL PAY ALL FEES, COST OF PERMITS AND PRO RATA COST THAT APPLIES TO THIS WORK.

10. PLUMBING CONTRACTOR SHALL INSTALL FIXTURES AND EQUIPMENT PROVIDED BY THE OWNER FOR THIS PROJECT

11. ALL WATER LINES ABOVE FLOOR ARE TO BE INSULATED. COLD WATER LINES FOR CONDENSATION CONTROL. HOT WATER LINES TO PREVENT HEAT LOSS. PROVIDE INSULATION RINGS ON ALL RIBBERS TO PREVENT BONDING OF SLAB TO PIPE AND ALLOW MOVEMENT.

12. ALL SLEEVES PENETRATING HEATED TO NON-HEATED AREAS SHALL BE PROPERLY INSULATED AND SEALED TO PREVENT HEAT LOSS AND SEEPAGE.

13. PURGE ALL WATER BEFORE CONNECTION.

SANITARY SEWER NOTE:

ALL OPEN PIPING SHALL BE CAPPED OR PLUGGED TO PREVENT ENTRY OF FOREIGN MATERIAL DURING THE CONSTRUCTION PERIOD.

PIPING SHALL NOT CONTACT ELECTRICAL CONDUIT AT ANY POINT OR INDIRECTLY THROUGH PIPE SUPORTS.

BEFORE FINAL ACCEPTANCE, PLUMBING SUBCONTRACTOR SHALL BE REQUIRED TO OPERATE THE SISTEM FOR RASONABLE PERIOD OF TIME TO VERIFY PERFORMANCE, THE SYSTEM AND FIXTURES SHALL BE THOROUGHLY CLEANED BEFORE FINAL ACEPTANCE BY OWNER. THE SYSTEM SHALL BE TESTED AND IN WORKING ORDER AND SHALL FURNISH ALL TESTS THAT MAY BE REQUIRED TO DEMOSTRATE THE EFFICIENCY OF THE SYSTEM AND FIXTURES

NOTE: VACUME BREAVER DEVICES SHOULD BE USED @ ALL POTABLE WATER.
ALSO ALL AIR GAPS SHOULD BE MAINTAINED.

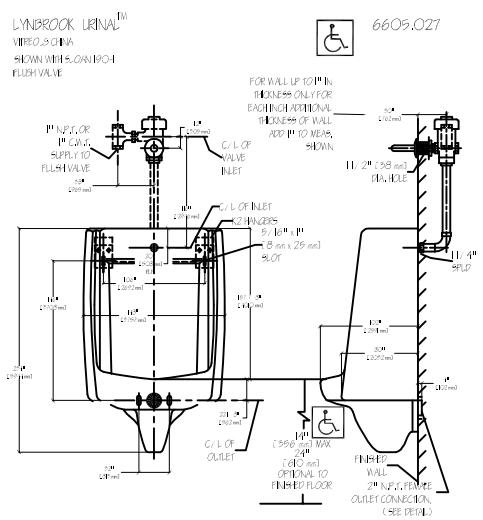

NOTES:
FLUSH VALVE NOT INCLUDED WITH FIXTURE AND MUST BE ORDERED SEPARATELY.
PROVIDE SURFACE REINFORCEMENT FOR ALL WALL SUPPORTS.

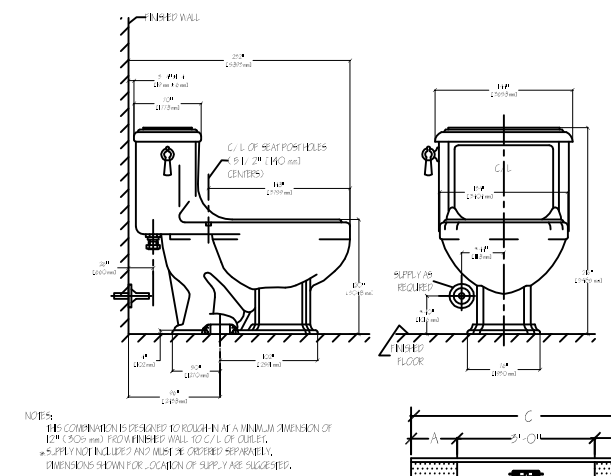

NOTES:
THE COMPARTMENTS DESIGNED TO ROUGH IN AT A MINIMUM DIMENSION OF 12" (305 mm) FROM FINISHED WALL TO C/L OF OUTLET.
SUPPLY PIPING NOT INCLUDED AND MUST BE ORDERED SEPARATELY.
DIMENSIONS SHOWN FOR LOCATION OF SUPPLY ARE SUGGESTED.

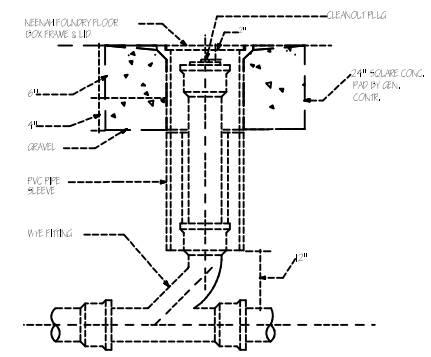

OUTDOOR CLEANOUT DETAIL

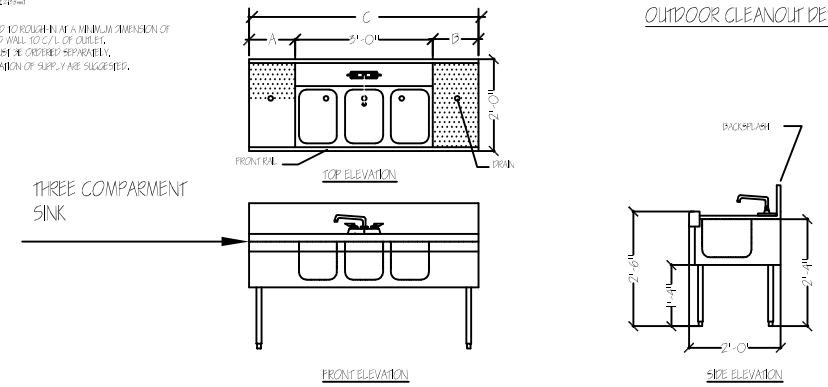

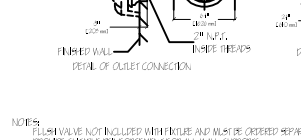

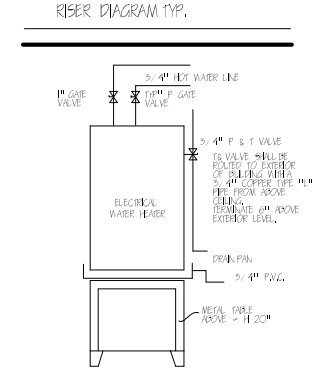

WATER HEATER DETAIL

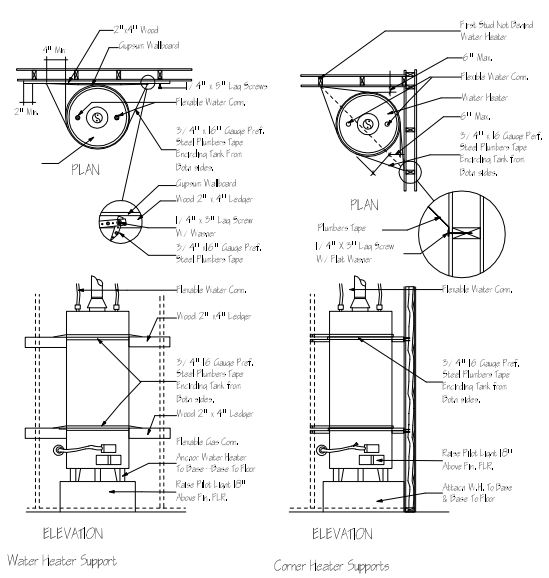

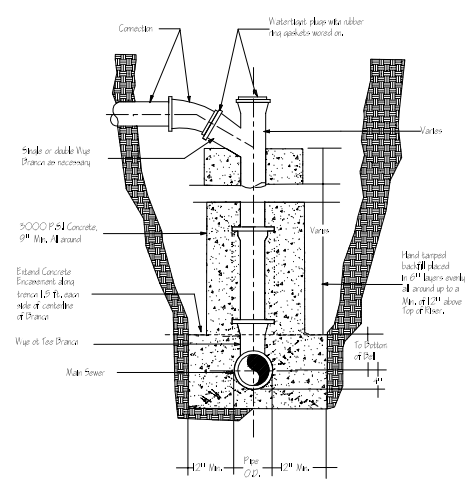

SERVICE CONNECTION RISER

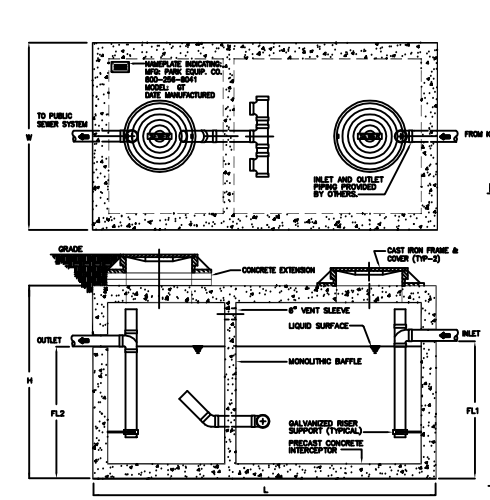

© Park 2002

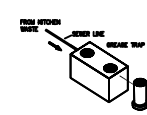

Typical applications include commercial and industrial food service kitchens where excessive grease may interfere with the proper drainage of the sewer system. The grease interceptor is generally buried below ground level to gravity flow sewer systems. A sample well is utilized on the outlet side for sampling by the local sewer authority.

Specifications

CONCRETE : Class 1 concrete with design strength of 4000 PSI at 28 days. Unit is of monolithic construction at floor, first stage of wall and baffle with sectional riser to required depth. (Monolithic baffle required, slide-in type is not acceptable)

REINFORCEMENT: Grade 60 reinforced with steel rebar conforming to ASTM A615 on required centers or equal.

C.I. CASTINGS: Manhole frames, covers or grates are manufactured of grey cast iron conforming to ASTM A48-76 Class 30. Manhole shall be nominal 24 inch diameter and be traffic duty.

GREASE INTERCEPTOR SCHEDULE									
MODEL NO.	CAPACITY USGal	GREASE CAP. (LBS)	EMPTY WT (LBS)	LENGTH L	WIDTH W	HEIGHT H	INLET FL1	OUTLET FL2
GT-500	500	1,200	7,000	7'-10"	4'-6"	4'-6"	3'-3"	3'-3"
GT-750	750	1,700	11,000	7'-10"	5'-6"	5'-0"	3'-6"	3'-3"
GT-1000	1,000	2,300	13,500	8'-6"	5'-6"	5'-0"	3'-6"	3'-3"
GT-1250	1,250	2,800	15,500	9'-6"	5'-6"	5'-0"	3'-6"	3'-3"
GT-1500	1,500	3,500	18,000	10'-2"	5'-6"	5'-0"	3'-6"	3'-3"
GT-2000	2,000	4,600	24,000	12'-0"	7'-0"	5'-10"	4'-0"	3'-9"
GT-2500	2,500	5,700	27,000	13'-0"	7'-0"	7'-0"	5'-9"	5'-6"
GT-3000	3,000	6,800	30,000	13'-0"	7'-0"	6'-0"	6'-0"	5'-6"
GT-3500	3,500	8,000	31,000	13'-0"	7'-0"	6'-0"	7'-1"	6'-10"
GT-4000	4,000	9,300	38,000	16'-0"	6'-6"	7'-0"	6'-9"	6'-6"

ORDER SIZES ARE AVAILABLE. CONTACT US FOR MORE INFORMATION

Engineering Data

The grease interceptor is structurally & hydraulically engineered to conform to national plumbing codes recommended & most cities. Consult with local authorities for specific application requirements.

Shop drawings shall include complete structural & bouyancy calculations certified by a licensed professional engineer.

Consult with Park Equipment Company for exact excavation dimensions & shipping information.

GREASE INTERCEPTOR SERIES GT
500 THRU 4000 GALLON CAPACITY

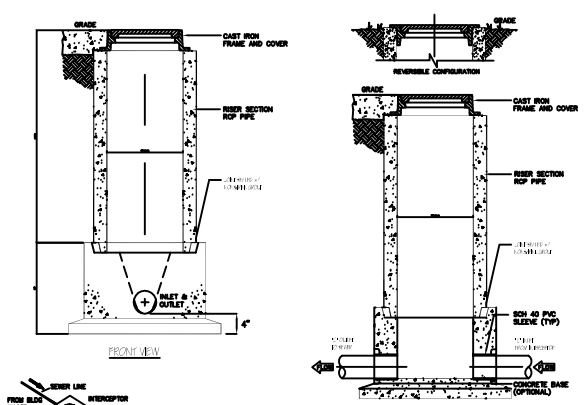

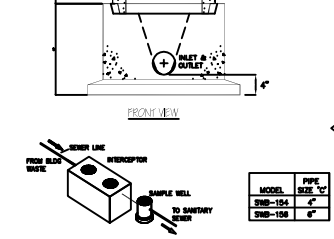

MODEL	PIPE SIZE "D"
SWB-154	4"
SWB-156	6"

NOTES
1. SAMPLING WELL MUST BE INSTALLED UNDER A SEPARATE PLUMBING PERMIT.
2. USE 15" T&G R.C.P. FOR INSTALLATION FOR INSTALLATION 6'-0" DEEP AND LESS.
3. USE 24" T&G R.C.P. FOR INSTALLATION GREATER THAN 6'-0" DEEP. (STD RING AND M.H. COVER REQUIRED)
4. SAMPLING WELL MUST BE SET IN A CIRCULAR OR SQUARE CONCRETE PAD (1'-0" GREATER THAN OUTSIDE DIAMETER OF PIPE.)
5. INSIDE INSTALLATION NOT PERMITTED, WHERE OUTSIDE INSTALLATION IS POSSIBLE.
6. INSTALLATION INSIDE BLDG MUST BE POURED IN PLACE (15"MIN) NO CONCRETE PIPE IS PERMITTED, (AIR-TIGHT COVER REQUIRED.)
7. LAWN INSTALLATION MUST BE 4" ABOVE FINISHED GRADE.
8. DRIVE & SIDEWALK INSTALLATION MUST BE BROUGHT TO FINISHED GRADE
9. TO BE INSTALLED ON PRIVATE PROPERTY, IN AN ACCESSIBLE LOCATION TO CITY PERSONNEL.

SPECIFICATIONS

CONCRETE : Class 1 concrete with of design strength of 4500 PSI at 28 days. Unit is of monolithic construction at floor and first stage of wall with sectional riser to required depth.

C.I. CASTINGS: Cast iron frames and grates are manufactured of grey cast iron conforming to ASTM A48-76 Class 30, Heavy-Duty AASHTO H-20

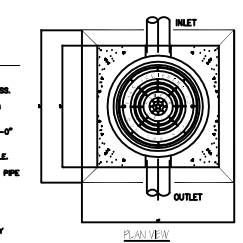

SAMPLE WELL BASIN

PLUMBING PLAN
1/8"=1'-0"

eclipse
DESIGN AND CONSTRUCTION
FAX 832-428-7425 PH. 281-474-9959

PLUMBING PLAN FOR A BUILDING
LOCATED AT
801 SOUTH MAIN
ANAHUAC TX. 77514

05/28/05	DATE
M.A.	CHECK BY
M.A.	DRAWN BY
1/8"=1'-0"	SCALE
0417	PRO. NO.

SHEET: P-2