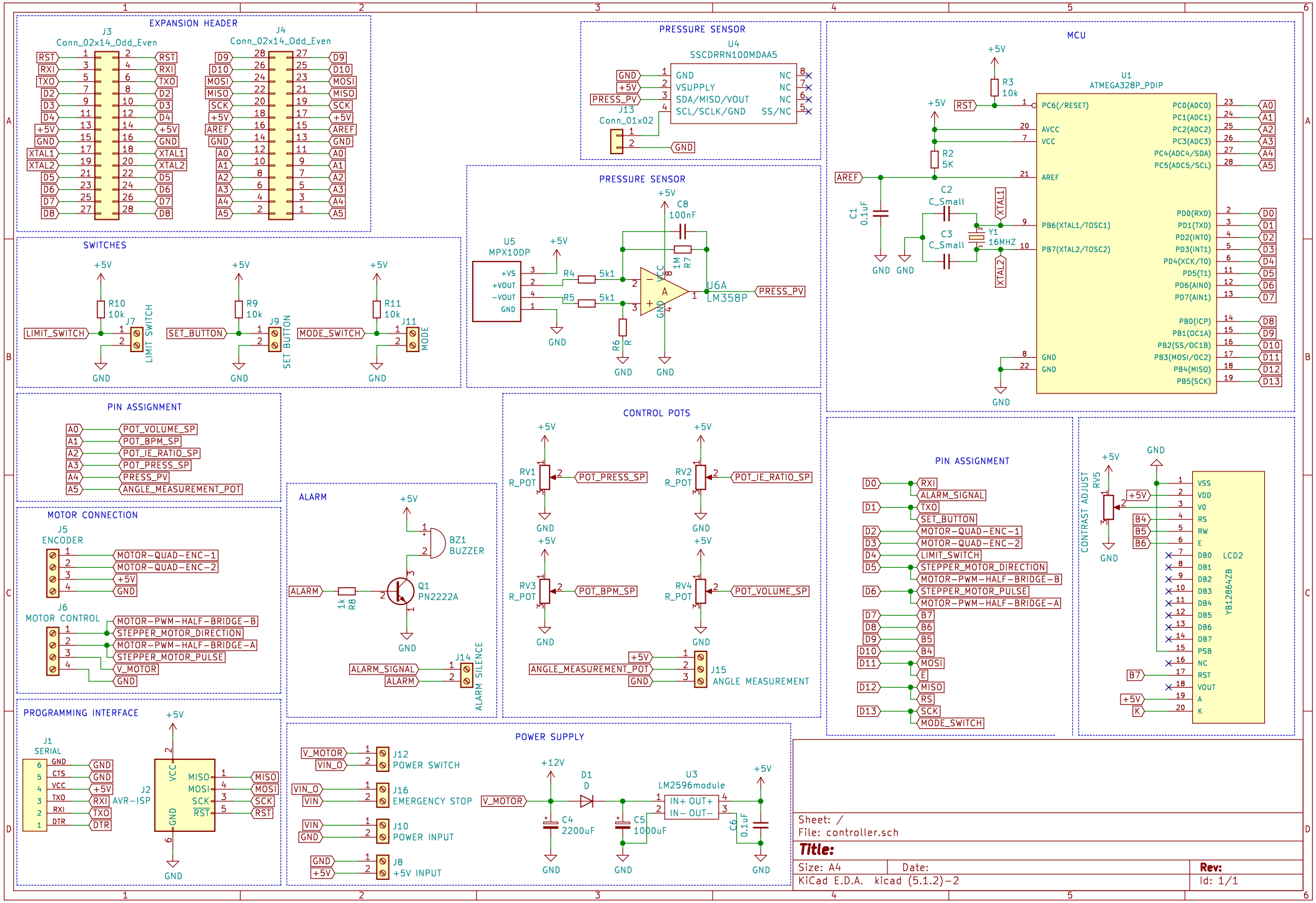
EXPANSION HEADER
J3
Conn_02x14_Odd_Even
J4
Conn_02x14_Odd_Even
PRESSURE SENSOR
U4
SSCDRRN100MDAA5
GND
VSUPPLY
SDA/MISO/VOUT
SCL/SCLK/GND
NC
SS/NC
PRESS_PV
J13
Conn_01x02
MCU
U1
ATMEGA328P_PDIP
PC6(/RESET)
AVCC
VCC
AREF
PB6(XTAL1/TOSC1)
PB7(XTAL2/TOSC2)
PC0(ADC0)
PC1(ADC1)
PC2(ADC2)
PC3(ADC3)
PC4(ADC4/SDA)
PC5(ADC5/SCL)
PD0(RXD)
PD1(TXD)
PD2(INT0)
PD3(INT1)
PD4(XCK/T0)
PD5(T1)
PD6(AIN0)
PD7(AIN1)
PB0(ICP)
PB1(OC1A)
PB2(SS/OC1B)
PB3(MOSI/OC2)
PB4(MISO)
PB5(SCK)
R3
10k
R2
5K
C1
0.1uF
C2
C_Small
C3
C_Small
Y1
16MHZ
XTAL1
XTAL2
SWITCHES
R10
10k
J7
LIMIT SWITCH
LIMIT_SWITCH
R9
10k
J9
SET BUTTON
SET_BUTTON
R11
10k
J11
MODE
MODE_SWITCH
PRESSURE SENSOR
U5
MPX10DP
+VS
+VOUT
-VOUT
GND
R4
5k1
R5
5k1
C8
100nF
R7
1M
R6
R
U6A
LM358P
PRESS_PV
PIN ASSIGNMENT
A0
A1
A2
A3
A4
A5
POT_VOLUME_SP
POT_BPM_SP
POT_IE_RATIO_SP
POT_PRESS_SP
PRESS_PV
ANGLE_MEASUREMENT_POT
MOTOR CONNECTION
J5
ENCODER
MOTOR-QUAD-ENC-1
MOTOR-QUAD-ENC-2
+5V
GND
J6
MOTOR CONTROL
MOTOR-PWM-HALF-BRIDGE-B
STEPPER_MOTOR_DIRECTION
MOTOR-PWM-HALF-BRIDGE-A
STEPPER_MOTOR_PULSE
V_MOTOR
ALARM
BZ1
BUZZER
Q1
PN2222A
1k
R8
ALARM_SIGNAL
J14
ALARM SILENCE
CONTROL POTS
RV1
R_POT
POT_PRESS_SP
RV2
R_POT
POT_IE_RATIO_SP
RV3
R_POT
POT_BPM_SP
RV4
R_POT
POT_VOLUME_SP
ANGLE_MEASUREMENT_POT
J15
ANGLE MEASUREMENT
PIN ASSIGNMENT
D0
RXI
ALARM_SIGNAL
D1
TXO
SET_BUTTON
D2
MOTOR-QUAD-ENC-1
D3
MOTOR-QUAD-ENC-2
D4
LIMIT_SWITCH
D5
STEPPER_MOTOR_DIRECTION
MOTOR-PWM-HALF-BRIDGE-B
D6
STEPPER_MOTOR_PULSE
MOTOR-PWM-HALF-BRIDGE-A
D7
B7
D8
B6
D9
B5
D10
B4
D11
MOSI
E
D12
MISO
RS
D13
SCK
MODE_SWITCH
CONTRAST ADJUST
RV5
LCD2
YB12864ZB
VSS
VDD
V0
RS
RW
E
DB0
DB1
DB2
DB3
DB4
DB5
DB6
DB7
PSB
NC
RST
VOUT
A
K
PROGRAMMING INTERFACE
J1
SERIAL
GND
CTS
VCC
TXO
RXI
DTR
J2
AVR-ISP
MISO
MOSI
SCK
RST
POWER SUPPLY
V_MOTOR
VIN_O
J12
POWER SWITCH
VIN
J16
EMERGENCY STOP
J10
POWER INPUT
J8
+5V INPUT
+12V
D1
D
C4
2200uF
C5
1000uF
U3
LM2596module
IN+ OUT+
IN- OUT-
C6
0.1uF
Sheet: /
File: controller.sch
Title:
Size: A4
Date:
Rev:
KiCad E.D.A. kicad (5.1.2)-2
Id: 1/1