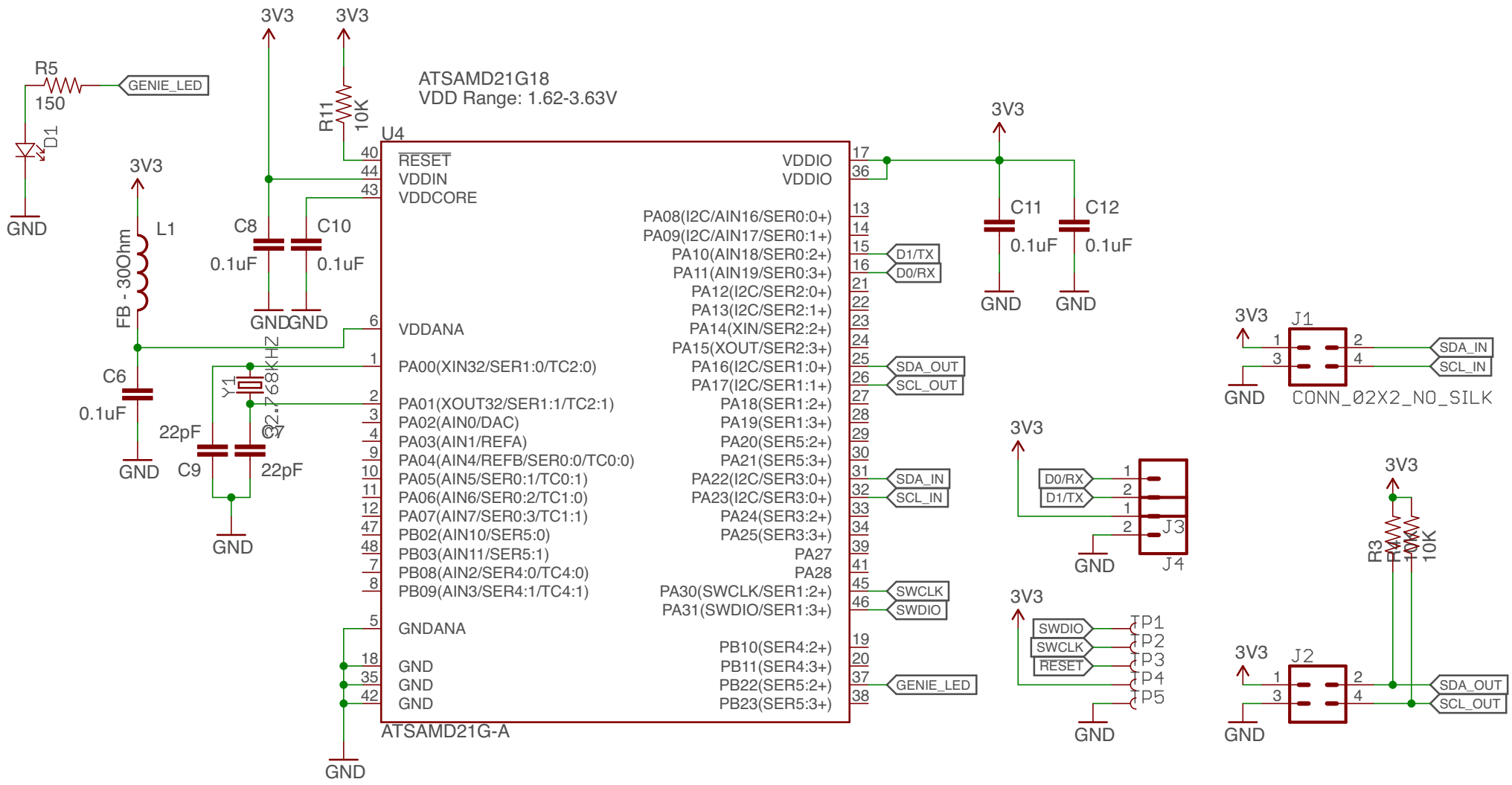
ATSAMD21G18
VDD Range: 1.62-3.63V
U4
ATSAMD21G-A
RESET
VDDIN
VDDCORE
VDDANA
PA00(XIN32/SER1:0/TC2:0)
PA01(XOUT32/SER1:1/TC2:1)
PA02(AIN0/DAC)
PA03(AIN1/REFA)
PA04(AIN4/REFB/SER0:0/TC0:0)
PA05(AIN5/SER0:1/TC0:1)
PA06(AIN6/SER0:2/TC1:0)
PA07(AIN7/SER0:3/TC1:1)
PB02(AIN10/SER5:0)
PB03(AIN11/SER5:1)
PB08(AIN2/SER4:0/TC4:0)
PB09(AIN3/SER4:1/TC4:1)
GNDANA
GND
GND
GND
VDDIO
VDDIO
PA08(I2C/AIN16/SER0:0+)
PA09(I2C/AIN17/SER0:1+)
PA10(AIN18/SER0:2+)
PA11(AIN19/SER0:3+)
PA12(I2C/SER2:0+)
PA13(I2C/SER2:1+)
PA14(XIN/SER2:2+)
PA15(XOUT/SER2:3+)
PA16(I2C/SER1:0+)
PA17(I2C/SER1:1+)
PA18(SER1:2+)
PA19(SER1:3+)
PA20(SER5:2+)
PA21(SER5:3+)
PA22(I2C/SER3:0+)
PA23(I2C/SER3:0+)
PA24(SER3:2+)
PA25(SER3:3+)
PA27
PA28
PA30(SWCLK/SER1:2+)
PA31(SWDIO/SER1:3+)
PB10(SER4:2+)
PB11(SER4:3+)
PB22(SER5:2+)
PB23(SER5:3+)
D1/TX
D0/RX
SDA_OUT
SCL_OUT
SDA_IN
SCL_IN
SWCLK
SWDIO
GENIE_LED
R5
150
GENIE_LED
D1
GND
3V3
3V3
R11
10K
3V3
L1
FB - 30Ohm
C8
0.1uF
C10
0.1uF
GND
GND
C6
0.1uF
GND
Y1
32.768KHZ
22pF
C9
C7
22pF
GND
3V3
C11
0.1uF
C12
0.1uF
GND
GND
3V3
J1
CONN_02X2_NO_SILK
SDA_IN
SCL_IN
GND
3V3
D0/RX
D1/TX
J3
J4
GND
3V3
SWDIO
SWCLK
RESET
TP1
TP2
TP3
TP4
TP5
GND
3V3
R3
10K
R4
10K
3V3
J2
SDA_OUT
SCL_OUT
GND