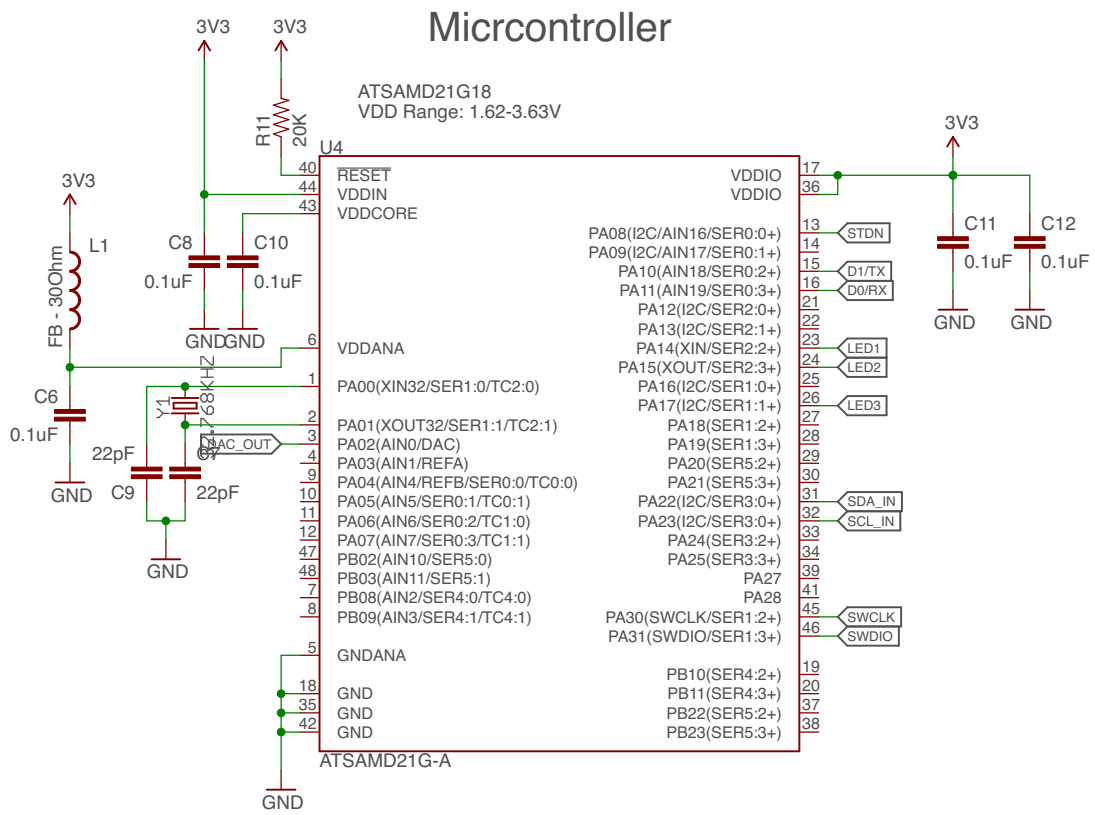

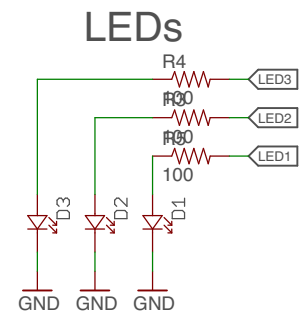

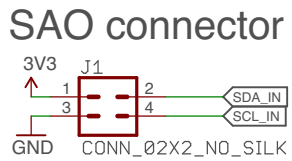

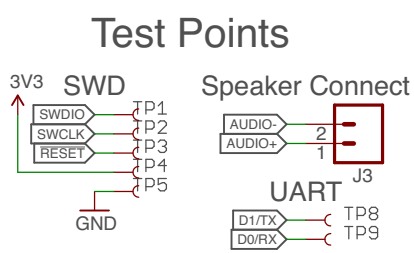

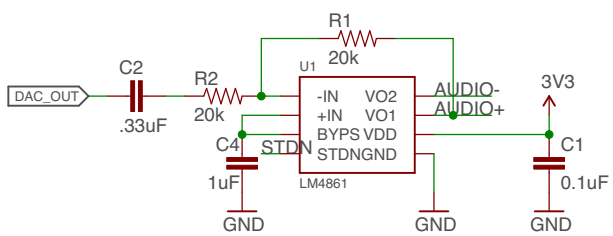

COMPANY:	
PROJECT: DC27 crAPU Add-ons	
TITLE: scaremin	
Design by: rehr (@mediumrehr)	REV: v1.0
Date: 4/27/19 8:09 PM	Sheet: 1/1