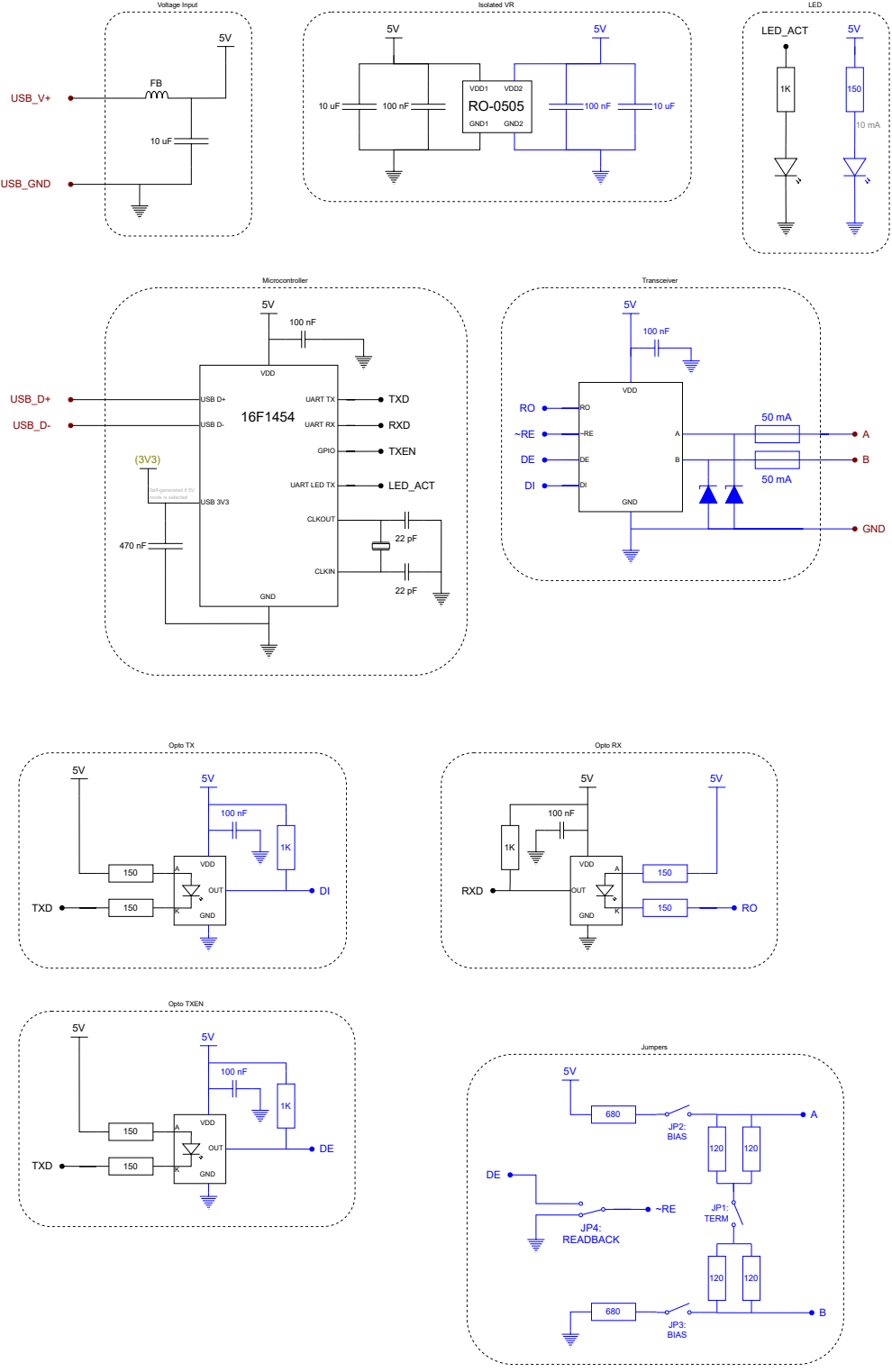
Voltage Input
5V
FB
USB_V+
10 uF
USB_GND
Isolated VR
5V
10 uF
100 nF
VDD1
VDD2
RO-0505
GND1
GND2
5V
100 nF
10 uF
LED
LED_ACT
5V
1K
150
10 mA
Microcontroller
5V
100 nF
VDD
USB_D+
USB_D-
USB D+
USB D-
16F1454
UART TX
UART RX
GPIO
UART LED TX
CLKOUT
CLKIN
TXD
RXD
TXEN
LED_ACT
(3V3)
Self-generated if 5V mode is selected
USB 3V3
470 nF
22 pF
22 pF
GND
Transceiver
5V
100 nF
VDD
RO
~RE
DE
DI
RO
~RE
DE
DI
A
B
GND
50 mA
50 mA
A
B
GND
Opto TX
5V
5V
100 nF
1K
150
150
VDD
A
OUT
K
GND
TXD
DI
Opto RX
5V
5V
100 nF
1K
150
150
VDD
A
OUT
K
GND
RXD
RO
Opto TXEN
5V
5V
100 nF
1K
150
150
VDD
A
OUT
K
GND
TXD
DE
Jumpers
5V
680
JP2:
BIAS
A
120
120
DE
~RE
JP4:
READBACK
JP1:
TERM
120
120
680
JP3:
BIAS
B