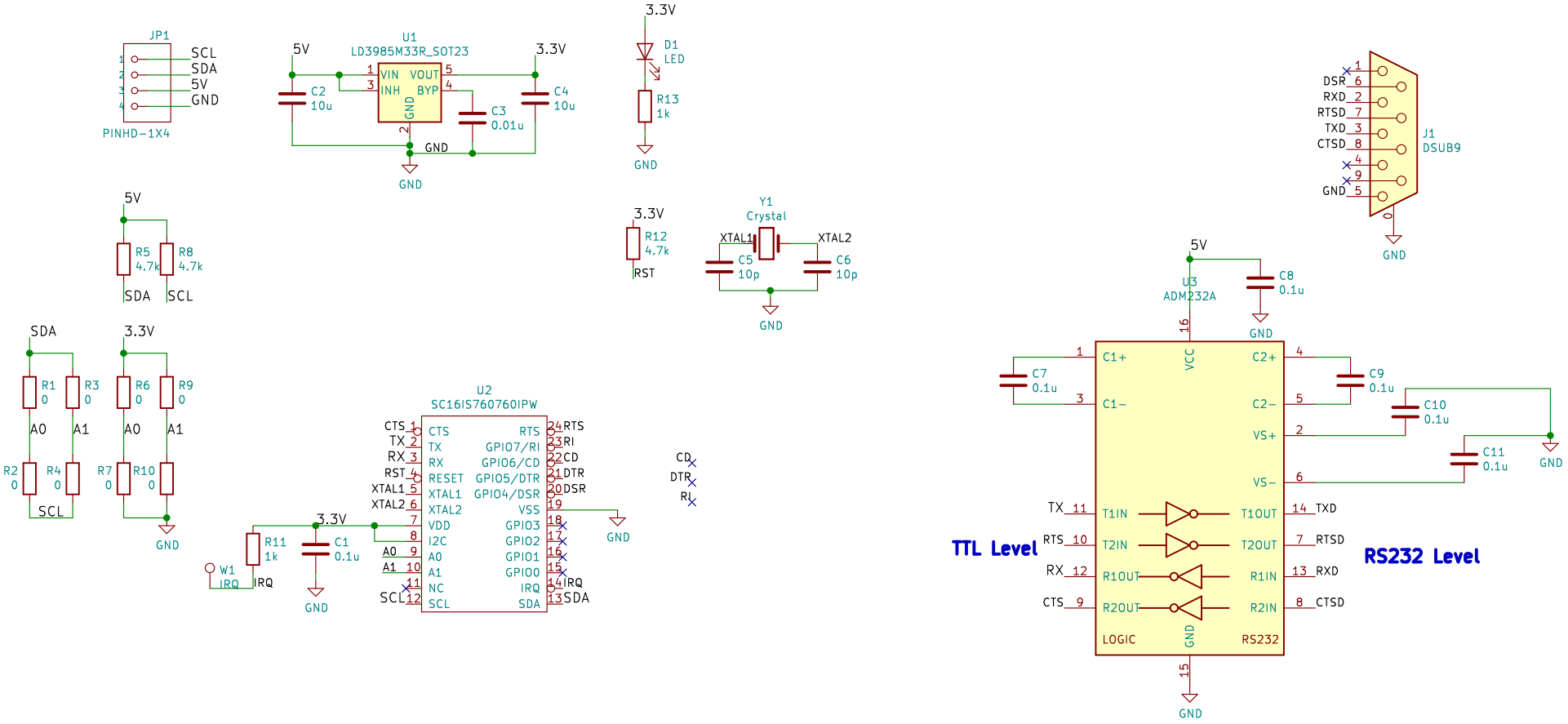

Crescent

Sheet: /

File: IR.sch

Title: I2C RS232C Converter

Size: A4	Date: 2023-02-03	**Rev: v1.2**
KiCad E.D.A. kicad (5.1.2)-1		Id: 1/1