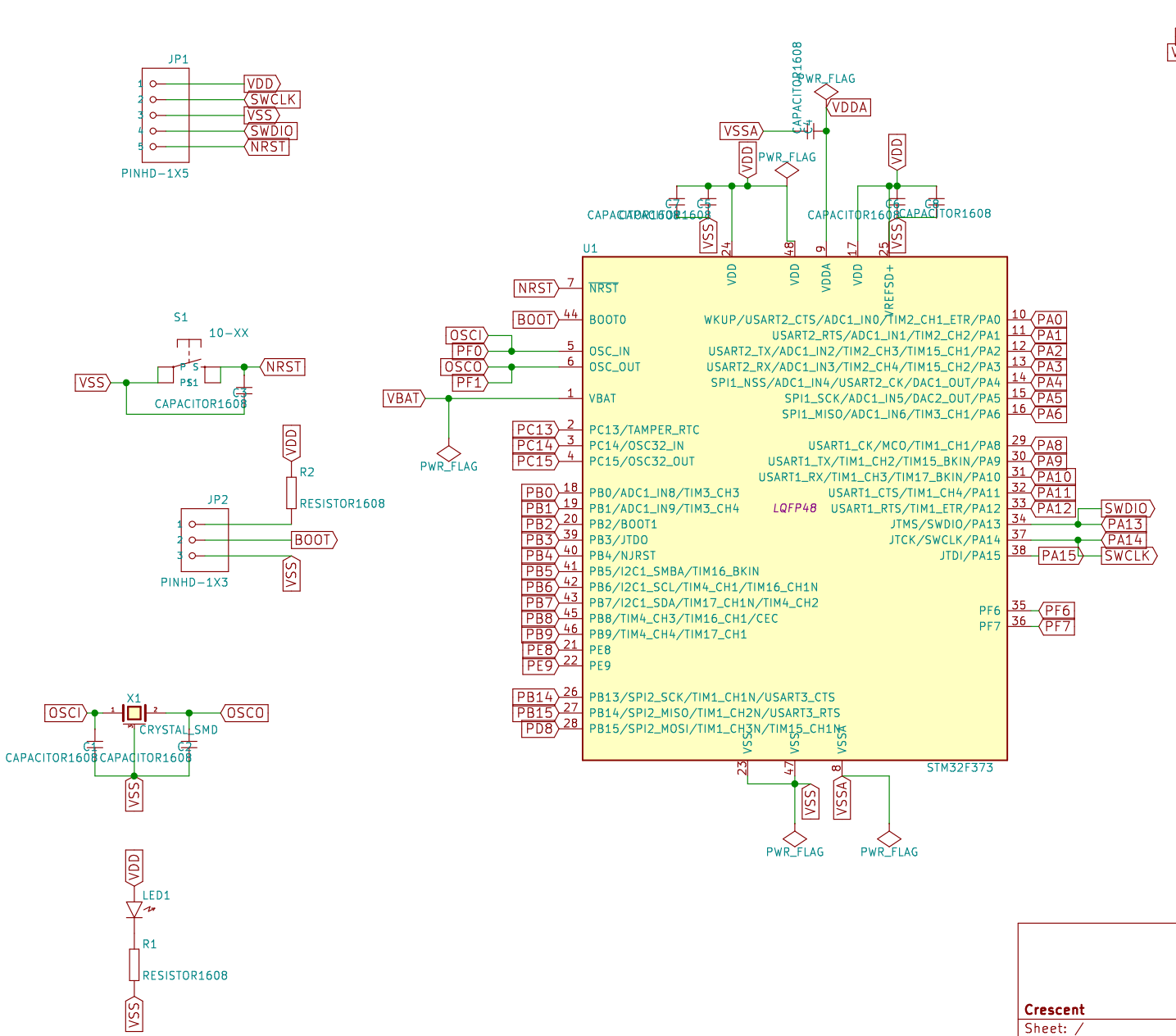

Crescent

Sheet: /

File: STM32_LQFP48.sch

Title: STM32F373 LQFP48 -> DIP

Size: A4	Date: 2016-12-04	**Rev: v1.1**
KiCad E.D.A. kicad 4.0.1-stable		Id: 1/1