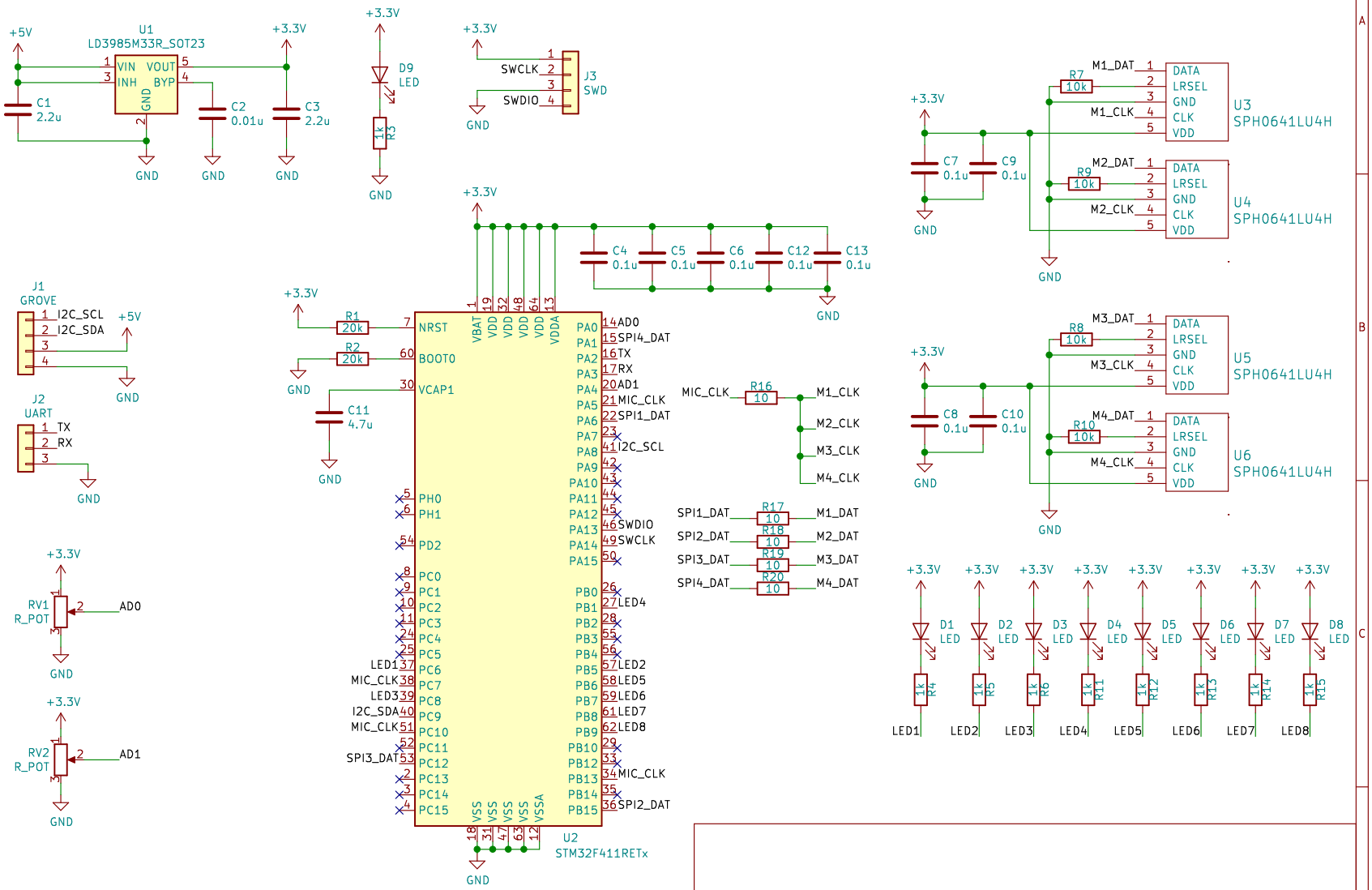

Crescent

Sheet: /

File: ssl.sch

Title: Sound Locator

Size: A4	Date: 2020-12-29	**Rev: v1.3**
KiCad E.D.A. eeschema (5.1.2)-1		Id: 1/1