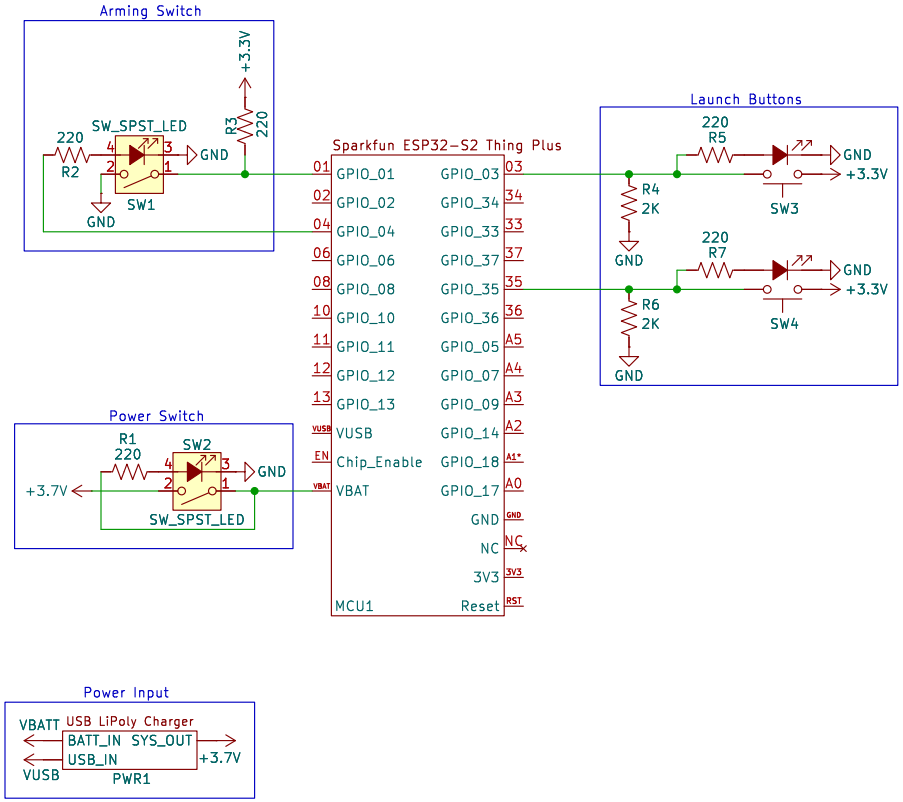

Sheet: /
File: Control_Box_KiCad.kicad_sch

Title: Wireless Rocket Ignition Control Box

Size: USLetter	Date: 2024-12-27	Rev:
KiCad E.D.A. 8.0.6		Id: 1/1