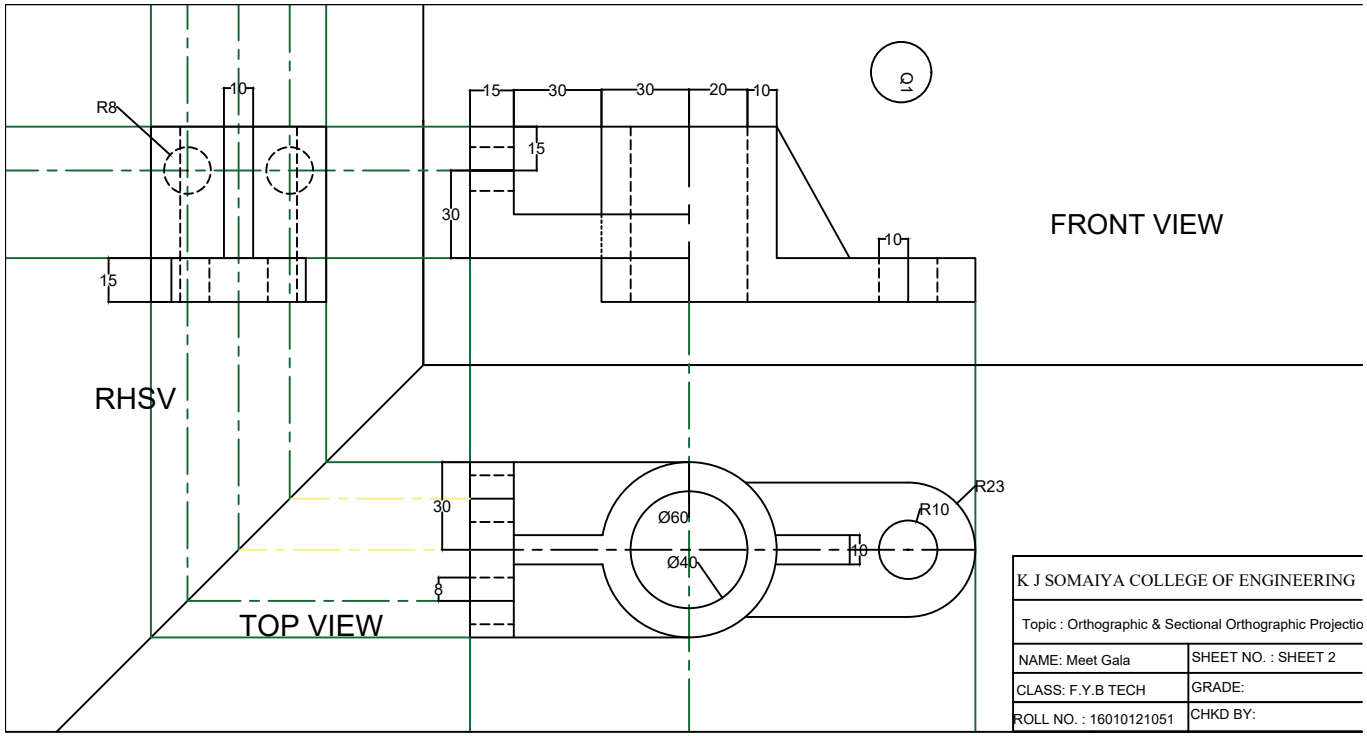

K J SOMAIYA COLLEGE OF ENGINEERING	
Topic : Orthographic & Sectional Orthographic Projectio	
NAME: Meet Gala	SHEET NO. : SHEET 2
CLASS: F.Y.B TECH	GRADE:
ROLL NO. : 16010121051	CHKD BY:

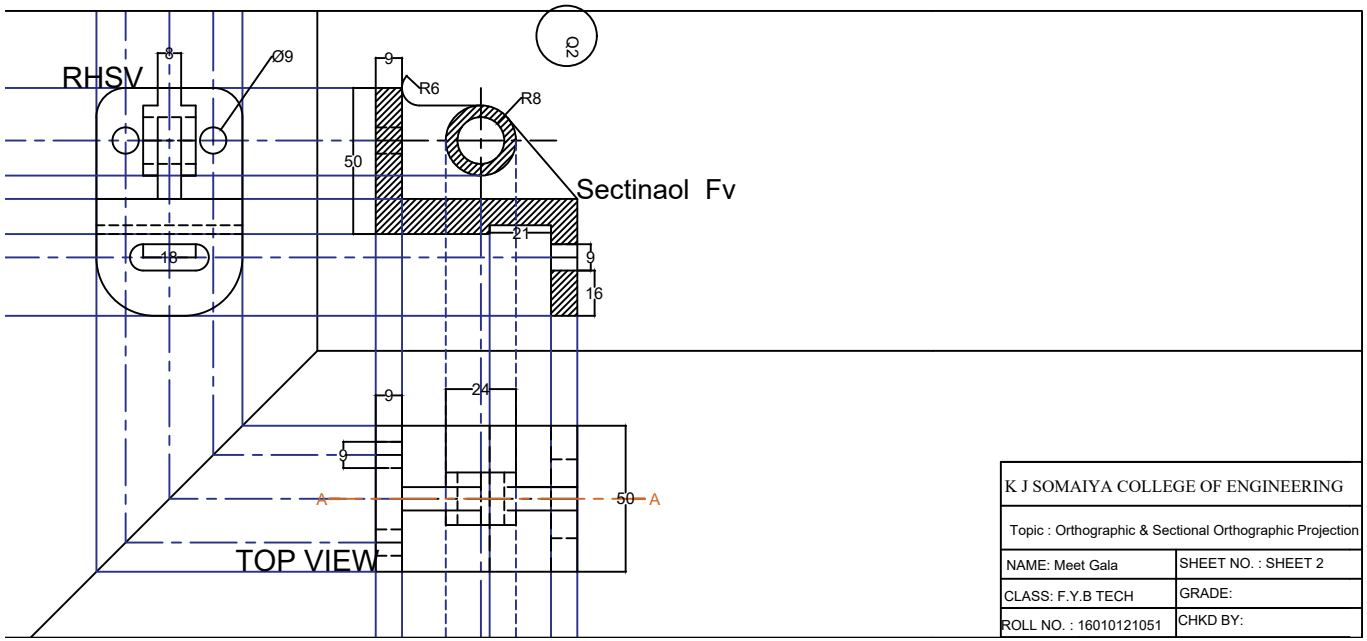

K J SOMAIYA COLLEGE OF ENGINEERING	
Topic : Orthographic & Sectional Orthographic Projection	
NAME: Meet Gala	SHEET NO. : SHEET 2
CLASS: F.Y.B TECH	GRADE:
ROLL NO. : 16010121051	CHKD BY: