MINI Series Frequency Inverter

Instruction Manual (V1.0)

Shenzhen Easydrive Inverter Technology Co. Ltd.

Addr: Guangxian gongye zone ,Bagua 3 road,Futian district,Shenzhen

Preface

----Thanks for using MINI series high performance vector control inverter manufactured by Shenzhen Easydrive Frequency Inverting Technology Co. Ltd.

------ Based on ED3100 series , MINI series inverter is a type of sensorless current vector inverter independently developed by Shenzhen Easydrive Inverter Technology Co. Ltd. On premise of enhancing stability, with functions are available, like motor constant self-identification, analog current input, switch value input, RS485 communication, practical advanced function etc. MINI provides manufacturers and ender users with highly integrated all-in-one solution. It is greatly helpful for cutting down the purchasing cost and company operation cost, and reduce the equipment size.

----- Before using Inverter, please let the users and technicians read this manual carefully to make sure correctly install and operate the inverter so that the inverter could exert its best performance. If this manual is not detailed enough description of a place can be found in our company ED3100 series manual.

-----The content of the manual could be updated without prior notice. Please follow up the new version.

To readers

This manual is suited for below readers:

---Inverter installation staff, engineer technician(electric engineer, electric operator), designers

Convention

Symbol Convention

Warning ---- Indicates precautions that if not heeded, could possibly result in medium injury or light injury.

Caution ---- Indicates precautions that if not heeded, could possibly result in loss of life or serious injury.

Chapter 1 Introduction 9
1.1 Product Confirmation 9
1.2 Safety Precautions 11
1.3 Usage precautions 14
1.4 Protection Level 15
Chapter 2 Product Specification and Order Information 16
2.1 Inverter Series Model Nos 16
2.2 Product Spec 17
2.3 Profile Size 19
2.4 The Inverter's installation environment 20
2.5 Inverter wiring Precautions 22
2.6 Basic Running Wiring Digram 22
2.7 Terminal Function description, shown as the Following: 25
2.8 Operating and using of keyboard 28

Chapter 3 Function parameter table.....33
3.1 Introduction of symbol.....33
3. 2 **Function parameter table:**.....33
Chapter 4 Parameter Function Descriptions.....54
4.1 Parameter Group -- Basic function.....54
4.2 Parameter Group—Motor and Vector Control.....66
4.3 Parameter group—Start and Stop Control.....68
4.4 Parameter Group—Display Interface.....79
4.5 Parameters Group—Input and Output.....81
4.6: analog input and output constant group.....96
4.7process PID control contant.....105
4.8 PLC operation constant group.....113
4.9 communication contant group.....123
4.10 protection constants.....126
4.11 advanced function constants.....129

Chapter 5 Troubleshooting.....134
Chapter 6 Maintenance.....139
If the inverter has the following situation, we can provide the warranty service.....139

Chapter 1 Introduction

1.1 Product Confirmation

Before open the box, please check carefully: if there's any damage or scratch during transportation, if the Rated Power on the nameplate of the unit is in agreement with your order.

If found any defective, please contact the agent or contact directly with our company.

Inverter Model Description：

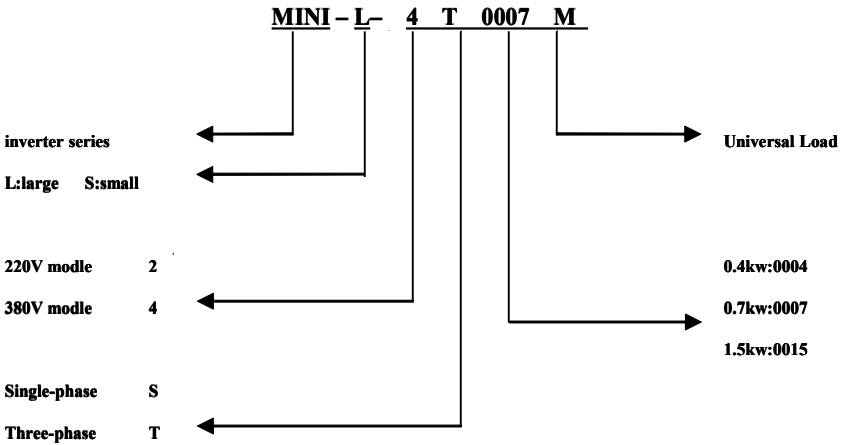

Remarks：ED3100-DC □□□□□□。

Stands for DC Buss share model

Inverter symbol description

:

On the bottom of the side panel of the inverter, there's a nameplate with Model & Rated Power attached, details as below:

Fig. 1-2 Inverter Nameplate

1.2 Safety Precautions

- **Confirmation upon delivery**

CAUTION
Never install an Inverter that is damaged or missing components Doing so can result in injury

- **Installation**

CAUTION

1. **Attach the Inverter to a metal or other noncombustible material.**
   Fire can result if the Inverter is attached to a combustible material
2. **Install a cooling fan or other cooling device when installing more than one Inverter in the same enclosure so that the temperature of the air entering the Inverter is below 40 degree.**
   Overheating can result in fires or other accidents.

- **Wiring**

WARNING

1. **Always turn OFF the input power supply before wiring terminals.。**

Otherwise, an electric shock or fire can occur

2. **Wiring must be performed by an authorized person qualified in electrical work.**

Otherwise, an electric shock or fire can occur

3. **Be sure to ground the ground terminal.**

Otherwise, an electric shock can occur.

CAUTION

1. **Check to be sure that the Voltage of the main AC power supply agree with the rated voltage of the Inverter.**

Injury or fire can occur if the voltage is not correct.

2. **Do not perform voltage withstand test on the Inverter.**

Otherwise, semiconductor elements and other devices can be damaged.

3. **Do not connect AC power to the output terminal U, V, W.**

The interior parts of the Inverter will be damaged if voltage is applied to the output terminals.

4. **Do not connect phase-shift capacitors or LC/RC noise filters to the output circuits.**The Inverter can be damaged or

internal parts burnt if these devices are connected.

- **Maintenance and Inspection**

WARNING

1. **Do not touch the Inverter terminals. Some of the terminals carry high voltages and are extremely dangerous.**

Doing so can result in electric shock.

2. **Always have the protective cover in place when power is being supplied to the Inverter. When attach the cover, always turn off power to the Inverter .**

Doing so can result in electric shock.

3. **Maintenance, inspection must be performed only by authorized personnel.**

Failure to heed these warning can result in electric shock.

CAUTION

1. **A CMOS IC is used in the control board, handle the control board and CMOS IC carefully.**

The CMOS IC can be destroyed by static electricity if touched directly.

1.3 Usage precautions.

1.3.1、To operate with frequency above 50Hz

If the frequency exceeds 50Hz, it is not only necessary to consider the rise of motor vibration and noise, but also to make sure that the speed range of the motor bearing and mechanical devices. Please do check in advance.

.

1.3.2、Altitude and derating usage

--- When the altitude is above 1000meters, the heat dissipation of the inverter will become worse due to thin air, derating usage is necessary. Please see fig.1-4, the relation curve between the rated current of the inverter and altitude

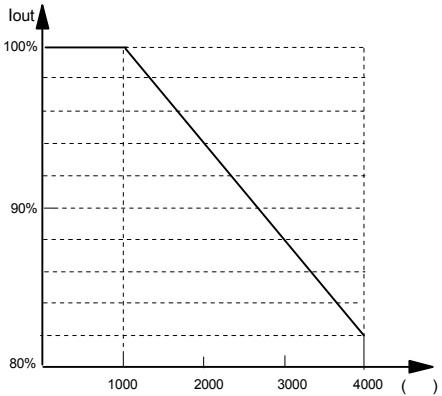

Fig. 1-3 derating usage illustration of inverter’ s rated output current and altitude

1.4 Protection Level

ED3100 Series MINI-type Inverter’s protection class IP20 is achieved under operation or display of keyboard.

Chapter 2 Product Specification and Order Information

2.1 Inverter Series Model Nos.

MINI series Inverter has got two voltage class: 220V & 380V, adaptive motor's power range: 0.4KW~1.5KW, model as below

Table 2-1 MINI series Inverter Model Nos.

Voltage	Inverter Model	Rated output current(A)	Motor Adapter (KW)
level 380V	MINI-4T0004M	1.5	0.4
	MINI-4T0007M	2.3	0.75

	MINI-4T0015M	3.7	1.5
220V	MINI-2S0004M	3.0	0.4
	MINI-2S0007M	5.0	0.75
	MINI-2S0015M	7.5	1.5

2.2 Product Spec.

Item		Standard Spec.
Input	Rated Voltage	Single-phase220V、Triphase220V、Triphase 380V; 50Hz/60Hz
	Alternation allowance	Voltage: -20% ～ +20% Voltage out of balance rate: <3%
Output	Rated voltage	0～200V/0～380V
	frequency range	0Hz～400Hz frequency range
Major control function	Modulation Method	Optimized SVPWM
	Control Mode	Speed Sensorless Vector Control
	Frequency Accuracy	Digital Setting: highest Frequency×±0. 01%; Simulation Setting: highest Frequency×±0.2%
	Frequency Resolution	Digital Setting: 0.01Hz; Analog Setting: Max. Frequency×0.1%
	Torque Boost	Auto torque boost, Manual torque boost 1%～30.0%(effective for V/F mode)
	V/F Curve	Linear V/F Curve、Square V/F Curve、User Defining V/F curve

	Built-in PID	Easy to form closed loop control system， and suitable for process control of pressure, flow rate and so on
	Multi-stage Operation	To achieve Multi-stage Operation by built-in PLC or control terminal
Vector Control	Torque Characteristics	The output is 150% of rated torque at 1Hz. Stable speed accuracy is 0.1%
	Motor constant self identification	To achieve the best control effect, motor’s constant self identification can be fulfilled at motor’s complete halt.
Operation Function	Running Command Channel	To achieve the best control effect, motor’s constant self identification can be fulfilled at motor’s complete halt.

	Frequency Setting Channel	Keyboard analog potentiometer setting; Keyboard ▲、▼ button setting; Functional Code Setting; Serial port setting; Terminal UP/DOWN Setting; Analog Voltage Setting ; Analog current setting ; Pulse Setting ; Combination Setting
	Switch Input Channel	Forwarder/reverse Command; 6 Group Programming switch value input, 30 functions can be at most
	Simulation Input Channel	2-way analog signal input, 0～20mA and 0～10V are optional
	Analog Output Channel	Could select simulation output of 0～10V、0～20mA.
	switch Output channel	3-way programming open circuit collector output; 1 way relay output signal.
Control Pannel	LED Digital Display	It can display setting frequency, input voltage, output current and other constants.
Protection Function		Over current protection ; Over Pressure protection ; Low-Voltage Protection; Over Heating Protection; Over-load Protection

2.3 Profile Size

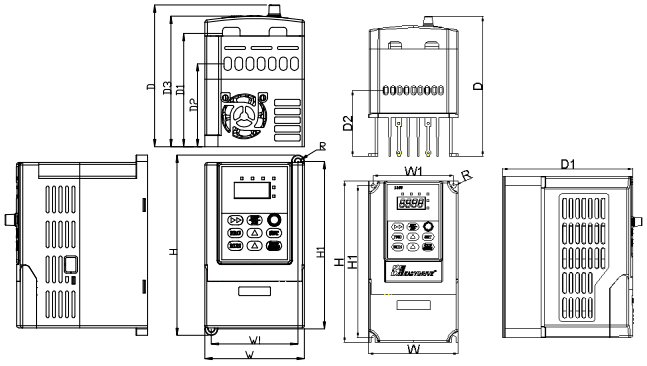

(MINI-S model) (MINI-L model)

Inverter Series appearance and installation dimensions

size	W	W1	H	H1	H2	D	D1	D2	D3	R
MINI-S	85	74	155	144		122	72	98	112	2.5
MINI-L	98	88	175	165		152	72	120		3

2.4 The Inverter’ s installation environment

2.4.1 Installation environment requirements

(1) Install the inverter in a location with good ventilation, the temperature should be within -10°C~40°C, if he temperature exceeds 40°C, external forced cooling or derating use of inverter is required.

(2) Install the inverter in a location free from direct sunlight, dust, floating fiber and metal powder.

(3) Install the Inverter in a location free from corrosive and explosive gas,Humidity should be less than 95%RH, free from condense, Keep the inverter away from electromagnetic interfering source and other electronic devices which is electromagnetic disturbance sensitive.

(4) Install the inverter on plane surface where the vibration is less than 5.9 meters/second².

2.4.2Installation Orientation and Space.

(1) Normally the inverter should be installed vertically.

(2) The installation interval and minimum distance requirements is shown in fig.2-1.

(3) If several inverters needs stack installation, guide plate needs to be put between each two inverters, as shown in Fig 2-2.

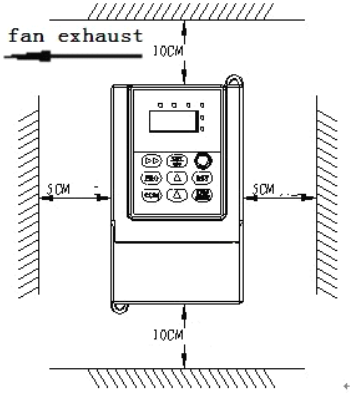

Diagram 2-1 Installation Gap

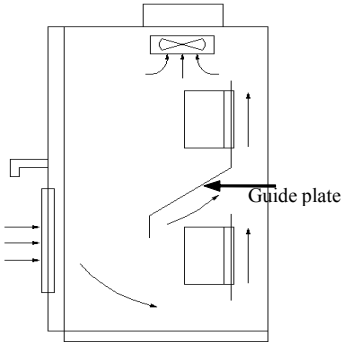

Diagram 2-2 Multi-Inverter Installation Instruction

2.5 Inverter wiring Precautions.

2.5.1The Connection of the inverver and Optional

(1)Between the electricity grid and inverter, Install disconnector and Disconnect device, For the Safety and Compulsory cut off the power When do the equipment maintenance.

(2) Inverter power supply circuit overcurrent protection must be installed on the role of the fast fuse or circuit breaker, for Avoid Fault range grow up.

2.6 Basic Running Wiring Digram

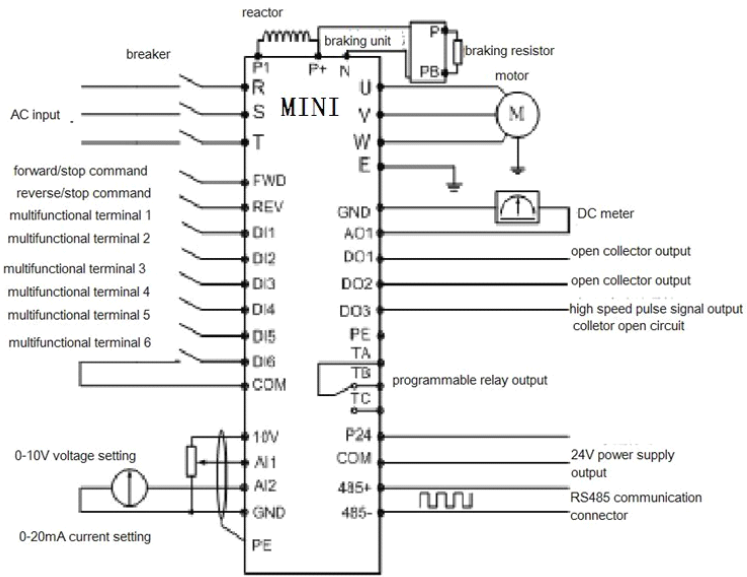

MINI-LMB

Fig.2-3 Basic Running Wiring Diagram

Note:

1. ---AI2 could select voltage or current signal input, switched by JP1 on the control panel.
2. ---AO1 could select Output voltage or current signal, switch by the JP1 on the control panel.
3. ---that’s the Wiring diagram of MINI-LMB, MINI-SMB is the Abridged version to the MINI-LMB,so part of the Function is canceled.acording to fig 2-4.

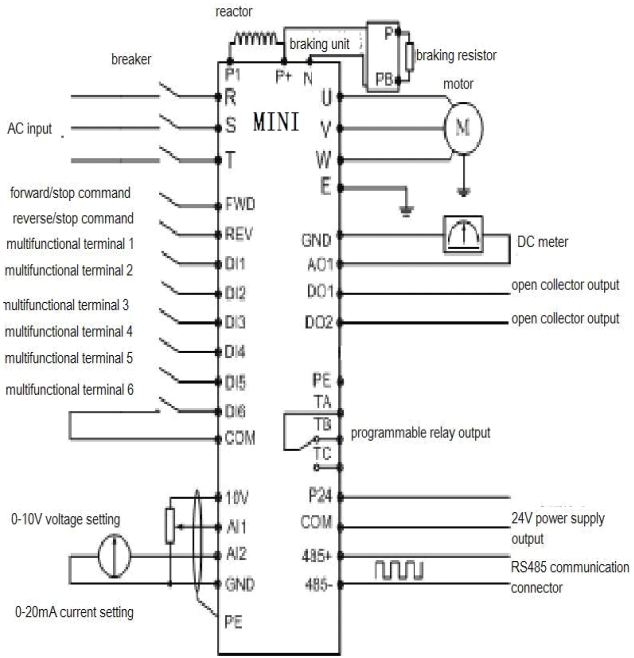

MINI-SMB

Fig.2-4Running Wiring Diagram

Note:

1---AI2 could select voltage or current signal input, switched by JP1 on the control panel.

2---A01 could select Output voltage or current signal, switch by the JP1 on the control panel.

3---There are no D15 and D03 Terminal on MINI-SMB.

2.7 Terminal Function description, shown as the Following:

TYPE	Terminal NO.	NAME	Terminal Function Description	SPEC.
Communication	485+	RS485 Communication Port	RS485 Differential Signal Positive Terminal	Standard RS485 communication port, please use twisted pair or shielded cable
	485-		RS485 Differential Signal Negative Terminal	
Multifunction Output Terminal 1	D01 D02	Open collector Output Terminal	Programmed multifunction switch terminal. Please see details in Terminal Function It can be defined as multifunctional switch value output terminals by programming. Please see the output terminal function introduction if constant P4.07,P4.08. (command terminal: COM)	optocoupler isolation output operation voltage range:9~30V max. output current:50mA
Multifunction Output Terminal 2	D03	high speed photocoupler	It outputs signal of 0-20KHz for output frequency, output current, motor speed, output voltage, etc. (please see details in P5.10)	optocoupler isolation output operation voltage range:24V max. output current:50mA (pull-up resistor needs to be connected)
Relay Output Terminal	TA.T B.TC	programmable relay terminal output	Command: TA-TB, normally closed; TA-TC normally open. When acting: TA-TB is kept open/TA-TC is kept closed(please see details in P4.09)	contactor rated value NO: 5A 250VAC NC: 3A 250VAC

analog value input 1	AI1	analog value input AI1	To accept analog voltage value input(reference ground: GND)	input voltage range : 0~10V (input impedance: 47KΩ) Resolution: 1/1000
analog value input 2	AI2	Analog value input AI2	to accept analog current, voltage value input.(reference ground: GND) please refer to fig. 3-9 to select the DIP switch JP1 on the left of control terminal	input current range : 0~20mA (input impedance: 500Ω) Resolution: 1/1000
analog value output	AO1	analog value output AO1	To provide analog voltage value output which corresponds 8 kinds of physical quantity. Output frequency is factory fault (reference ground :GND)	voltage output range: 0~10V
operation control terminal 1	FWD	forward operation command	forward and reverse operation switch value command	optocoupler isolation input input impedance: R=2KΩ max. input frequency:200Hz input voltage range9～30V
operation control terminal 2	REV	reverse operation command	forward and reverse operation switch value command	optocoupler isolation input input impedance: R=2KΩ max. input frequency:200Hz input voltage range9～30V
multi function Input Terminal 1	DI1	Multi function Input Terminal 1	hey can be defined as multifuncational switch value input terminals by programming. Please see the input terminal function description of terminal function constants in chapter 6.(common terminal: COM)	optocoupler isolation input input impedance: R=2KΩ max. input frequency:200Hz input voltage range9～30V

multi function Input Terminal 2	DI2	Multi function Input Terminal 2	hey can be defined as multifuncational switch value input terminals by programming. Please see the input terminal function description of terminal function constants in chapter 6.(common terminal: COM)	optocoupler isolation input input impedance: R=2KΩ max. input frequency:200Hz input voltage range9～30V
multi function Input Terminal 2	DI3	Multi function Input Terminal 3	hey can be defined as multifuncational switch value input terminals by programming. Please see the input terminal function description of terminal function constants in chapter 6.(common terminal: COM)	optocoupler isolation input input impedance: R=2KΩ max. input frequency:200Hz input voltage range9～30V
multi function Input Terminal 2	DI4	Multi function Input Terminal 4	hey can be defined as multifuncational switch value input terminals by programming. Please see the input terminal function description of terminal function constants in chapter 6.(common terminal: COM)	optocoupler isolation input input impedance: R=2KΩ max. input frequency:200Hz input voltage range9～30V
multi function Input Terminal 2	DI5	Multi function Input Terminal 5	hey can be defined as multifuncational switch value input terminals by programming. Please see the input terminal function description of terminal function constants in chapter 6.(common terminal: COM)	optocoupler isolation input input impedance: R=2KΩ max. input frequency:200Hz input voltage range9～30V

multi function Input Terminal 2	DI6	Multifunction Input Terminal6	could be used as pulse signal input port	optocoupler isolation input input impedance: R=2KΩ max. input frequency:200Hz input voltage range9～30V
Power	10V	+10V power	externally supply +10V power(negative pole terminal: GND)	Maximum output current:50mA
Public side	GND	+10V power common port	analog signal and +10V power reference ground	COM and GND isolated from each other in interior
Public side	COM	+24V power common port	Digital signal input, Output common port	
Power	+24V	+24V voltage	Digital Signal Power	Maximum Output Current:50mA

2.8 Operating and using of keyboard

Method for using panel

Can carry on various operations to the inverter through operating panel, there are five ways:

● ►► **Status parameter display switching:**

Pressing key to display b group status supervision parameter.Method for switching is shown as diagram 4-7:

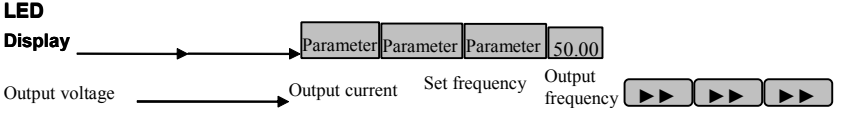

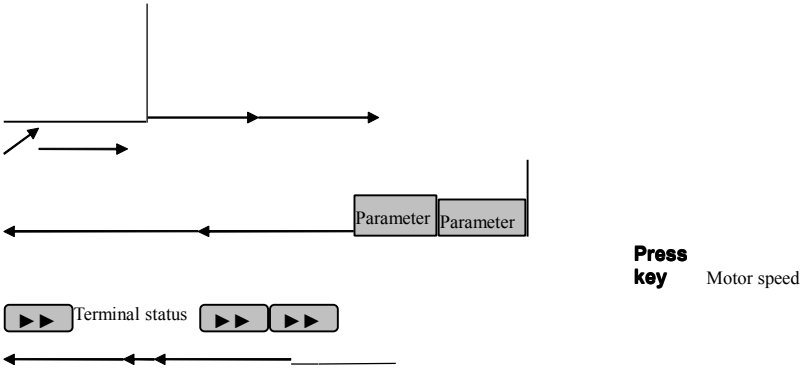

Diagram 2-8.1 Example of Run status parameter display operating

（1）Only b000～b012 status parameters can be displayed when shipping out the inverter.

（2）Pressing SET key to switch into defaulting supervision display status directly when the user see about status supervision parameter. Defaulting supervision parameter in stop status is set frequency and in run status, it is output frequency.

- **Setting of function code parameter**

Take function code P052 modified from 5.00Hz to 8.50Hz as example.

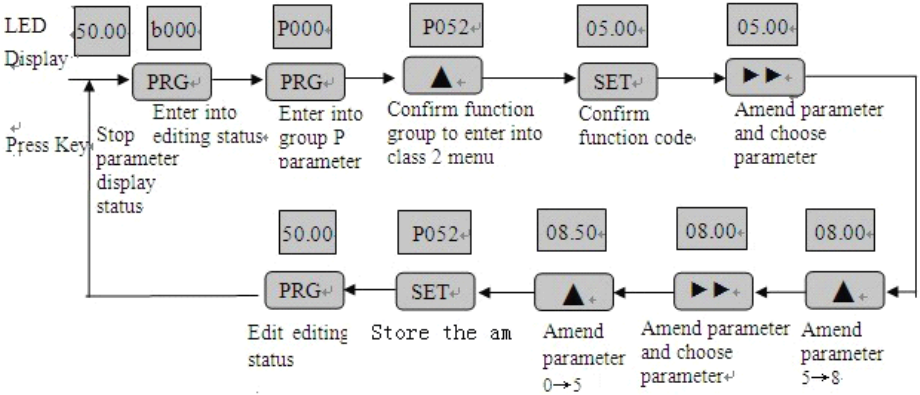

Diagram 2-8.2 Example of editing parameter operation

Description: under menu status, if the parameter has no flashing digit, this function code can not be modified, possible reasons are as follows:

（1）This function code is the parameter that is not amendable, for example, actual detected status parameter, run record parameter etc.;

（2）This function code can not be modified under run status and can be changed after stopping running

（3）When parameter is protected, all the function codes can not be modified.

● Jog run operation

Assumed keyboard as current run command channel, jog run frequency 5Hz, in stop status, the example as follows:

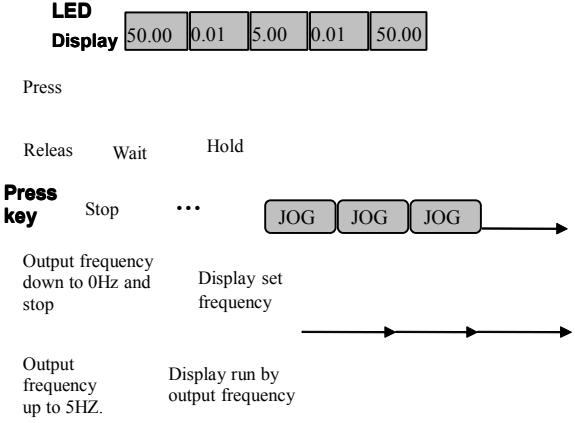

Diagram 2-8.3 Example of jog run operation

● Run, stop and forward/reverse switching

Assumed keyboard as current run command channel, specified frequency 20.00Hz, forward run, in waiting status, the example as follows:

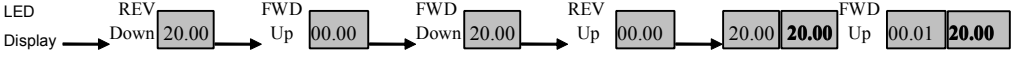

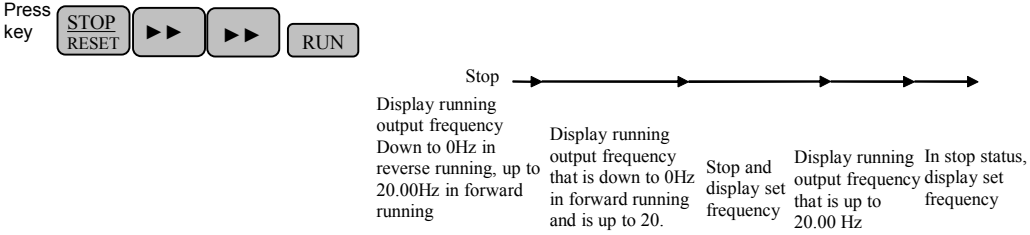

Diagram 2-8.4 Example of jog run operation

- **Specified frequency keyboard ▲,▼key providing operation**

Assumed current status is stop parameter stop status (P004=1), the operation as follow:

(1) Frequency adjustment is provided with integral way;

(2) Pressing key not release, the lowest digit increase at first; if the tens digit carries on, tens digit increase; if the hundreds digit carries on, hundreds digit increase….. Pressing the key again after the key is released, value increases from lowest digit again.

(3)Pressing key not release, the lowest digit decrease at first; if the tens digit carries on, tens digit decrease; if the hundreds digit carries on, hundreds digit decrease…. Pressing the key again after the key is released, value decreases from lowest digit again.

Chapter 3 Function parameter table

3.1 Introduction of symbol

×—Parameter can not be changed in process of running；

√—Parameter can be changed in process of running；

3.2 Function parameter table:

Basic parameters

Function Code	Name & Definition	Set Range	Minimum Unit	Factory Default	Modification
P0.00	Control mode	0: Sensor-Less vector control (SVC) 1: V/F control	1	1	×
P0.01	Frequency input channel selection	0:Panel analog potentiometer setting 1:Keyboard digit setting 1 2:UP/DOWN terminal digit setting 2 3. Digital setting 3 Serial Port provision 4: AI1 analog voltage signal setting（0～10V） 5:AI1 analog current signal setting（0～20mA） 6:Terminal pulse(0～10.0k) 7: Combination provision 8: External terminal choice provision	1	1	○
P0.02	Load motor rated current	0.1A~999A	1	00	○
P0.03	Freq. digit setting	0.0Hz ~ Upper limit freq.	0.01Hz	50.00Hz	○
P0.04	Running command selection	0:Available keyboard run control 1:Available external terminal run command control 2:Available serial port run command control	1	0	○

P0.05	Run direction setting	0: Identical with the setting direction 1: Opposite to setting direction 2: Prevent reversing	1	0	○
P0.06	Upper limit freq.	{P0.07，0.10Hz} ～400.00Hz	0.01Hz	50.00Hz	×
P0.07	Lower limit freq	0.00～【P0.06】	0.01Hz	00.00Hz	×
P0.08	Basic operating frequency	1.0Hz ~ Upper limit freq.	0.01Hz	50.00Hz	×
P0.09	Maximum output voltage	200～500V 100～250V	1	380V 220V	×
P0.10	Model Select	0: M-model(constant torque load models)	1	0	×
P0.11	Torque upgrade option	0: Manual 1: Automatic	1	0	×
P0.12	Torque upgrade set	0.0 to 30.0% Note: only when the force at the time of F0.11 = 0	0.1	Model Setting	○
P0.13	Slip frequency compensation	0.0～150.0%	0.1	0.0	○
P0.14	Acceleration time1	0.1 ~ 3600 Note: The default units seconds; acceleration and deceleration time units chosen see P3.09	0.1	Model Setting	○
P0.15	Deceleration time1		0.1	Model Setting	○
P0.16	V/F curve setting	0: Constant Torque 1:down torque curve1(1.7 power) 2:down torque curve2 (2.0 power) 3:Users set V / F curve (from P0.17 ~ P0.22 identified)	1	0	×
P0.17	V/F freq.value F1	0.00～Frequencies F2	0.01Hz	12.50Hz	×
P0.18	V/F volt. value V1	0.0～Voltages V2	0.1%	25.0%	×

P0.19	V/F freq.value F2	Frequencies F1～Frequencies F3	0.01Hz	25.00Hz	×
P0.20	V/F volt. value V2	Voltages V1～Voltages V3	0.1%	50.0%	×
P0.21	V/F freq.value F3	Frequencies F2～Basic operating frequency	0.01Hz	37.50Hz	×
P0.22	V/F volt. value V3	Voltages V2～100.0%	0.1%	75.0%	×
P0.23	REV/JOG key function setting	0：REV　1：JOG	1	1	○

Basic parameter

Function Code	Name & Definition	Set Range	Minimum Unit	Factory Default	Modification
1.00	Load motor rated voltage	380V：200～500V 220V：100～250V	1V	380V 220V	○
P1.01	Load motor rated current	0.1～500.0A	0.1A	Model Setting	○
P1.02	Load motor rated speed	300～3000RPM	1RPM	Model Setting	×
P1.03	Load motor rated frequency	1.00～400.00Hz	0.01Hz	50.00Hz	×
P1.04	Load motor Empty current	0.1～500.0A	0.1A	Model Setting	○
P1.05	Load motor stator resistance	0.001～10.000Ω	0.001	Model Setting	×
P1.06	Load motor rotor resistance	0.001～10.000Ω	0.001	Model Setting	×
P1.07	Motor and rotor inductance	0.01～600.00mH	0.01mH	Model Setting	×

P1.08	Motor and rotor mutual inductance	0.01～600.00mH	0.01mH	Model Setting	×
P1.09	Reserved				
P1.10	Factor to the poor compensation	0.50~2.00	0.01	1.00	○
P1.11	Exciting motor pre-selection	0: conditions for effective 1: has been effective	1	0	×
P1.12	Pre-duration of the electrical excitation	0.1～10S	0.1	0.2S	×
P1.13	The electrical parameters of self-learning	0: No action 1: static self-learning (only when P0.00 to 0 effective)	1	0	×
P1.14	Central rate proportional gain	0.01～5.00	0.01	1.00	○
P1.15	Central rate integration time constants	0.01～10.00S	0.01S	2.00S	○
Auxiliary parameters					
Function Code	Name & Definition	Set Range	Minimum Unit	Factory Default	Modification
P2.00	Starting way	0: Start with starting frequency 1: Speed tracking start	1	0	×
P2.01	Starting freq.	0.00～10.00Hz	0.01Hz	1.00Hz	○
P2.02	Starting freq. duration	0.0～10.0s	0.1s	0.0s	×

P2.03	DC brake current at starting	0.0～100.0%	0.1%	0.0%	○
P2.04	DC brake time at starting	0：DC braking action is not 0.1～30.0s	0.1s	0.0s	×
P2.05	Acc./Dec. mode selection	0: Linear Acc/Dec mode 1: S curve Acc/Dec mode	1	0	○
P2.06	S-curve start of the proportion of time	10.0～40.0%	0.1%	20.0%	×
P2.07	S-curve rise / fall time of	10.0～80.0%	0.1%	60.0%	×
P2.08	AVR function	0: Ban 1: Effective	1	1	×
P2.09	Automatic energy-saving operation	0: Ban 1: Effective	1	0	×
P2.10	FWD/REV dead time	0.1～10.0s	0.1s	0.0s	×
P2.11	Stop mode	0: Decelerating and stopping 1: Free stop	1	0	×
P2.12	DC brake starting freq. at stopping	0.00～20.00Hz	0.01Hz	0.00Hz	○
P2.13	DC brake current at stopping	0.0～100.0%	0.1%	0.0%	○
P2.14	DC brake time when stopping	0：DC braking action is not 0.1～30.0s	0.1s	0.0s	×

P2.15	Power-off restart setting	0: Ban 1: conventional starter 2: Starting track speed	1	0	×
P2.16	Power-off waiting time before restarting	0.0～20.0s	0.1s	0.5s	×
P2.17	Failure self-reset times	0～10	1	0	×
P2.18	Failure self-reset interval	0.5～25.0s	0.1s	3.0s	×
P2.19	Jog run frequency	0.00～50.00Hz	0.01Hz	10.00Hz	○
P2.20	Jog Acc. time	0.1～3600 Note: The default units seconds; acceleration and deceleration time units chosen see P3.09	0.1s	Model Setting	○
P2.21	Jog Dec time	0.1～3600 Note: The default units seconds; acceleration and deceleration time units chosen see P3.09	0.1s	Model Setting	○
P2.22	Acc. time 2	0.1～3600 Note: The default units seconds; acceleration and deceleration time units chosen see P3.09	0.1s	Model Setting	○
P2.23	Dec. time 2	0.1～3600 Note: The default units seconds; acceleration and deceleration time units chosen see P3.09	0.1s	Model Setting	○
P2.24	Acc. Time3	0.1～3600 Note: The default units seconds; acceleration and deceleration time units chosen see P3.09	0.1s	Model Setting	○

P2.25	Dec. time 3	0.1～3600 Note: The default units seconds; acceleration and deceleration time units chosen see P3.09	0.1s	Model Setting	○
P2.26	Acc. time 4	0.1～3600 Note: The default units seconds; acceleration and deceleration time units chosen see P3.09	0.1s	Model Setting	○
P2.27	Dec. time 4	0.1～3600 Note: The default units seconds; acceleration and deceleration time units chosen see P3.09	0.1s	Model Setting	○
P2.28	Multi-speed frequency 1	0.0Hz ~ Upper limit freq.	0.01Hz	5.00Hz	○
P2.29	Multi-speed frequency 2	0.0Hz ~ Upper limit freq.	0.01Hz	10.00Hz	○
P2.30	Multi-speed frequency 3	0.0Hz ~ Upper limit freq.	0.01Hz	15.00Hz	○
P2.31	Multi-speed frequency 4	0.0Hz ~ Upper limit freq.	0.01Hz	20.00Hz	○
P2.32	Multi-speed frequency 5	0.0Hz ~ Upper limit freq.	0.01Hz	25.00Hz	○
P2.33	Multi-speed frequency 6	0.0Hz ~ Upper limit freq.	0.01Hz	30.00Hz	○
P2.34	Multi-speed frequency 7	0.0Hz ~ Upper limit freq.	0.01Hz	40.00Hz	○
P2.35	Reserved				
P2.36	Jumping frequency 1	0.0Hz ~ Upper limit freq.	0.01Hz	0.00Hz	○
P2.37	Jumping rance 1	0.0～10.0Hz	0.01Hz	0.00Hz	○
P2.38	Jumping frequency 2	0.0Hz ~ Upper limit freq.	0.01Hz	0.00Hz	○

P2.39	Jumping rance 2	0.0～10.0Hz	0.01Hz	0.00Hz	○
P2.40	Jumping frequency 3	0.0Hz ~ Upper limit freq.	0.01Hz	0.00Hz	○
P2.41	Jumping rance 3	0.0～10.0Hz	0.01Hz	0.00Hz	○
P2.42	Carrier frequency settings	1.0～12.0KHz	0.1KHz	Model Setting	○
P2.43	Carrier control mode	0: fixed carrier 1: automatic adjustment of Carrier	1	1	○
User management interface parameters					
P3.00	Reserved				
P3.01	Initialization parameters	0: Operation 1: restore the factory settings 2: Clear fault records	1	0	×
P3.02	Into the parameters of protection	0: Allow edit all parameters (in the operation of some parameters can not be amended) 1:Amended to allow only the frequency settings 2:Laws prohibit all parameters Note: The above parameters of the invalid	1	0	○
P3.03	Manufacturers password	0～9999	1	0	○
P3.04	Monitoring parameters 1 choice	0～18	1	0	○
P3.05	Monitoring parameters 2 choice	0～18	1	1	○
P3.06	Line speed factor	0.01～100.0	0.01	1.00	○

P3.07	Closed-loop coefficient shows	0.01～100.0	0.01	1.00	○
P3.08	Software version	0～99.99	0.01		×
P3.09	Modified time flat rate	0: seconds 1: Minutes	1	0	○
Digital input and output					
P4.00	Input terminal DI1 function	0: Leave control terminal unused 1: Multi-speed selection 1 2: Multi-speed selection 2 3: Multi-speed selection 3 4: Acceleration and deceleration time 1 5: Acceleration and deceleration time 2 6: Frequency channel selection 1 7: Frequency channel selection 2 8: Frequency channel selection 3 9: Forward jog control 10: Reverse jog control 11: Free stop control 12: Freq. increasing command (UP) 13: Freq. decreasing command (DOWN) 14: External device failure input 15: Three-line run control 16: DC brake order 17: Counter cleared signal input 18: Counter trigger signal input (only DI6 effective) 19: External pulse input (only DI6 effective) 20: External reset input 21:UP / DOWN frequency terminal cleared 22: PID run into 23:Programmable multi-speed operation in 24: Wobbling Run into 25: Wobbling State reset 26: External shutdown command 27:Inverter prohibition of operation instructions 28:Inverter prohibition of Acceleration and deceleration instructions(Reserved) 29: Switch to the terminal order	1	0	×
P4.01	Input terminal DI2 function		1	0	×
P4.02	Input terminal DI3 function		1	0	×
P4.03	Input terminal DI4 function selection （0 ~ 20）		1	0	×

P4.04	Input terminal DI5 function	30: Switch to the frequency AI2 31: Reserved	1	0	×
P4.05	Input terminal DI6 function		1	0	×
P4.06	FWD / REV terminal control mode	0: second-line-control mode 1 1: second-line-control mode 2 2: three-line-control mode 1 3: three-line-control mode 2 (Reserved)	1	0	×
P4.07	Open collector output terminal DO1 setting	0:Inverter running indication 1:Freq./speed arriving signal(FAR) 2:Freq./speed level detecting signal (FDT) 3: Zero-speed converter in the operation of instructions 4:External failure input 5:Output freq. reaching upper limit 6:Output freq. reaching lower limit 7: Programmable multi-speed operation of a complete cycle 8: Inverter overload alarming Signal 9: Inverter ready for operation 10: Counter detection signal output 11: Counter reset signal output 12: Inverter failure 13: Inverter under-voltage blockage shutdown 14: Wobbling On the threshold limit 15: Programmable multi-speed run ending	1	0	○
P4.08	Open collector output terminal DO2 setting		1	1	○
P4.09	Programmable relay output		1	12	○
P4.10	FDT level setting	0.0 Hz~Upper limit frequency	0.01Hz	10.00Hz	○

P4.11	FDT lag	0.0～30.00Hz	0.1Hz	1.00Hz	○
P4.12	Freq. checkout scope(FAR)	0.00Hz～15.0Hz	0.01Hz	5.00Hz	○
P4.13	Overload pre-alarm level	20～120%	1%	100%	○
P4.14	Overload pre-alarming time	0.0～15.0s	0.1s	1.0s	×
P4.15	Counter Reset value setting	【P4.16】～60000	1	1	×
P4.16	计数器检测值 设定	0～【P4.15】	1	1	×
Analog input and output parameters					
P5.00	AI1 enter a minimum voltage	0.0～【P5.01】	0.1V	0.0V	○
P5.01	AI1 enter a maximumvoltage	【P5.00】～10.0V	0.1V	10.0V	○
P5.02	AI2 enter a minimum current	0.0～【P5.03】	0.1mA	0.0mA	○
P5.03	AI2enter a maximum current	【P5.02】～20.0mA	0.1mA	20.0mA	○
P5.04	Enter a minimum frequency pulse	0.0～【P5.05】	0.1KHz	0.0KHz	○
P5.05	Enter a maximum frequency pulse	【P5.04】～20.0kHz	0.1KHz	10.0KHz	○

P5.06	Enter the corresponding set minimum frequency	0.0Hz ~ Upper limit freq.	0.01Hz	0.00Hz	○
P5.07	Enter the corresponding set maximum frequency	0.0Hz ~ Upper limit freq.	0.01Hz	50.00Hz	○
P5.08	Analog input signal delay time	0.1～5.0s	0.1s	0.5s	○
P5.09	AO1-Analog Output function choice	0: output frequency 1: Set frequency 2: output current 3: motor speed 4: output voltage 5: bus voltage 6: PID to the quantitative 7: PID feedback of	1	0	○
P5.10	DO3-Pulse Output function choice		1	2	○
P5.11	AO1 to set the gain	20～200%	1%	100%	○
P5.12	Reserved				
P5.13	DO3 to set the gain	20～200%(Rating 10KHZ)	1%	100%	○
P5.14	Reserved				
Function Code	Name & Definition	Set Range	Minimum Unit	Factory Default	Modification

P5. 15	Combination of a given channel settings	A B Csingle-LED: Operation 0: Keyboard Potentiometers 1: Digital setting 2: Reserved 3: Communication setting 4: AI1 5: AI2 6:Terminal Pulse Dsingle-LED: Operation Reserved	1	000	×
P5. 16	Combination of a given set algorithm	A B single-LED: Operation 0: Adder 1:Subtraction 2: Absolute value 3: Take the maximum 4: Take the minimum A B single-LED: Operation Reserved	1	00	○
Process PID control parameters					
P6. 00	PID action selection	A single-LED: Set up 0: Close 1: Open B single-LED: PID investment choice 0: Automatic 1: The definition of multi-functional terminal manually input C single-LED: Operation Reserved D single-LED: Operation Reserved	1	00	×

P6.01	PID provision channel selection	0: Digit keyboard input 1: Digital setting 2: Reserved 3: Reserved 4: AI1 5: AI2 6: Terminal Pulse 7:AI1+AI2 8:AI1-AI2 9: MIN {AI1,AI2} 10: MAX {AI1,AI2}	1	1	×
P6.02	PID feedback channel selection		1	4	×
Function Code	Name & Definition	Set Range	Minimum Unit	Factory Default	Modification
P6.03	Digital setting of specified quantity	0.00～10.00V	0.01V	0.00V	○
P6.04	Feedback gain access	0.01～10.00	0.01	1.00	○
P6.05	Feedback channel polarity	0: Positive 1: Negative	1	0	×
P6.06	PID proportional gain P	0.01～10.00	0.01	1.00	○
P6.07	PID integral time Ti	0.1～200.0s	0.1s	1.0s	○
P6.08	Differential time Td	0.0：No differential 0.1～10.0s	0.1s	0.0s	○
P6.09	PID sampling time T	0.00：Automatic 0.01～10.00s	0.01s	0.00s	○
P6.10	Deviation limits	0.0～20.0%	0.1%	0.0%	○
P6.11	Closed-loop preset frequencies	0.0Hz ~ Upper limit freq.	0.01Hz	0.00Hz	○

P6.12	Preset to maintain the frequency of time	0.0～6000.0s	0.1s	0.0s	×
P6.13	Sleeping threshold	0.0～10.00V	0.01	10.00V	○
P6.14	Waking threshold	0.0～10.00V	0.01	0.00V	○
Programmable operating parameters					
P7.00	Programmable operational control (PLC with simple operation and put the Wobbling operation)	A single-LED: Operation choice 0: No Action 1: single loop (Summary PLC) B single-LED: Programmable multi-speed (PLC) running into form 0: Auto 1: The definition of multi-functional terminal manually input C single-LED: Wobbling Running into form 0: Auto 1: The definition of multi-functional terminal manually input C single-LED: Reserved	1	000	×
Function Code	Name & Definition	Set Range	Minimum Unit	Factory Default	Modification
P7.01	Stage 1 run-time	0.0～6000.0s	0.1s	10.0s	○
P7.02	Stage 2 run-time	0.0～6000.0s	0.1s	10.0s	○
P7.03	Stage 3 run-time	0.0～6000.0s	0.1s	10.0s	○
P7.04	Stage 4 run-time	0.0～6000.0s	0.1s	10.0s	○
P7.05	Stage 5run-time	0.0～6000.0s	0.1s	10.0s	○
P7.06	Stage 6 run-time	0.0～6000.0s	0.1s	10.0s	○
P7.07	Stage 7 run-time	0.0～6000.0s	0.1s	10.0s	○

P7.08	Reserved				
P7.09	The direction of 1 multi	A single-LED:Stage 1 direction 0: FWD 1: REV B single-LED:Stage 2 direction 0: FWD 1: REV C single-LED:Stage 3 direction 0: FWD 1: REV D single-LED:Stage 4 direction 0: FWD 1: REV	1	0000	○
P7.10	The direction of 2 multi	A single-LED:Stage 5 direction 0: FWD 1: REV B single-LED:Stage 6 direction 0: FWD 1: REV C single-LED:Stage 7 direction 0: FWD 1: REV D single-LED: Reserved	1	000	○
P7.11	Wobbling operating parameters	A single-LED: Reserved B single-LED: Wobbling Control C single-LED: Wobbling Starting choose downtime 0: the stands before the memory of the state starting 1: Start re-start Dsingle-LED: Wobbling Power-down state of storage 0: Power-down storage Wobbling status 1: Power-down Wobbling state does not store	1	000	×
Function Code	**Name & Definition**	**Set Range**	**Minimum Unit**	**Factory Default**	**Modification**
P7.12	Wobbling preset frequencies	0.0Hz ~ Upper limit freq.	0.01Hz	10.00Hz	○
P7.13	WobblingPreferencesfrequency waiting time	0.0～3600.0s	0.1s	0.0s	×

P7.14	Wobbling Amplitude	0.0～50.0%	0.1%	10.0%	○
P7.15	Sudden jump frequency	0.0～50.0%（Compared to Wobbling Amplitude）	0.1%	10.0%	○
P7.16	Wobbling Cycle	0.1～3600.0s	0.1s	10.0s	○
P7.17	Delta waves rise time	0.0～100.0%(Wobbling Cycle)	0.1%	50.0%	○
P7.18	Wobbling Center frequency base	0.0Hz ~ Upper limit freq.	0.01Hz	10.00Hz	○
Communication parameter					
P8.00	Local communication address	1 ~ 30(0: host setting)	1	1	×
P8.01	Communications configuration	A single-LED: Baud rate option 0：1200BPS 1：2400BPS 2：4800BPS 3：9600BPS 4：19200BPS 5：38400BPS B single-LED: Data format 0：No checkout 1：Even checkout 2：Odd checkout C single-LED: Communication failure Action choice 0: stands 1: maintain the status quo D single-LED: Reserved	1	013	×
P8.02	Communicatios overtime detection time	0.0～100.0s	0.1s	10.0s	×
P8.03	Local response delay	0～1000ms	1ms	5ms	×

P8.04	Linkage of settings	0.01～10.00	0.01	1.00	○
Protection parameters					
Function Code	Name & Definition	Set Range	Minimum Unit	Factory Default	Modification
P9.00	Motor overload protection factor	30%～110%	1%	105%	○
P9.01	Undervoltage protection setting frequency	360～480V	1V	400V	○
P9.02	Over-voltage level of restrictions	660～760V	1V	700V	○
P9.03	Current limiting level	120%～220%	1%	180%	○
High functional parameters					
PA.00	Zero-run threshold	0.00～50.00Hz	0.01Hz	0.00Hz	○
PA.01	Zero-Backlash	0.00～50.00Hz	0.01Hz	0.00Hz	○
PA.02	Start-voltage power brake	600～720V	1V	700V	○
PA.03	Energyconsumption ratio of braking action	10～100%	1%	50%	○

PA.04	Cooling fan control	0：Automatic Control Mode 1：power process has been functioning	1	0	○
PA.05	UP / DOWN terminal modified rate	0.01Hz～100.0Hz/S	0.01Hz/S	1.00Hz/S	○
PA.06	So that the modulation	0：Ban 1：Allow	1	0	×
Manufacturers parameters					
Function Code	Name &Definition	Set Range	Minimum Unit	Factory Default	Modification
PB.00	Reserved				×
PB.01	Reserved				×
PB.02	Reserved				
PB.03	Reserved				
PB.04	Reserved				
PB.05	Reserved				
PB.06	Reserved				
monitoring parameterS					

Monitoring Code	Name
D-00	Output frequency (Hz)
D-01	Set frequency (Hz)
D-02	Output current (A)
D-03	Output voltage (V)
D-04	Motor speed (RPM/min)
D-05	Operating speed line (m/s)
D-06	Set speed line (m/s)
D-07	Bus voltage (V)
D-08	Input Voltage (V)
D-09	PID Settings
D-10	PID Feedback value
D-11	Analog input AI1(V)
D-12	Analog input AI2(A)
D-13	Pulse input frequency (KHz)
D-14	Input terminals state
D-15	Radiator temperature (℃)

D-16	Module temperature (℃)
D-17	The current value of
D-18	Setting of numerical
D-19	The first fault code
D-20	The Second fault code
D-21	The Third fault code
D-22	The first failure output frequency (Hz)
D-23	The first failure set frequency (Hz)
D-24	The first failure output current (A)
D-25	The first failure output voltage (V)
D-26	The first failure output Bus voltage (V)
D-27	The first failure output module temperature℃)
D-28	Software version

Chapter 4 Parameter Function Descriptions

Detailed Parameter Function Description

4.1 Parameter Group -- Basic function

P0.00	Speed Control Mode		Factory Setting	1
	Setting range	**0**	**Sensorless vector control(SVC)**	
		1	**V/F control**	

0：Sensorless vector control

It is widely used for the application which requires no-PG encoder drives with high performance and adjustable Speed. One inverter can be used to drive only one motor, such as machine tool, centrifugal machine and wire-drawing machine, etc.

1：V/F control

It is suitable for the application requiring lower speed control and torque control, such as draught fans, pumps etc. It can be used to drive multi motors.

Notice：

1. In the vector control mode, the autotuning of motor parameters must be accomplished properly before the first running in order to get exact motor parameters. Once the autotuning is finished, these obtained motor will be saved in the control board for following running usage. It is especially noticed that motor name-plate data must be correspond with motor parameters of inverter before autotuning, otherwise it will cause failure of autotuning or wrong results. When you can not get information of motor name-plate data, please select V/F control mode.

2. In the vector control mode, in order to achieve better stability and dynamic response, the parameters of ASR (refer to P1.14，P1.15 please) should be correct set.

3. In the vector control mode, one inverter can drive only one motor. And the voltage grade of inverter and motor can not differ largely, otherwise it will affect the better control of motors or even make the motors malfunction.

S52

P0.01	Frequency Preset Source Selection		Factory Setting	1
	Setting range	**0**	**Keypad regulation resistance**	
		1	**Digital Preset 1(set by ▲/▼ or digital encoder)**	
		2	**Digital Preset 2(set by UP/DOWN)**	
		3	**Digital Preset 3(Communication)**	

		4	**AI1 analog input（0～10V）**
		5	**AI2 analog input（0～20mA）**
		6	**HD1（0～20kHz）**
		7	**Combination**
		8	**External terminals**

0：Keypad regulation resistance

The reference frequency is set by keypad regulation resistance (on LED keypad).

1：Digital Preset 1

The reference frequency is determined by P0.03. User can use button ▲/▼ on operation keyboard or digital encoder to adjust running frequency. The adjusted frequency value will be saved in P0.03. User can also set P0.02 parameter to clear this adjusted value.

Notice：

LCD keypad supports digital encoder, but not analog regulation resistance. This encoder can use as ▲/▼ and **SET** to achieve adjusting digital frequency and function parameters, parameters save etc. So it is convenient for users. But when use the encoder, please set P0.01 to 1, not 0, otherwise it will be disabled to preset frequency. Furthermore, when you use analog regulation resistance to select frequency, make use of LED keypad or external encoder please.

2：Digital Preset 2

The reference frequency is set by external UP/DOWN terminals which are preset to control frequency. When UP-COM is closing, frequency will be increased; When DOWN-COM is closing, frequency will be lower; When UP/DOWN is closing or opening a contact with COM simultaneously, frequency will be not changed. These adjusted frequency values will be saved in P0.03 when power off.

Frequency adjustment speed of UP/DOWN is determined by PA.05

3：Digital Preset 3

The reference frequency is set by host through RS485 connector.

4：AI1 analog input（0～10V）

The reference frequency is set by external voltage input terminal AI1（0～10V）. Please refer to P5.00-P5.01.

5：AI2 analog input（0～20mA）

The reference frequency is set by external voltage input terminal AI2（0～20mA/0～10V）. Please refer to P5.02-P5.03.

6：HD1（0～20kHz）

The reference frequency is set by DI6 through pulse signal input（0～20kHz）. Please refer to P5.02-P5.03.

7：Combination

The reference frequency is determined by linear combinations of preset sources. Combinations please refer to P5.15-P5.16.

8：External terminals

The reference frequency is the result of 8 opening / closing combinations of multi-function terminals which are set by P4.00-P4.05. (If it is set to 0, multi-function terminal will open a contact with COM terminal, if it is set to 1, multi-function terminal will close a contact with COM.) Detailed Combinations please see below：

Source Selection Terminal 3	**Source Selection Terminal 2**	**Source Selection Terminal 2**	**Frequency Preset Source Selection**
0	**0**	**0**	Keypad regulation resistance
0	**0**	**1**	**Digital Preset 1**
0	**1**	**0**	**Digital Preset 2**
0	**1**	**1**	**Digital Preset 3**
1	**0**	**0**	**AI1 analog input**
1	**0**	**1**	**AI2 analog input**
1	**1**	**0**	**HD1**
1	**1**	**1**	**Combination**

Table 4-1

Notice：

This function is suitable for application which requires real-time switch frequency command sources. If switch between voltage preset and current preset is needed, it means, sometimes through voltage to select frequency, sometimes through current source to select it, it will achieved by above switch combinations of “100”和“101”. The frequency source selection can be selected also by multifunctional terminal which is defined to “switch frequency to AI2”.

P0.02	Digital Frequency Control	Factory Setting	00
	Setting range	**00-11**	

LED unit position

0： Save the reference frequency value in function code P0.03 when power off. When inverter power on, the saved value will be automatically displayed.

1： The frequency value will not be saved when power off. When inverter power on, it will run from 0.0Hz.

LED tens place

0：The reference frequency value will not be saved when power off.

1：The reference frequency value will be saved in P0.03 when power off.

Notice：

Setting for LED unit position valid only when P0.01=1、2、3.

Setting for LED tens place valid when P0.01=2、3. When P0.01=1(digital preset 1), the frequency value when power off will be always as a default saved.

P0.03	Run frequency digital preset	Factory Setting	0
	Setting range	**0.00-Upper frequency limit**	

When P0.01=1、2、3, this parameter is the initial value of inverter reference frequency. When the operation panel is in the control mode, when P0.01=1，user can use the key ▲/▼ to adjust this parameter; When P0.01=2, the frequency will run from the initial value of reference frequency, and then be adjustable by means of UP/DOWN.

P0.04	Run Command Source		Factory Setting	0
	Setting range	0	Keypad	
		1	**Terminal**	
		2	**Communication**	

This parameter can set physical sources for control commands such as start, stop, forward run and so on.

P0.05	Running direction selection		Factory Setting	0
	Setting range	0	**Forward**	
		1	**Reverse**	
		2	**Forbid reverse**	

It is used to change the rotation direction of motor without changes of other parameters. The function can be achieved also by adjusting any 2 motor output wires.

Notice:

When this parameter is selected, after autotuning, the rotation direction of motor will be restored to previous direction. Please be cautious to use in conditions of forbidding motor rotation adjustment.

P0.06	Upper frequency limit		Factory Setting	50.00Hz
	Setting range	**[F0.07]—400.0Hz**		
P0.07	Lower frequency limit		Factory Setting	0.00Hz

	Setting range	**0.00Hz—[F0.00]**

Upper frequency limit is the inverter running maximum frequency, symbol is fu, its setting range is [P0.07]—400.0Hz; Lower frequency limit is the inverter running minimum frequency, symbol is fi, its setting range is 0.00Hz—[P0.06]; When inverter begins to run, it will run from starting frequency. When selected frequency is lower than lower frequency limit, inverter will run with lower frequency limit until it stops or selected frequency exceeds lower frequency limit.

P0.08	Basic Running Frequency	Factor	50.00Hz
	Setting range	**1.00—Upper frequency limit**	

Basic running frequency fb is the corresponding minimum frequency to maximum output voltage, generally motor rated frequency. It determines frequency setting and ACC / DEC time. Please be cautious to adjust it.

P0.09	Maximum Output	Factor	380V/220V
	Setting range	**200V—500V/100V—250V**	

Maximum output voltage is the corresponding maximum output voltage to basic running frequency fb, generally motor rated voltage. It is valid for V/F control mode to adjust output voltage, but invalid for vector control mode.

P0.10	Inverter Model Selection	Factory Setting	0
	Setting range	**0**:M model	

This parameter the user can not be changed, otherwise,it may lead to Inverter current show does not right.

P0.11	Torque Boost Operation		Factory Setting	0
	Setting range	**0**	**By hand**	

		1	**Auto**

Torque boost can improve the torque performance of V/F control at low speed. Invalid for vector control mode.

0：By hand

Torque boost voltage is determined by P0.12.

1：Auto

Torque boost voltage is determined by stator current. The bigger the current, the larger the value.

When it is set to auto torque boost, it can avoid saturable magnetic circuit caused by over torque boost voltage during too light load, therefore motor overheat caused by low speed run will be avoided.

Torque boost is determined by load, the heavier the load, the larger the value. This value should not be too large, otherwise the motor would over excite, be overheat or the inverter would be tripped by over-current or over-load.

P0.12	Torque Boost Setting	Factory Setting	Model Setting
	Setting range	**0—30%**	

Torque boost can improve the torque voltage of V/F control at low speed. Please see Figure 4-1.

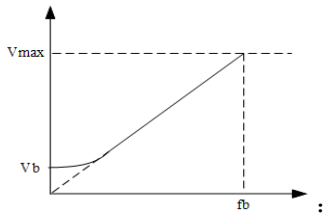

:

Fig4-1 Torque boost setting

P0.13	Slip Frequency Compensation	Factory Setting	0.0%
	Setting range	**0.0—150.0%**	

Load change maybe takes effects on motor slip frequency. This parameter is used to adjust inverter output frequency according to load automatically. If inverter runs with 50Hz rated current, motor speed must be lower than the corresponding to 50Hz- speed. Then if you will increase motor speed, you must select this parameter.

Notice: Valid only when P0.00=1.

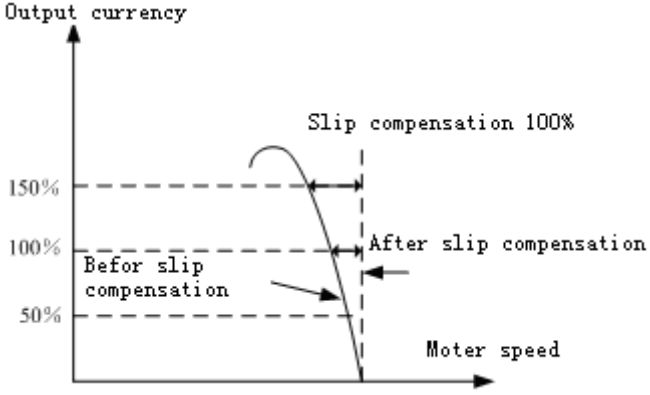

Figure 42 Slip Frequency Compensation Diagram

P0.14	Acceleration Time 1	Factory Setting	Model
P0.15	Deceleration Time 1	Factory Setting	Model
	Setting range	**0.1—3600s**	

Acceleration time is the time of accelerating from 0Hz to reference frequency, please see its symbol t1 below. Deceleration time is the time of decelerating from reference frequency to 0Hz, please see its symbol t2 below.

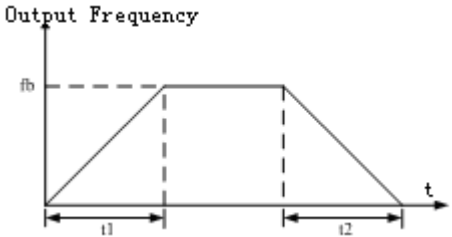

Figure 43 Acceleration and Deceleration time

P0.16	V/F Curve Selection	Factory Setting	0
P0.09	**Setting range**	**0-3**	

Notice：Valid only when P0.00=1, This set of parameters is valid.

P0.17	V/F Frequency F1	Factory Setting	12.50Hz
	Setting range	**0.00—Frequency F2**	
P0.18	V/F Voltage V1	Factory Setting	25.0%
	Setting range	**0.0—Voltage V2**	
P0.19	V/F Frequency F2	Factory Setting	25.00Hz
	Setting range	**频率值 F1—Frequency F3**	
P0.20	V/F Voltage V2	Factory Setting	50.0%
	Setting range	**Voltage V1—Voltage V3**	
P0.21	V/F Frequency F3	Factory Setting	37.50Hz
	Setting range	**Frequency F2—Basic Running Frequency**	
P0.22	V/F电压值V2	Factory Setting	75.0%
	Setting range	**Voltage V2—100.0%**	

This function parameters are used in flexible configuration VF curve of user needs.

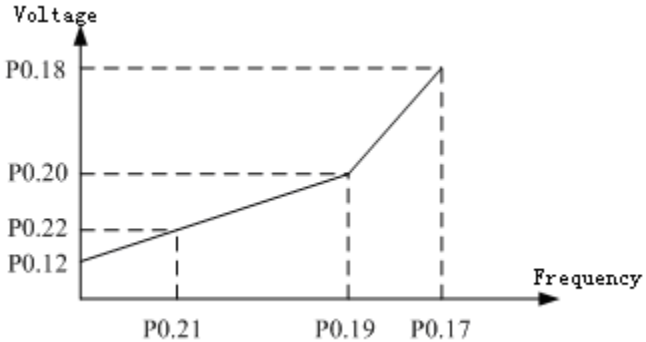

Figure 44 V/F User-defined Curve

P0.23	REV/JOG Function Selection		Factory Setting	1
	Setting range	**0**	**REV**	
		1	**JOG**	

REV/JOG is a multifunctional key, whose function can be defined by the value of P0.23.

4.2 Parameter Group—Motor and Vector Control

P1.00	Motor Rated Voltage	Factory Setting	380V/220V
	Setting	**200V—500V/100V—250V**	
P1.01	Motor Rated Current	Factory Setting	Model Setting
	Setting	**0.1—500.0A**	
P1.02	Motor Rated Speed	Factory Setting	Model Setting
	Setting	**300—3000RPM**	
P1.03	Motor Rated	Factory Setting	50.00Hz
	Setting	**1.00—400.00Hz**	
P1.04	Motor Current	Factory Setting	0.1A
	Setting range	**0.1—500.0A**	

P1.05	Motor Stator Resistance	Factory Setting	Model
	Setting range	**0.001—10.000Ω**	

P1.06	Motor Rotor Resistance	Factory Setting	Model Setting
	Setting range	**0.001—10.000Ω**	
P1.07	Motor Leakage Inductance	Factory Setting	Model Setting
	Setting range	**0.01—600.00mH**	
P1.08	Motor Mutual Inductance	Factory Setting	Model Setting
	Setting range	**0.01—600.00mH**	
P1.09	Reserved		

Notice:

When run motor parameters autotuning, please ensure to input motor name-plate parameters accurately. When the power rating of inverter do not match with motor and run vector control mode without parameters autotuning, it may deteriorate the control performance of inverter.

P1.10	Slip Compensation Coefficient	Factory Setting	1.00
	Setting range	**0.50—2.00**	

It is used to control motor speed accuracy in vector control status without speed sensor. When increase motor load, will increase this parameter to add motor speed; when decrease motor load, will decrease this parameter.

P1.11	Motor Pre-excitation Selection	Factory Setting	0
	Setting range	**0**	**Conditionally valid**
		1	**Always valid**

When motor power off and power on to start, in order to get enough starting torque, it must set up air gap magnetic flux at first.

P1.12	Motor Pre-excitation Duration	Factory Setting	0.2
	Setting range	**0.1～10.0S**	

This parameter is used to set motor pre-excitation duration in vector control mode. In pre-excitation status, motor will run with rated-excitation current, which is similar to DC braking mode.

P1.13	Motor Parameters Autotuning	Factory Setting	0
	Setting range	**0**	**No action**
		1	**Static Autotuning**

0：No action

1：Static Autotuning

When it is set to 0, once press, it will run motor parameters autotuning automatically by system. It needs no mutual action. During performing autotuning, inverter does not react to other running commands. After autotuning, this parameter will be reset to 0, and parameters record through autotuning will be saved in inverter control board, which means, parameters in P1.05-P1.08 will be updated conditionally.

Notice： This parameter valid only when in vector control mode(P0.00=0) and keypad source command (P0.04=0).

P1.14	ASR Proportional Gain	Factory Setting	1.00
	Setting range	**0.01～5.00**	
P1.15	ASR Integral Time	Factory Setting	2.00S
	Setting range	**0.01～10.00S**	

Above parameters are valid for vector control mode, invalid for V/F control mode.

The system's dynamic response can be faster if the proportion gain is increased. However, if proportion gain is too large, the system tends to oscillate. The system's dynamic response can be faster if the integral time is decreased. However, if it is too small, the system becomes overshoot and tends to oscillate. Ensure to increase the proportional gain and reduce the integral time as far as possible without creating oscillation, so that better system dynamic response suitably.

4.3 Parameter group—Start and Stop Control

P2.00	Start Mode			Factory Setting	0
	Setting range	0	Start frequency directly		
		1	Speed tracking and start		
P2.01	Starting Frequency			Factory Setting	0.00Hz
	Setting range	0.00—10.00Hz			
P2.02	Hold Time Of Starting Frequency			Factory Setting	0.0s
	Setting range	0.0～10.0s			

0：Start frequency directly

Most motors use the start mode "start directly", its starting parameters setting please refer to P2.01 and P2.02 above. For system which needs high starting torque, user can use starting frequency to increase torque. Hold time of starting frequency refers to Duration of starting frequency. Please adjust it according to the actual situation. When it is set to 0, it means, starting frequency invalid and motor will start from 0HZ. Parameters for DC Braking Current before Start and DC Braking time Before Start please refer to P2.03 and P2.04.

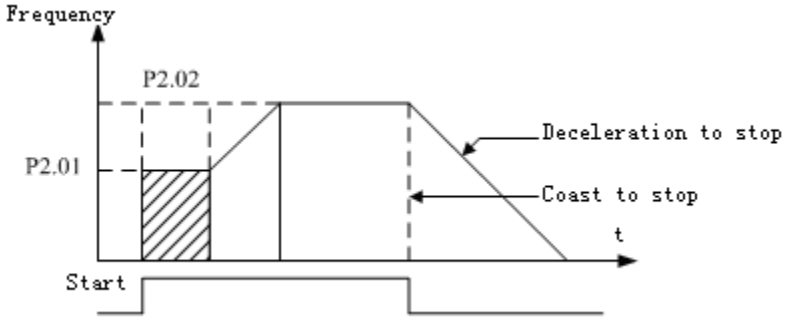

Figure 45 Starting and Stopping Diagram

P2.03	DC Braking Current Before Start	Factory Setting	0.0%
	Setting range	**0—100.0%**	
P2.04	DC Braking Time Before Start	Factory Setting	0.0s
	Setting range	**0.0—30.0s**	

DC braking current before start is the percentage of rated current of inverter when inverter performs DC braking to start.

DC braking time before start refers to DC braking current duration before start.
When it is set to 0s, this function valid. When P2.03 and P2.04 are selected, inverter performs DC braking according to P2.03 firstly, then start to accelerate after P2.04 to running frequency.

Notice：Valid only when P0.00=1

P2.05	Acceleration / Deceleration Mode		Factory Setting	0
	Setting range	0	Linear	
		1	S curve	

0：Linear

Output frequency will increase or decrease with fixed acceleration or deceleration time. Output frequency is linear correlated with ACC / DCC time. It is applicable for most motors.

1：S curve

Output frequency will increase or decrease according to S curve. Please refer to Figure 6-7. This function is widely used to reduce noise and vibration during acceleration and deceleration and smooth stop and stop. For details, please refer to description of P2.06 and P2.07.

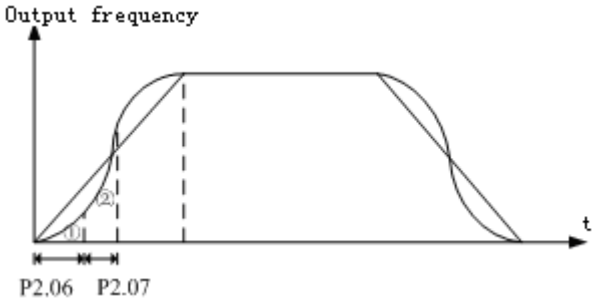

Figure 46 S Curve Diagram

P2.06	Start Section of S Curve		Factory Setting	20.0%
	Setting range	10.0—40.0%		

P2.07	Raise and Fall Section of S Curve		Factory Setting	60.0%
	Setting range	**10.0—40.0%**		

P2.08	AVR Function		Factory Setting	1
	Setting range	**0**	**Disabled**	
		1	**Enabled**	

During deceleration, if AVR function is disabled, the deceleration time will be short but the current will be big. If AVR function is enabled, the deceleration time will be long but the current will be small.

P2.09	Auto Energy Saving Selection		Factory	0
	Setting range	**0**	**Disabled**	
		1	**Enabled**	

Notice:

It is suitable for Pumps and draught fans etc.

P2.10	Dead Time of FWD / REV		Factory Setting	0.0s
	Setting range	**0.1—10.0s**		

When inverter is in the running Status, set the hold time t1 at zero frequency in the transition between forward and reverse running. It is shown as following figure.

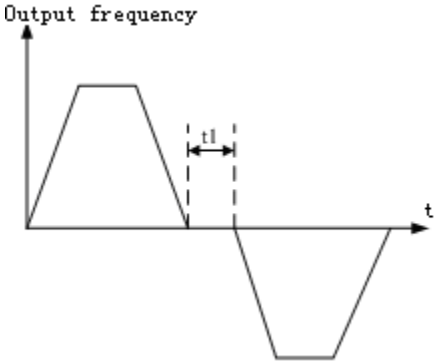

Table 4-7 FWD / REV Dead Time Diagram

P2.11	Stop Mode		Factory Setting	0
	Setting range	0	Deceleration to stop	
		1	Coast to stop	

0：Deceleration to stop

When the stop command takes effect, the inverter decreases the output frequency and stop when frequency to 0.

If inverter selects DC braking function, it will brake when DC braking frequency is reached, and then stop.

1：Coast to stop

When the stop command takes effect, the inverter blocks the output immediately. The motor coasts to stop by its mechanical inertia.

P2.12	Starting Frequency of DC Braking	Factory Setting	0.00Hz
	Setting range	**0.0—20.00Hz**	
P2.13	DC Braking Current	Factory Setting	0.0%
	Setting range	**0.0—100.0%**	
P2.14	DC Braking Time	Factory Setting	0.0s
	Setting range	**0.0—30.0s**	

These parameters are used to select DC braking parameters when inverter stops.

P2.12 refers to starting frequency of DC braking during deceleration to stop;

P2.13 refers to percentage of output frequency of DC braking during deceleration to stop to inverter rated output current;

P2.14 refers to DC braking Duration. When it is set to 0.0s, it means no DC braking process.

P2.15	Restart After Power Off		Factory Setting	0
	Setting range	**0**	**Disabled**	
		1	**Start frequency directly**	
		2	**Speed tracking and start**	
P2.16	Delay Time For Restart		Factory Setting	0.5s
	Setting range	**0.0—20.0s**		

0: Inverter will not automatically restart when power on again until run command takes effect.

1: When inverter is running, after power off and power on again, inverter will start the motor at the starting frequency after delay time defined by P2.16 .

2: When inverter is running, after power off and power on again, inverter will do speed tracking and start the motor after delay time defined by P2.16. During delay time , any commands will be invalid. When stop command is selected, the inverter will restore form speed tracking to stop status automatically.

Notice： Setting this parameter will cause unexpected motor start which may affect external equipments and staffs. Please be cautious to use.

P2.17	Auto Reset Times	Factory Setting	0
	Setting range	**0-10**	
P2.18	Reseting Interval	Factory Setting	3.0s
	Setting range	**0.5-25.0s**	

When there are faults during running status, the inverter will stop to output and show faults code. After resetting interval of P2.18, the inverter will reset the fault automatically and run again.

Auto reset times is determined by P2.17. When P2.17 is set to be 0, it means auto reset is disabled and mutual reset is enabled by STOP/RESET) .

This function is valid for some faults such as over heat or over load.

P2.19	Jog Frequency	Factory Setting	10.00Hz
	Setting range	**0.00—50.00Hz**	
P2.20	Jog Acceleration Time	Factory Setting	Model Setting
P2.21	Jog Deceleration Time	Factory Setting	Model Setting
	Setting range	**0.1—3600s**	

All above parameters define relevant parameters in jog running status. See below please：

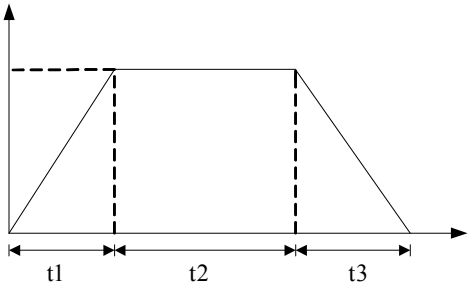

Figure 4-8 Jog Frequency Diagram

t_1 is actual jog acceleration time，t_3 is actual jog deceleration time，t_2 is jog running time，f_1 is the jog running frequency.

It is noticeable that P2.20 and P2.21 preset the acceleration and deceleration time based on 50Hz jog frequency, but factory setting value of jog frequency is 10Hz, so user can do the conversion proportionally and actual acceleration / deceleration time is 20% of the setting value in P2.20 and P2.21.

Moreover, user can use operation keypad, control terminals or host to run jog command.

P2.22	Acceleration Time 2	Factory Setting	Model Setting
P2.23	Deceleration Time 2	Factory Setting	Model Setting
P2.24	Acceleration Time 3	Factory Setting	Model Setting
P2.25	Deceleration Time 3	Factory Setting	Model Setting
P2.26	Acceleration Time 4	Factory Setting	Model Setting

P2.27	Deceleration Time 4	Factory Setting	Model Setting
	Setting range	**0.1-3600s**	

Unit selection of all above parameters please refer to description of P3.09.

These Parameters are used to preset the ACC / DEC time 2、3、4.

ACC / DEC time 1、2、3、4(in P0.14 and P0.15 defined as ACC / DEC 1) can be set by combination of control terminals as the inverter acceleration and deceleration time in running status. User can use parameter group P4.00-P4.0 to select these corresponding terminals.

P2.28	Multi-step speed 1	Factory Setting	5.00Hz
P2.29	Multi-step speed 2	Factory Setting	10.00Hz
P2.30	Multi-step speed 3	Factory Setting	15.00Hz
P2.31	Multi-step speed 4	Factory Setting	20.00Hz
P2.32	Multi-step speed 5	Factory Setting	25.00Hz
P2.33	Multi-step speed 6	Factory Setting	30.00Hz
P2.34	Multi-step speed 7	Factory Setting	40.00Hz
P2.35	Reserved		
	Setting range	**0.00-Upper frequency limit**	

Above parameters are used to select running frequency of multi-step speed 1～7. For Details, please refer to P7.00.

P2.36	Skip Frequency 1	Factory Setting	0.00Hz
P2.38	Skip Frequency 2	Factory Setting	0.00Hz
P2.40	Skip Frequency 3	Factory Setting	0.00Hz
	Setting range	**0.0—Upper frequency limit**	
P2.37	Skip Frequency Bandwidth 1	Factory Setting	0.00Hz

P2.39	Skip Frequency Bandwidth 2	Factory Setting	0.00Hz
P2.41	Skip Frequency Bandwidth 3	Factory Setting	0.00Hz
	Setting range	**0.0—10.0Hz**	

By means of setting skip frequency, the inverter can keep away from the mechanical resonance points with the load. Once these resonance points are set, inverter can keep away from the points automatically and run smoothly. But inverter frequency will transmit through these points. Three resonance points are set together. When setting range is 0, the skip function of resonance points is invalid and inverter frequency skip run near to some points. See Figure 6-10 please.

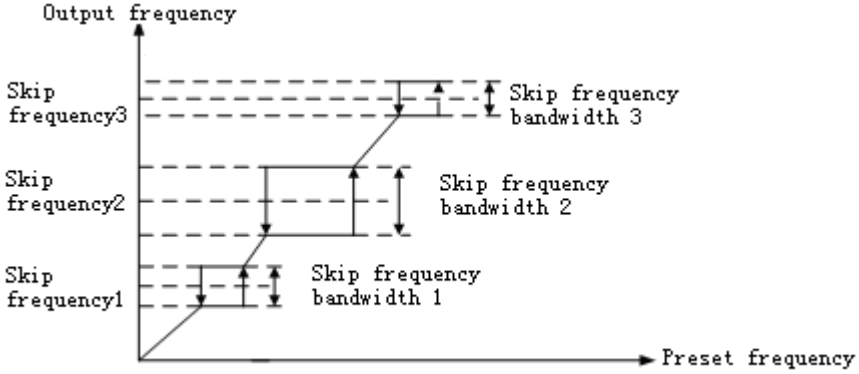

Figure 49 Skip Frequency Diagram

P2.42	Carrier Frequency	Factory Setting	Model Setting
	Setting range	**1.0—12.0KHz**	

This parameter is used to set carrier frequency of PMC.

Carrier frequency will lower the noise of inverter motor. In some circumstances which require mute running, it can be suitably increased. But if the carrier frequency exceeds the factory setting, it will cause higher temperature rise of inverter and stronger electromagnetic interference, so adjust it cautiously please .

When carrier frequency is set to above, if increase it 1 kHz, the inverter output frequency will increase 5% accordingly.

P2.43	PWM Mode		Factory Setting	1
	Setting range	0	Fixed	
		1	Random	

0：Fixed

1：Random

When mode is set to random, carrier frequency will be adjusted automatically during variation of frequency in order to better pulsation of low frequency torque.

4.4 Parameter Group—Display Interface

P3.00	Reservations

P3.01	Parameters Restore		Factory Setting	0
	Setting range	0	No action	
		1	Restore factory setting	
		2	Clear fault records	

0：No action

Inverter is in the status which user can read and write parameters.

1：Restore factory setting

Inverter restores all parameters to factory setting in PO-PA groups.

Notice:

This function code is invalid for P0.00，P0.01，P0.04，P0.10 groups. These main parameters are only adjusted by hand. And this function code will clear all records after motor parameters autotuning. So it is needed to run autotuning again when in the vector control mode.

2：Clear fault records

Inverter clears all fault records.

P3.02	Parameters Write-Protect		Factory Setting	0
	Setting range	0	**Permit to change all Parameters**	
		1	**Permit to change parameters of frenquency**	
		2	**Forbid to do changes**	

0：Permit to change all Parameters

Notice：In the running status, some parameters can not be changed. For details, please refer to *list of function parameters.*

1：Permit to change parameters of frequency

2：Forbid to do changes

This function code is used to forbid others to change inverter parameters setting.

P3.03	Factory Password		Factory Setting	0
	Setting range	0—9999		

P3.04	Control Data 1		Factory Setting	0
	Setting range	**0—18**		
P3.05	Control Data 2		Factory Setting	1
	Setting range	**0—18**		

It determines display of control board in control status, that is, display on LED and LCD. Control Data 1 is showed on LED and control data 2 in the left-under angular region of LCD panel.

P3.06	Linear Velocity Coefficient		Factory Setting	1.00
	Setting range	**0.01—100.0**		

When displayed velocity is linear velocity, it will be calculated by the following equation：
Linear Velocity = **Frequency** Linear Velocity Coefficient

P3.07	Closed-loop Display Coefficient		Factory Setting	1.00
	Setting range	**0.01—100.0**		

PID Feedback / Preset Value= Closed-loop Display Coefficient **Actual Feedback / Preset Value**

P3.08	Program Version		Factory Setting	
	Setting range	**0—99.99**		

This parameter can show the version number of program.

P3.09	Acceleration/Deceleration Speed Time		Factory Setting	**0**
	Setting range	**0**	**Second**
		1	**Minute**

0：Second
1：Minute

This Parameter is set for acceleration and deceleration speed time and defaulted as second.

4.5 Parameters Group—Input and Output

P4.00	Input Terminal DI1 Function	Factory Setting	0
P4.01	Input Terminal DI2 Function	Factory Setting	0
P4.02	Input Terminal DI3 Function	Factory Setting	0
P4.03	Input Terminal DI4 Function	Factory Setting	0
P4.04	Input Terminal DI5 Function	Factory Setting	0
P4.05	Input Terminal DI6 Function	Factory Setting	0
	Setting range	**0—30(Detailed description see below please)**	

0：Control terminals unused

1：Multi-Step Speed Selection 1

2：Multi-Step Speed Selection 2

3：Multi-Step Speed Selection 3

User will use ON/OFF combinations of multi-step speed terminals to chose output step speed, see Table 4-3 please：

Multi-Step Speed Reference 3	Multi-Step Speed Reference 2	Multi-Step Speed Reference 1	Step Speed
OFF	**OFF**	**OFF**	**Normal Running Frequency**
OFF	**OFF**	**ON**	**1**
OFF	**ON**	**OFF**	**2**
OFF	**ON**	**ON**	**3**

ON	**OFF**	**OFF**	**4**
ON	**OFF**	**ON**	**5**
ON	**ON**	**OFF**	**6**
ON	**ON**	**ON**	**7**

Tabel 4-3

4：ACC **/ DCC Time** 1

5：ACC **/ DCC Time** 2

Use different combinations of ON/OFF and **ACC / DCC Time** to achieve 4 selections of **ACC / DCC Time.** See Table 6-4 please：

ACC **/ DCC Time** 2	ACC **/ DCC Time 1**	ACC **/ DCC Time**
OFF	OFF	1
OFF	ON	2
ON	OFF	3
ON	ON	4

Table 4-4

6：Frequency Source Selection 1

7：Frequency Source Selection 2

8：Frequency Source Selection 3

When frequency input source is set to external terminals (P0.01=8), inverter frequency source preset is determined by above three terminals. For details, see please Table 6-1.

9：Jog Forward

It is used to run jog forward in external terminals control status.

10：Jog Reverse

It is used to run jog reverse in external terminals control status.

Jog forward is prior to jog reverse and only jog forward is valid when both are in closing status simultaneously.

11：Coast to Stop

It is applicable for coast to stop in external terminals control status. When closing, inverter will coast to stop, when opening, it will start from speed tracking.

12：Frequency Up Command

It is used to increase frequency.

13：Frequency Down Command

It is used to decrease frequency.

14：External Fault Input（Opening status，valid when Closing）

Using this terminal to input fault signals of external devices, it will be easier for fault control of these devices.

15：3-Wire Control

When P0.04=1 and terminals Control Mode is 3-wire control mode, this parameter will set this external terminal as inverter stop trigger switch. For reasons, please refer to description of P4.06.

16：DC Braking Command

In the stopping status, if this parameter defined terminal is closing, namely output frequency is lower than DC braking frequency before start, it will run DC braking command to achieve opening the terminal. For details ,please refer to description of P2.12-P2.14

17：Counter 0 Reset Input

It is used to reset 0 of built-in counter, and can be used together with function 18.

18：Counter Trigger Signal Input

It is the built-in pulse input port of counter.

19：External Pulse Input

This terminal receives external pulse signal to preset frequency. For details, please refer to parameters group P5.04 and P5.05.

Notice：

1． Function 18 and 19 are only enabled by DI6.

2．Maximum frequency of input pulse is 20KHz，Voltage is lower level 0V，upper level 18~26V.

20：Reset Fault (RESET)

When inverter malfunctions, it can be used to reset fault. This function is same as function of STOP/RESET.

21：UP/DOWN Frequency Terminal 0 Reset

When frequency preset source selection can be set to valid UP/DOWN, User can use UP/DOWN to reset current running frequency to 0.

22：PID

When PID run command is set to valid terminal, PID is enabled only when terminal is enabled.

23：PLC

When PLC run command is set to valid terminal PLC is enabled only when terminal is enabled.

24：Traverse Operation

When traverse run command is set to terminal valid, traverse operation is enabled only when terminal is enabled.

25：Reset Traverse Operation

When run the traverse operation automatically or by hand, closing this terminal will reset all traverse records. Then open the terminal, will restart traverse operation.

26：External Stop Command

This Command is valid for all run commands. When it is valid, inverter will stop in the selected mode of P2.11.

27：Inverter Running Inhibit Command

When this terminal is enabled, running inverter will coast to stop. It is forbidden to start during stand-by. It is suitable for application which requires safe linkage.

28：Inverter ACC **/ DCC Inhibit Command**

It is used to maintain current running speed despite of external signal interferences(except for stop command).

29：Switch between Running Command and Terminal Command

It is used to achieve switch from running command source to external terminal source. When closing the terminal, it will be restored to previous running command source.

30：Switch between Frequency Source Command and AI2

It is used to achieve switch from frequency preset source to AI2 preset. When closing the terminal, it will be restored to previous frequency preset source.

P4.06	FWD/REV Control Mode		Factory Setting	0
	Setting range	0	2-Wire Control Mode 1	
		1	2-Wire Control Mode 2	
		2	3-Wire Control Mode 1	
		3	3-Wire Control Mode 2(Reserved)	

0：2-Wire Control Mode 1

Please see Figure 4-10 (Default mode)：

K2	K1	Run command
0	0	Stop
1	0	Rev
0	1	Fwd
1	1	Stop

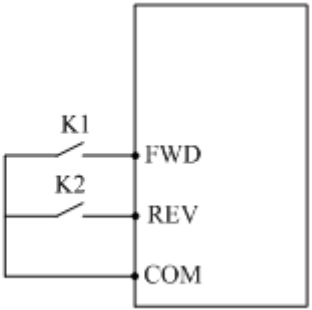

Figure 4-10 2-Wire Control Mode 1

1：2-Wire Control Mode 1

Please see Figure 6-12：

K2	K1	Run command
0	0	Stop
1	0	Stop
0	1	Fwd
1	1	Rev

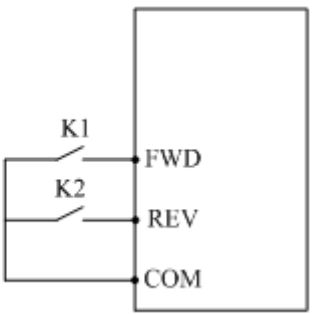

Figure 4-11 2-Wire Control Mode 2

2：3-Wire Control Mode 1

Please see Figure 4-12 as below. Terminal DIi is the 3-wire control mode terminal of DI1 to DI6.

SB2—Forward run button(Opening)

SB1—Stop button (Closing)

SB3—Reverse run button(Opening)

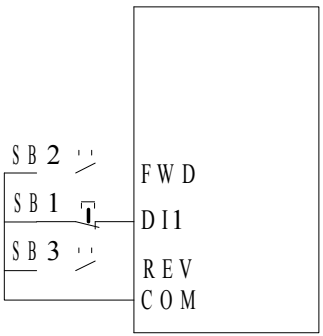

Fig. 4-12 3-wire control mode 1

3 line control model 2

3 line control model 2(fig.6-14). Dli is operating control terminal of 3-wire type. To select any of the input terminal among DI1-DI6.
SB2- operating switch(normally open)
SB1- stop switch(normally closed)

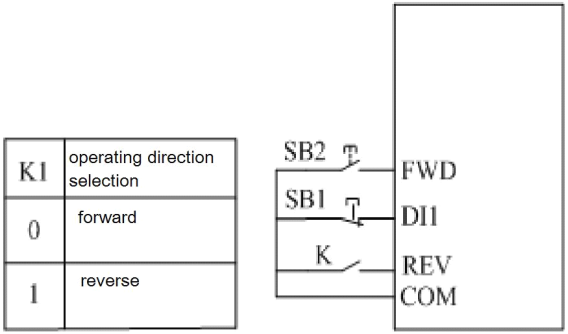

Fig.4-13 3-wire type control mode 2

P4.07	open-circuit collector input terminal DO1 setting	factory default	0
P4.08	open-circuit collector input terminal DO2 setting	Factory default	1

P4.09	programmable relay output		Factory default	15
	setting rangesetting range	**0-15 (please find below description for details)**		

0：Operation status indication of inverter.

When inverter is in the status of operation, effective signal will be output; otherwise, non-effective signal will be output.

1：frequency/speed arrival signal(FAR)

Please see description in contant P4.12

2: frequency/speed leve detection signal (FDT)

Please see description in contant P4.12

3: frequency zero-speed operation indication

It refers to the output signal when the inverter is in the status of operation,but output frequency is 0.00Hz

4: halt in the event of exterior equipment's fault.

During the operation of inverter, when the switch value input terminal receives exterior equipment fault signal, the inverter will be stoped and the cooresponding signal will be output.

5: output frequency reaches upper limit.

This is the singal output when the the operation frequency reaches up limit.

6:. output frequency reaches lower limit.

This is the singal output when the the operation frequency reaches lower limit.

7: one operation period of programmable multi-step speed ends.

When one period of PLC operation ends, this terminal will output the relative signal.(single pulse singal, signal width 500mS)

8:.inverter overload alarm signal

In the event that the oupput current exceeds the overload alarm level, the alarm signal will be output after the set alarm delay time.

9:. inverter is power on

When the inverter is power on without fault, the bus voltage is in a normal status, the prohibition function of terminal operation is ineffective, and operation command start is acceptable, than the cooresponding signal will be output.

10: counter detection signal output.

Please see the description in constant P4.16

11: counter reset signal output

Please see the description in constant P4.15.

12: inverter fault

When the inverter's operation stopped at fault, the effective signal will be output, i.e. low level. Normally it is a status of high impedance.

13: under-voltage lockout outage

When the DC bus voltage is lower than the permited voltage level, the corresponding signal will be output, meanwhile, *POFF* will be displayed.

14: upper and lower limit of transverse frequency

In the course of transverse operation,when the frequency fluctuation to the center frequency is beyond the upper limit P 0.06 and lower limit P0.07, the corresponding frequency will be output.

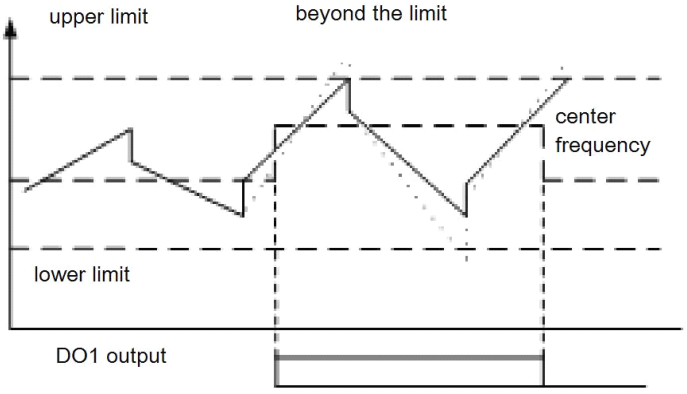

Fig 4-14transverse operation upper and lower limit schematic

15: programmable multi-step speed staged operation ends.

A effective pulse signal will be output when the current stage operation of PLC ends. The signal width is 500mS.

Note:D)1,DO2 output effective signal is low level(but the power supply should be increased to be 24 by by resistor.

P4.10	FDT level setting	factory default factory default	0.00Hz

	setting range setting range	**0.00Hz— upper limit frequency**		
P4.11	FDT Delay Value		factory default Factory setting	1.00Hz
	setting range Setting range	**0.00Hz—30.00Hz**		

This group of constant will be used to set frequency detetion level. When output frequency rises and exceeds the setting of FDT, open-circuit collector singal will be output, when output frequency declines to be lower than FDT delayed value, the output will be high-impedance state. Please see fig.4-15.

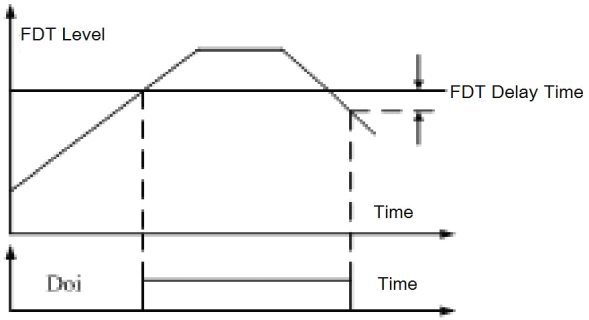

Fig 4-15 FDT Setting Illustration

P4.12	frequency arrives FAR detection width	factory default	0.00Hz
	setting range **Setting range**	**0.00—15.00Hz**	

When inverter's output frequency is within the detection range, the selected output terminal will output open-circuit collector signal, see fig.4-16

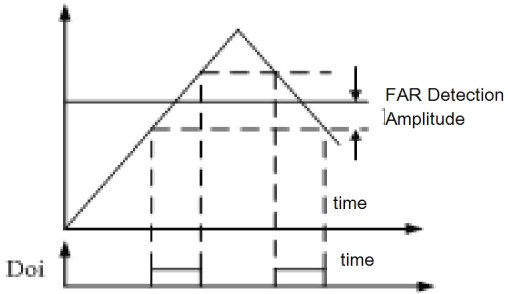

Fig 4-16 FAR Setting Description

P4.13	overload pre-alarm level	factory default	100%
	setting range	**20—120%**	
P4.14	overload pre-alarm delay	factory default	1.0S

	setting range	**0.0～15.0s**

Overload pre-alarm level defines the current threshold of overload pre-alarm operation. The setting range is a percentage of rated current with rated current taken as 100%. Normally overload pre-alarm level's setting should be lower than the thermorelay protection level. When the output current comes to the overload pre-alarm level and the dwelling time is longer than the set olverload pre-alarm delay time, the over-load pre-alarm will act.

P4.15	Counter reset value setting	factory default	1
	setting range	**0—9999**	
P4.16	counter detection value setting	factory default	1
	setting range	**0—F4.15**	

This group of constants define the counter's work, the clock terminal of couter is input via exterior teriminal X6. When the couter's count value to the exterior clock reaches the defined value in P4.15, the cooresponding multi-functional output terminal(counter reset signal output) will output a signal with its width eaqual to the exterior effective signal period and the couter's value will come back to Zero.

When the counter's counting value reaches to the value defined in P4.16, the cooresponding multi-functional output terminal(counter dectection signal output) will output effective singal. If the the couter continue to count and the value excceds the set value in constant P4.15, the coutner will come back to zero and the signal will be withdraw.

.

4.6: analog input and output constant group.

P5.00	AI1 input lower-limit voltage	factory default	0.0V
	setting range	**0.0—F5.01**	
P5.01	AI1 input upper-limit voltage	factory default	10.0V
	setting range	**P5.00—10.0V**	

The above contant defines the range of analog voltage channel AI1. It should be set according to the actual situation of input signal.

P5.02	AI2 input lower-imit current	factory default	0.0mA
	setting range	**0.0—P5.03**	
P5.03	AI2 input upper-limit current	factory default	20.0mA
	setting range	**P5.02—20.0mA**	

The above contants defines the range of analog current channel AI2, it should be set according to the actual input signal.

Note:

Normally, AI2 port is for current input. But if necessary, it can also be used as voltage input port. It can be selected by the wire jumper JP1 on the control board. The mathematic correspondence between them is that each 20.0mA is equal to 10.0V.

P5.04	exterior pulse input lower-limit frequency	factory default	0.0kHz
	setting range	**0.0—P5.05**	

P5.05	Exterior pulse input upper-limit frequency	factory default	10.0kHz
	setting range	**P5.04—20.0KHz**	

The above constants define the frequency rang of exterior pulse signal.

P5.06	frequency setting for min. input	factory default	0.00Hz
	setting range	**0.0Hz—upper limit frequency**	
P5.07	Frequency setting for max. input	factory default	50.00Hz
	setting range	**0.0Hz— upper-limit frequency**	

This group of contants are used to set the correspondence between exterior input value and frequency setting value. After the frequency setting signal is accepted the disposal of filtering and gain, its correspondence with frequency setting is described as below fig. Either of the two kinds of singal can independently achieve the characteristics of forward operation and reverse operation. Fmax and fmin is respectively the corresponding frequency for mx. input analog and the corresponding frequency for min. input.

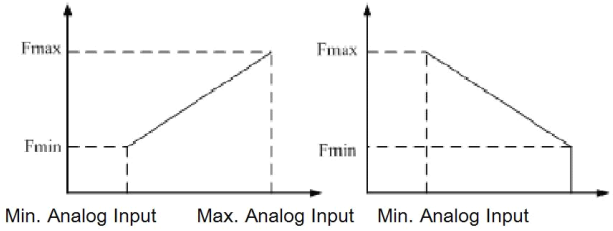

Fig.4-17 The corresponding frequency setting value of Max. and Min. Analog input

P5.08	Anolog input signal delay time		factory default	0.5s
	setting range	**0.1—5.0s**		

This constant will implement disposal of filtering on AI1,AI2 and the input signal of keyboard protentiometer according to the set delay time in order to eliminate the influence of disturbing signal. Nevertherless the too long delay time will reduce the response time of the set signal.

P5.09	AO1 multi-functional analog output terminal function selection	factory default	0
P5.10	DO3 multi-fucntional pulse output terminal function selection	factory default	2

setting range	0	**output frequency**
	1	**frequency setting**
	2	**output current**
	3	**motor speed**
	4	**output voltage**
	5	**bus voltage**
	6	**PID set value**
	7	**PID feedback value**

AO1 is multifunctional analog value output terminal ,DO3 is multifunctional pulse output terminal, the function setting is as follows:

0：output frequency

Analog output amplitude or pulse output frequency is proportional to the inverter's output frequency.

AO1：（ 0-AO1 upper limit value）～（0.00- upper limit frequency）

DO3：（ 0-DO3 upper limit value）～（0.00-upper limit frequency）

1： frequency setting.

Analog output width or pulse output frequency is proportional to the set frequency.

DO3: (0-DO3 upper limit)-(0.00- set frequency)

2： output current

Analog output with or pulse output frequency is proportional to the output current of inverter.

3： motor speed

Analog output width or pulse output frequency is proportional to the motor speed of inverter
AO1: (0-AO1 upper limit)- (0-motor’s synchronous speed)
DO3: (0-DO3 upper limit)-(0-motor’s synchronous speed)

4：output voltage

Analog output width or pulse output frequency is proportional to the bus voltage of inverter.
AO1: (0-AO1 upper limit)- (0-max./rated output voltage)
DO3: (0-DO3 upper limit)-(0-max./rated output voltage)

5：bus voltage

Analog output width or pulse output frequency is proportional to the bus voltage of inverter
AO1: (0-AO1 upper limit)-(0-800V)
DO3☹0-DO3 uppoer limit)- (0-800V)

6：PID set value

Analog output amplitude or pulse output frequency is proportional to the set value of PID.
AO1：（ 0- AO1upper limit value）～（0.00-10.00V）
DO3：（ 0- DO3upper limit value）～（0.00-10.00V）
7:PID feedback value
Analog output width or pulse output frequency is proportional to PID feedback value.

AO1：（ 0- AO1 upper limit）～（0.00-10.00V）
DO3：（ 0- DO3 upper limit）～（0.00-10.00V）

P5.11	AO1 1 gain setting	factory default	100%
	setting	**20—200%**	
P5.13	DO3 gain setting	factory default	100%
	setting	**20—200%**	
P5.12	disabled		
P5.14	disabled		

Contant P5.11 defines the upper limit value of analog output AO2, when the factory default is 100% and output voltage/current's range is 0-10V/0-20mA, voltage and current output will be selected by JP2 jumper.

Contant P5.13 defines the upper limit of pulse output DO3, when the factory default vaule is 100%, output frequency range is 0-10KHz.

AO1output=**(0-10V/0-20mA)×AO1 gain setting（the max. value will not bigger than 10V/20 mA ）**

DO3output=(0-10 KHz)×DO3 gain setting(Max.20 KHz）

P5.15	combination given channel setting	factory default	000
	setting	**000—666**	

LED units： operand **1**

0：keyboard potentiometer

1：digital setting
2：disabled
3：communication setting
4：AI1
5：AI2
6：terminal pulse

LED tens：operand **2**
0：keyboard potentiomete
1：digital setting 1
2: disabled
3：communication setting
4：AI1
5：AI2
6 :terminal pulse

LED hundreds：operand **3**
0：keyboard potentiomete
1：digital setting 1
2: disabled
3：communication setting
4：AI1
5：AI2
6 :terminal pulse

LED thousands：disabled

P5.16	combination given arithmetic setting		factory default	00
	setting	**00—54**		

LED units：arithmetic 1

0：plus

1：minus

2：absolute value（subtration）

3：to select the max. value

4：to select the min. value

LED tens：arithmetic 2

0：加　　1：minus

2：absolute value（subtration）

3：to select the max. value

4：to select the min. value

5：operand. 3 will not **participate in operation.**

LED hundreds：disabled

LED thousands：disabled

Note:only when P0.01=7,P5.15,P4.16 are effective.

P5.15，P5.16 define that when P0.01=7, the operational formula between every analog and digital input value is :

(operand 1)arithmetic 1(operand 2) arithmetic 2 (operand no.3)

If set the tens of P5.16's LED to be 5, operand 3 will not participate in operation, it will be operational combination with two operands(operands1 and operand 2)

Case 1:

If P5.15 is set to be 531 while P5.16 is set to be 10, the operational combination will be: {（digital setting 1+communication setting）－AI2}

Case 2:

When P5.15 is set to be 410 and P5.16 is set to be 21, the operational combination will be: |（keboard potentiometer value－digital set value）－AI1|

note：

Arithmetic rule 1: in any case, the operation sequence will be that operand 1 operates with operand 2 according to arithmetic 1, the result 1 operates with operand 3 according to arithmetic 2, then the final result will come out. If the operational result 1 of the former 2 digits is minus, this minus digit will be 0 by default

4.7 process PID control contant

P6.00	PID operation setting	factory default	00
	setting range	**00-11**	

LED units：function setup

0：close

1：open

LED tens：PID switch selection

0：automatic switch

1：manual switch by defined multi-functional terminal

LED hundreds：disabled

LED thousands：disabled

P6.01	PID setting channel selection		factory default	1
	setting range	0	keyboard potentiometer setting	
		1	digital setting	
		2	disabled	
		3	disabled	
		4	AI1setting	
		5	AI2 setting	
		6	Terminal pulse	
		7	AI1+AI2	
		8	AI1-AI2	
		9	MIN {AI1,AI2}	
		10	MAX {AI1,AI2}	

0：keyboard potentiometer setting

PID set value is decided by the potentiometer in the operation panel.

1. digital setting

PID set value is decided by digits, and set through constant P6.03.

2：disabled

3：disabled

4：AI1 setting

PID set value is given by exterior voltage signal AI1(0-10V)

5：AI2 setting

PID set value is given by exterior current signal AI2（0～20mA/0～10V）

6:terminal pulse

PID set value is defined by exterior pulse

7：AI1+AI2

Algebraic summation of AI1 and AI2

8：AI1-AI2

The difference between AI1 and AI2. If AI1 is less than or eaqual to AI2, the result will be 0.

9：MIN｛AI1,AI2｝

The smaller one between AI1 and AI2.

10：MAX｛AI1,AI2｝

The bigger one between AI1 and AI2

P6.02	feedback channel selection	factory default	4
	4	**AI1**	
	5	**AI2**	

	setting range	6	**Termial pulse**
		7	**AI1+AI2**
		8	**AI1-AI2**
		9	**MIN {AI1,AI2}**
		10	**MAX {AI1,AI2}**

.

P6.03	the setting of preset digital value	factory default	0.00V
	setting range	**0.00—10.00V**	

In the case that PID setting channel select the mode of digital setting, this contant are used to set PID's preset digital value.

P6.04	feedback chanel gain	factory default	1.00V
	setting range	**0.01—10.00**	

When feedback channel is different from the set channel level, this constant can perform gain adjustment on feedback singal.

P6.05	feedback channel polarity	factory default	0
	setting range	**0**	**positive characterics**
		1	**Negative characterics**

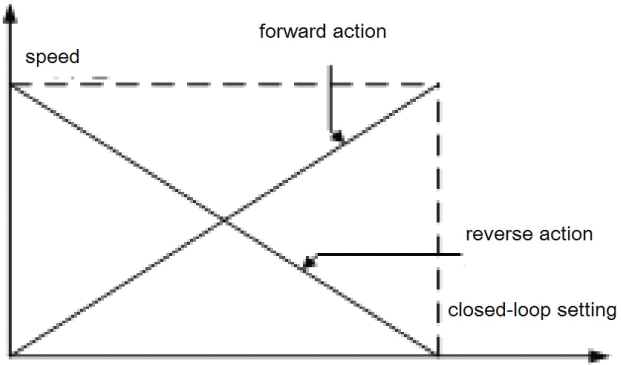

Fig.4-18 forward/reverse characteristics illustration

P6.06	Proportional gain P		factory default	1.00
	setting	**0.01—10.00**		
P6.07	integral time Ti		factory default	1.00s
	setting	**0.1—200.0s**		
P6.08	differential time Td		factory default	0.0s
	setting	**0.0—10.0s**		

The constants of Built-in PID should be set according to the system's characterics and actual demands.

Proportional gain P: It decides the whole PID's adjustment intensity. The bigger the P is, the stronger the intensity is.

Integral time Ti: To decide PID's integral adjustment time on the diviation of PID's feedback value from the set value.

Integration timeTd:to decide PID controller's adjustment intensity on the change rate of PID feedback value's deviation from the set value

Note: When P6.08=0.0, differential action is non-effective.

P6.09	sampling period T	factory	0.00s
	setting range	**0.00—10.00s**	

PID operates once in each period of system's sampling on feedback PID. If sampling period is long,then the response will be slow, however the suppressing effect will be better. Therefore, this constant should be set according to the actual situation on spot.

Note: when P6.09=0.00, sampling ends automaticly

P6.10	divation limit	factory	0.0%
	setting range	**0.0—20.0%**	

Divation limit is the ratio of the absolute value of the system's permited feedback value's diviation from the set value to the set value. When the ratio is lower than the set value of this constant, PID will not operate.

This function is mainly used in the system which has lower requirement on control precision and needs less times to be adjusted. The reasonable setting of this contant is infavor of inhancing the system's output stability.

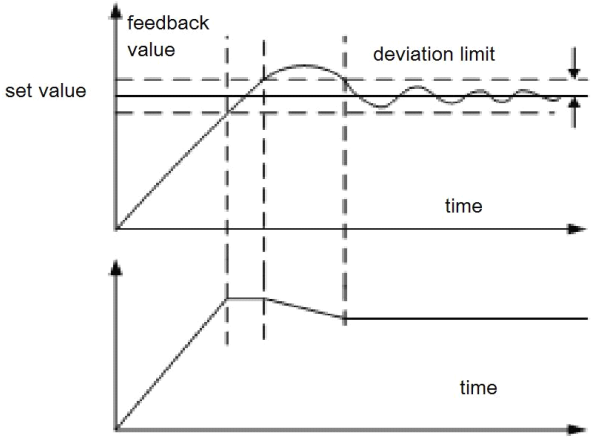

Fig.4-19 diviation limit schematic

P6.11	closed-loop preset frequency		factory	0.00Hz
	setting range	**0.0-upper limit frequency**		
P6.12	preset frequency dwell time		factory	0.0s
	setting range	**0.0—6000.0s**		

This constant defines inverter's preoperation frequency and time before the PID is put into operation when PID control is effective.

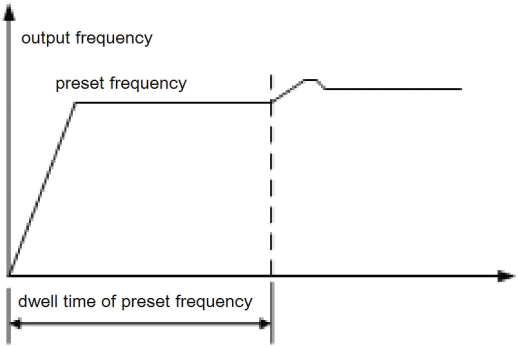

Fig.4-20 closed-loop preset frequency operation schematic

P6.13	sleep threshold	factory default	10.00V
	setting range	**0.0—10.00V**	

This constant defines inverter's feedback limit value of shifting from operating state to sleeping state.

P6.14	wake threshold	factory default	0.00V
	setting range	**0.0—10.00V**	

This constant defines the feedback limit value when shifting from sleeping state to operating state.

If the actual feedback value is less than the set vaule, inverter will shift come out of sleeping state into operating state after five minutes's delay time.

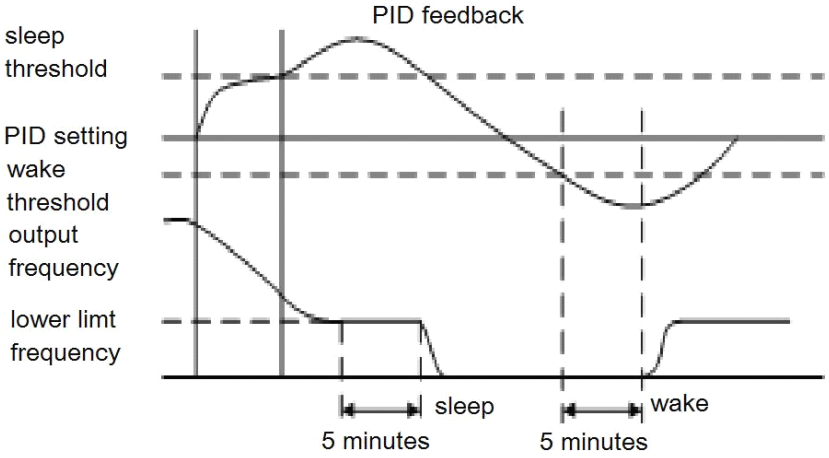

Fig.4-21 sleep and wake function illustration

4.8 PLC operation constant group

P7.00	PLC operation method selection	factory default	000
	setting range	**000-114**	

LED units： operation method selection

0： non-operation **1： single cycle(simple PLC)**
2： continuous cycle(simple PLC) **3： dwell on the last value after single cycle(simple PLC)**
4： transverse operation

LED units：PLC multi-step speed(simple PLC) operation switch method

0：automatic

1：manual switch by mulit-functional terminal.

LED hundreds：transverse operation switch method

0： automatic

1：manual switch by mulit-functional terminal.

LED thousands：disabled

Detailed function explaination of each operation method:

0： non-operation

PLC operation is invalid

1： single cycle

Inverter’s mulit-step speed operation stops after one cyle ends and it needs another operation command to restart. If a certain stage’s operation time is 0, it will be skipped and the operation will go to the next stage. As illustrated in fig. 4-22

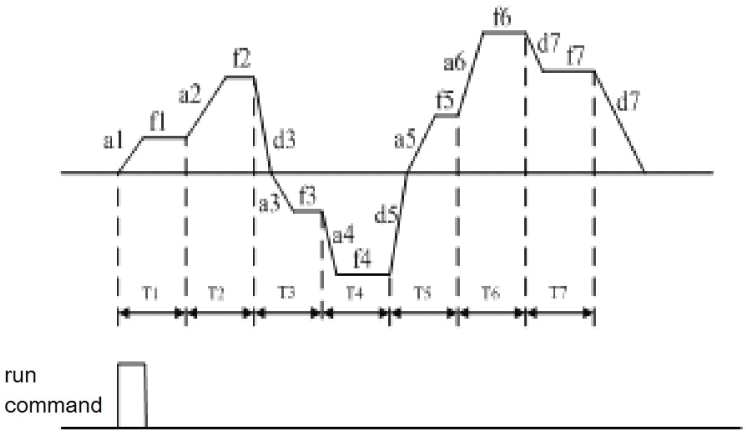

Fig.4-22 single cycle schematic

f_1～f_7 are operation frequencies for stage 1～stage 7 respectively；

T_1～T_7 are operation time for stage 1～stage 7 respecctively；

a_1～a_6 are acceleration time for stage 1～stage 6 respectivley.；

d_3、d_5 and d_7 are deceleration time for stage 3,stage 5, stage 7 respectively.。

Note：

Multi-step speed's operation time must be longer than acceleration time, nevertheless, this group of constants only defines the value of operation time.

Therefore, it is necessary t know the conversion of multi-step speed's acceleration time.

Multi-step acceleration/deceleration time= {（current mulit-step frequency-initial multi-step frequency）/basic operation frequency} × acceleration/deceleration time(P0.14,P0.15)

For example: in the event of multi-step speed operation with basic operation frequency 50Hz,acceleration time 10S, deceleration time 20S, the system's acceleration time from 20Hz to 30Hz will be:

T1= {（30HZ-20HZ）/50HZ} ×P0.14=2S

The system's deceleration time from 30Hz to 10Hz will be

T2= {（30HZ-10HZ）÷50HZ} ×P0.15=8S

2: coutnuous cycle

Inverter's multi-step speed operation recycles until stop command was input, as illustrated in fig.4-23

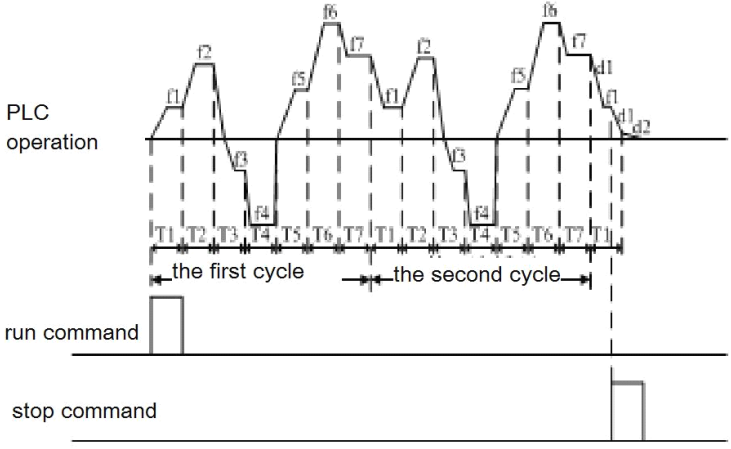

Fig 4-23 recycle illustration

3： the last value dwells after single cycle.

After a single cycle, inverter operates according to the set frequency and operating direction of the multi-step stage where the last operation time is not set as zero. Please see fig. 4-24

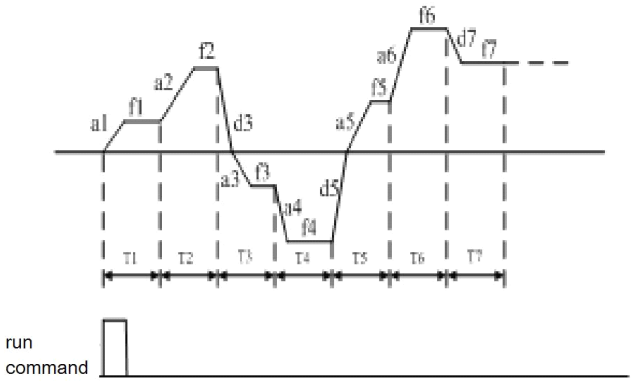

Fig. 4-24the last value dwells after single cycle

4： wollulation frequency control

Inverter's output freuqnecy changes periodicly during the set acceleration /decelleartion time. This function is particularly suitable for textile, fiber and other situation where the speed variation is effected by the different diameters of the barrel.

P7.01	stage 1 operation time	factory default	10.0s
P7.02	stage 2 operation time	factory default	10.0s

P7.03	stage 3 operation time	factory default	10.0s
P7.04	stage 4 operation time	factory default	10.0s
P7.05	stage 5 operation time	factory default	10.0s
P7.06	stage 6 operation time	factory default	10.0s
P7.07	stage 7 operation time	factory default	10.0s
P7.08	disabled		
	setting	**0.0—6000.0s**	
P7.09	multi-ste operation direcdtion 1	factory default	0000
P7.10	multi-ste operation direcdtion 2	factory default	-000
	setting	**0000—1111(0:forward 1:reverse)**	

The above constants are used to set the PLC operation time, operation direction and acceleration/deceleration time. These constant are effective only when the PLC operation function is enabled.

PLC operation priority level is higher than the exterior terminal control's multi-step speed.

P7.11	transverse operation mothod		factory	000
	setting range	**0000—111**		

LED units：disabled

LED tens： oscillation amplitude

0：fixed amplitude

1：fluctuant amplitude

LED hundreds：transverse frequency stop start mothod selection

0： to start according to the momorized state before stop

1: to start from the initial state

LED thousands: transverse operation state power-cut memory

0： to memorize the transverse operation state after power-cut

。To automaticly recover the state before power-cut and reoperate from the cut-off

1： to not memorize the transverse operation state after power-cut.

To restart transverse operation after tnverter's start

P7.12	preset frequency of transverse		factory default	10.00Hz
	setting range	**0.00Hz—upper-limit frequency**		
P7.13	latency time of preset transverse frequency		factory default	0.0s
	setting range	**0.0—3600.0s**		

Preset frequency is operation frequency before the inverter shifts to the transverse operation mode or when the inverter shift out of the transverse operation mode. If you select constant P7.00=4, then the inverter goes directly into the operation of preset transverse frequency after start and then goes into the mode of transverse operation after the latency time of woulation preset frequency. When the selection terminal was selected manually, P7.13 is noneffective.

P7.14	transverse amplitude	factory default	10.0%
	setting range	**0.0—50.0%**	

If you select fixed amplitude, the calculating formula of actual amplitude is:
Transverse frequency amplitude=P7.14x Upper limit frequency

If you select varied amplitude frequency, the calculationg formula of actual amplitude is :

Transverse amplitude=P7.14x(transverse center frequency reference P7.18+the set frequency difined by P0.01)

P7.15	Jump frequency	factory default	0.0%
	setting range	**0.0—50.0%**	

This constant refers to the rapidly declining amplitude of frequency after it arrives to the upper limit in the course of transverse frequency state, certainly, it also refers to the fast rising amplitude after the frequency declines to the lower limit of transverse frequency.

actual jump frequency=P7.15x Transverse frequency.

P7.16	transverse frequency period	factory default	10.0s
	setting range	**0.1—3600.0s**	

This constant was used to set a operation period of transverse frequency.

P7.17	triangle rising time	factory default	50.0%

	setting range	**0.0—100.0%**

This constant defiteds th operation time when transverse frequency operation goes from the lower limit to the upper limit,ie, the acceleration time of transverse operation period.

Actual triangle rising time=transverse period P7.17

P7.18	transverse center frequency	factory default	10.00Hz
	setting range	**0.00—upper limit**	

This constant refers to the reference value of inverter's output frequency center in the course of transverse frequency operation

Actual transverse center frequency is the summation of this constant vaule and the set frequency defiend by exterior frequency setting channel P 0.001. i.e.:

Transverse center frequency=【P7.18】+P0.01 the set frequency of the appointed channel.

note:

The transverse operation frequency is restricted by the upper limit and lower limit frequency. The improper setting will result in abnormal transverse operation.

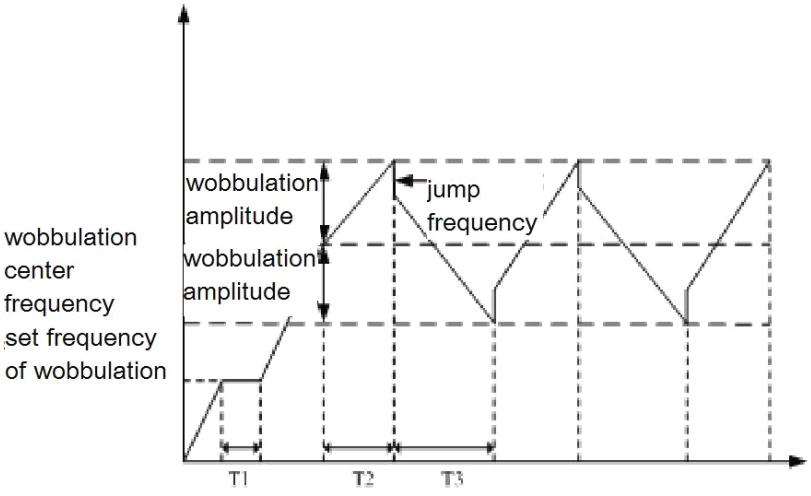

Fig.4.25 transverse setting illustartion

4.9 communication contant group

P8.00	native address:	factory default	1
	setting	**0—31**	

This constant is used to set the address in the course of inverter's RS485 communication. This address is sole.

0：master station

This means the inverter is master station in the even of sequential control. And it controls the operation of other inverters which connects it.

1-31. slave station

It means this inveter workds as passive machine and accepts the data from host machine or the inverter which is in a postion of mater station.

P8.01	communication configuration	factory default	013
	setting	**0000—0125**	

This constant difines the baud rate of RS485 communication, all the commucating parts must be set with same baud rate, and it also defines the data format of commucitaion, the all the commuication parts must adopt same data format to achieve normal commucitaion.

LED units：

Baud rate setting

0：1200BPS

1：2400BPS

2：9600BPS

3：9600BPS

4：19200BPS

5：38400BPS

LED tens：

data format

0：no check

1：even check

2：odd check

LED hundreds：

communication failure operation selection

0：to halt

1：to maintain

LED thousands：disabled

P8.02	communication overtime detecting	factory default	10.0s
	setting range	**0.0-100.0s**	

If this machine doesn't receive the correct data signal beyond the time interval defined by this constant, the machine will take is as communication failure, and inverter wil decide to stop operation or maintain the current state according to the setting of communication failure operation method.

P8.03	the machine's response delay time	factory default	5ms
	setting range	**0-1000ms**	

This constant defines that this machine directly send response data frames to the host machine's delay time after receiving correctly the host machine's information codes

P8.04	proportinoal setting of linked operation	factory default	1.00
	setting range	**0.01-10.00**	

This constant is used to set the weight coefficiency of the frequency command which this inverter ,as a slative machine, reveives from RS485 terminal This machine's actual operation frequency is the product of this constant and the frequency setting command value received from RS485. In the course of linked operation control, this constant can set the operation frequency's proportion of multiple inverters

4.10 protection constants

P9.00	motor overload protection coefficient	factory default	105%
	setting range	**30%—110%**	

If the inverter's driving power level matches the motor, the motor's protection coefficient can be set to be 100%. In this case, if the output current is less than 150% of the inveter's rated current, the motor's overload protection will not operate. When the output current is equal to 150% of the inverter's rated current, motor's overload protection will not operate either because inverter overload protection will act first. Please see fig. 4-26:

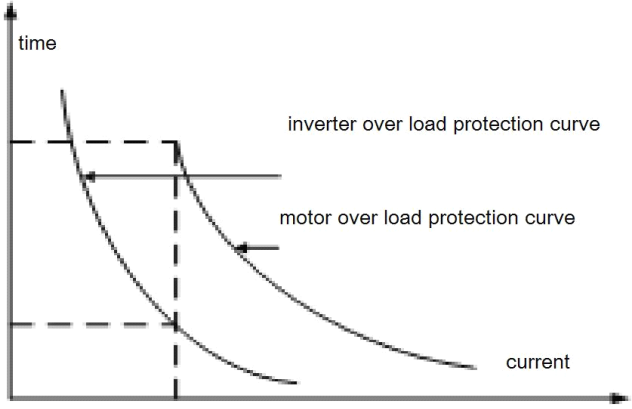

Fig. 4-26 inverter's overload protection and motor's overload protection curve

When inverter's capacity is bigger than the motor's capacity, it is necessary to set motor's overload protection coefficient to perform effect overload protection on the motors with variable loads, as illustrated in fig. 4-27

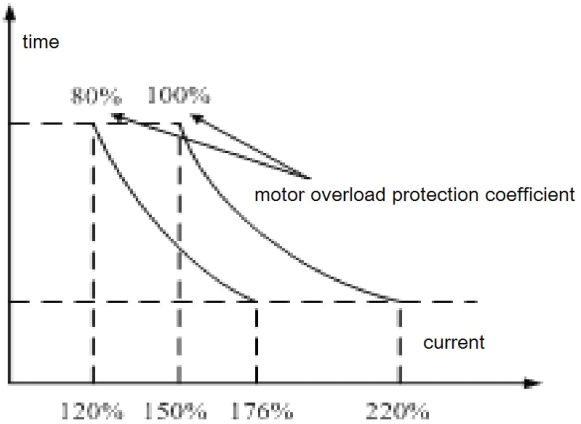

Fig. 4-27 Motor's overload protection efficient setting.

protection efficient is decided by the following formula:

Motor's overload protection efficient=motor's rated current/inverter's rated output currentx100%

P9.01	under voltage protection level	factory default	400V（380V）
	setting range	**360V—480V（380V）**	**220V-240V（220V）**
P9.02	overload restriction level	factory default	700V（380V）

	setting range	**660—760V（380V）　　330-380V（220V）**

This constant defines the threshold value of voltage stallout protection during the inverter's deceleration. If inverter's interior DC pumping voltage exceeds the set value of this constant, inverter will adjust the deceleration time to slow down or stop the drop of the output frequency till the bus voltage is lower than the restriction value, as illustarated in fig. 4-28.

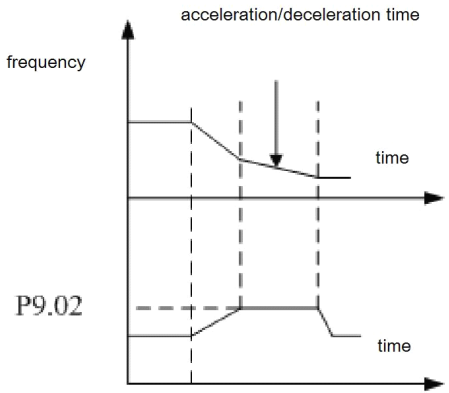

Fig.4-28 overload restriction level illustartion.

P9.03	current amplitude restriction level	factory default	180%

	setting range	**120%—220%**

During the acelleration, when inverter's output current exceeds the set value of this constant, inverter will automaticly adjust acceleration time till the current comes back to be lower than the set vaule, and then continute to rise to reach the target frequency.

This parameter Default that Auto-limiting function Full and effective.

4.11 advanced function constants

PA.00	zero frequency operating threshold		factory default	0.00Hz
	setting range	**0.00—50.00Hz**		
PA.01	zero-frequency return difference		factory	0.00Hz
	setting range	**0.00—50.00Hz**		

This constant defines the frequency ZCP(zero crossing point) characterics

When the frequency is set by analogy signal, normally the signal's fluctuation will disturb the output of the inverter. This constant's delay function can avoid the fluctuation nearby zero point.

The following is an example with analog voltage input channel AI1:

AI1 Input

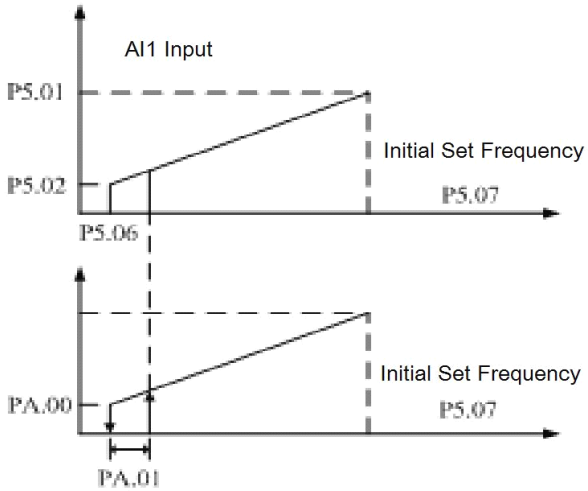

Fig 4-29 Zero frequency retrun difference operation

When the operation command is released, if the above constant(PA.00、PA.01）are not set, the output frequency will be output strictly according to the correspondence between analog voltage and frequency. When operation is started with set PA.00、PA.01, if the VI1's set value is smaller than PA.00+ PA.01, the inverter will not operate. When the corresponding frequency of AI1 exceeds PA.00+ PA.01, the motor starts and accelerate according to the preset accelerating time until it reaches AI1's corresponding frequency..

During deceleration, when the frequency arrives to PA.01, the inveter won't stop. It stops only when AI1's corresponding set frequency arrives to or lower than PA.00

This function can achieve sleep function of inverter,so it can save the energy when it's working.

PA.02	energy-consumption braking start voltage	factory default	740V
	setting range	**600—750V**	
PA.03	energy-consumption braking action ratio	factory default	50%
	setting range	**10—100%**	

This constant group are used to define the action parameters of inverter's built-in barking unit. If inverter's interior DC voltage is higher than start voltage of energy comsumption braking, the built-in unit will act. In this case,if the braking resistor is connected, the reduction of DC voltage will be achieved by releasing the puming voltage energy of inverter's interior current via baking resistor. When DC side voltage comes down to a certain value, inverter's built-in braking unit will be closed.

Energy consumption braking action ratio is used to define the average voltage implemented on the braking resistor in the course of barking unit's action.

PA.04	cooling fan control		factory default	0
	setting range	**0**	**auto control mode**	
		1	**continuous operation when the power is on**	

0：auto control mode

It runs continuously during the operation of inverter

The fan stops when the inverter stops operation and the detected termperature of heat sink is below 40 centigrade

1：continuous operation when the power is on

This mode is only applicable in the event that some of the fans cann't stop wrok.

PA.05	UP/DOWN termial modifying rate	factory default	1.00Hz/S
	setting range	**0.01Hz～100.0Hz/S**	

PA.06	overmodulation function	Factory default	0
	setting range	**0**	**prohibited**
		1	**allowed**

When the grid voltage is kept in a low situation for a long time(lower than 15% of the reated voltage), or the motor's output torque under the control of inverter is lower than the output torque of grid frequency operation,such as long time heavy load operation, you can use this function.

Chapter 5 Troubleshooting

5.1 Failure and countermeasure

Fault code	Fault name	Possible cause	Solution
Er00	Over current at accelerating operation	① Too short accelerating time ② Ultra large load inertia. ③ Unsuitable V/F curve ④ Ultra low main voltage ⑤ Too small inverter power ⑥Restart the rotating motor	① Extend accelerating time ② Reduce torque boost value or adjust V/F curve ③ Choose the inverter of large power ④ Set the speed-detection start function
Er01	Over current at decelerating operation	① Too short decelerating time ② Ultra large load inertia. ③ Too small inverter power	① Extend decelerating time ② Reduce the load inertia ③ Choose the inverter of large power
Er02	Over current at constant speed operation	① Abnormal input voltage ②Load occurs abrupt change or abnormity ③ Too small inverter power	① Examine input power ② Examine load or reduce the abrupt change of load ③ Choose the inverter of large power
Er03	Over voltage at accelerating operation	① Abnormal input voltage ② Restart the rotating motor	① Examine input power ② Set the speed-detection start function
Er04	Over voltage at decelerating	① Too short decelerating time ② There is energy -feedback l	① Extend decelerating time ②Add braking power of exte

	operation	oad ③Abnormal input power supply	rnal energy-consumption braking unit ③ Examine input power
Er05	Over voltage at constant speed operation	① Abnormal input voltage ② Ultra large load inertia.	① Examine input power ②Choose energy-consumption braking unit
Er06	Over voltage at stopping	①Abnormal input supply voltage	①Examine input supply voltage
Er07	Under voltage at operating	① Abnormal input voltage	① Examine supply voltage
Er08	Phase failure of input power	①Input power occurs phase failure or abnormity	① Examine input power
Er09	Module fault	① Inverter outputs short circuit or earthes ② Instant over current of inverter ③Too high environment temperature ④Air flue is blocked or fan is damaged ⑤DC auxiliary power supply occurs fault ⑥ Abnormal control panel	① Examine the connecting wire; ② Refer to solution against over current ③ Reduce environment temperature ④ Clean the air flue or change the fan; ⑤ Ask for service from manufacturer or agency. ⑥ Ask for service from manufacturer or agency.
Er10	Over heat radiator	① Too high environment temperature ② Fan is damaged ③ Flue is blocked	① Lower environment temperature ② Change the fan ③ Clean the flue and chang

			e the ventilation condition;
Er11	Overload of inverter	① Too high torque boost or unsuitable V/F curve ② Too short accelerating time ③ Too large load	①Reduce the torque boost and adjust the V/F curve. ② Extend accelerating time ③ Choose the inverter of large power
Er12	Overload of motor	①Too high torque boost or unsuitable V/F curve ② Too low main voltage ③Locked rotor of motor or too large abrupt change of load ④Incorrect setting of motor overload protection factor	① Reduce the torque boost value or adjust the V/F curve. ② Examine main voltage ③ Examine load ④Set the motor overload protection factor correctly
Er13	Fault of external equipment	①Fault input terminal of external equipment closes	①Open the fault input terminal and remove the fault.
Er14	Fault of serial port communication	① Improper setting of baud rate ② False of serial port communication ③ Without upper machine communication signal	① Set baud rate correctly ②Examine communication cable and ask for service ③Check whether the upper machine works and the connection is correct.
Er15	Reserved		
Er16	Incorrect current detection	① The current detecting device is damaged or the circuit occurs fault	①Ask for service from manufacturer or agency.. ②Ask for service from manufacturer or agency..

		②DC auxiliary power is damaged	
Er17	Fault of communication between keyboard and control panel	①The circuit connecting keyboard and control panel occurs fault ② The terminal is poor in connecting	① Ask for service ② Examine and reconnect
Er18	System fault		

5-1 Table of fault code and solution

Chapter 6 Maintenance

6.1 Maintenance

In case of change of service environment for inverter, such as temperature, humidity, smog and aging of inverter internal parts, the inverter fault may occur. Therefore, the inverter must be examined daily and given the regular maintenance in period of storing and using.

6.1.1Daily maintenance

When the inverter is turned on normally, please make sure the following items:

（1）Whether the motor has abnormal noise and vibration.

（2）Whether inverter and motor heat or occur abnormity.

（3）Whether environment temperature is too high.

（4）Whether the value of load ammeter is in conformity with the former.

（5）Whether the fan of inverter rotates normally.

6.2 Regular maintenance

6.3Warranty of inverter

If the inverter has the following situation, we can provide the warranty service.

(1) The range of warranty only refers to the body of inverter

(2) When normally used, the inverter occurs fault or is damaged within 12 months, we will be responsible for warranty; if exceeding 12months, we will charge the reasonable maintenance fee.

(3)Within 12 months, if the following situations occur, we also charge the reasonable maintenance fee;

- The inverter is damaged for that user doesn't refer to the operating manual.
- The inverter is damaged by reason of flood, fire, abnormity of voltage, etc.
- The inverter is damaged by reason of false connection.
- The inverter is damaged for that it is used for the abnormal purpose.

(4) The relevant service fee is calculated according to actual cost. If a contract has been set, we refer to the contract first for handling.