Computer Vision

Computer Vision vs Machine Vision

Aspect	Machine Vision	Computer Vision
Optimal data volumes	Manages thousands to tens of thousands of data points	Handles large datasets with millions of data points
How it works	Operates on predefined algorithms for specific tasks	Learns from data using Machine Learning models and model refinement
Outputs	Produces simple, specific results like pass/fail decisions, measurements, or defect detection	Generates complex outputs such as object recognition, scene understanding, and predictive analytics

Cognitive vision

It refers to the cognitive processes involved in visual perception, Attention, Memory, Pattern recognition. It is used to simulate human-like understanding and reasoning about visual information to achieve context-aware, intelligent decision-making.

Factors in Image Formation

1. **Geometry:** The relationship between points in the three-dimensional world and their images
2. **Radiometry:** The relationship between the amount of light radiating from a surface and the amount incident at its image
3. **Photometry:** Ways of measuring the intensity of visible light
4. **Digitization:** Ways of converting continuous signals to digital approximations

Radiometry and Photometry

Radiometric Quantity	Symbol	Unit	Definition	Photometric Quantity	Symbol	Unit
Radiant Energy	Q_e	Joule		Luminous Energy	Q_v	Talbot
Radiant Power	Φ_e	Watt	$\Phi = \frac{dQ}{dt}$	Luminous Power	Φ_v	Lumen (lm)
Radiant Intensity	I_e	Watt/sr	$I = \frac{d\Phi}{d\Omega}$	Luminous Intensity	I_v	candela (cd) = Lumen/sr
Radiance	L_e	Watt/m^2 sr	$L = \frac{d^2\Phi}{d\Omega dA_{s\perp}}$	Luminance	L_v	Lumen/m^2 sr
Irradiance	E_e	Watt/m^2	$E = \frac{d\Phi}{dA}$	Illuminance	E_v	Lux=Lumen/m^2

Working Model

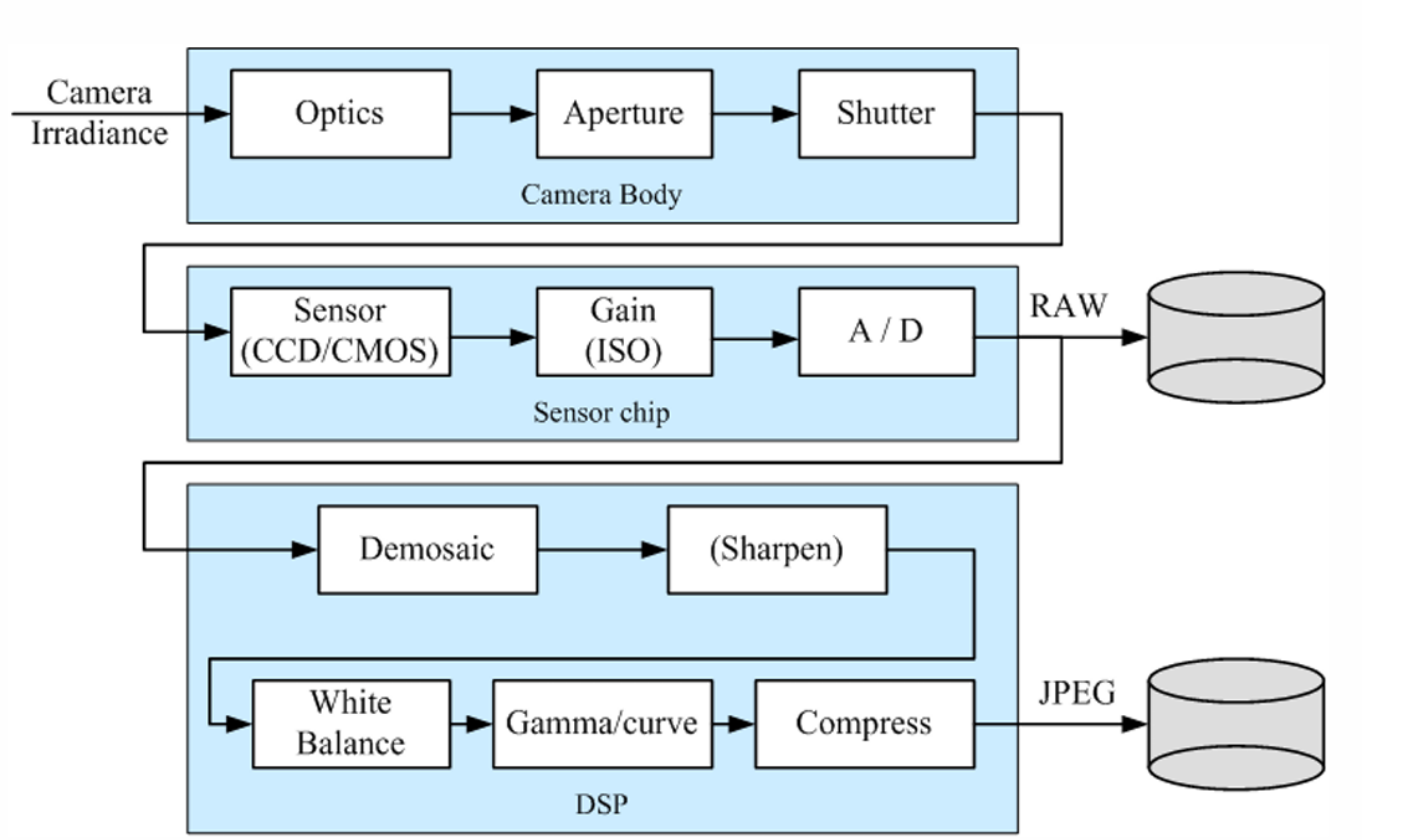

- **Optics / Lens:** The first part of a camera which interacts with photons of light from the environment.
- **Aperture:** Controls how much light enters your camera.
- **Shutter Speed:** Controls how long light enters your camera

Sensors

- **CCD (charge-coupleddevice) and CMOS (complementary metaloxide semiconductor):** Two types of image sensors that are used in digital cameras. They are used to capture and transform light into electrical signals

- **Gain:** It amplifies this signal to ensure that even low-light conditions result in a bright image.

DSP

- **Demosaicing:** The camera runs a demosaicing algorithm internally to generate the full RGB image.
- **Sharpening:** It enhances edges and fine details by increasing local contrast.
- **White balance:** It is a camera setting that establishes the true color of white. This produces a baseline from which all other colors are measured.
- **Gamma correction:** It is a nonlinear method used in luminance encoding and decoding to adjust to human visual perception.
- **JPEG (Joint Photographic Experts Group) :** It is a graphic image file compressed with lossy compression using the standard developed by the ISO/IEC

Intensity Square Law

The intensity of a light source falls off with the square of the distance between the source and the object being lit

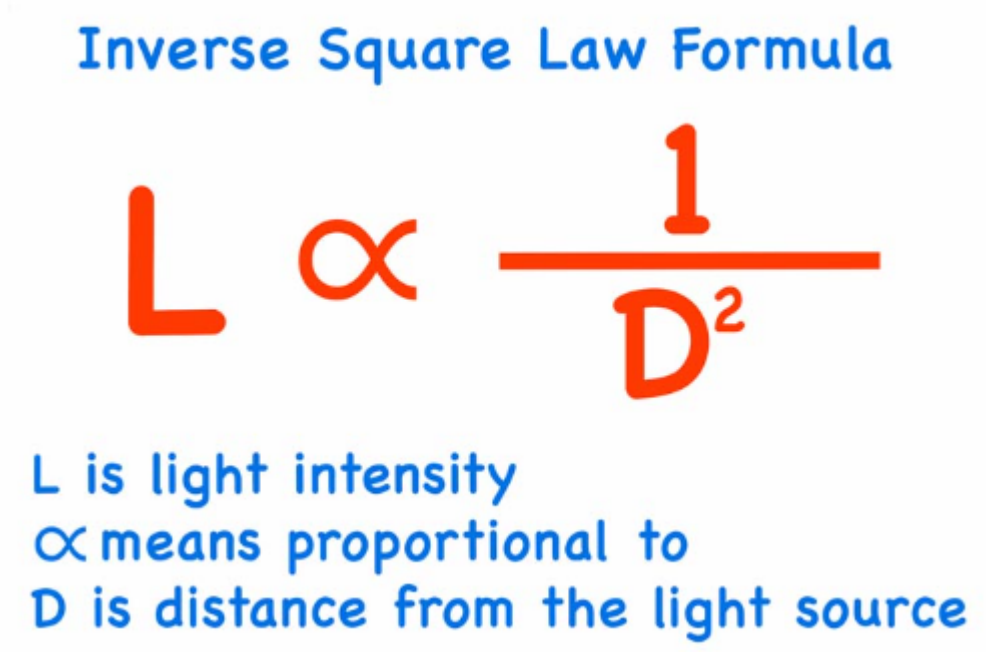

{width=50% height=300px}

BRDF (Bidirectional Reflectance Distribution Function)

- This model defines how light reflects off surfaces, which is crucial for photorealistic rendering in 3D graphics and material analysis.

> BRDF Calculation fr = L_o / E_i

- L_o - Measured outgoing radiance; E_i - Incident irradiance

- **Albedo (ρ)** is a material property that measures how much incoming light a surface reflects, relative to how much it receives.

> Albedo : ρ = π . fr Lambertian BRDF fr = ρ / π

- Albedo controls the overall brightness
- BRDF controls the directional distribution
- BRDF determines the direction and intensity of the reflected light that eventually reaches the sensor.
- **Photodiodes** are arranged in a grid pattern on the surface of the image sensor
- Each photodiode corresponds to one pixel in the final image.

Light enters into the sensor(CCD/ CMOS)

- **Photon Detection**

> E = h.f
> E = h c / λ f = 1 / λ

f - frequency of the light; h - 6.62×10^{-34} Planck's constant; c - 3×10^{8} Speed of light

If N photons arrive per second:

$$\boxed{\Phi = N \cdot E_{photon}}$$

- **Outgoing Radiance Using BRDF**

> L (Luminance / Radiance) = fr . E

Intensity of Sensor

- Bayer filters helps to filter each color in the analog signal so that only 1 color is displayed on the image plane.
- Each pixel measures the intensity for one color channel.
- 50% - Green, 25% - Red, 25% - Blue
- The dominance of geen color is due to the human eye being more sensitive to green color and this also enhances the sharpness and details of the image.
- Green is crucial for luminance (brightness) and preserving fine details in an image.

Analog Voltage == > Bayer Filtering == > ADC == > RAW Bayer Image == > Demosaicing

---

Standard Bayer Pattern

RGBG Pattern

R	G	R	G
G	B	G	B

R	G	R	G
R	G	R	G
G	B	G	B

Alternative Bayer Pattern

GRBG Pattern

G	R	G	R
B	G	B	G
G	R	B	G
G	B	G	B

Reconstruction of image

Demosaicing / Debayering is the digital image processing step used to reconstruct a full-color RGB image from a RAW Bayer image, where each pixel contains only one color component.

RAW Bayer image == > Demosiacing == > RGB image

Interpolation Techniques

1. **Nearest Neighbour Interpolation**

- Simplest method which fills the missing color values for a pixel by copying the value of the nearest neighboring pixel of the same color.
- Priority to be given to **top / left element** (first encountered).
- It is fast and simple but produces **blocky and low quality images**.

2. **Bileniar Interpolation**

- Consider all neighbours and take an average.
- Boundary pixels will have partial neighbours and interpolation adjusts accordingly
- Produces smoother results than nearest neighbor interpolation but may blur the fine details and edges.

3. **Gradient-Based Interpolation**

- It considers the direction of edges and gradients in image to avoid interpolation errors.
- Missing values are interpolated along direction of minimum intensity gradient for green. Compute horizontal and vertical gradient (green) and choose the smallest gradient vaule. If both gradient values are same then take average
- Red and blue values are interpolated from diagonal neighbors

Logic for Bayer to RGB image program

- GRBG Pattern - even row and odd colomn - Red

- odd row even colomn - Blue, even row odd column and odd row odd column - Green

```
for i in range (0,3):
for j in range(0,3):
if(i % 2 ==0) &&  (j % 2 ==0) || (i %2!=0) && (j %2!=0)
```

Logic for RGB image to Bayer image

```
if (i>0):
RGB [ 0,0,1] = I [ i,j-1]
RGB [0,0,1] = I [i,j]
RGB [0,0,2] = I [i+1,j]
```

Chrominance Reduction

Chrominance reduction is performed by converting RGB image to YCbCr (colors stored in CbCr and Y stores brightness) and averaging 2 X 2 chroma block, resulting in reduced resolution Cb and Cr channels while preserving ful - resolution luminance.

Non linear Device Response

> L = V ^{gamma}

gamma (approx) = 2.2 V = input voltage ; L = emitted luminance

---

Gamma Correction

Gamma is a voltage applied to display the image on the screen

Step 1 Inverse Gamma (Gamma Encoding)

> V = L $^{1/\text{gamma}}$

Step 2 Gamma Decoding (Reversing the Inverse)

$$L_{display} = V^{\gamma}$$

Substitute $V = L^{1/\gamma}$:

$$L_{display} = \left(L^{1/\gamma}\right)^{\gamma} = L$$

Result: Effective Linearity

The overall system becomes linear. Input luminance maps correctly to output luminance and image brightness appears correct to the human eye

---

JPEG Compression

- Joint Photographic Experts Group
- Widely used lossy image compression technique
- Reduce storage and bandwidth

Steps in JPEG Conversion

1. **Color Space Conversion** convert RGB to CbCr Y (Luminance): Represents brightness. Cb and Cr (Chrominance): Represents color information.

2. **Downsampling** Reduces file size w/o affecting visual quality Reduce the resolution of the chrominance components

3. **Block Splitting** Dividing image to 8X8 blocks

- Y Luminance - many 8X8 blocks
- Cb Blue Chroma - fewer 8X8 blocks
- Cr Red Chroma - fewer 8X8 blocks

Conversion Formula rounded off values

```
Y = 0.3R + 0.59G + 0.11B
Cb = 128 - 0.17R - 0.33G + 0.5B
Cr = 128 + 0.5R - 0.42G - 0.08B
```

4. **Discrete Cosine Transformation**

Apply DCT to each 8X8 block. Transforms spatial pixel values into frequency components.

5. **Quantization**

Reduce precision of frequency components using quantization matrix. This step is where most of the lossy compression occurs.

6. **Encoding**

The quantized DCT coefficients are encoded using: Run-Length Encoding (RLE): Compresses sequences of zeros efficiently. Huffman Encoding: A lossless compression technique for further size reduction

---

Camera Calibration

- Process of estimating camera parameters.
- We need this to have a mathematical relation between 2D image and 3D real world.

Fundamental Problem

- A real camera is not a traditional pinhole camera
- **Internal parameters / Intrinsics (Inside the Camera):** Focal length, Optical Centre, Radial Distortion Cooefficients

f_x	0	c_x
0	f_y	c_y
0	0	1

- **External parameters / Extrinsics :** Rotation matrix R; Translation vector t

---

Intrinsic Parameters

Distortion

Our intention is to undisort the picture by camera caliberation

Radial Distortion

It causes straight lines to appear curved inwards or outwards

Mathematical Representation

> $x_{disorted} = x(1 + k_1 r^2 + k_2 r^4 + k_3 r^6)$ $y_{disorted} = y(1 + k_1 r^2 + k_2 r^4 + k_3 r^6)$

> $r^2 = x^2 + y^2$

Square of Euclidean distance

> k_1, k_2, k_3

Radial distortion coefficients of the lens

Tangential Distortion

It occurs when the lens and the image plane are not parallel.

- $x_{distorted} = x + [2 * p_1 * x * y + p_2 * (r^2 + 2 * x^2)]$
- $y_{distorted} = y + [p_1 * (r^2 + 2 * y^2) + 2 * p_2 * x * y]$
- x, y — Undistorted pixel locations. x and y are in normalized image coordinates.
- p_1 and p_2 — Tangential distortion coefficients of the lens.
- $r^2 = x^2 + y^2$

Extrinsic Parameters

Rotation Matrix (R)

This 3×3 matrix defines the orientation of the camera coordinate system relative to the world coordinate system.

Translation Vector (t)
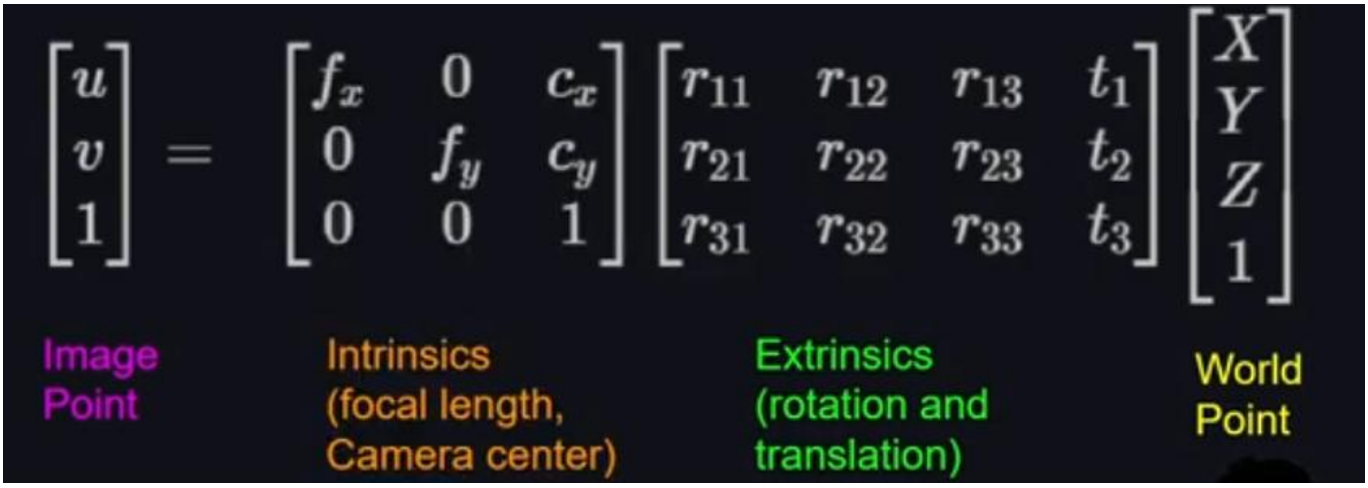
This 3×1 vector defines the position of the camera's optical center in the world coordinate system.