A High Performance and Low Power Subthreshold Voltage Level Shifter Design

Objective

The paper proposes a novel voltage level shifter circuit designed to operate efficiently in the subthreshold region, targeting ultra-low power applications such as IoT devices and biomedical electronics.

Background

Voltage Level Shifters are essential in modern VLSI systems to interface blocks operating at different supply voltages.
Conventional level shifters struggle with speed and power efficiency, especially at low supply voltages (subthreshold operation).

Proposed Design

The new circuit topology improves both speed and power consumption compared to traditional designs.
It utilizes a modified structure that reduces leakage currents and enhances switching speed, even when operating at voltages below the transistor threshold voltage.

Key Features

•**Low Power Consumption:** Achieved by minimizing leakage and dynamic power, crucial for battery-powered and energy-harvesting systems.

•**High Performance:** Faster signal conversion between voltage domains, even at subthreshold voltages.

•**Robustness:** Maintains reliable operation across process, voltage, and temperature variations.

Results

The proposed level shifter demonstrates:

Significant reduction in power consumption compared to conventional CMOS and other recent designs.

Improved propagation delay, making it suitable for high-speed, low-voltage applications.

Experimental and simulation results validate the effectiveness of the design.

Applications

Ideal for ultra-low power VLSI circuits, IoT sensor nodes, wearable devices, and biomedical implants where energy efficiency is critical.

Working Principle of Proposed Design :

•**Standby Mode:** Both input signals (Input1 and Output1) are at low voltage.
•When Input1 **signal goes high**, the Output1 signal initially stays low.

•**Transistor Actions:**
- **PM3** conducts due to low signal, while **NM5** remains off.
- High Input1 signal activates **NM9**, which triggers PM3, PM4, and NM10.

•**Voltage Transition:**
- OUT rises toward VDDH under PM3, PM4, and NM10 influence.
- When OUT reaches VDDH threshold, PM3, PM4, and NM10 strengthen pull-up.

•**Pull-Down Mechanism:**
- When Input1 returns low, NM10 turns on, pulling **Output** low.
- PM5 turns off, streamlining the pull-down process.

Cross coupled Level shifter :

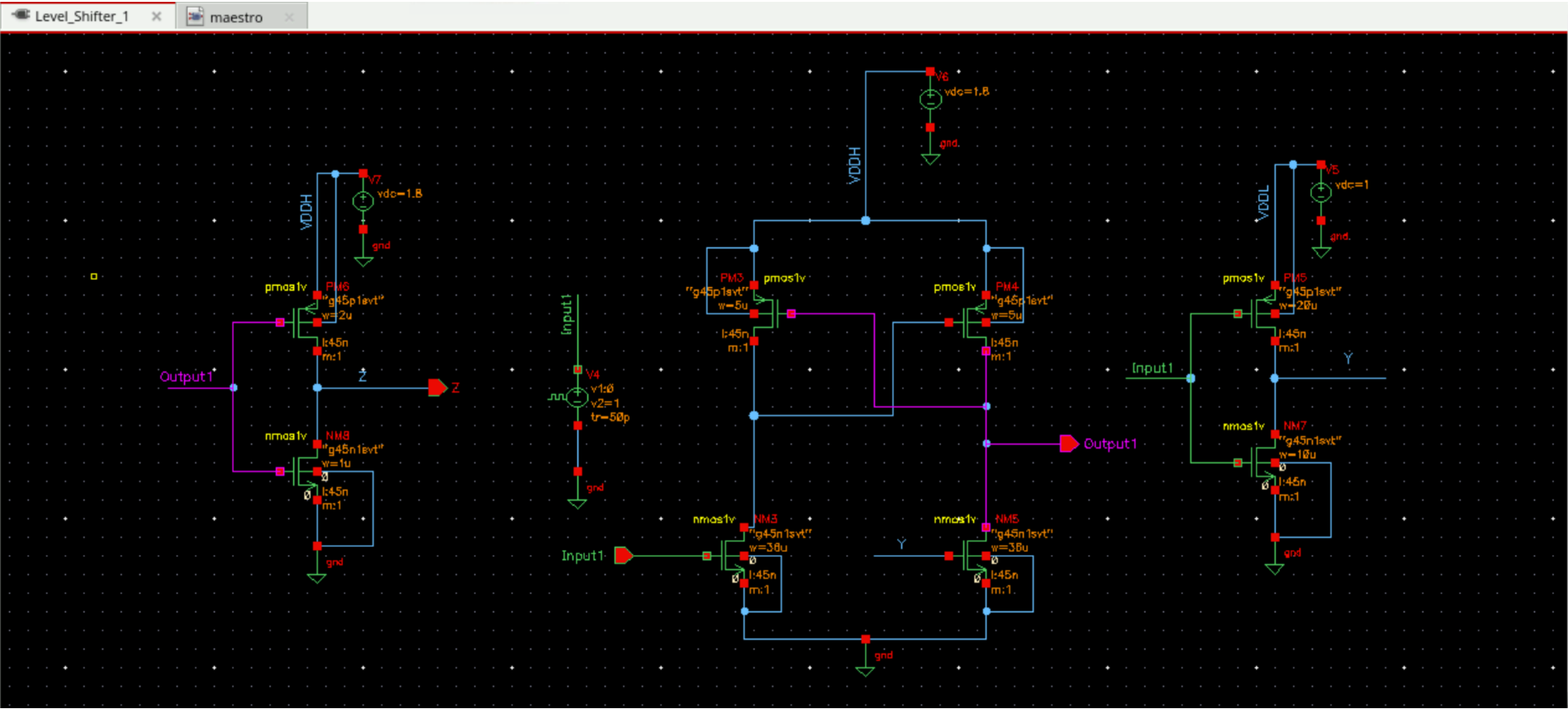

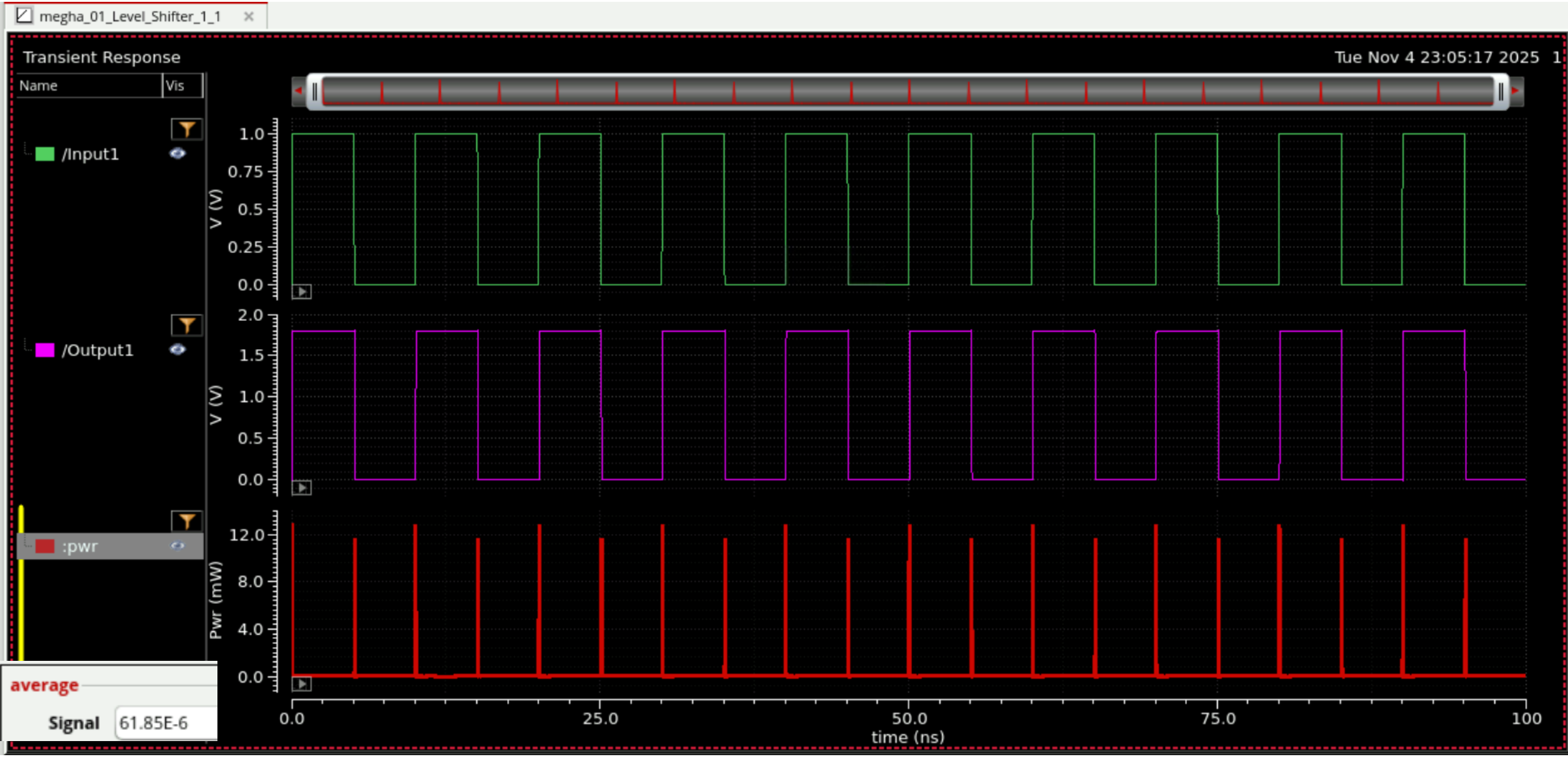
megha_01_Level_Shifter_1_1
Transient Response
Tue Nov 4 23:05:17 2025
Name
Vis
/Input1
/Output1
:pwr
V (V)
Pwr (mW)
time (ns)
average
Signal
61.85E-6

Delay :

5.107E-9

Function Panel

All | delay

delay

Signal1	VT("/Input1")		
Signal2	VT("/Output1")		
Threshold Value 1	0.5	Threshold Value 2	0.5
Edge Number 1	1	Edge Number 2	1
Edge Type 1	rising	Edge Type 2	falling
Periodicity 1	1	Periodicity 2	1
Tolerance 1	nil	Tolerance 2	nil

OK Apply Defaults Help Close

Proposed Design :

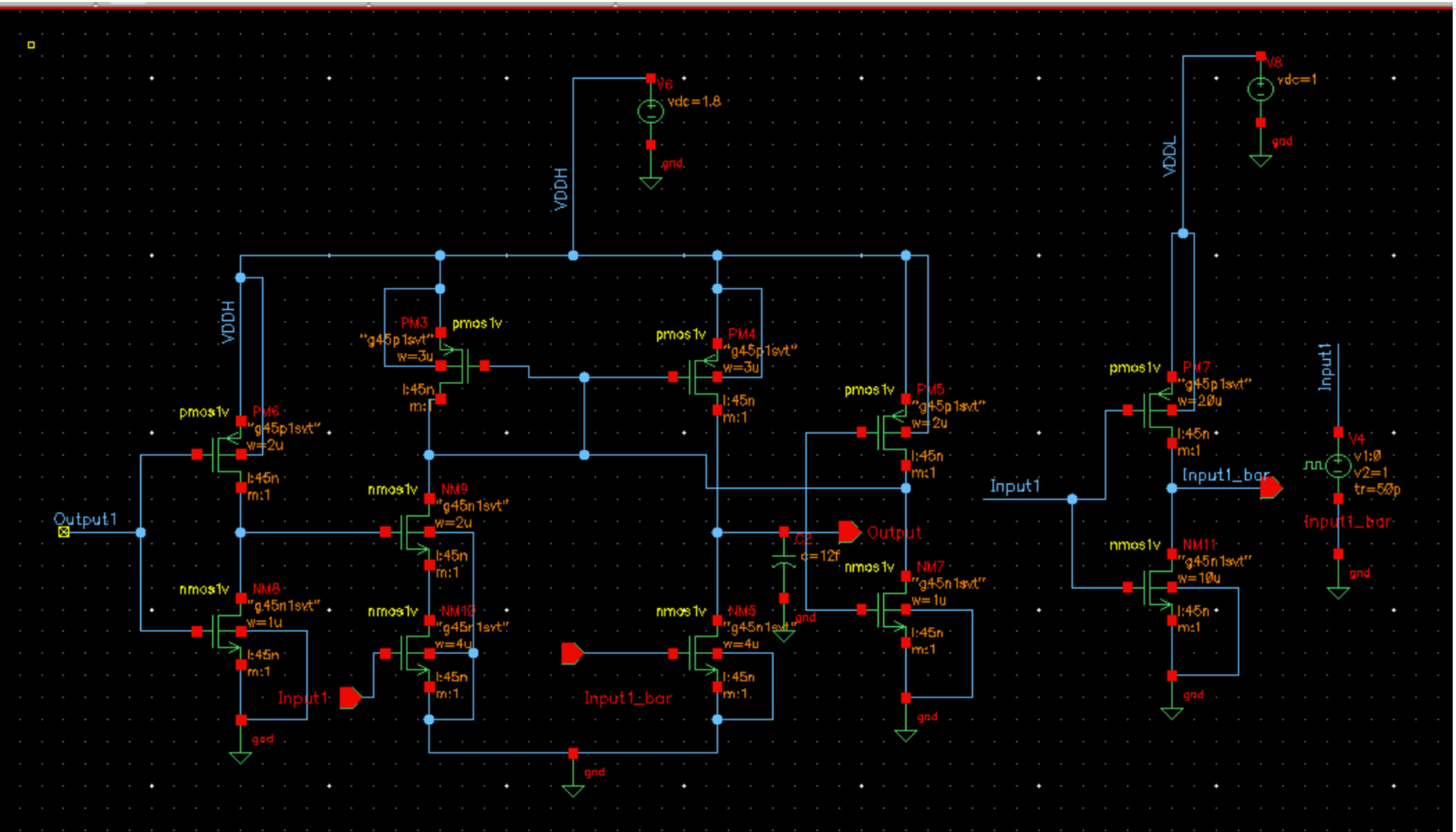

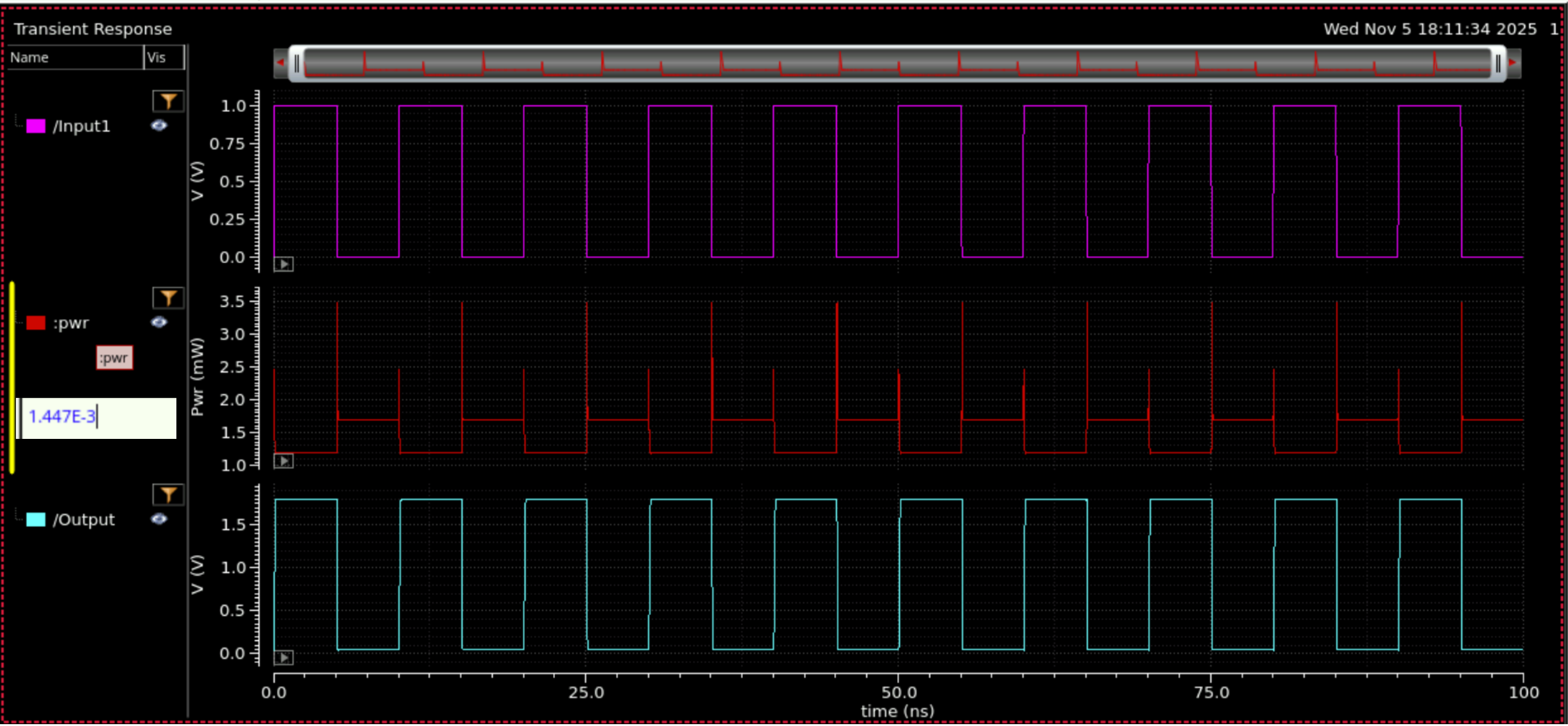
Transient Response
Wed Nov 5 18:11:34 2025
Name
Vis
/Input1
:pwr
:pwr
1.447E-3
/Output
V (V)
Pwr (mW)
V (V)
time (ns)
0.0
25.0
50.0
75.0
100

Delay :

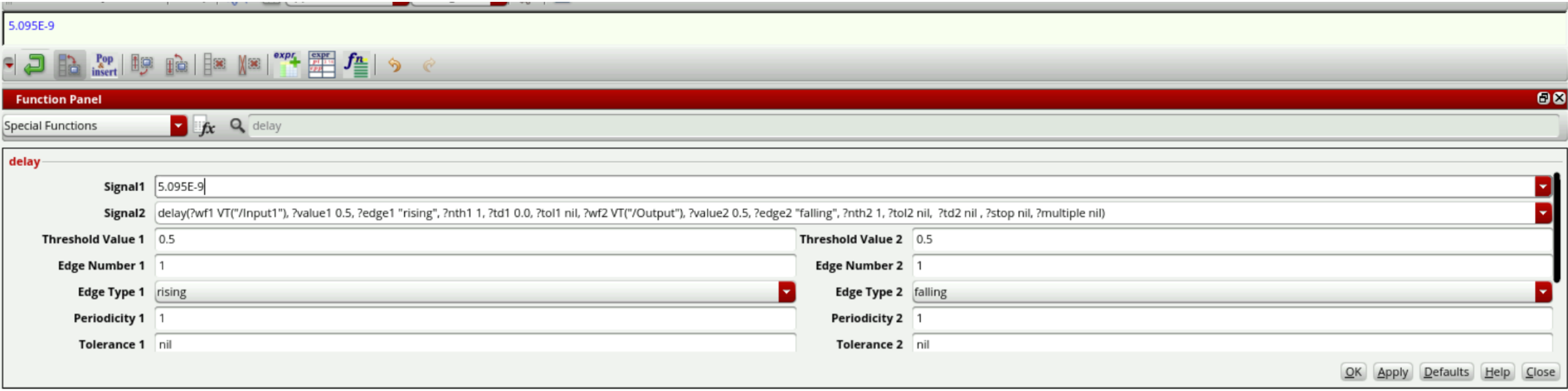

Mentor Remarks :

Megha successfully implemented a level shifter circuit based on a research paper and verified its operation through simulation. Demonstrated good understanding of device ,sizing , biasing and performance parameters.