# IO Board
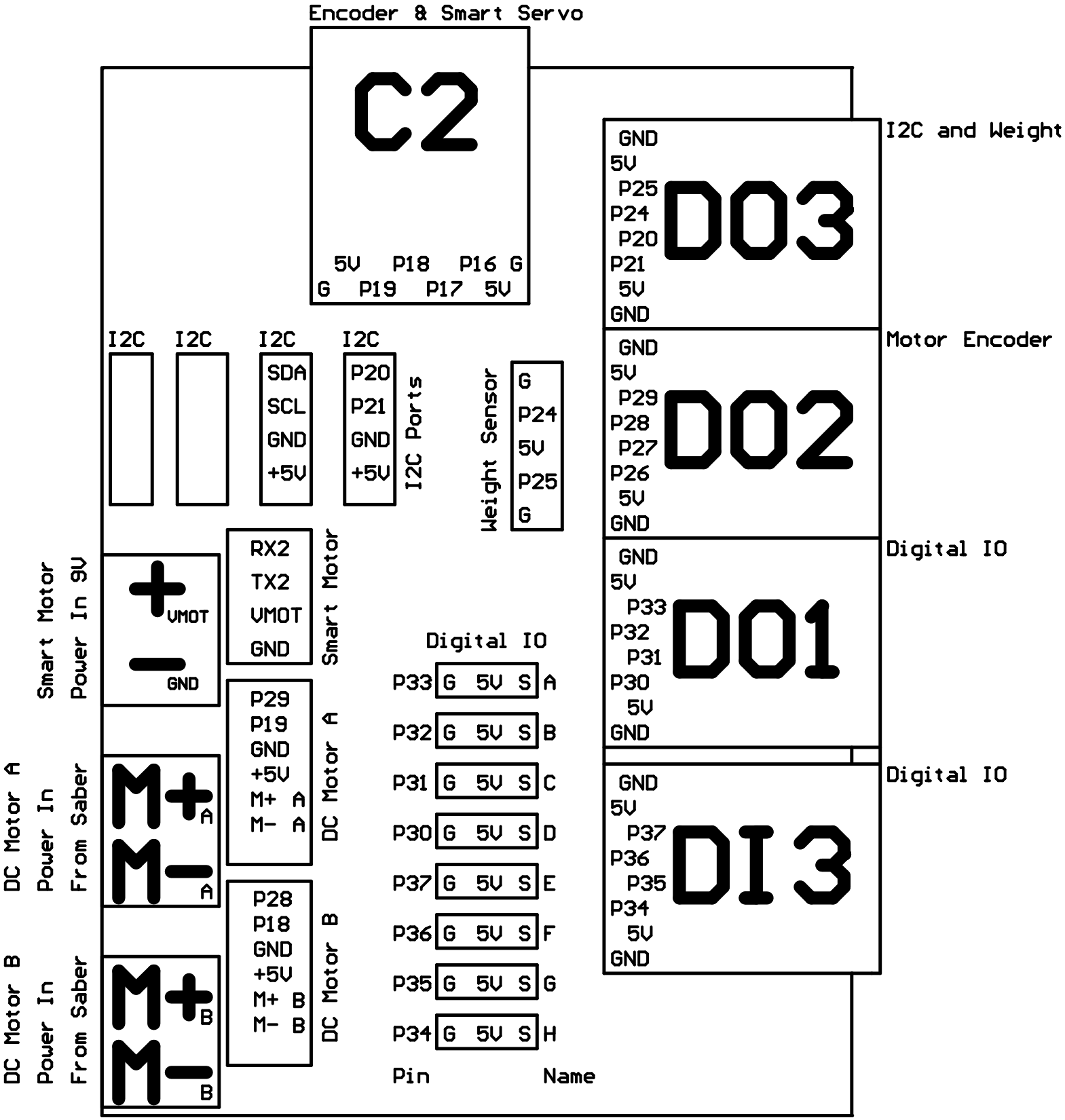
## Top View