Reg No.:_____ Name:_____

APJ ABDUL KALAM TECHNOLOGICAL UNIVERSITY

First Semester B.Tech Degree Regular Examination December 2024 (2024 Scheme)

Course Code: GXEST104

Course Name: INTRODUCTION TO ELECTRICAL AND ELECTRONICS ENGINEERING

Max. Marks: 60 Duration: 2 Hour 30 Minutes

- *Use separate answer sheets for Part 1 and Part 2*
- *No separate minimum marks are required to pass.*

PART 1: ELECTRICAL ENGINEERING (30 Marks)

PART 1-A

Module (1 & 2)

Answer all questions. Each question carries 3 marks

		CO	Marks
1	Use current division rule to find current through each branch in a DC electric circuit with two resistances R_1 and R_2 in parallel and if the total current is I.	CO1	3
2	Compare magnetic circuit and electric circuit.	CO2	3
3	Differentiate between statically induced emf and dynamically induced emf with an example for each.	CO1	3
4	State and explain Faraday's Laws of Electromagnetic induction and Lenz's law.	CO1	3

PART 1-B

Module (1&2)

Answer any one full question from each module. Each question carries 9 marks

Module 1

			CO	Marks
5	a)	Derive the expression for energy stored in a capacitor	CO1	3
	b)	Use star-delta transformation technique to find the equivalent resistance between A and B in the circuit shown in figure (2).	CO1	6

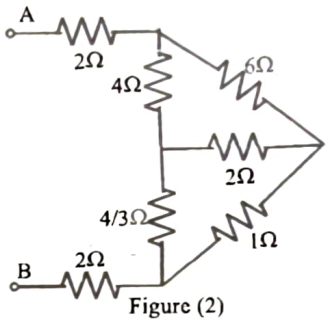

Figure (2)

6	a)	Derive the expression for coupling coefficient of a coupled coil with self-inductances L_1 and L_2 and mutual inductance M.	CO1	3
	b)	For the circuit shown in figure (3), Determine the branch voltages V_{AB}, V_{BC} and V_{CA} using nodal analysis. Take D as reference node.	CO1	6

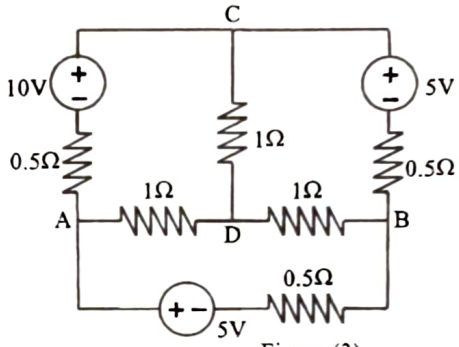

Figure (3)

Module 2

7	a)	Derive the expression for RMS value, average value, form factor and peak factor of a sinusoidal voltage $v(t) = V_m \sin \omega t$ volts.	CO1	4
	b)	A series RLC circuit with R = 5Ω, L = 0.1H and C = 5mF is supplied from a 100V, 10Hz supply. Find the impedance, power factor, current drawn from the supply, active power, reactive power and apparent power.	CO1	5
8	a)	Prove that the average power consumed in an inductance is zero if the input voltage is $v(t) = V_m \sin \omega t$ volts.	CO1	4
	b)	A 3-phase 100V, 50Hz balanced supply is connected to a balanced 3-phase RL load with R = 3Ω and X_L = 4Ω. Find the current drawn from the supply if the load is i) star connected and ii) delta connected.	CO3	5

PART 2: ELECTRONICS ENGINEERING (30 Marks)

PART 2-A

Module (3 & 4)

	Answer all questions. Each question carries 3 marks	CO	Marks
1	Differentiate between active and passive electronic components with suitable examples	CO4	3
2	Draw the V-I characteristics of a PN junction diode and explain	CO4	3
3	With the help of a neat block diagram, explain the building blocks of a basic fiber optic communication system	CO5	3
4	Draw the block diagram of a function generator	CO6	3

PART 2-B

Module (3 & 4)

Answer any one full question from each module. Each question carries 9 marks

Module 3

5	a)	Explain the working of an RC coupled amplifier with a neat circuit diagram.	CO4	6
	b)	For an NPN transistor if the common base current gain is 0.99 and collector current is 20mA, Find the value of base current and emitter current?	CO4	3
6		What is a full wave rectifier? Explain the working of a full wave bridge rectifier using necessary diagrams. Write the equations for average value, rms value, ripple factor and efficiency for the same.	CO4	9

Module 4

7	a)	What do you mean by Amplitude Modulation and Frequency Modulation? Explain using diagrams.	CO5	6
	b)	What are Lissajous patterns in CRO? Draw the Lissajous patterns when the waveforms in two inputs are sine waves having equal frequency and 90^0 phase difference.	CO6	3
8	a)	Explain the principle of Global System for Mobile Communication (GSM) using block diagram	CO5	6
	b)	Draw the block diagram of a digital multimeter	CO6	3

******