Header
Report Properties
Simulation Model 1
Study 1 - Static Stress
Study Properties
Study Setup
Settings
Materials
Contacts
Load Case1
Constraints
Loads
Guided Results
Safety Factor
Results
Result Summary
Safety Factor
Stress
Displacement

Study Report

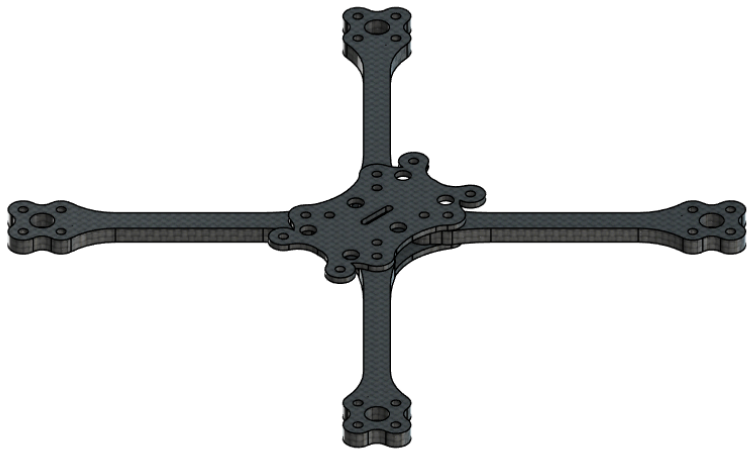

Analyzed File	drone_copy	Version	Autodesk Fusion (2701.1.27)
Creation Date	2026-04-07, 23:55:19	Author	arora

Report Properties

Report Properties	
Title	Studies
Author	arora

Simulation Model 1

Study 1 - Static Stress

Study Properties

Study Properties	
Study Type	Static Stress
Last Modification Date	2026-04-07, 23:40:14

Study Setup

Settings	
General	
Contact Tolerance	0.20 mm
Remove Rigid Body Modes	No
Mesh	
Average Element Size (% of model size) - Solids	8
Scale Mesh Size Per Part	No
Average Element Size (absolute value)	-

Header
Report Properties
Simulation Model 1
Study 1 - Static Stress
Study Properties
Study Setup
Settings
Materials
Contacts
Load Case1
Constraints
Loads
Guided Results
Safety Factor
Results
Result Summary
Safety Factor
Stress
Displacement

Element Order	Linear
Create Curved Mesh Elements	No
Max. Turn Angle on Curves (Deg.)	60
Max. Adjacent Mesh Size Ratio	2.7
Max. Aspect Ratio	18
Minimum Element Size (% of average size)	40
Adaptive Mesh Refinement	
Number of Refinement Steps	0
Results Convergence Tolerance (%)	20
Portion of Elements to Refine (%)	10
Results for Baseline Accuracy	von Mises Stress

Materials

CFRP

Components

Component	Strength
Body1	Yield Strength
Body2	Yield Strength
arms:1/Body1	Yield Strength
arms:1/Body2	Yield Strength
arms:1/Body3	Yield Strength
arms:1/Body4	Yield Strength

Properties

Density	1.623E-06 kg / mm^3
Young's Modulus	133000.00 MPa
Poisson's Ratio	0.39
Yield Strength	300.00 MPa
Ultimate Tensile Strength	577.00 MPa
Thermal Conductivity	0.105 W / (mm K)
Thermal Expansion Coefficient	9.930E-06 / K
Specific Heat	1130.00 J / (kg K)

Contacts

Contact Type	Contact Set	Penetration Type	Bodies	Entities
Bonded				
	Bonded52	Symmetric	[Body2 Simulation Model 1:1||Body4 arms:1]	[Face 124||Face 487]
	Bonded53	Symmetric	[Body2 Simulation Model 1:1||Body3 arms:1]	[Face 124||Face 339]
	Bonded54	Symmetric	[Body2 Simulation Model 1:1||Body2 arms:1]	[Face 124||Face 191]
	Bonded55	Symmetric	[Body2 Simulation Model 1:1||Body1 arms:1]	[Face 124||Face 43]
	Bonded64	Symmetric	[Body1 Simulation Model 1:1||Body4 arms:1]	[Face 31||Face 450]
	Bonded65	Symmetric	[Body1 Simulation Model 1:1||Body3 arms:1]	[Face 31||Face 302]
	Bonded66	Symmetric	[Body1 Simulation Model 1:1||Body2 arms:1]	[Face 31||Face 154]
	Bonded67	Symmetric	[Body1 Simulation Model 1:1||Body1 arms:1]	[Face 31||Face 6]

Load Case1

Header
Report Properties
Simulation Model 1
Study 1 - Static Stress
Study Properties
Study Setup
Settings
Materials
Contacts
Load Case1
Constraints
Loads
Guided Results
Safety Factor
Results
Result Summary
Safety Factor
Stress
Displacement

Constraints	
Fixed2	

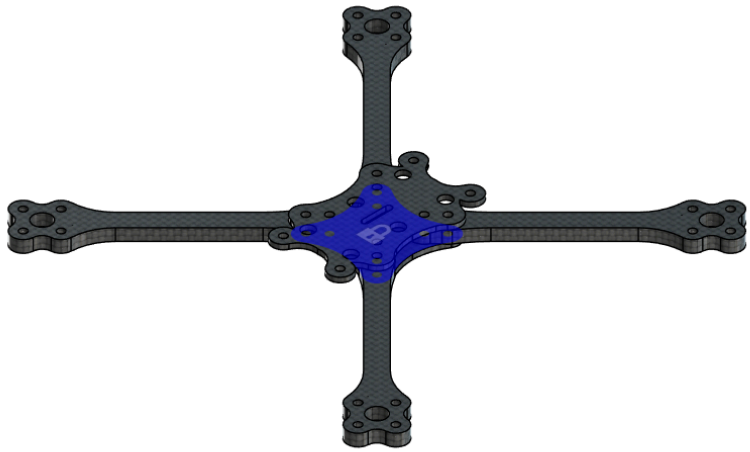

Type	Fixed
Ux	Fixed
Uy	Fixed
Uz	Fixed

Loads	
Force7	

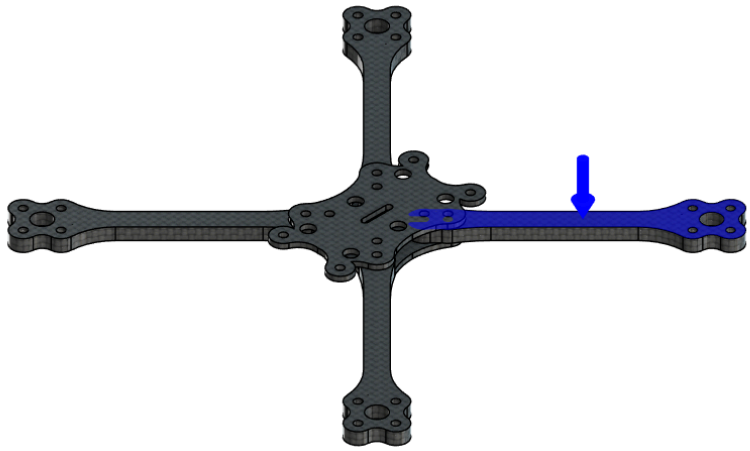

Type	Force
X Value	0.00 N
Y Value	0.00 N
Z Value	-5.00 N
Force Per Entity	No
Force8	

Header
Report Properties
Simulation Model 1
Study 1 - Static Stress
Study Properties
Study Setup
Settings
Materials
Contacts
Load Case1
Constraints
Loads
Guided Results
Safety Factor
Results
Result Summary
Safety Factor
Stress
Displacement

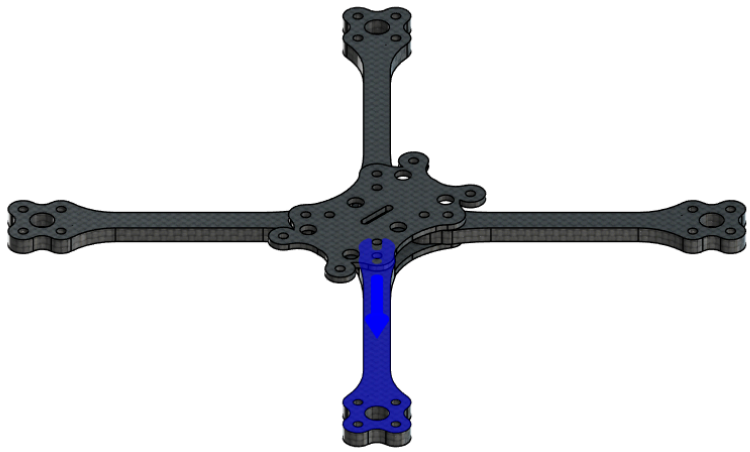

Type	Force
X Value	0.00 N
Y Value	0.00 N
Z Value	-5.00 N
Force Per Entity	No
Force9	

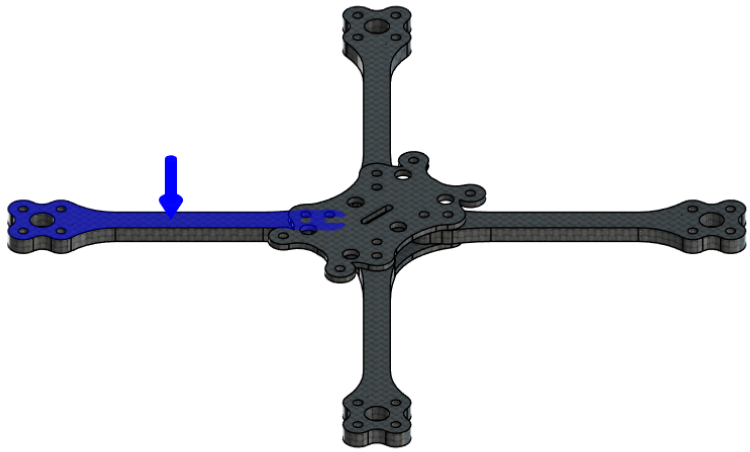

Type	Force
X Value	0.00 N
Y Value	0.00 N
Z Value	-5.00 N
Force Per Entity	No
Force10	

Header
Report Properties
Simulation Model 1
Study 1 - Static Stress
Study Properties
Study Setup
Settings
Materials
Contacts
Load Case1
Constraints
Loads
Guided Results
Safety Factor
Results
Result Summary
Safety Factor
Stress
Displacement

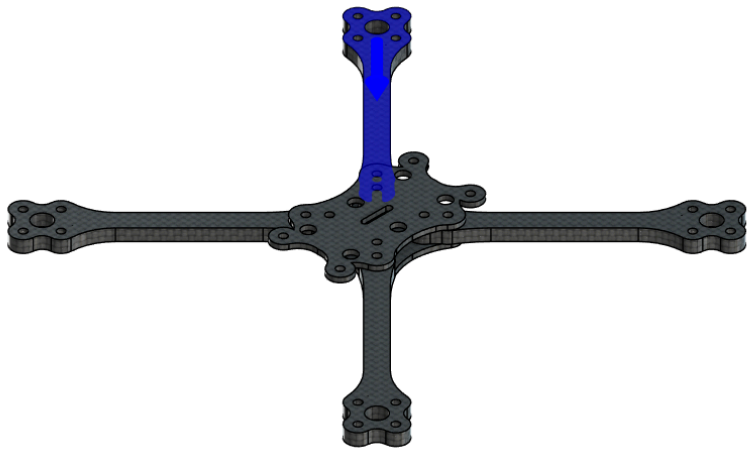

Type	Force
X Value	0.00 N
Y Value	0.00 N
Z Value	-5.00 N
Force Per Entity	No

Load Case1 - Guided Results

Safety Factor

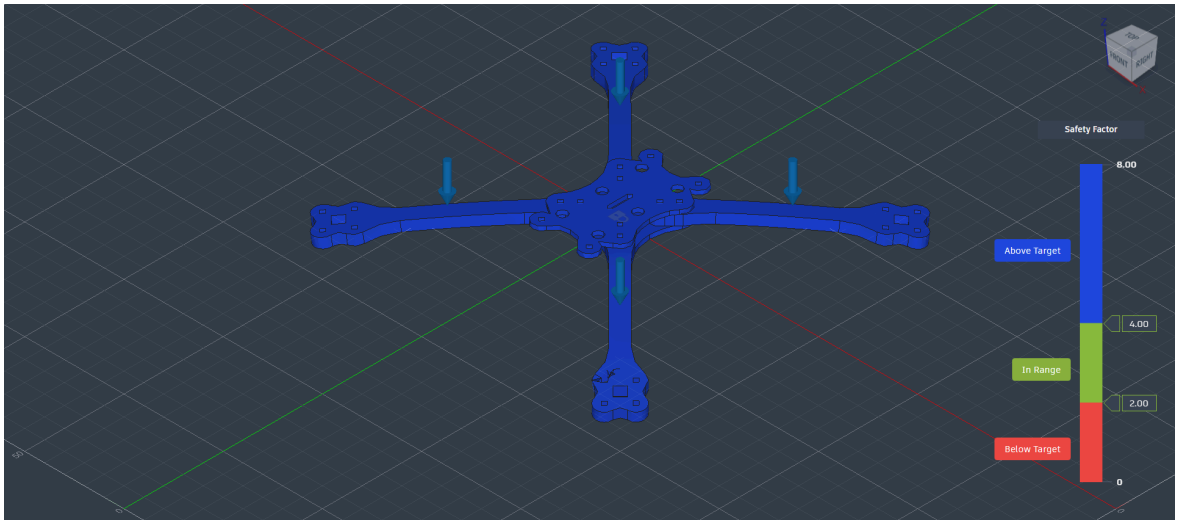

With the analysis criteria in this study setup, the design is expected to bend permanently or break.

Next Steps

Below Safety Factor Target

Validate your study setup

- Check the loads are not set too high
- Check the mesh refinement and consider increasing it in areas of high stress
- Confirm your Safety Factor requirement
- If the Displacement result shows high displacement, consider running a Nonlinear study to gain more insight

Check other results

- Examine the Below target Result visualization to see where the weakest areas are
- Check the stress result to see if, and where, the material might yield
- Check the displacement result to see how far from its original alignment the model has moved
- Look at other results, such as reaction forces to check your study set up, or strain to check your material performance

Strengthen weak areas

- Add more material to weak areas
- Select a material with a higher yield strength

Header
Report Properties
Simulation Model 1
Study 1 - Static Stress
Study Properties
Study Setup
Settings
Materials
Contacts
Load Case1
Constraints
Loads
Guided Results
Safety Factor
Results
Result Summary
Safety Factor
Stress
Displacement

	• Stiffen the design • Modify the shape with a Generative Design study
	Generate alternative designs • Add more material to weak areas • Select a material with a higher yield strength • Stiffen the design • Modify the shape with a Generative Design study
Above Safety Factor Limit	
	Validate your study setup • Check the loads are not set too high • Check the mesh refinement and consider increasing it in areas of high stress • Confirm your Safety Factor requirement • If the Displacement result shows high displacement, consider running a Nonlinear study to gain more insight
	Check other results • Examine the Below target Result visualization to see where the weakest areas are • Check the stress result to see if, and where, the material might yield • Check the displacement result to see how far from its original alignment the model has moved • Look at other results, such as reaction forces to check your study set up, or strain to check your material performance
	Lightweight the design • Set a Safety Factor upper limit to find where material can be removed • Remove material from areas that exceed the Safety Factor upper limit
	Generate alternative designs • In the Generative Design workspace, create design modifications • Remove unnecessary material using a Shape Optimization study

Load Case1 - Results

Result Summary			
Result type	Sub-result	Minimum	Maximum
Safety Factor			
	Safety Factor	15.00	110,081.164
Stress			
	Von Mises	0 MPa	1.801 MPa
	1st Principal	-0.569 MPa	2.068 MPa
	3rd Principal	-1.943 MPa	0.422 MPa
	Normal XX	-1.077 MPa	1.346 MPa
	Normal YY	-1.339 MPa	1.522 MPa
	Normal ZZ	-0.718 MPa	0.558 MPa
	Shear XY	-0.69 MPa	0.704 MPa
	Shear YZ	-0.311 MPa	0.311 MPa
	Shear XZ	-0.316 MPa	0.329 MPa
Displacement			
	Total	0 mm	0.012 mm
	X	-4.263E-04 mm	3.665E-04 mm
	Y	-4.029E-04 mm	3.478E-04 mm
	Z	-0.012 mm	1.384E-05 mm
Reaction Force			
	Total	0 N	33.547 N
	X	-15.00 N	14.901 N
	Y	-17.854 N	16.50 N
	Z	-13.177 N	25.137 N
Strain			
	Equivalent	0	1.985E-05

Header
Report Properties
Simulation Model 1
Study 1 - Static Stress
Study Properties
Study Setup
Settings
Materials
Contacts
Load Case1
Constraints
Loads
Guided Results
Safety Factor
Results
Result Summary
Safety Factor
Stress
Displacement

	1st Principal	0	1.969E-05
	3rd Principal	-2.105E-05	0
	Normal XX	-4.469E-06	5.125E-06
	Normal YY	-7.062E-06	6.413E-06
	Normal ZZ	-6.923E-06	7.477E-06
	Shear XY	-1.443E-05	1.472E-05
	Shear YZ	-6.506E-06	6.504E-06
	Shear XZ	-6.61E-06	6.87E-06
Contact Pressure			
	Total	0 MPa	0.833 MPa
	X	-0.307 MPa	0.316 MPa
	Y	-0.31 MPa	0.311 MPa
	Z	-0.53 MPa	0.718 MPa
Contact Force			
	Total	0 N	33.547 N
	X	-15.00 N	14.901 N
	Y	-17.854 N	16.50 N
	Z	-13.177 N	25.137 N

Safety Factor

Safety Factor

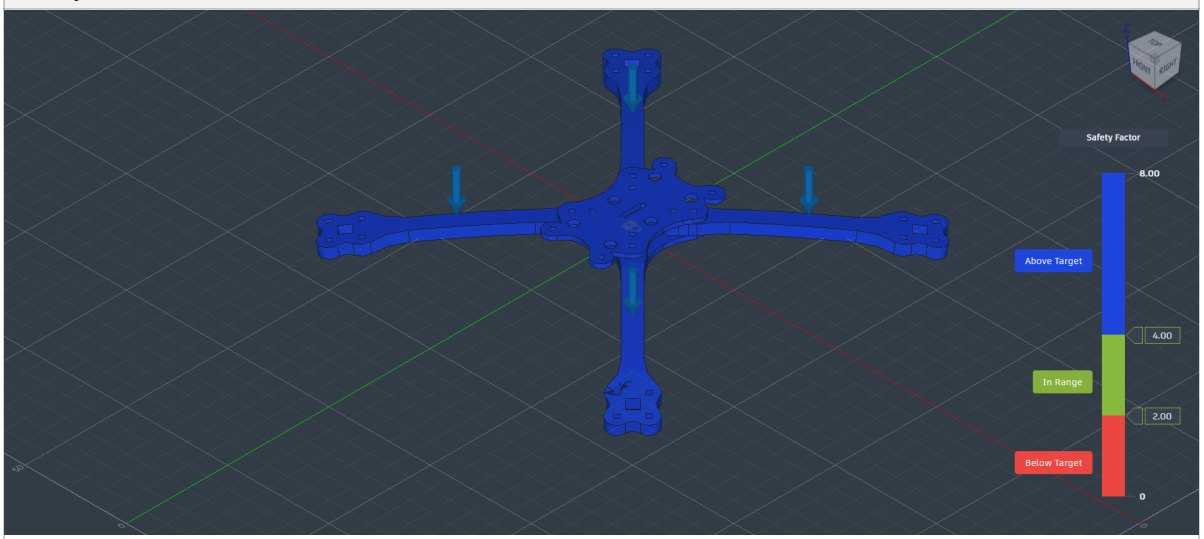

Stress

Von Mises

Header
Report Properties
Simulation Model 1
Study 1 - Static Stress
Study Properties
Study Setup
Settings
Materials
Contacts
Load Case1
Constraints
Loads
Guided Results
Safety Factor
Results
Result Summary
Safety Factor
Stress
Displacement

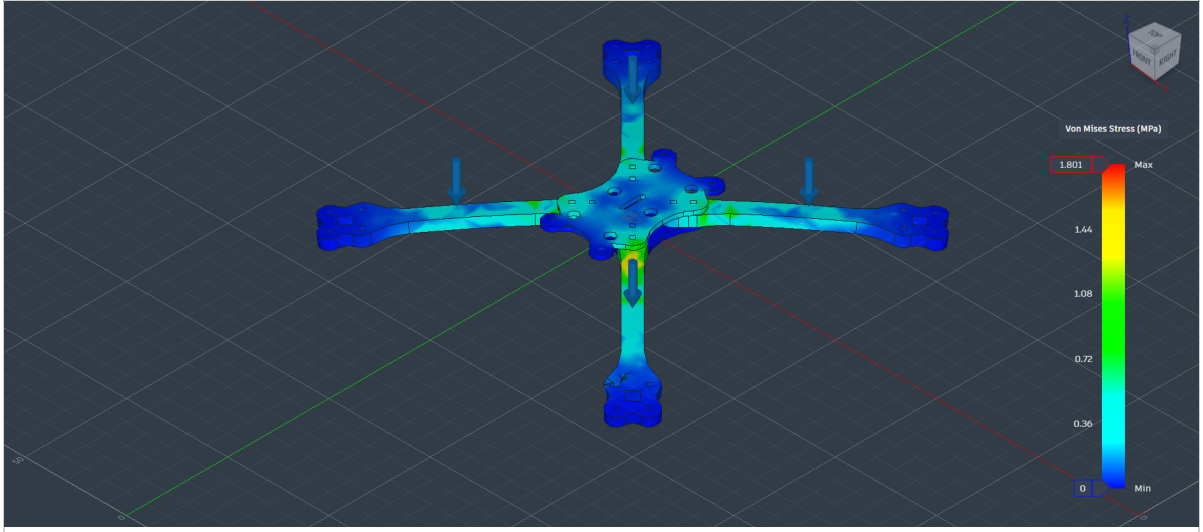

1st Principal

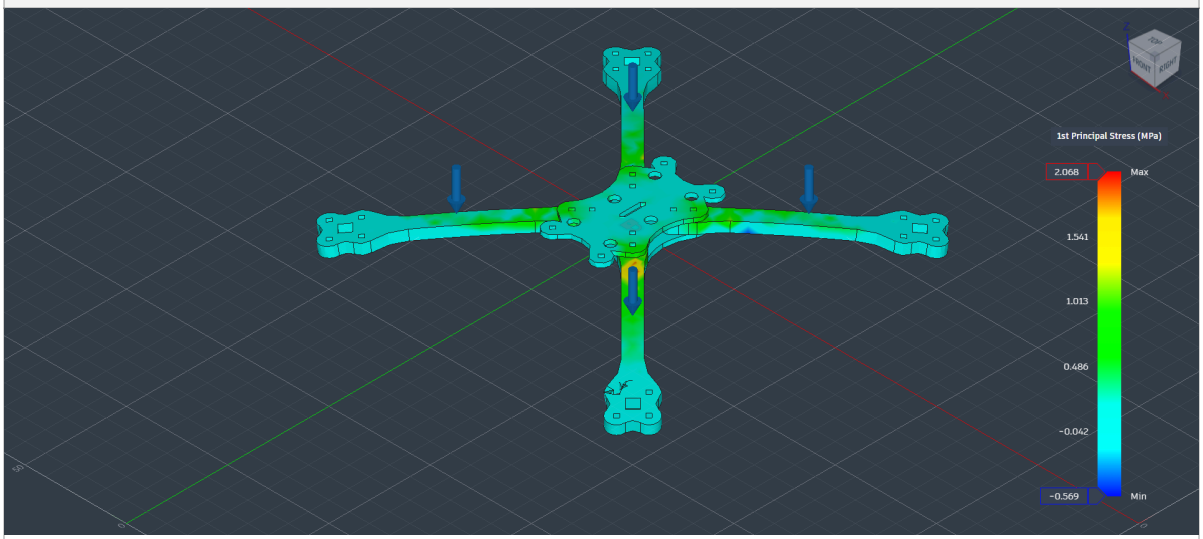

3rd Principal

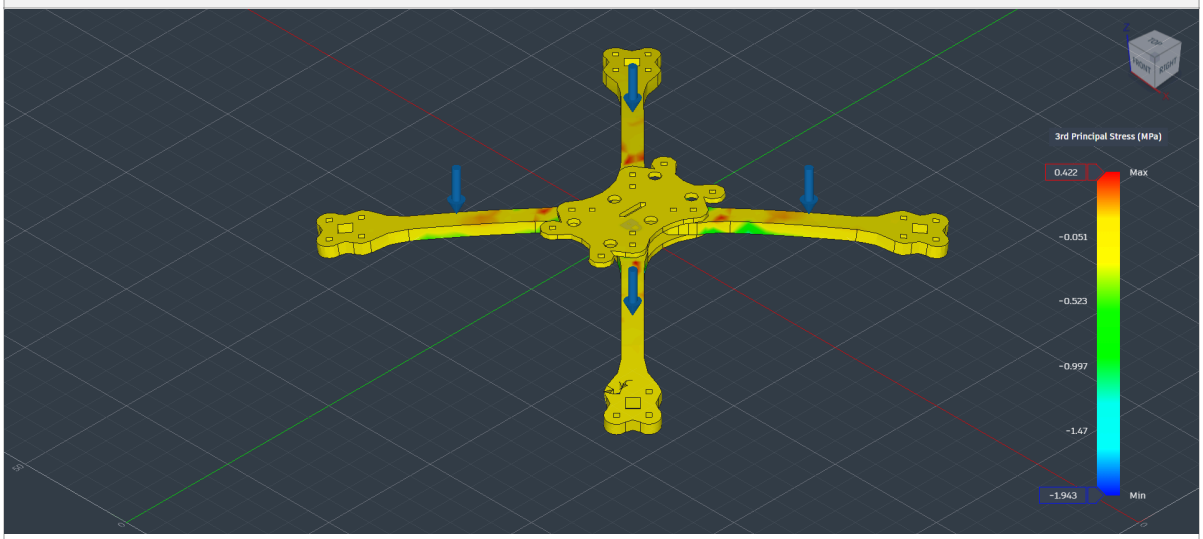

Displacement

Total
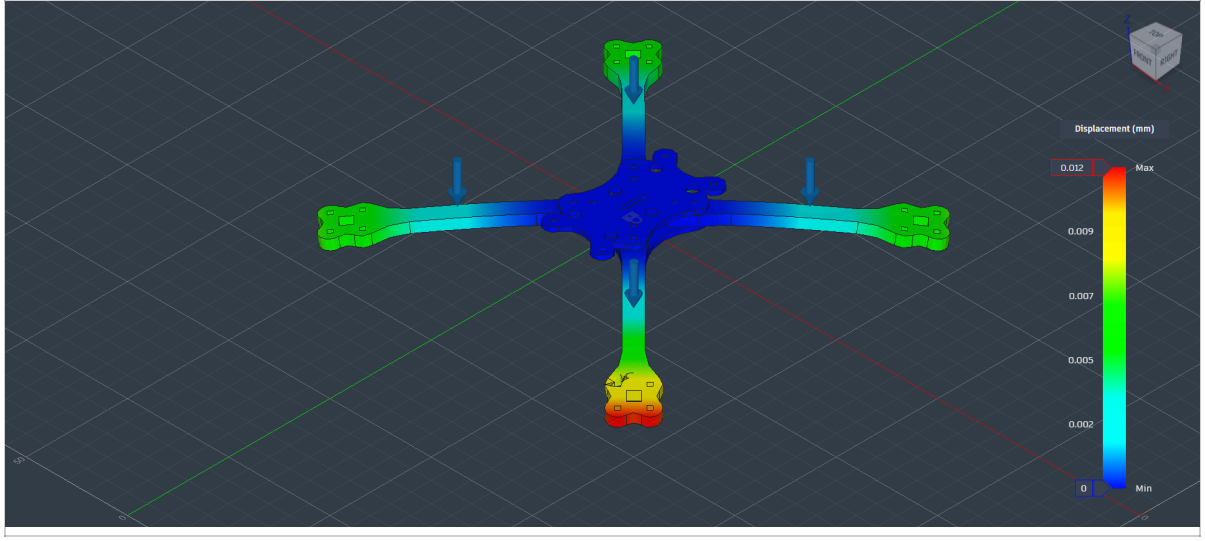
Header
Report Properties
Simulation Model 1
Study 1 - Static Stress
Study Properties
Study Setup
Settings
Materials
Contacts
Load Case1
Constraints
Loads
Guided Results
Safety Factor
Results
Result Summary
Safety Factor
Stress
Displacement