T3_Gemstone
Rev : V0.2

TOP VIEW

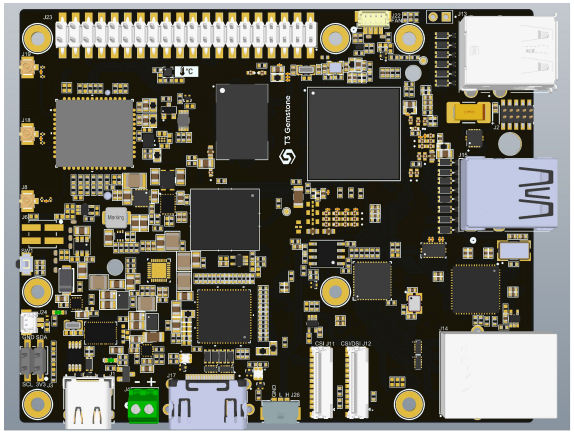

BOTTOM VIEW

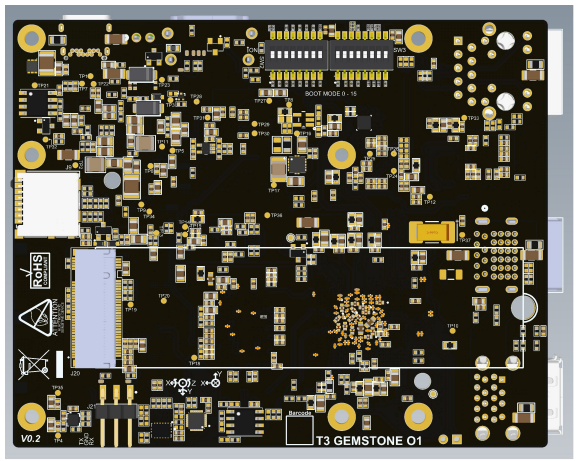

REV	DATE	DESCRIPTION
V0.1	23.07.2024	Initial release.
V0.2	15.07.2025	

T3 Gemstone

Proje / Project:	T3_Gemstone
Sayfa Adı / Page Name:	01-temp_title.SchDoc
Revizyon / Revision:	V0.2
Sayfa / Page:	1 / 33
Firma / Organization:	T3 VAKFI
Tarih / Date	15.07.2025

Page	Page Title
01	Title
02	Table_of_contents
03	Block_Diagram_General
04	Block_Diagram_Power
05	Block_Diagram_I2C
06	Power_Input
07	Main_Power_Rails
08	PMIC
09	Power_Distribution
10	SOC_Power
11	SOC_GPIO_Power - DDR_Power
12	SOC_Digital_Power
13	SOC_Ground - JTAG
14	SOC_MCU_Domain_GPIO -WKUP-Resets
15	SOC_MMC - SD CARD
16	SOC_DDR - OSPI
17	SOC_GPMC - VOUT
18	SOC_SERDES - USB
19	SOC_OLDI - Main_Domain_GPIO
20	SOC_DSI - CSI
21	RAM
22	eMMC
23	USB_Hub
24	USB_Connector
25	USB_Connector_1
26	SOC_RGMI - Ethernet_1

Page	Page Title
27	Ethernet_2
28	HDMI_Transmitter
29	HDMI_Transmitter_1
30	WiFi
31	Connectors
32	RTC - EEPROM
33	Sensors - CAN
34	
35	
36	
37	
38	
39	
40	
41	
42	
43	
44	
45	
46	
47	
48	

Page	Page Title
49	
50	
51	
52	
53	
54	
55	
56	
57	
58	
59	
60	
61	
62	
63	
64	
65	
66	
67	
68	
69	
70	

T3 Gemstone

Proje / Project:	T3_Gemstone
Sayfa Adı / Page Name:	02_temp_table_of_contents.SchDoc
Revizyon / Revision:	V0.2
Sayfa / Page:	2 / 33
Firma / Organization:	T3 VAKFI
Tarih / Date	15.07.2025

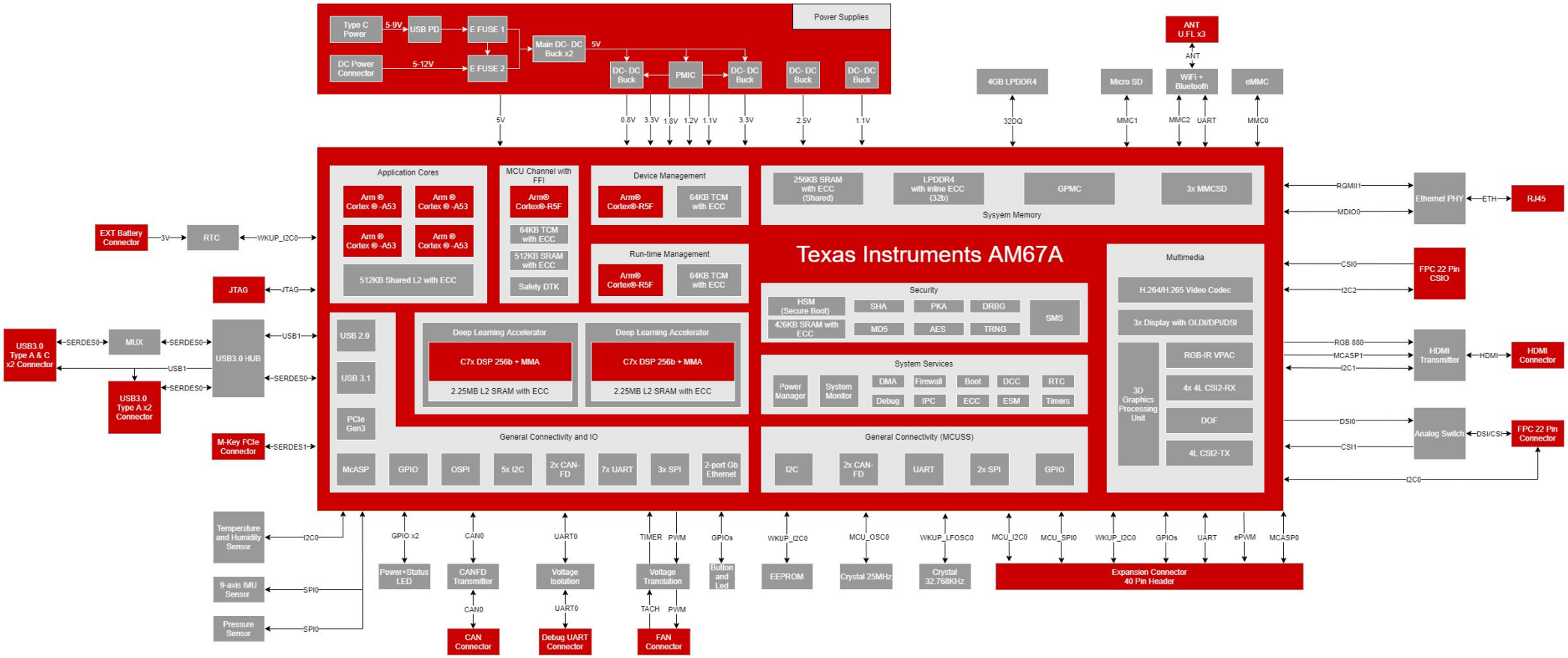

T3 Gemstone

Proje / Project:	T3_Gemstone
Sayfa Adı / Page Name:	Block_Diagram_General.SchDoc
Revizyon / Revision:	V0.2
Sayfa / Page:	3 / 33
Firma / Organization:	T3 VAKFI
Tarih / Date	15.07.2025

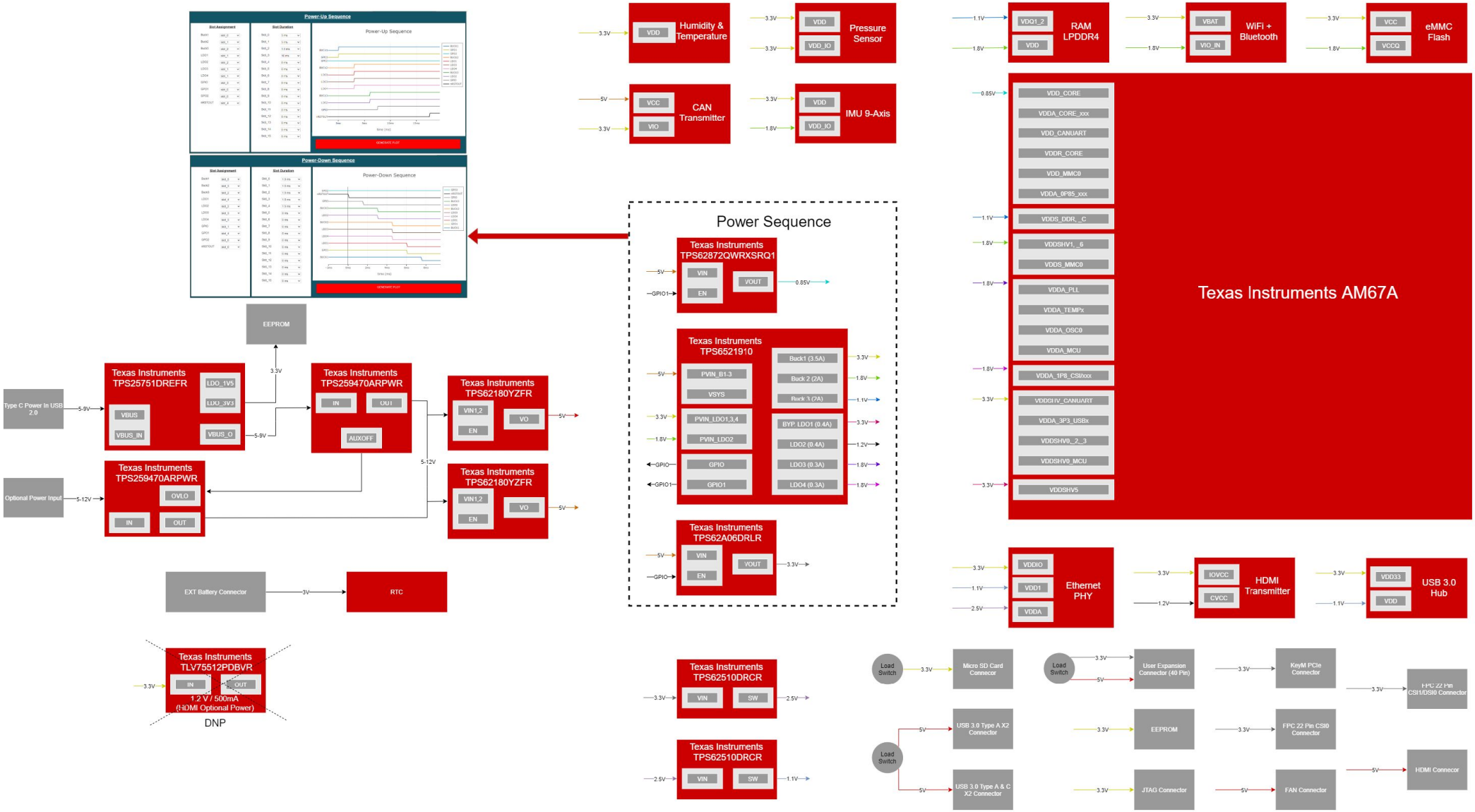

T3 Gemstone

Proje / Project:	T3_Gemstone
Sayfa Adı / Page Name:	Block_Diagram_Power.SchDoc
Revizyon / Revision:	V0.2
Sayfa / Page:	4 / 33
Firma / Organization:	T3 VAKFI
Tarih / Date	15.07.2025

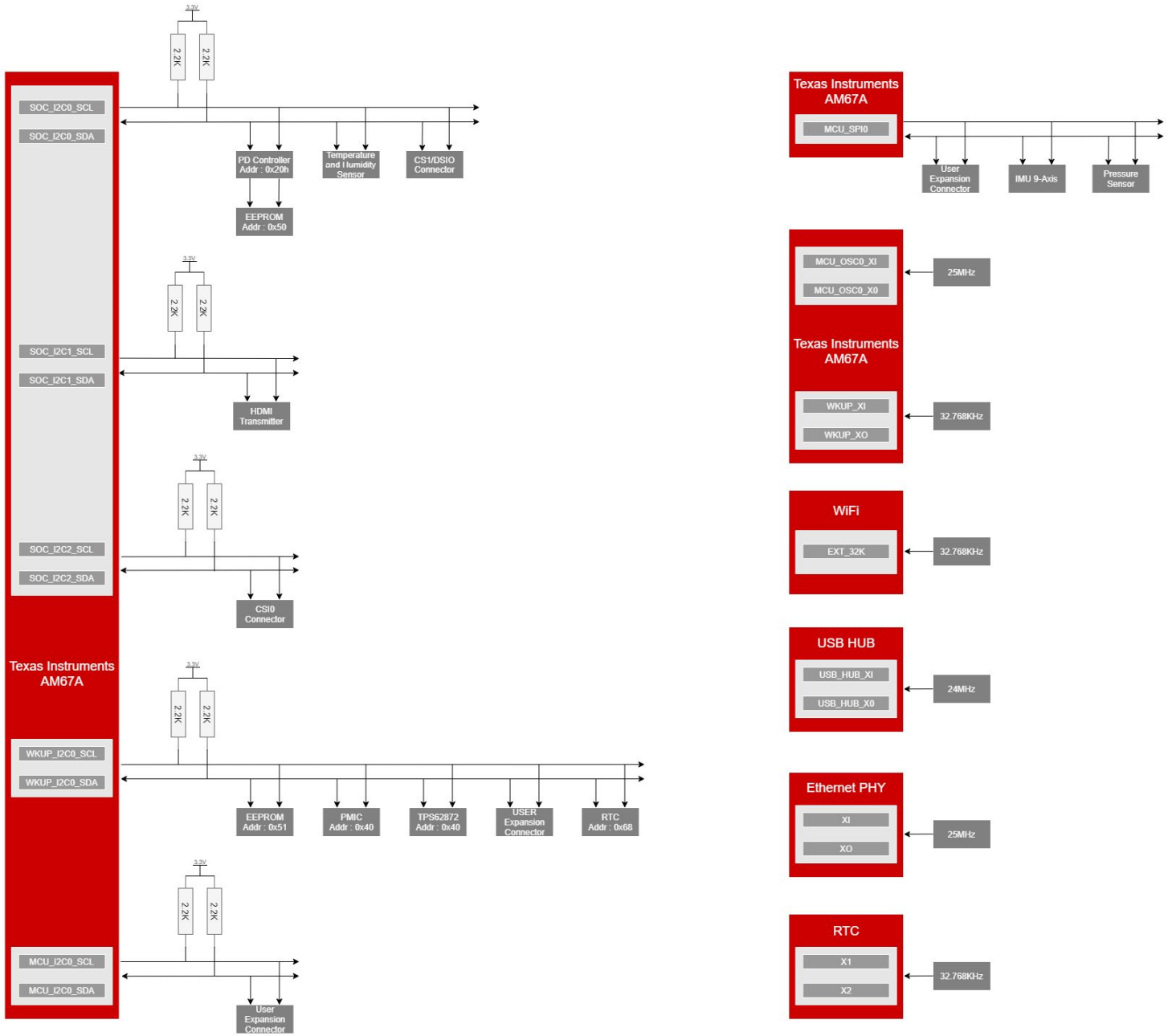

T3 Gemstone

Proje / Project:	T3_Gemstone
Sayfa Adı / Page Name:	Block_Diagram_I2C.SchDoc
Revizyon / Revision:	V0.2
Sayfa / Page:	5 / 33
Firma / Organization:	T3 VAKFI
Tarih / Date	15.07.2025

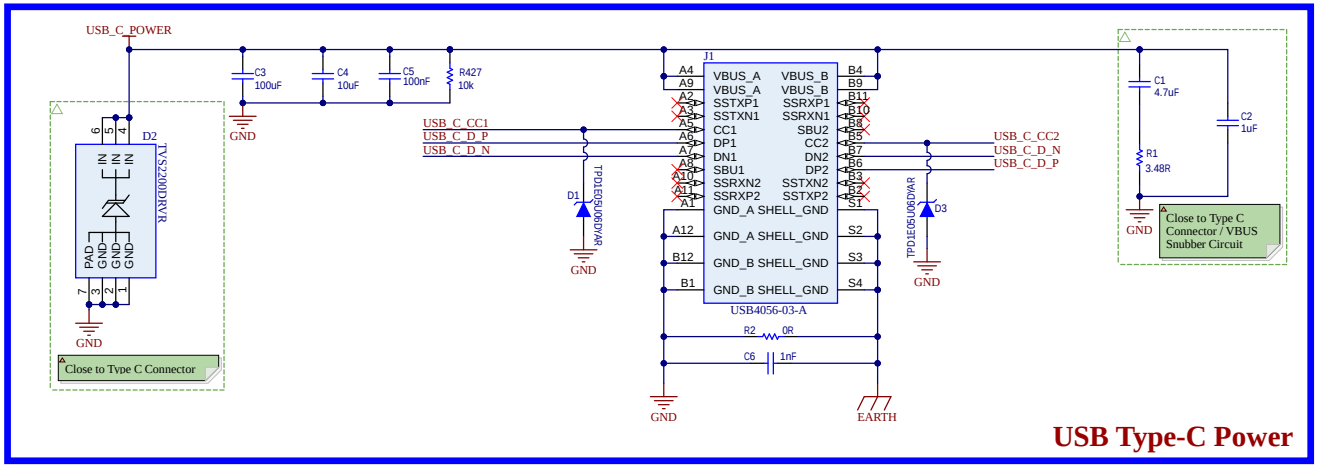

USB Type-C Power

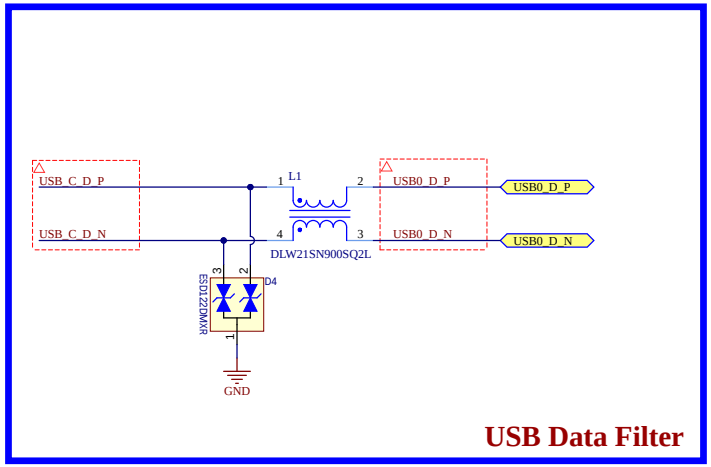

USB Data Filter

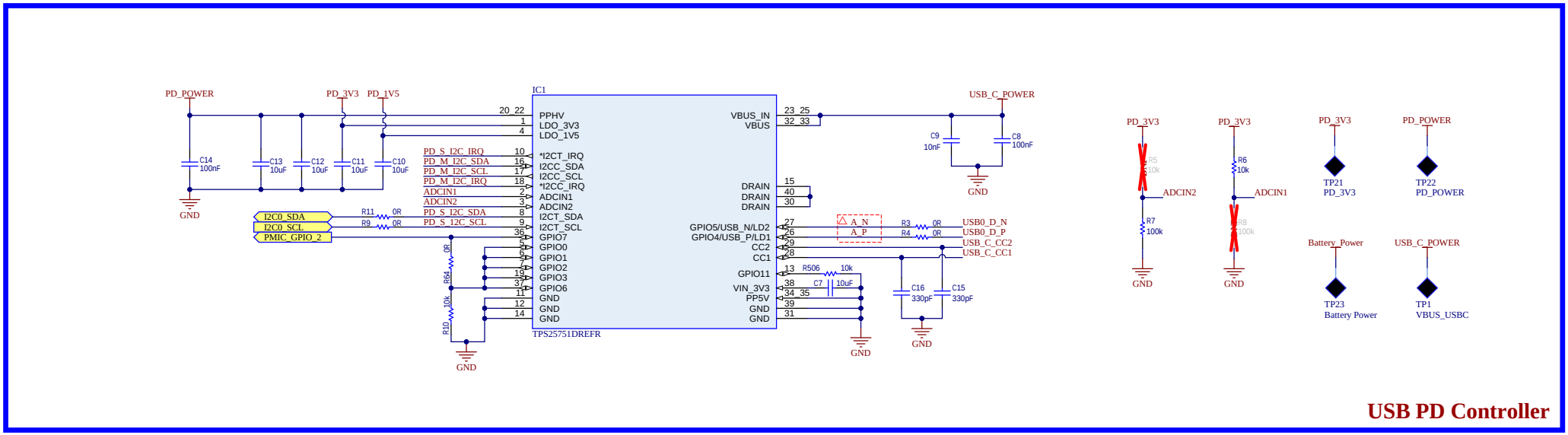

USB PD Controller

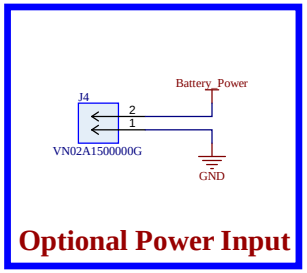

Optional Power Input

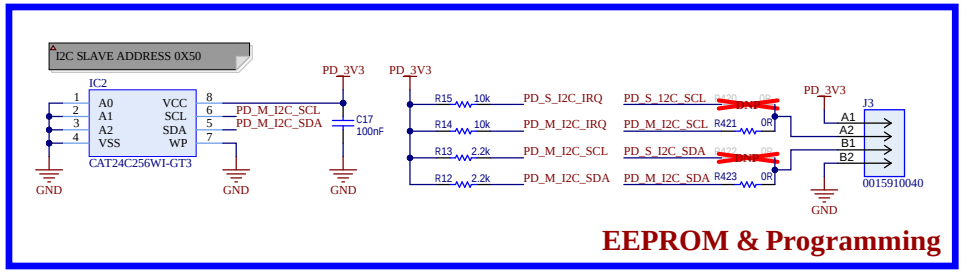

EEPROM & Programming

Fiducial

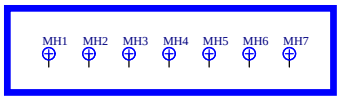

T3 Gemstone

Proje / Project:	T3_Gemstone
Sayfa Adı / Page Name:	Power_Input.SchDoc
Revizyon / Revision:	V0.2
Sayfa / Page:	6 / 33
Firma / Organization:	T3 VAKFI
Tarih / Date	15.07.2025

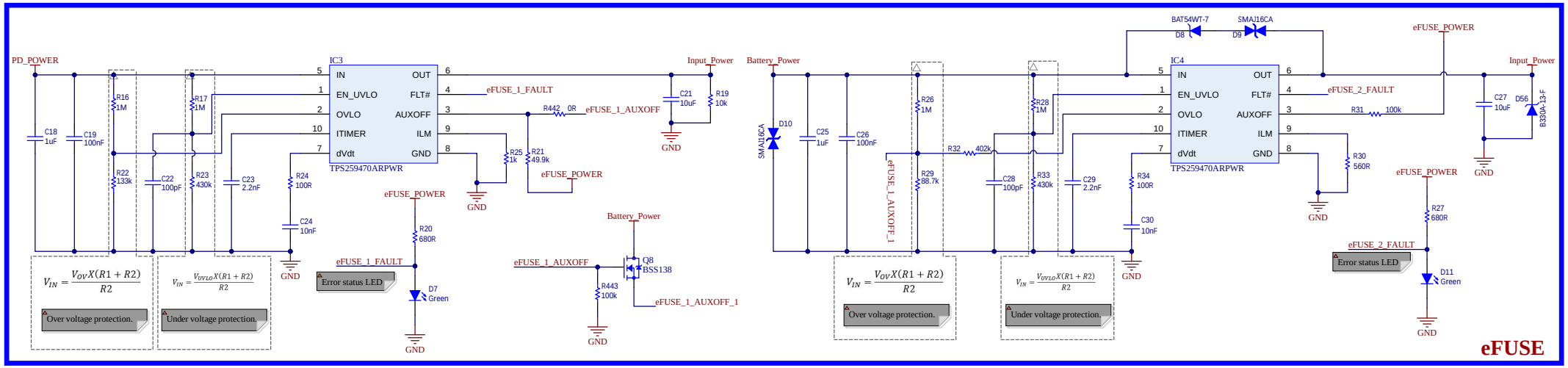

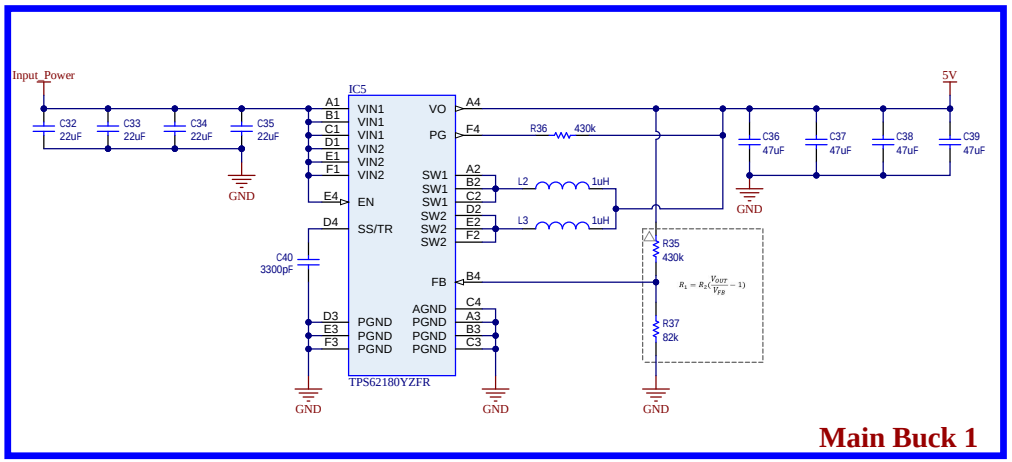

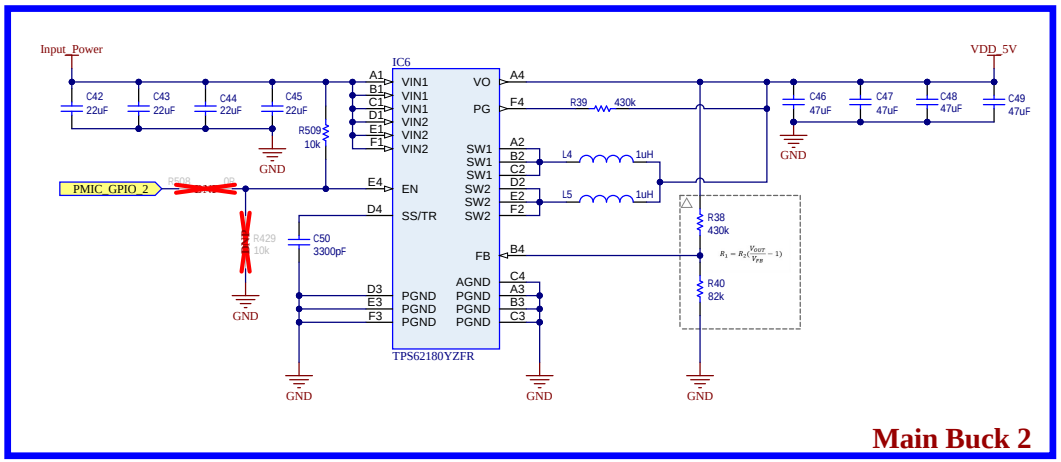

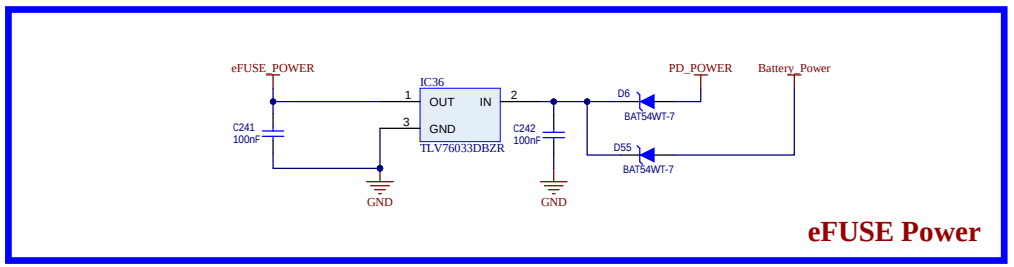

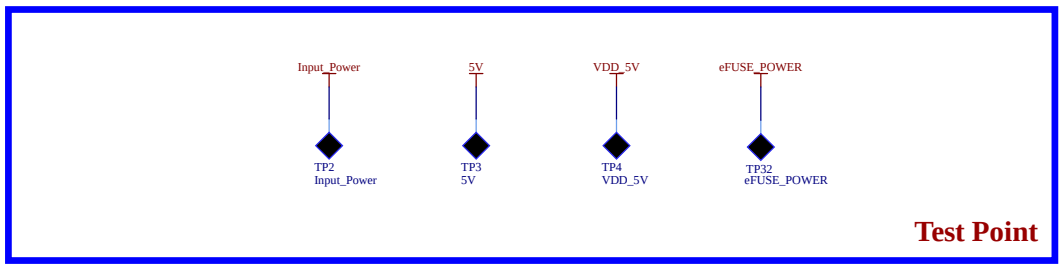

T3 Gemstone

Proje / Project:	T3_Gemstone
Sayfa Adı / Page Name:	Main_Power_Rails.SchDoc
Revizyon / Revision:	V0.2
Sayfa / Page:	7 / 33
Firma / Organization:	T3 VAKFI
Tarih / Date	15.07.2025

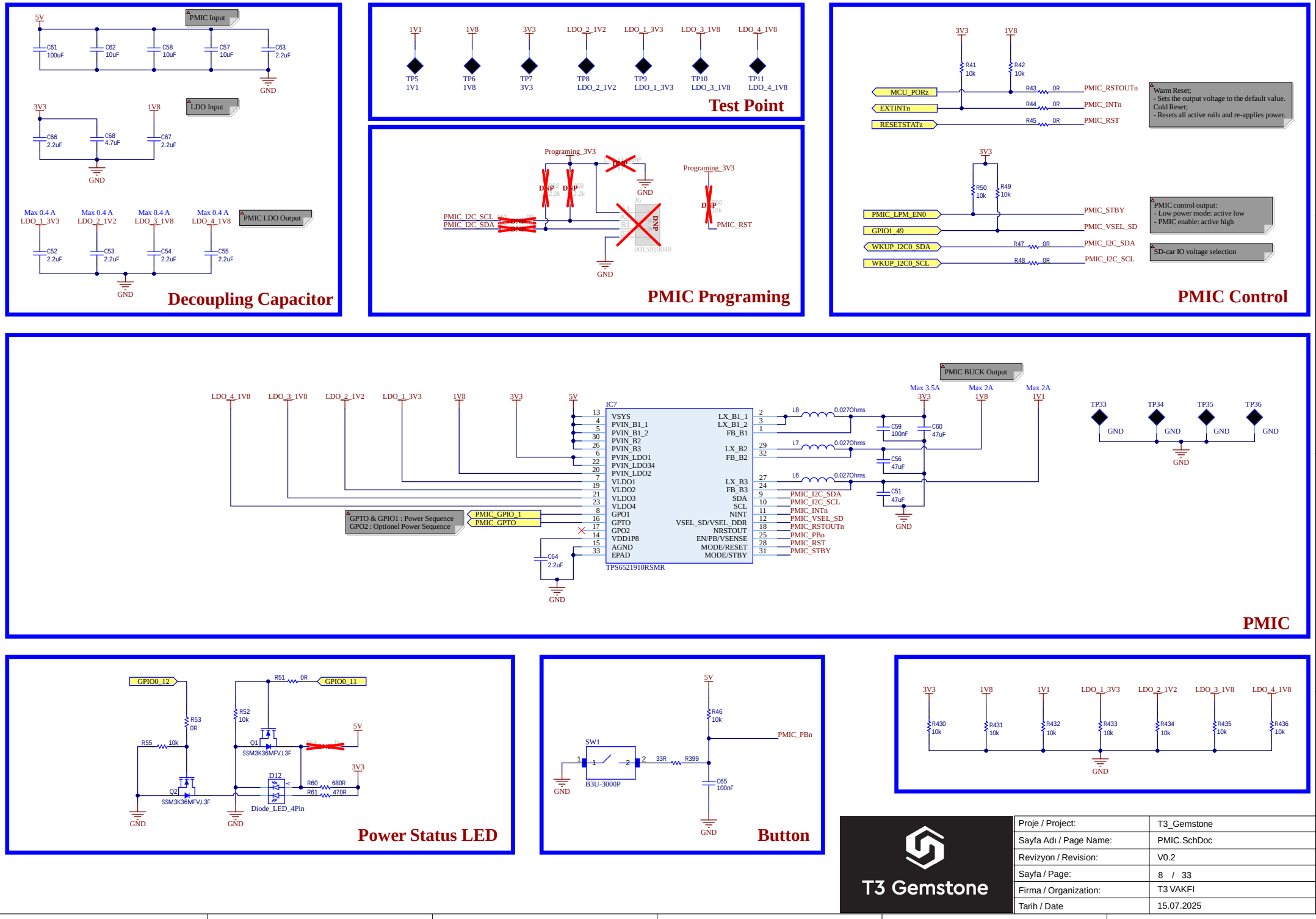
Decoupling Capacitor
PMIC Input
5V
C61 100uF
C62 10uF
C58 10uF
C57 10uF
C63 2.2uF
GND
LDO Input
3V3
1V8
C66 2.2uF
C68 4.7uF
C67 2.2uF
PMIC LDO Output
Max 0.4 A LDO_1_3V3
Max 0.4 A LDO_2_1V2
Max 0.4 A LDO_3_1V8
Max 0.4 A LDO_4_1V8
C52 2.2uF
C53 2.2uF
C54 2.2uF
C55 2.2uF
Test Point
1V1
1V8
3V3
LDO_2_1V2
LDO_1_3V3
LDO_3_1V8
LDO_4_1V8
TP5 1V1
TP6 1V8
TP7 3V3
TP8 LDO_2_1V2
TP9 LDO_1_3V3
TP10 LDO_3_1V8
TP11 LDO_4_1V8
PMIC Programing
Programing_3V3
DNP
PMIC_I2C_SCL
PMIC_I2C_SDA
PMIC_RST
PMIC Control
3V3
1V8
R41 10k
R42 10k
MCU_PORz
EXTINTn
RESETSTATz
R43 0R
R44 0R
R45 0R
PMIC_RSTOUTn
PMIC_INTn
PMIC_RST
Warm Reset;
- Sets the output voltage to the default value.
Cold Reset;
- Resets all active rails and re-applies power.
R50 10k
R49 10k
PMIC_LPM_EN0
GPIO1_49
WKUP_I2C0_SDA
WKUP_I2C0_SCL
R47 0R
R48 0R
PMIC_STBY
PMIC_VSEL_SD
PMIC_I2C_SDA
PMIC_I2C_SCL
PMIC control output:
- Low power mode: active low
- PMIC enable: active high
SD-car IO voltage selection
PMIC
PMIC BUCK Output
Max 3.5A 3V3
Max 2A 1V8
Max 2A 1V1
LDO_4_1V8
LDO_3_1V8
LDO_2_1V2
LDO_1_3V3
1V8
3V3
5V
IC7
VSYS
PVIN_B1_1
PVIN_B1_2
PVIN_B2
PVIN_B3
PVIN_LDO1
PVIN_LDO34
PVIN_LDO2
VLDO1
VLDO2
VLDO3
VLDO4
GPO1
GPTO
GPO2
VDD1P8
AGND
EPAD
LX_B1_1
LX_B1_2
FB_B1
LX_B2
FB_B2
LX_B3
FB_B3
SDA
SCL
NINT
VSEL_SD/VSEL_DDR
NRSTOUT
EN/PB/VSENSE
MODE/RESET
MODE/STBY
TPS6521910RSMR
L8 0.027Ohms
L7 0.027Ohms
L6 0.027Ohms
C59 100nF
C60 47uF
C56 47uF
C51 47uF
C64 2.2uF
GPTO & GPIO1 : Power Sequence
GPO2 : Optionel Power Sequence
PMIC_GPIO_1
PMIC_GPTO
PMIC_I2C_SDA
PMIC_I2C_SCL
PMIC_INTn
PMIC_VSEL_SD
PMIC_RSTOUTn
PMIC_PBn
PMIC_RST
PMIC_STBY
TP33
TP34
TP35
TP36
Power Status LED
GPIO0_12
GPIO0_11
R51 0R
R53 0R
R52 10k
R55 10k
Q1 SSM3K36MFV,L3F
Q2 SSM3K36MFV,L3F
D12 Diode_LED_4Pin
R60 680R
R61 470R
Button
SW1 B3U-3000P
R46 10k
R399 33R
C65 100nF
PMIC_PBn
R430 10k
R431 10k
R432 10k
R433 10k
R434 10k
R435 10k
R436 10k
T3 Gemstone
Proje / Project: T3_Gemstone
Sayfa Adı / Page Name: PMIC.SchDoc
Revizyon / Revision: V0.2
Sayfa / Page: 8 / 33
Firma / Organization: T3 VAKFI
Tarih / Date 15.07.2025

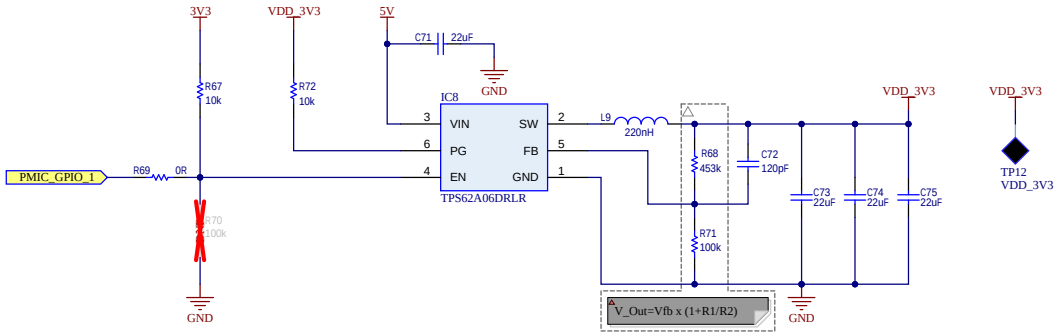

3.3 Volt Output

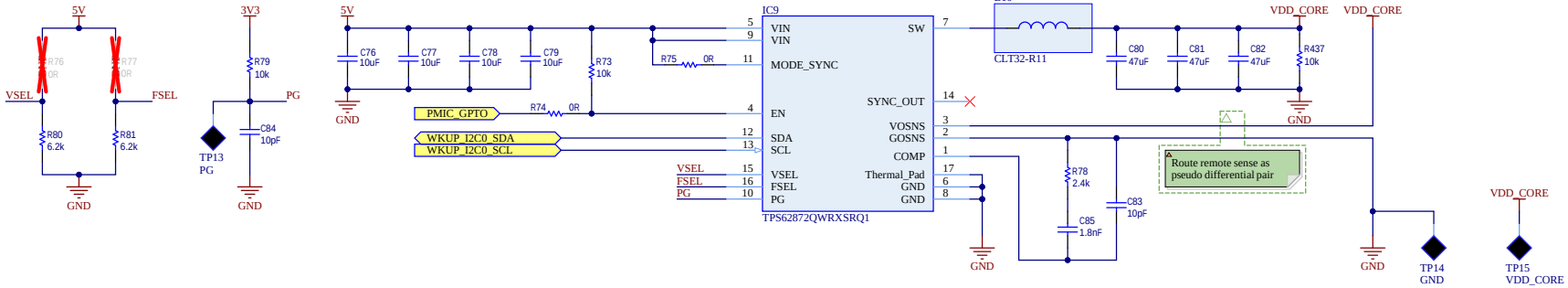

SoC Supply Output

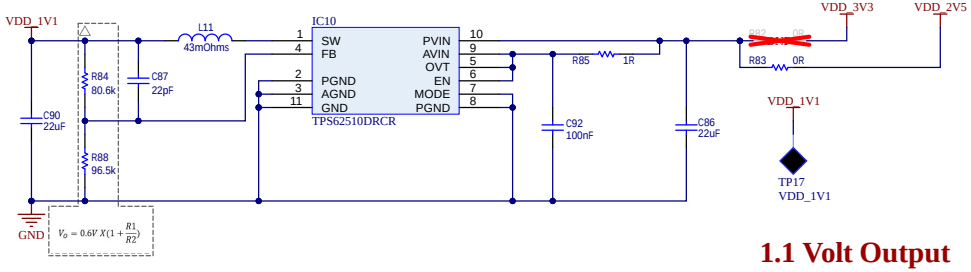

1.1 Volt Output

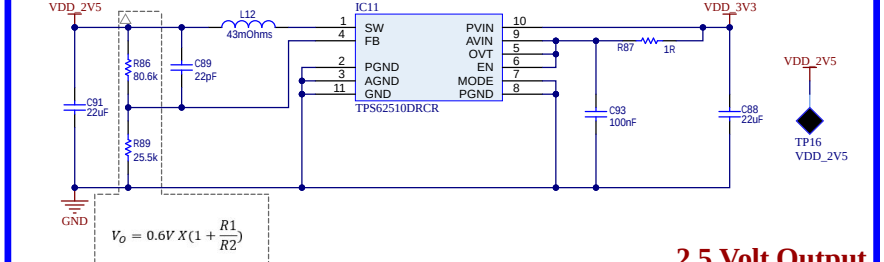

2.5 Volt Output

T3 Gemstone

Proje / Project:	T3_Gemstone
Sayfa Adı / Page Name:	Power_Distribution.SchDoc
Revizyon / Revision:	V0.2
Sayfa / Page:	9 / 33
Firma / Organization:	T3 VAKFI
Tarih / Date	15.07.2025

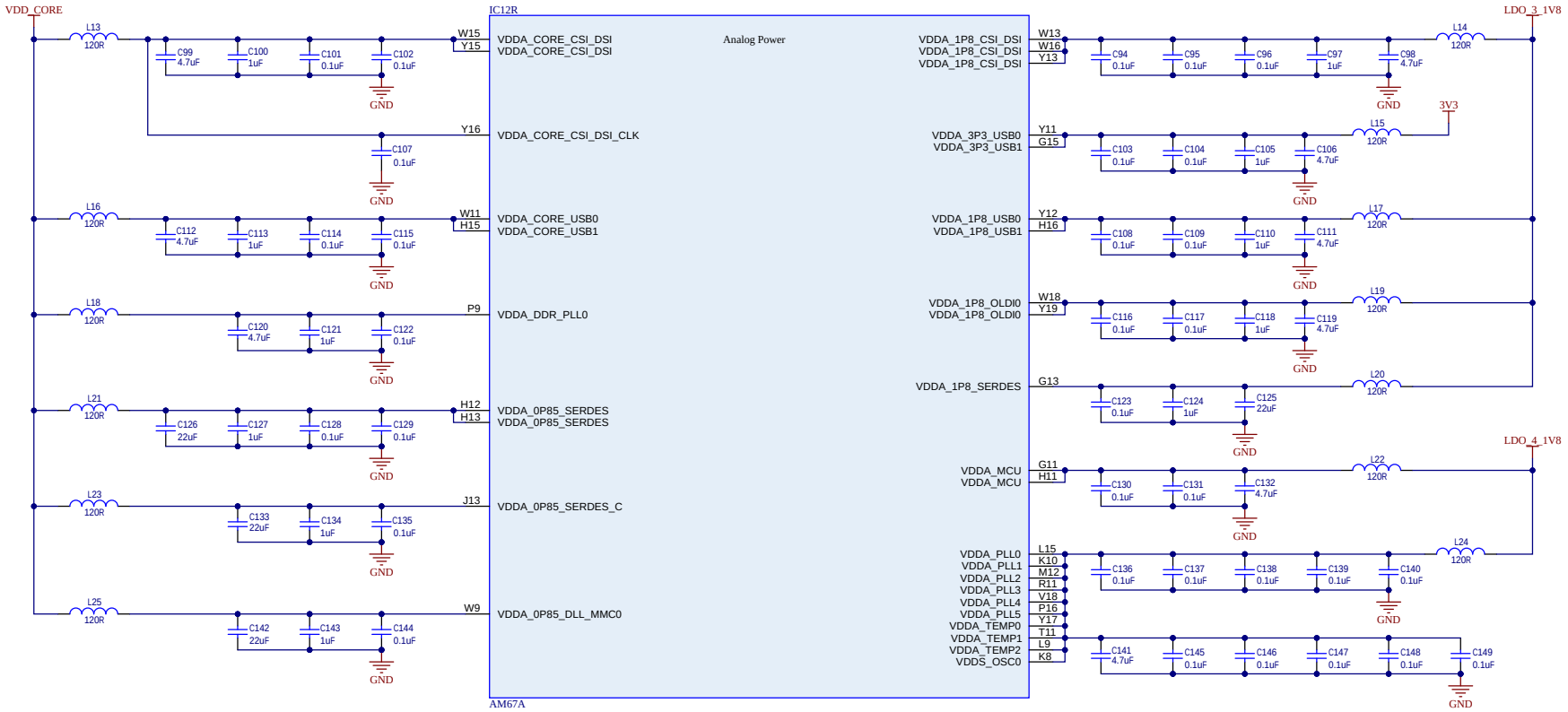

SoC Analog Power

Proje / Project:	T3_Gemstone
Sayfa Adı / Page Name:	SOC_Power.SchDoc
Revizyon / Revision:	V0.2
Sayfa / Page:	10 / 33
Firma / Organization:	T3 VAKFI
Tarih / Date	15.07.2025

T3 Gemstone

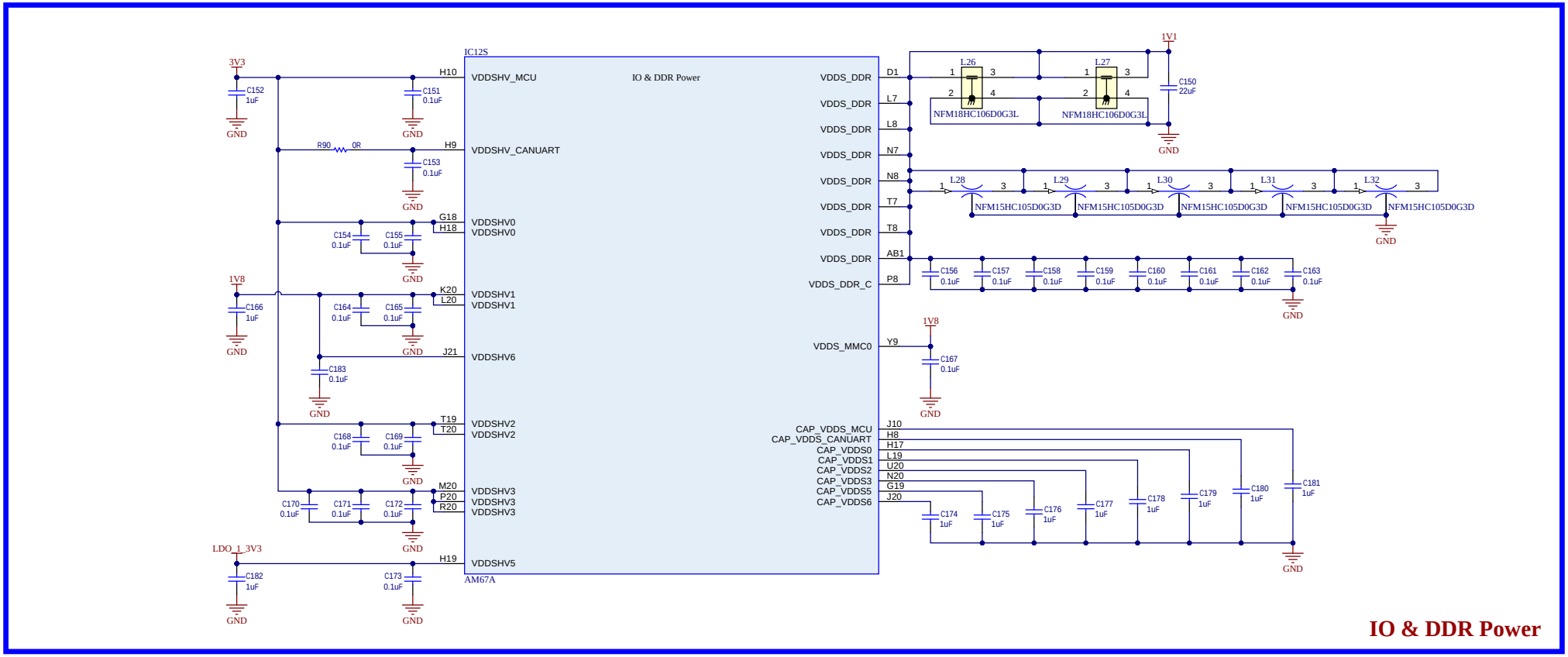

Proje / Project:	T3_Gemstone
Sayfa Adı / Page Name:	SOC_GPIO_Power - DDR_Power.SchDoc
Revizyon / Revision:	V0.2
Sayfa / Page:	11 / 33
Firma / Organization:	T3 VAKFI
Tarih / Date	15.07.2025

T3 Gemstone

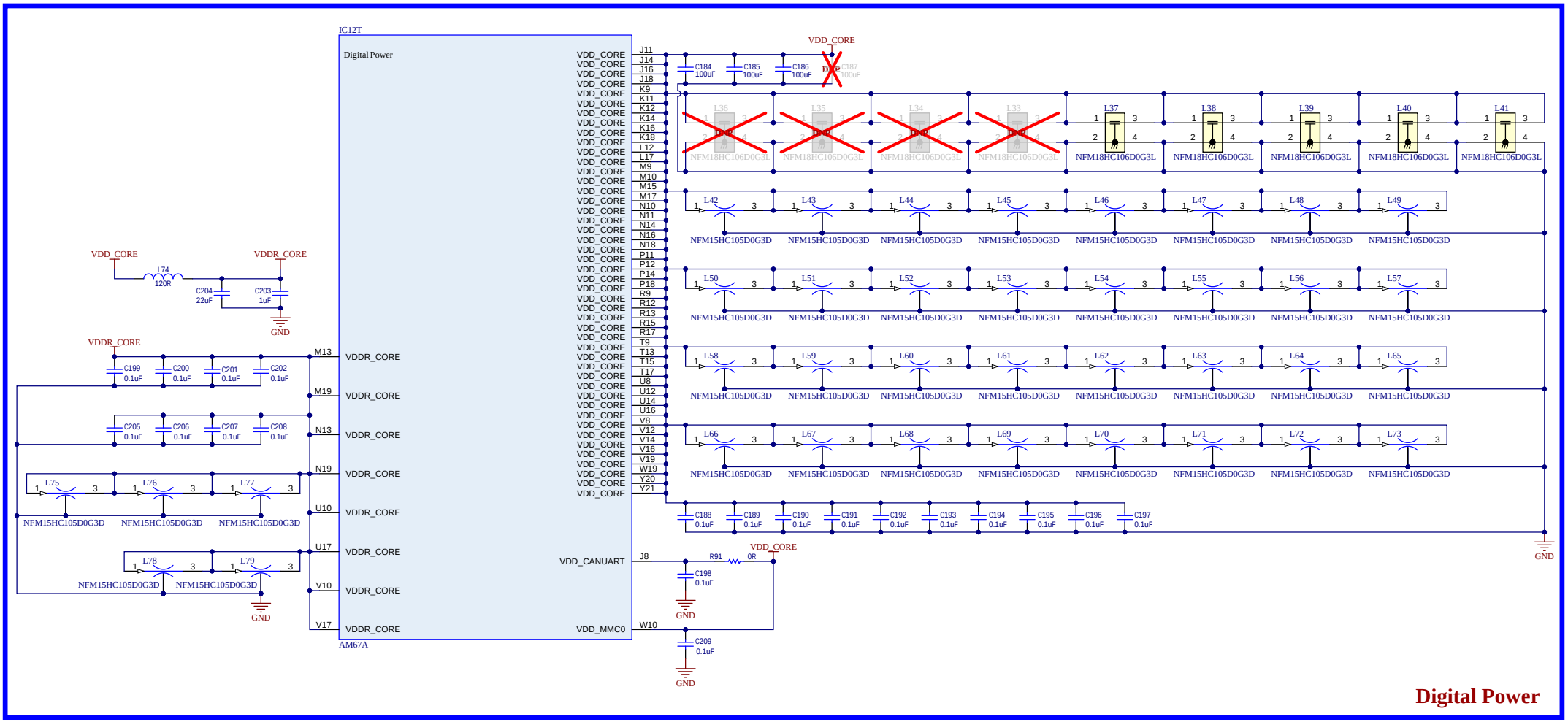

Proje / Project:	T3_Gemstone
Sayfa Adı / Page Name:	SOC_Digital_Power.SchDoc
Revizyon / Revision:	V0.2
Sayfa / Page:	12 / 33
Firma / Organization:	T3 VAKFI
Tarih / Date	15.07.2025

T3 Gemstone

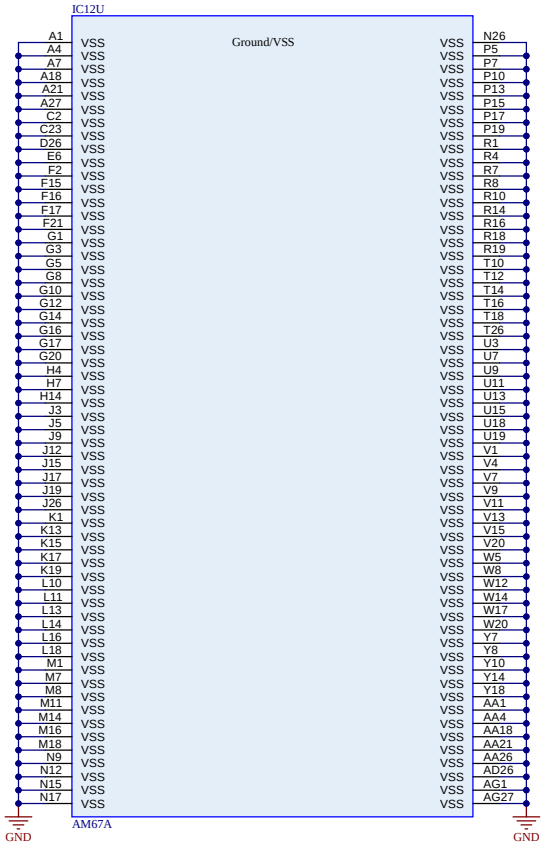

SoC Ground

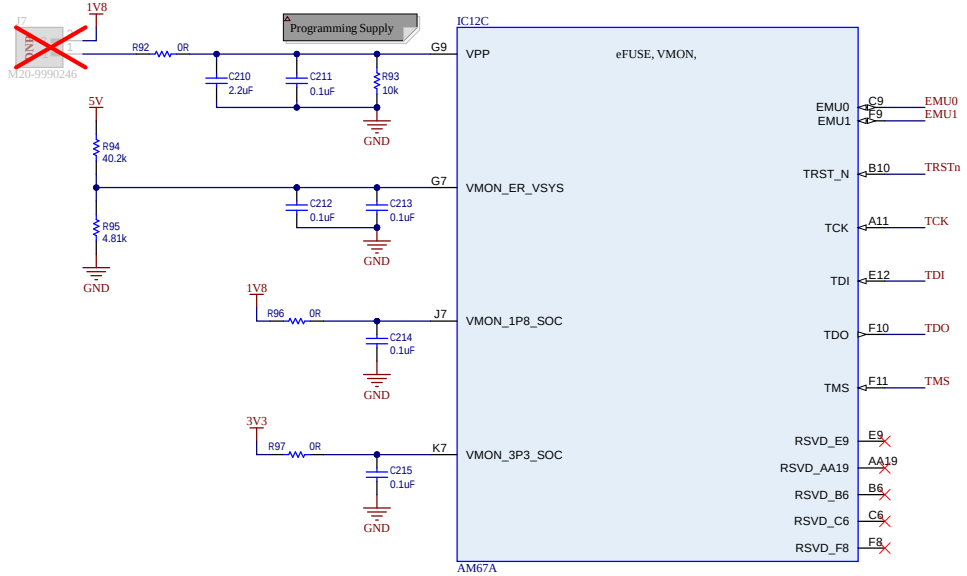

JTAG & VMON

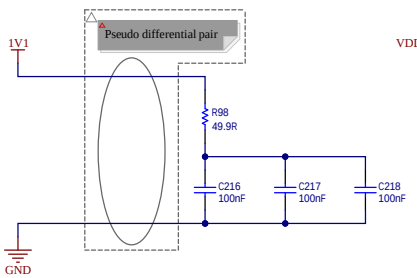

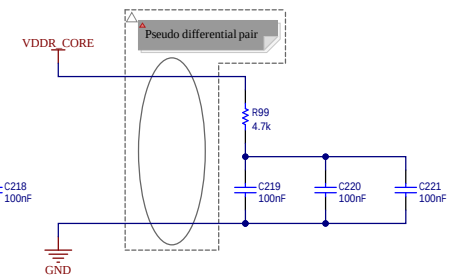

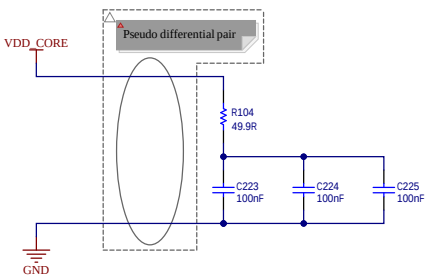

SoC Supply Noise Kelvin Sensing

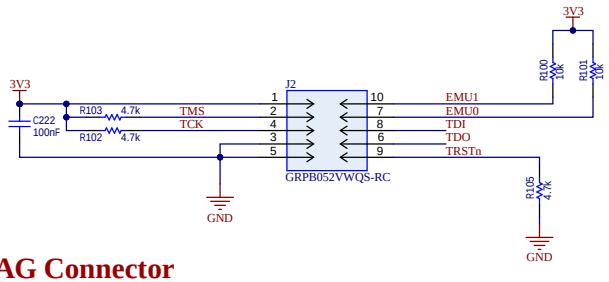

JTAG Connector

Proje / Project:	T3_Gemstone
Sayfa Adı / Page Name:	SOC_Ground - JTAG.SchDoc
Revizyon / Revision:	V0.2
Sayfa / Page:	13 / 33
Firma / Organization:	T3 VAKFI
Tarih / Date	15.07.2025

T3 Gemstone

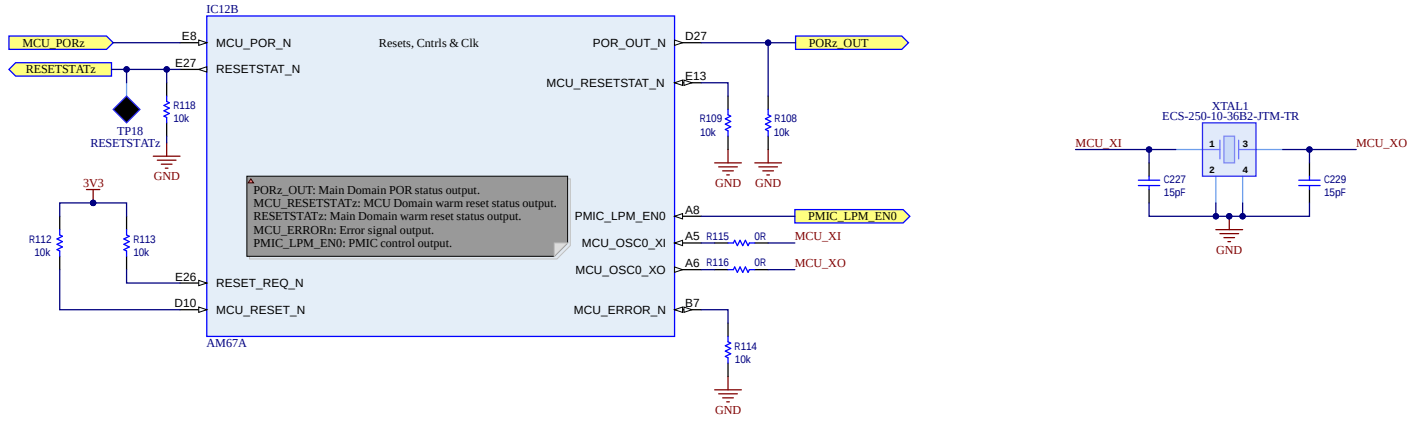

Resets, Cntrls & Clk

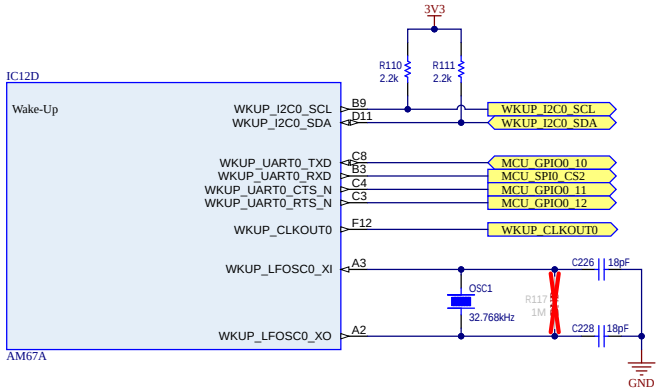

Wake-Up Domain

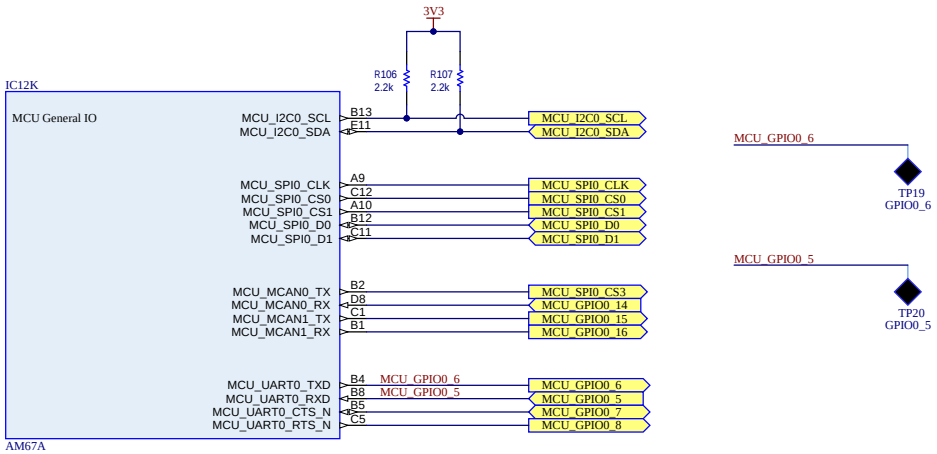

MCU Domain General IO

Proje / Project:	T3_Gemstone
Sayfa Adı / Page Name:	SOC_MCU_Domain_GPIO - WKUP - Resets.Sc
Revizyon / Revision:	V0.2
Sayfa / Page:	14 / 33
Firma / Organization:	T3 VAKFI
Tarih / Date	15.07.2025

T3 Gemstone

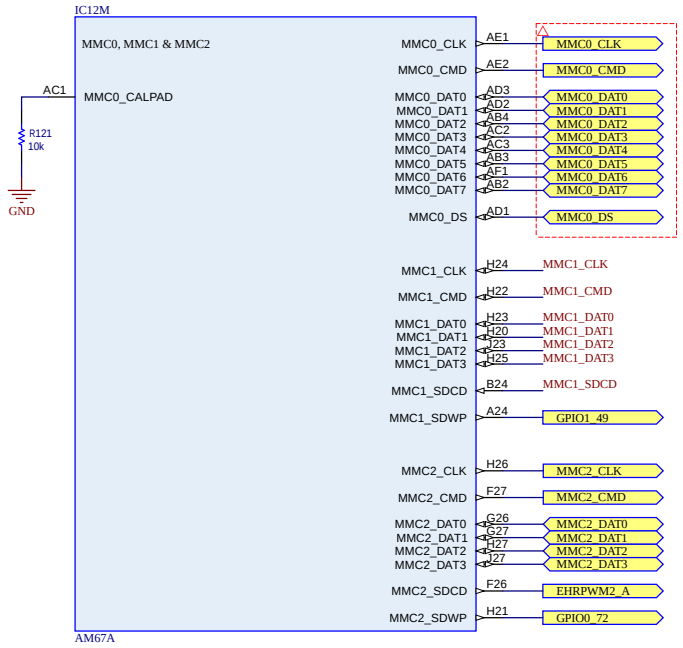

MMC0, MMC1 & MMC2

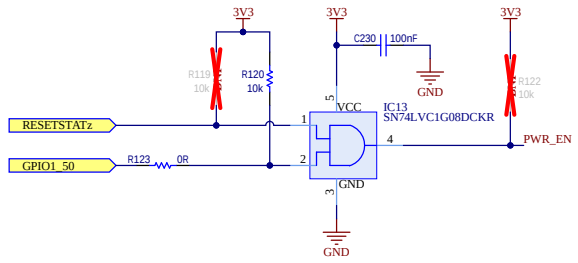

AND Gate

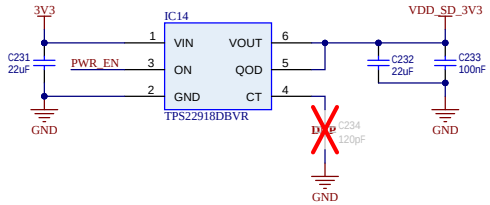

uSD Card Load Switch

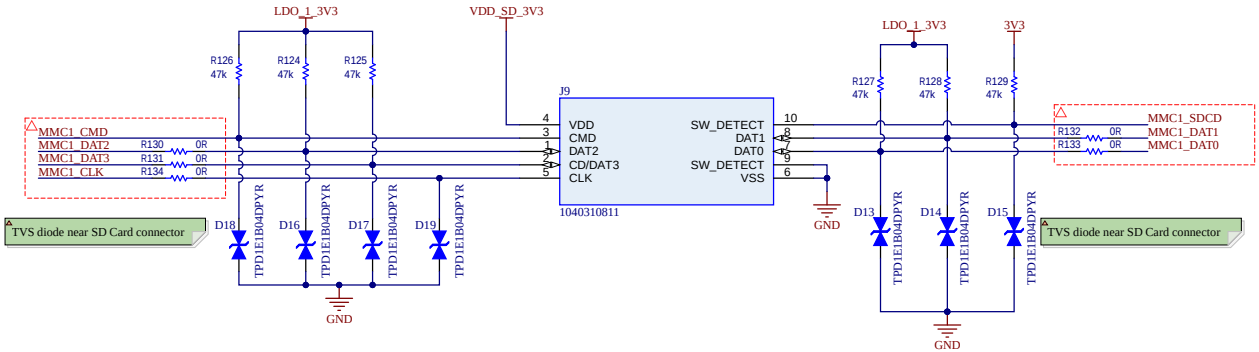

uSD Card

Proje / Project:	T3_Gemstone
Sayfa Adı / Page Name:	SOC_MMC - SD CARD.SchDoc
Revizyon / Revision:	V0.2
Sayfa / Page:	15 / 33
Firma / Organization:	T3 VAKFI
Tarih / Date	15.07.2025

T3 Gemstone

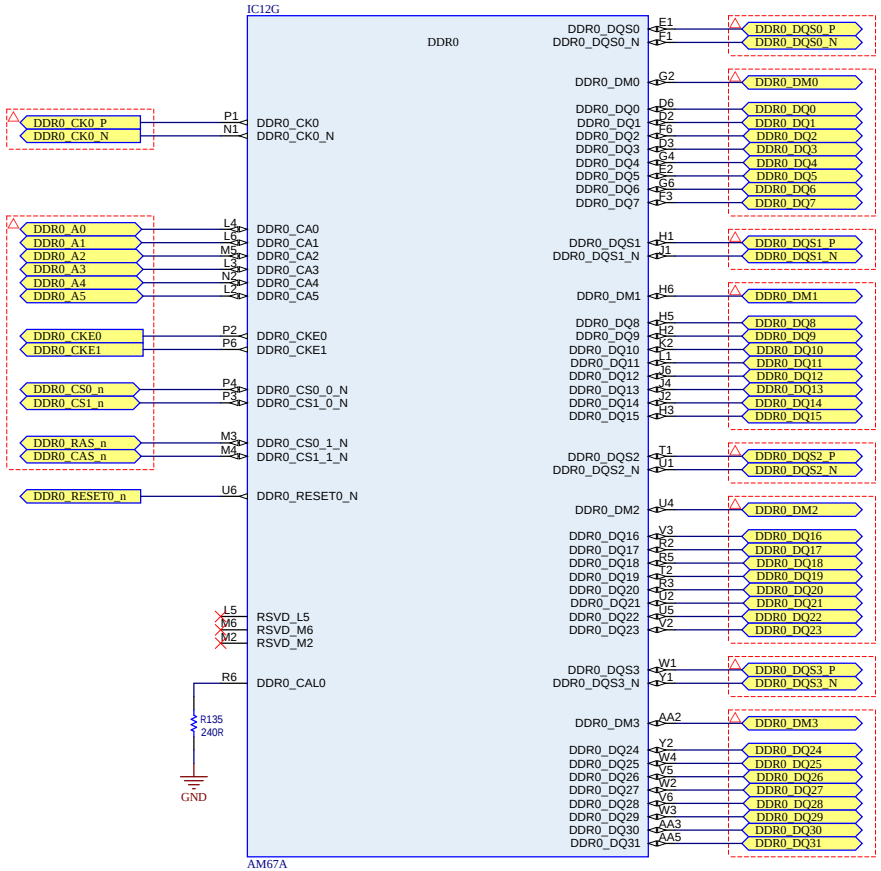

Main Domain - DDR

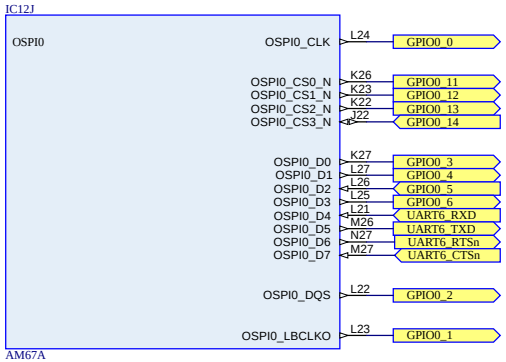

Main Domain - OSPI

Proje / Project:	T3_Gemstone
Sayfa Adı / Page Name:	SOC_DDR - OSPI.SchDoc
Revizyon / Revision:	V0.2
Sayfa / Page:	16 / 33
Firma / Organization:	T3 VAKFI
Tarih / Date	15.07.2025

T3 Gemstone

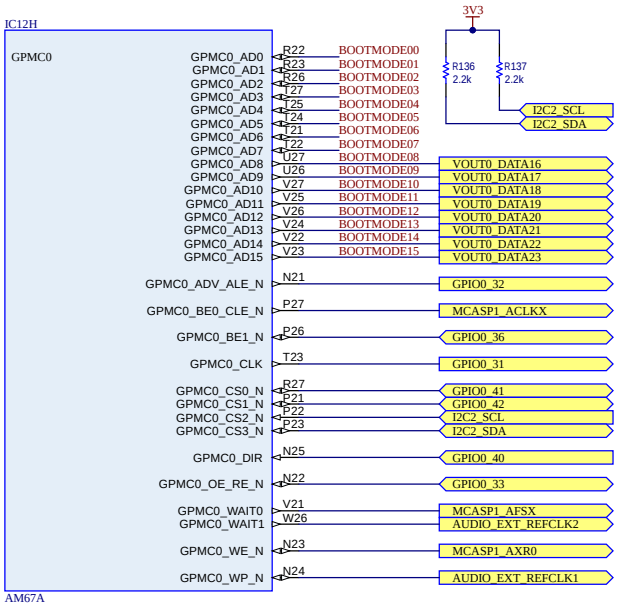

Main Domain - GPMC

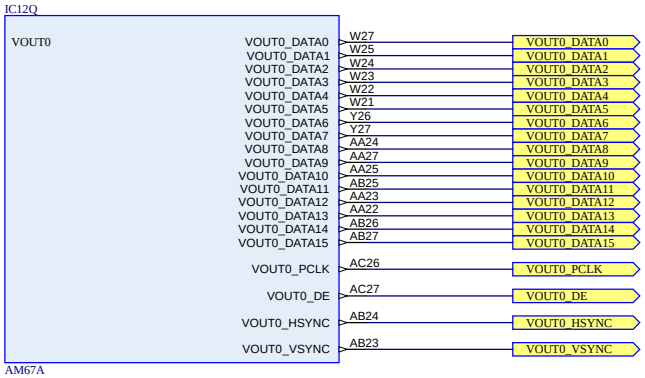

Main Domain - VOUT

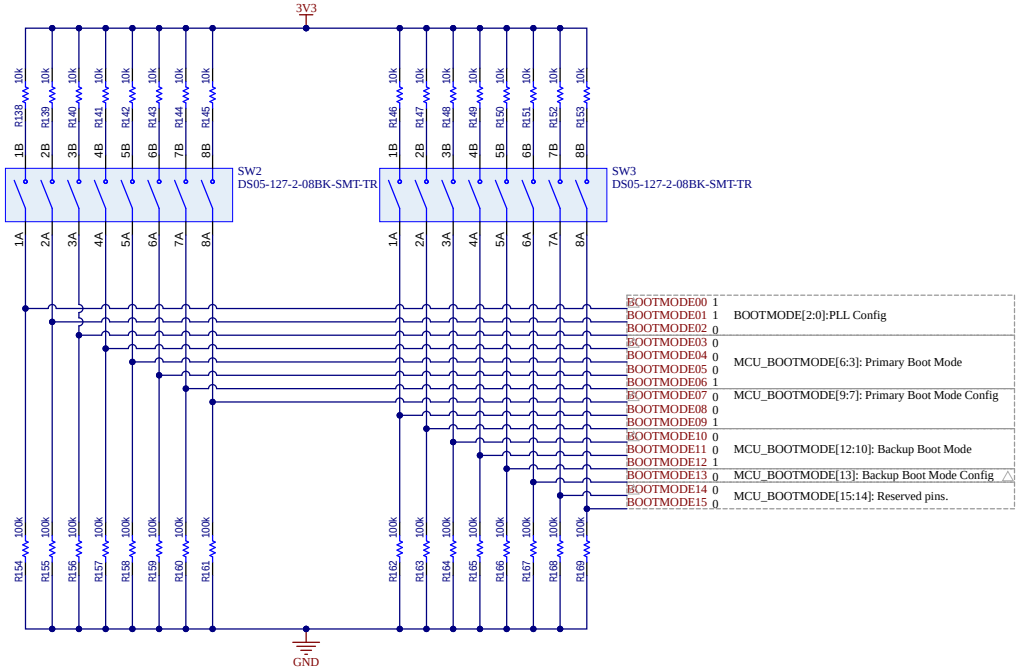

Table 5-2. BOOTMODE Pin Mapping

15	14	13	12	11	10	9	8	7	6	5	4	3	2	1	0
Reserved	Reserved	Backup Boot Mode Config	Backup Boot Mode			Primary Boot Mode Config			Primary Boot Mode				PLL Config		

Table 5-4. Primary Boot Mode Selection

Primary Boot Mode Config							Primary Boot Mode
B9	B8	B7	B6	B5	B4	B3	
Reserved	Read Mode 2	Read Mode 1	0	0	0	0	Serial NAND
Reserved	Reserved	Csel	0	0	0	1	OSPI
Reserved	Reserved	Csel	0	0	1	0	QSPI
Reserved	Mode	Csel	0	0	1	1	SPI

Table 5-4. Primary Boot Mode Selection (continued)

Primary Boot Mode Config							Primary Boot Mode
B9	B8	B7	B6	B5	B4	B3	
0	0	Link Info	0	1	0	0	Ethernet RGMII
Clkout	Clk src	0	0	1	0	1	Ethernet RMII
Bus reset	Reserved	Addr	0	1	1	0	I2C
Reserved	Reserved	Reserved	0	1	1	1	UART
1	Reserved	Fs/raw	1	0	0	0	MMCSD Boot (SD Card Boot or eMMC Boot using UDA)
Reserved	Reserved	Reserved	1	0	0	1	eMMC Boot
0	Mode	Lane Swap	1	0	1	0	USB
Reserved	Reserved	Reserved	1	0	1	1	GPMC NAND
Reserved	Reserved	Reserved	1	1	0	0	GPMC NOR
Reserved	Reserved	Reserved	1	1	0	1	Fast-xSPI
SFPD	Read Cmd	Mode	1	1	1	0	xSPI
Reserved	ARM/Thumb	No/Dev	1	1	1	1	No-boot/Dev boot

Table 5-5. Backup Mode Selection

Backup Boot Config	Backup Boot Mode Selection			Backup Boot Mode Selected
B13	B12	B11	B10	
Reserved	0	0	0	None
Mode	0	0	1	USB
Reserved	0	1	0	Reserved
Reserved	0	1	1	UART
IF	1	0	0	Ethernet
Port	1	0	1	MMCSD Boot (SD Card Boot or eMMC Boot)
Reserved	1	1	0	SPI
Reserved	1	1	1	I2C

BOOT MODE

T3 Gemstone

Proje / Project:	T3_Gemstone
Sayfa Adı / Page Name:	SOC_GPMC - VOUT.SchDoc
Revizyon / Revision:	V0.2
Sayfa / Page:	17 / 33
Firma / Organization:	T3 VAKFI
Tarih / Date	15.07.2025

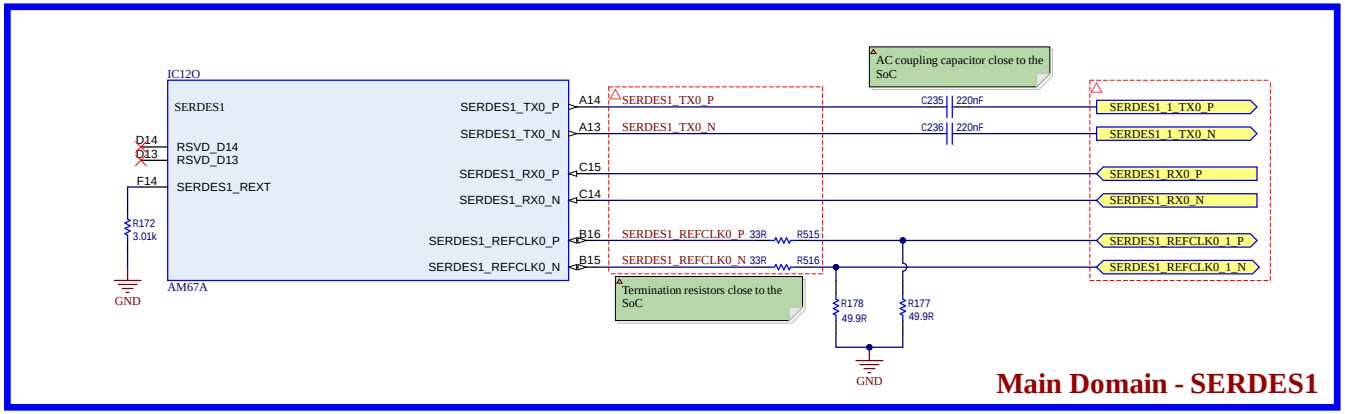

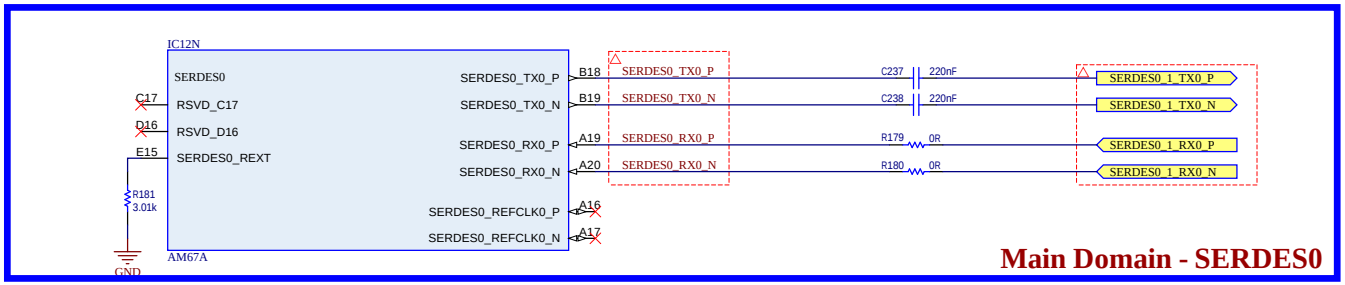

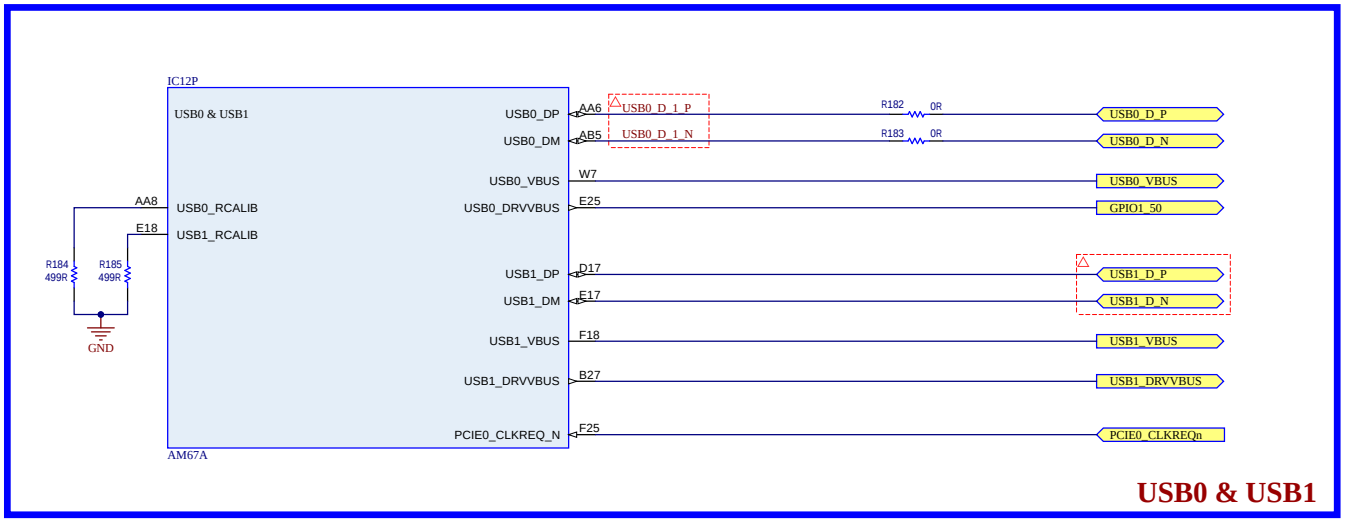

T3 Gemstone

Proje / Project:	T3_Gemstone
Sayfa Adı / Page Name:	SOC_SERDES - USB.SchDoc
Revizyon / Revision:	V0.2
Sayfa / Page:	18 / 33
Firma / Organization:	T3 VAKFI
Tarih / Date	15.07.2025

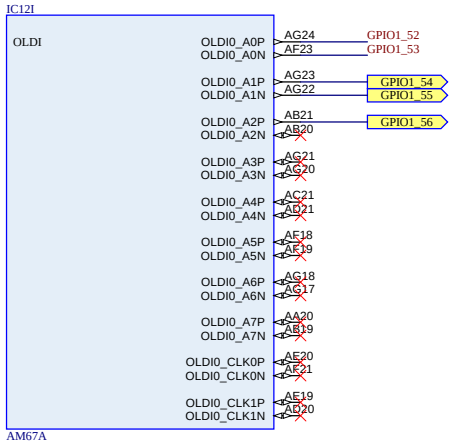

Main Domain - OLDI

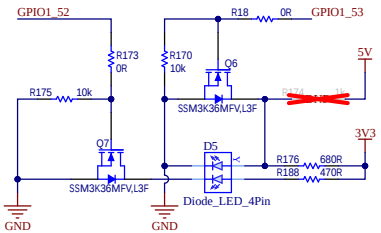

LED

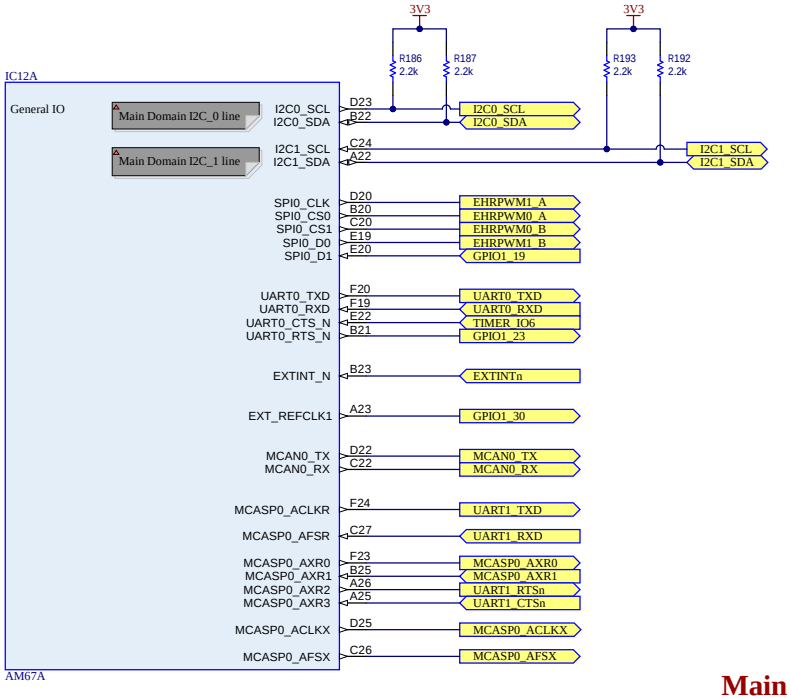

Main Domain GPIO

T3 Gemstone

Proje / Project:	T3_Gemstone
Sayfa Adı / Page Name:	SOC_OLDI - Main_Domain_GPIO.SchDoc
Revizyon / Revision:	V0.2
Sayfa / Page:	19 / 33
Firma / Organization:	T3 VAKFI
Tarih / Date	15.07.2025

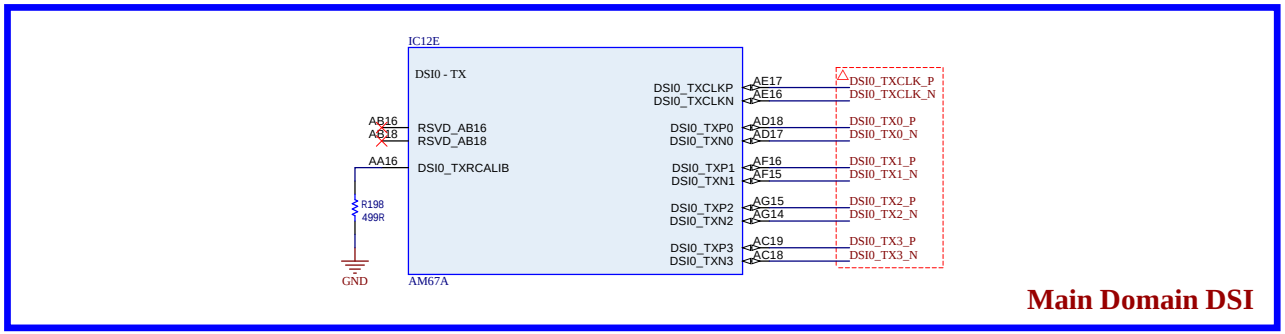

Main Domain DSI

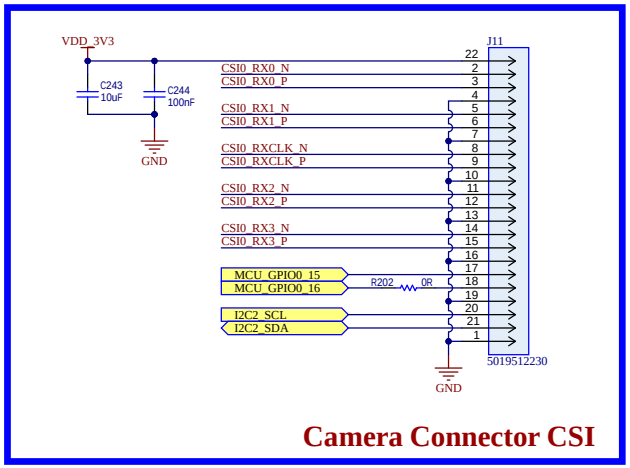

Camera Connector CSI

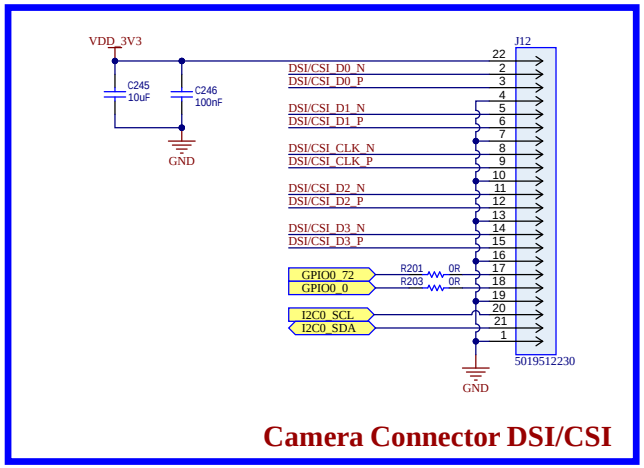

Camera Connector DSI/CSI

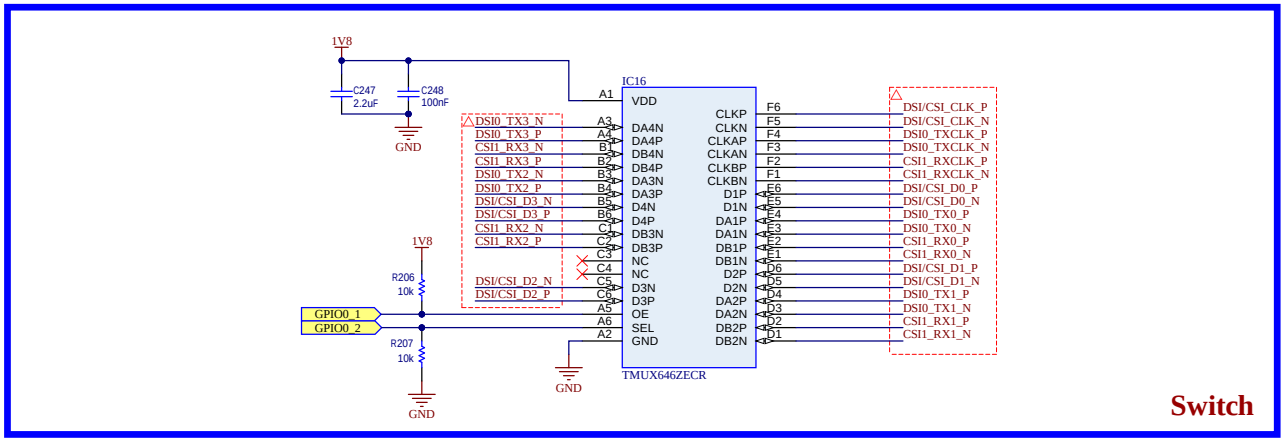

Switch

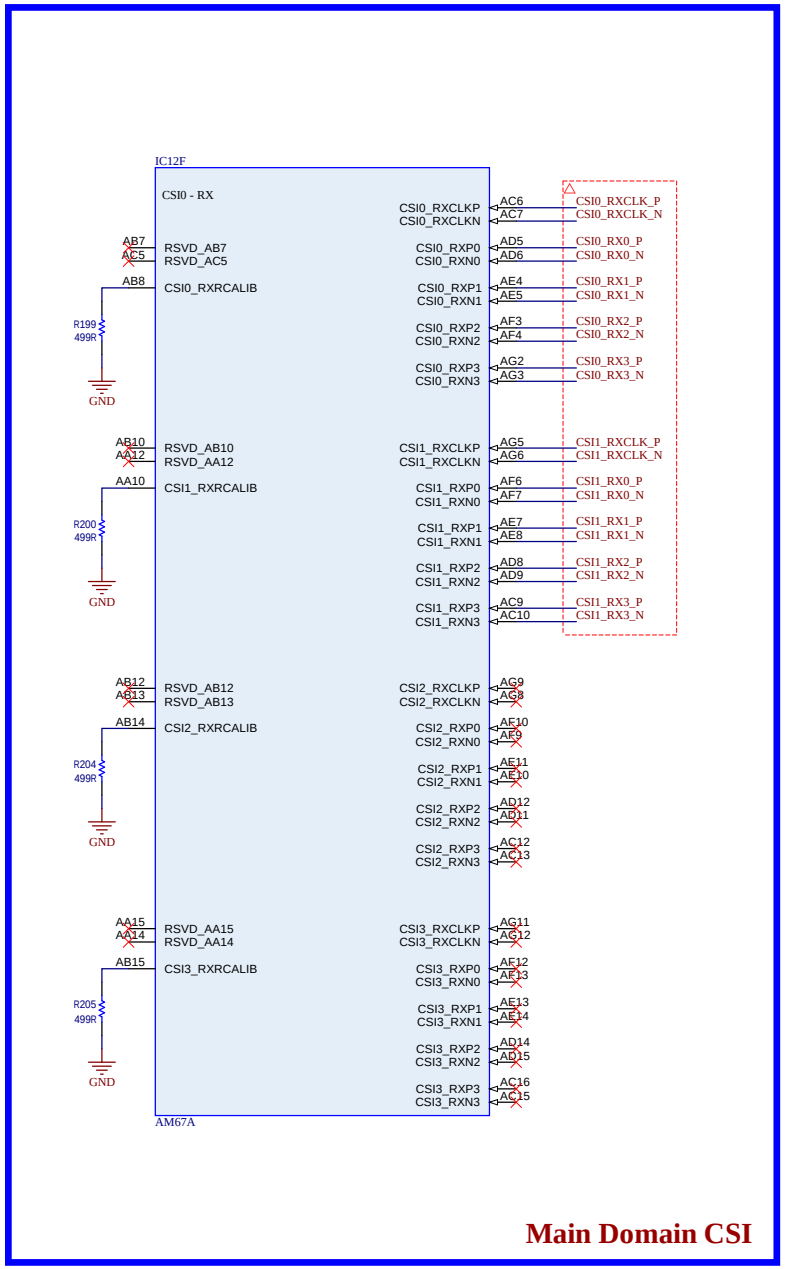

Main Domain CSI

Proje / Project:	T3_Gemstone
Sayfa Adı / Page Name:	SOC_DSI - CSI.SchDoc
Revizyon / Revision:	V0.2
Sayfa / Page:	20 / 33
Firma / Organization:	T3 VAKFI
Tarih / Date	15.07.2025

T3 Gemstone

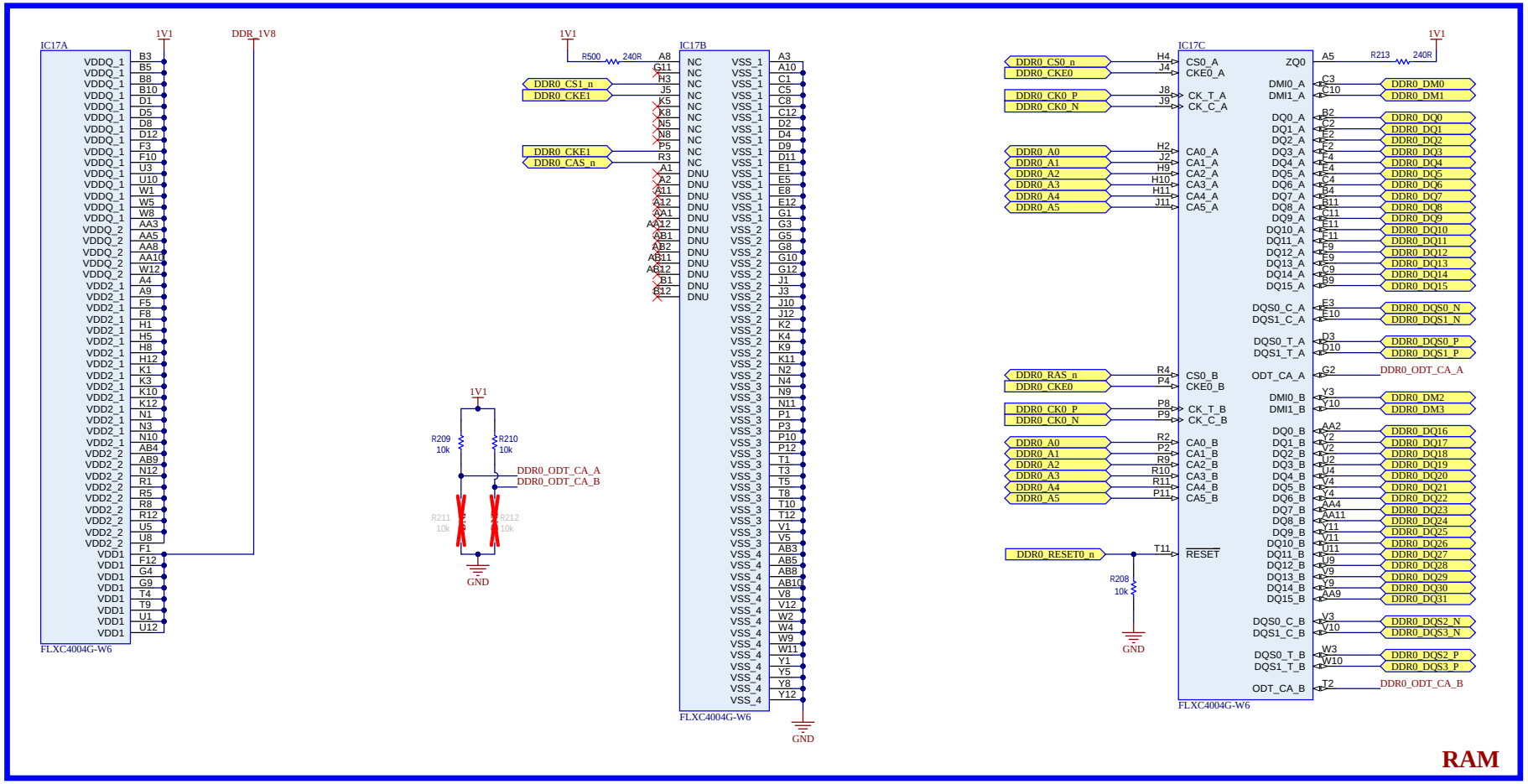

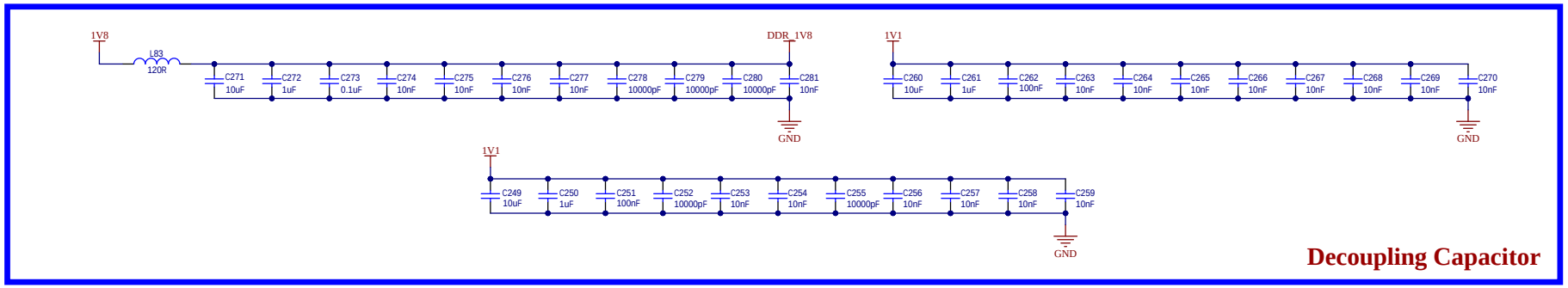

Proje / Project:	T3_Gemstone
Sayfa Adı / Page Name:	RAM.SchDoc
Revizyon / Revision:	V0.2
Sayfa / Page:	21 / 33
Firma / Organization:	T3 VAKFI
Tarih / Date	15.07.2025

T3 Gemstone

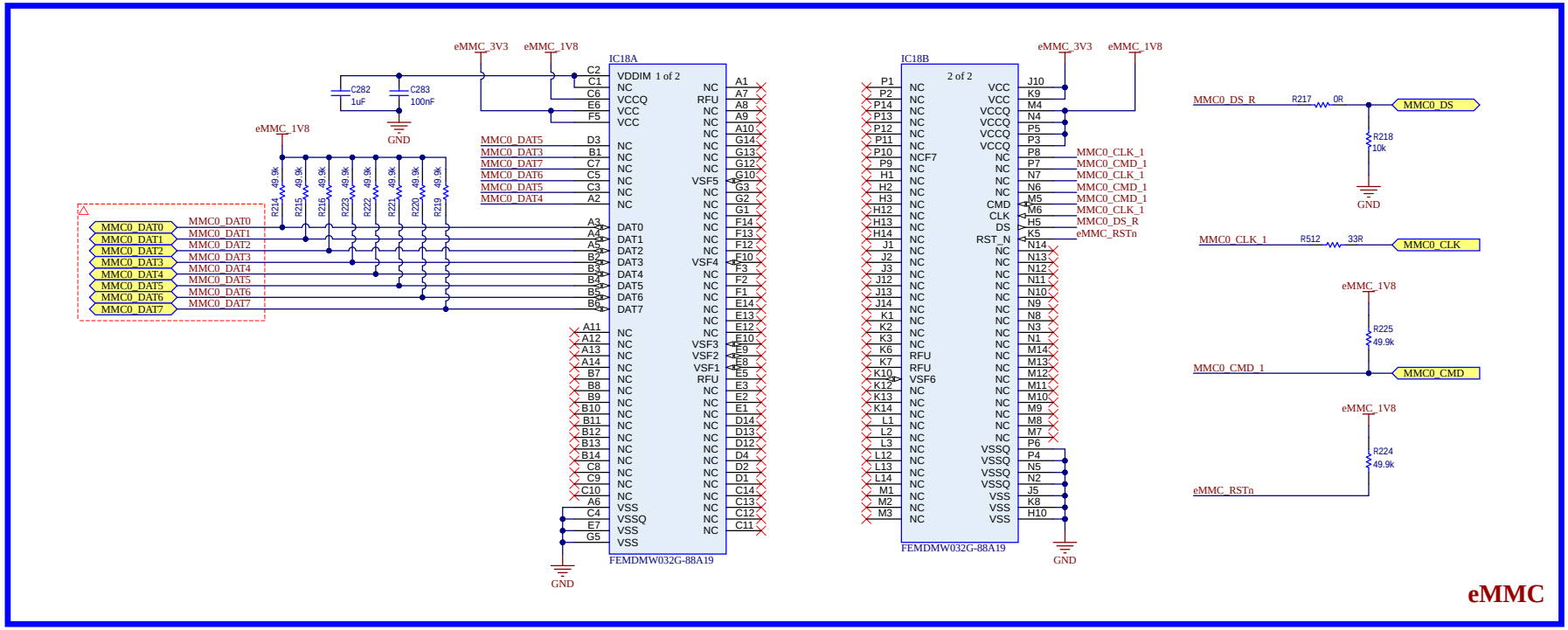

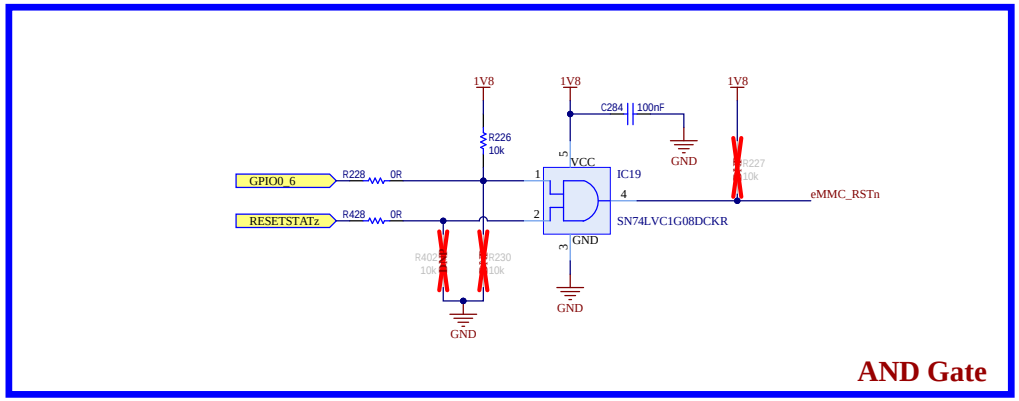

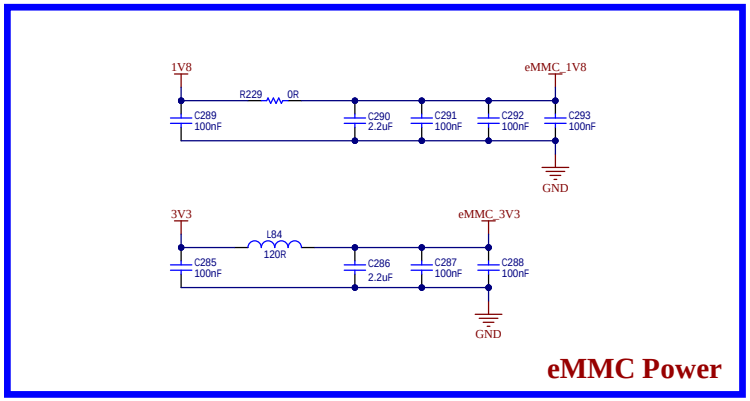

Proje / Project:	T3_Gemstone
Sayfa Adı / Page Name:	eMMC.SchDoc
Revizyon / Revision:	V0.2
Sayfa / Page:	22 / 33
Firma / Organization:	T3 VAKFI
Tarih / Date	15.07.2025

T3 Gemstone

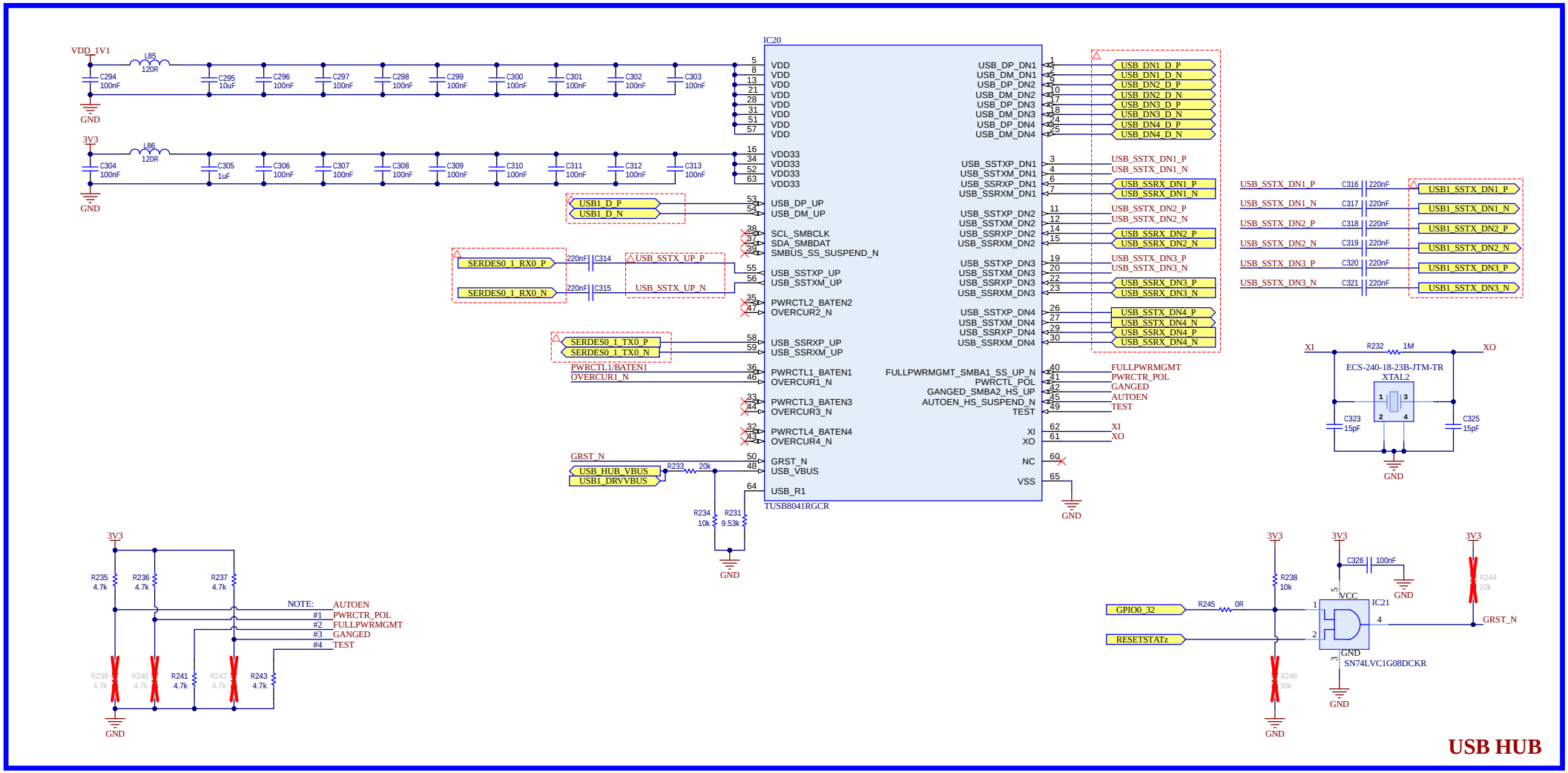

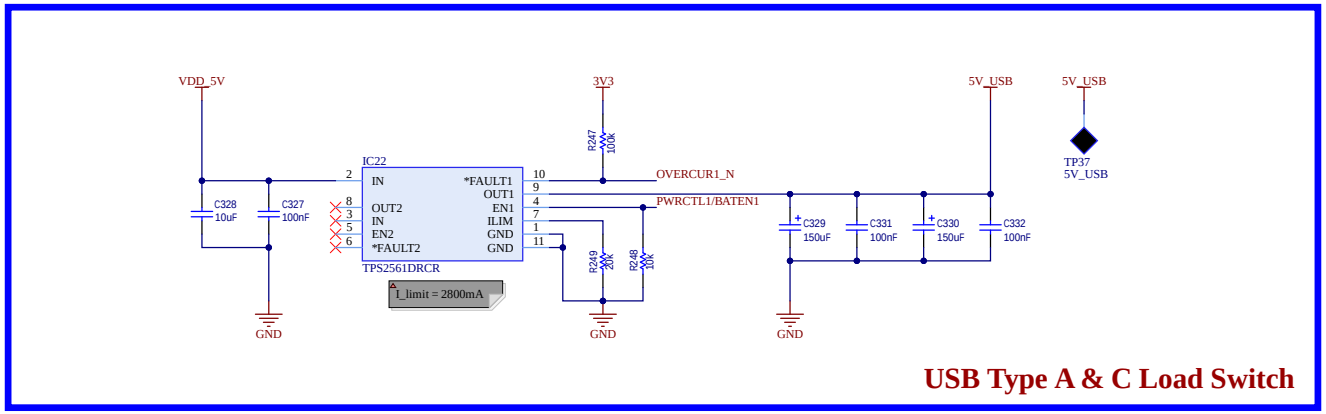

Proje / Project:	T3_Gemstone
Sayfa Adı / Page Name:	USB_Hub.SchDoc
Revizyon / Revision:	V0.2
Sayfa / Page:	23 / 33
Firma / Organization:	T3 VAKFI
Tarih / Date	15.07.2025

T3 Gemstone

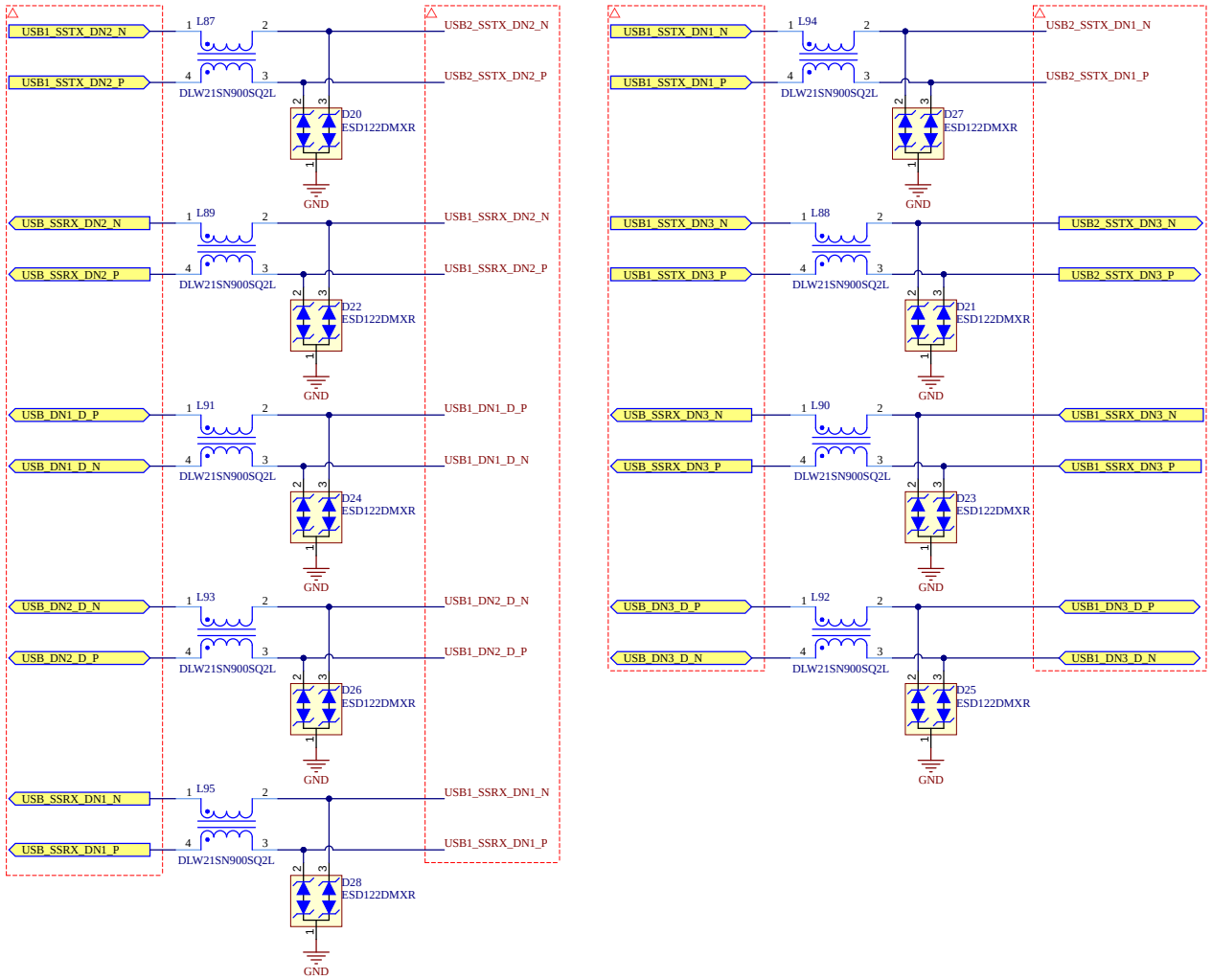

USB Data Filter

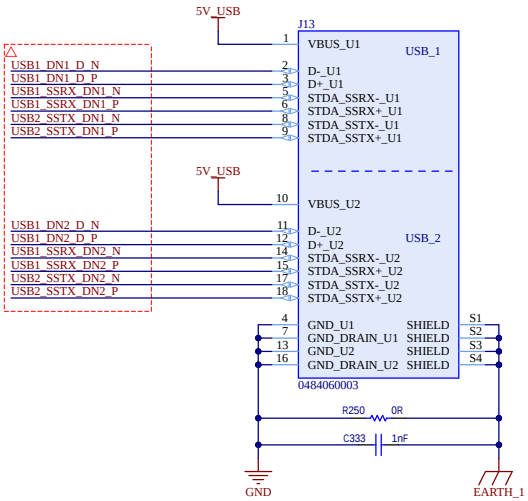

USB TYPE A Connector

Proje / Project:	T3_Gemstone
Sayfa Adı / Page Name:	USB_Connector.SchDoc
Revizyon / Revision:	V0.2
Sayfa / Page:	24 / 33
Firma / Organization:	T3 VAKFI
Tarih / Date	15.07.2025

T3 Gemstone

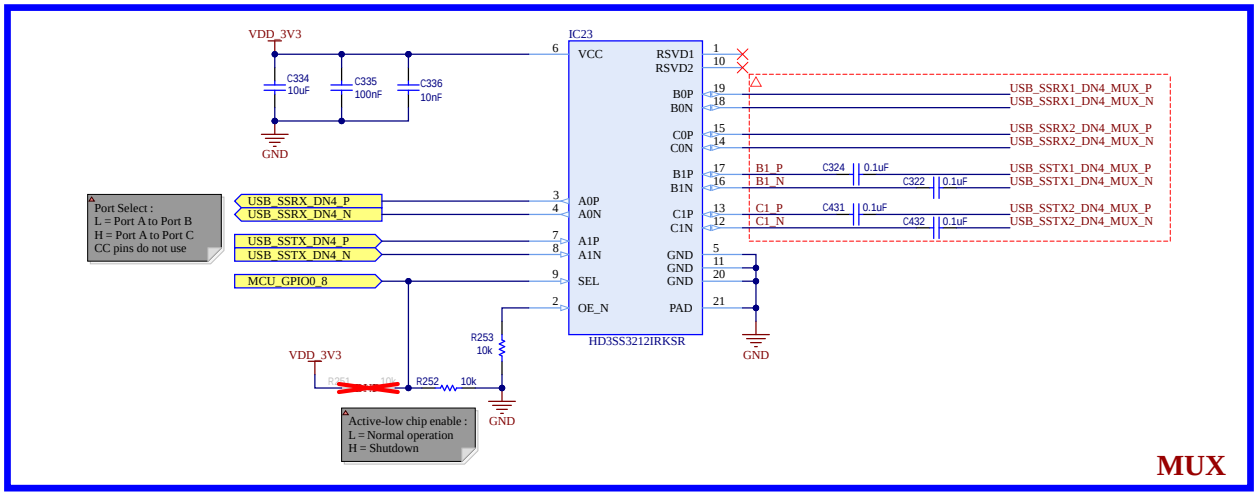

MUX

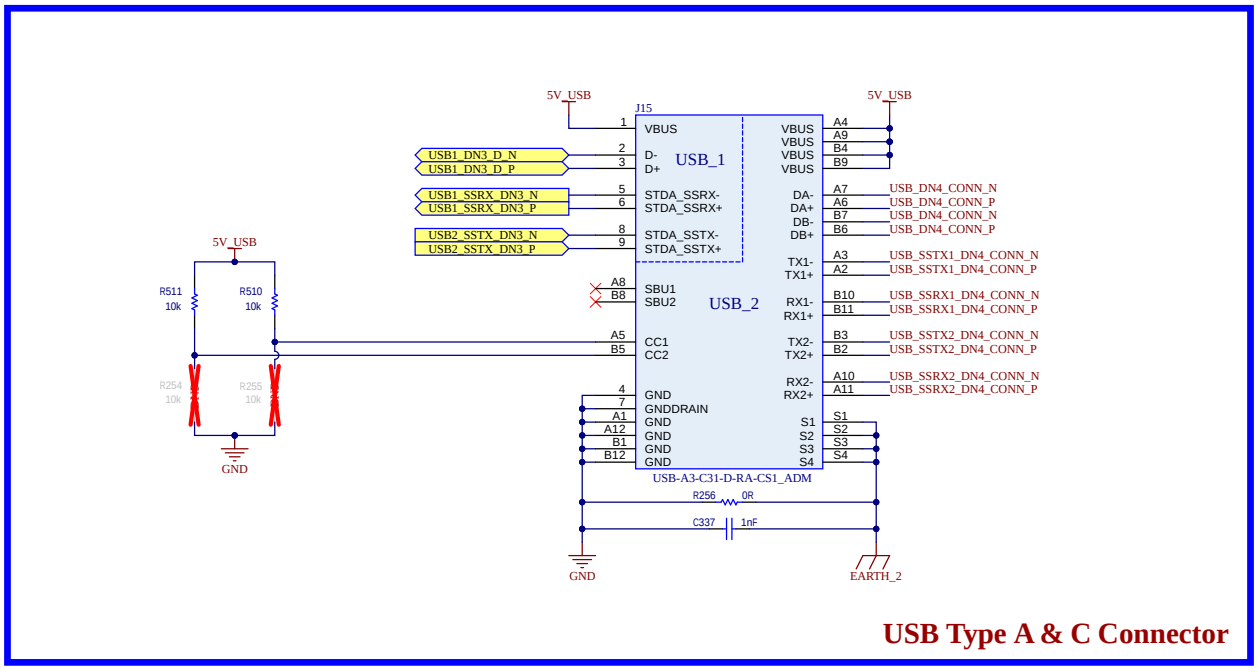

USB Type A & C Connector

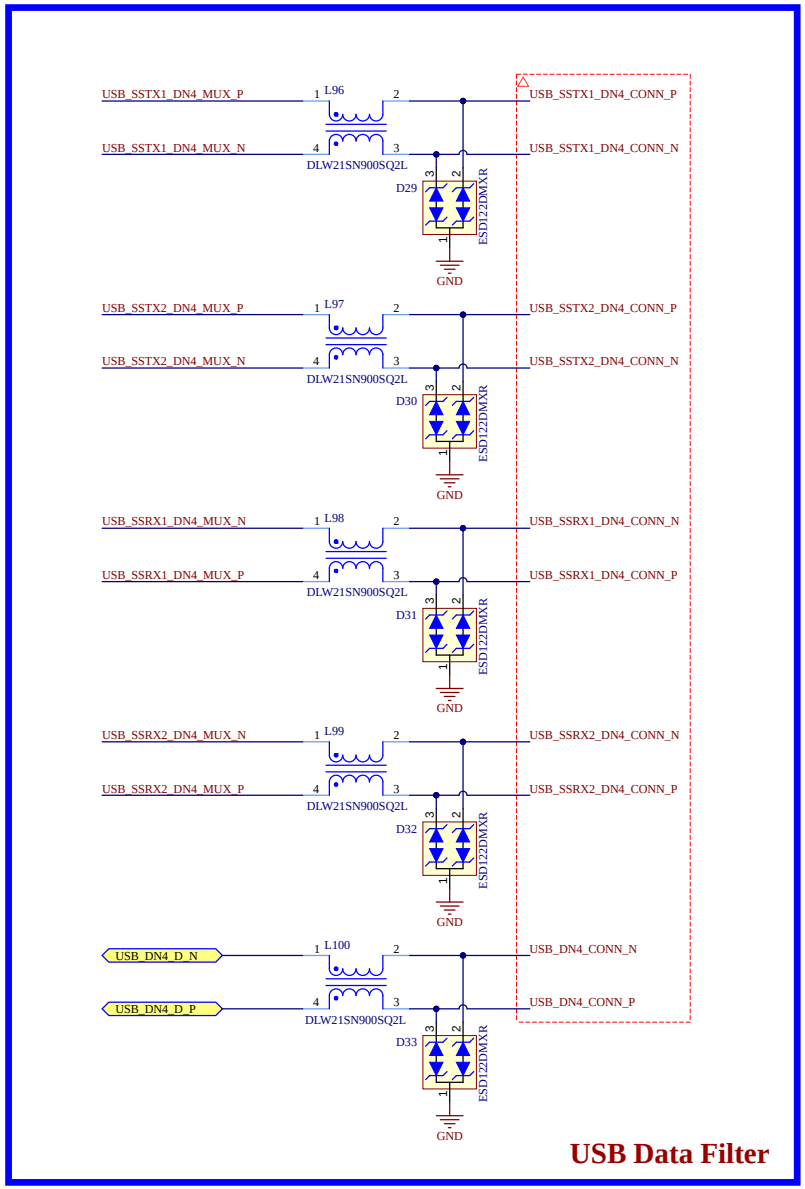

USB Data Filter

Proje / Project:	T3_Gemstone
Sayfa Adı / Page Name:	USB_Connector_1.SchDoc
Revizyon / Revision:	V0.2
Sayfa / Page:	25 / 33
Firma / Organization:	T3 VAKFI
Tarih / Date	15.07.2025

T3 Gemstone

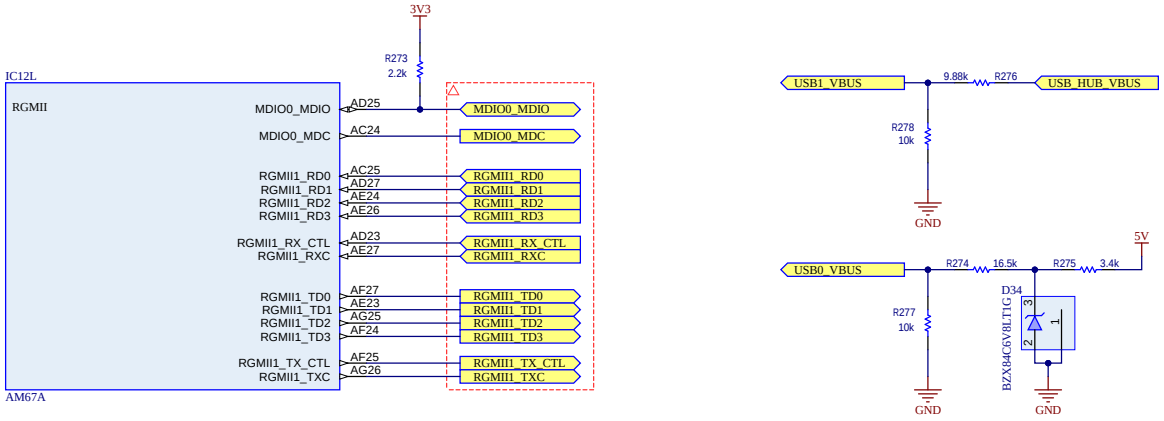

Main Domain RGMII

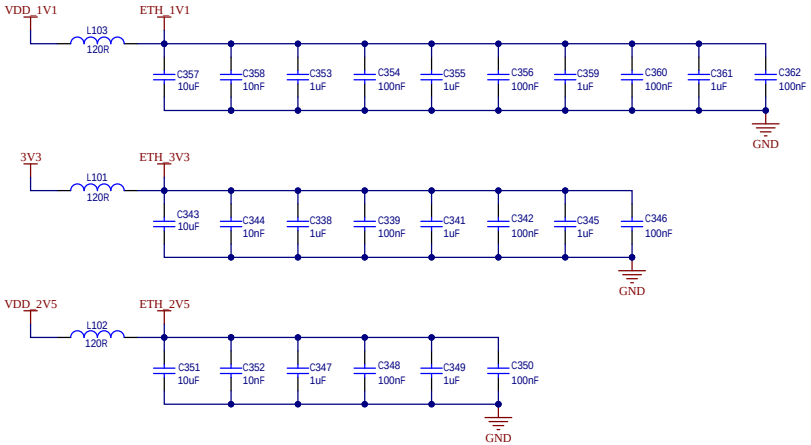

Ethernet Decoupling Capacitors

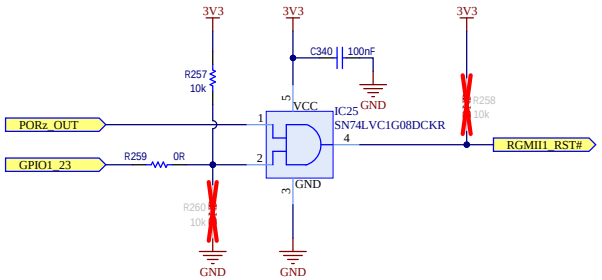

Ethernet AND Gate

Proje / Project:	T3_Gemstone
Sayfa Adı / Page Name:	SOC_RGMI - Ethernet_1.SchDoc
Revizyon / Revision:	V0.2
Sayfa / Page:	26 / 33
Firma / Organization:	T3 VAKFI
Tarih / Date	15.07.2025

T3 Gemstone

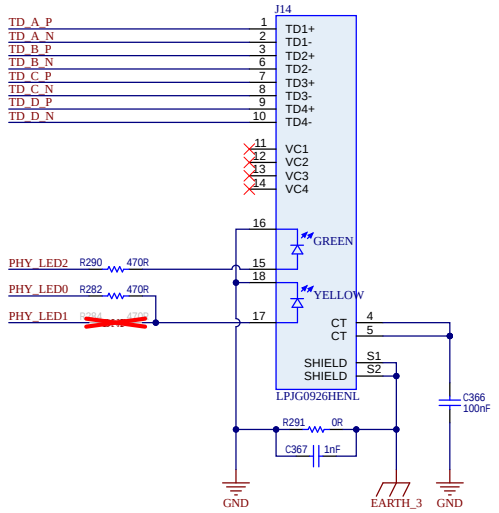

RJ45 Connector

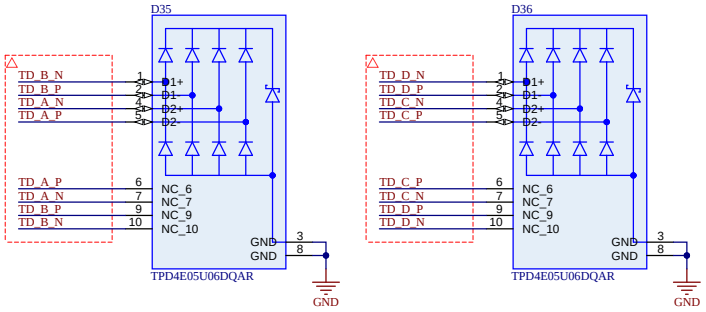

Data Protection

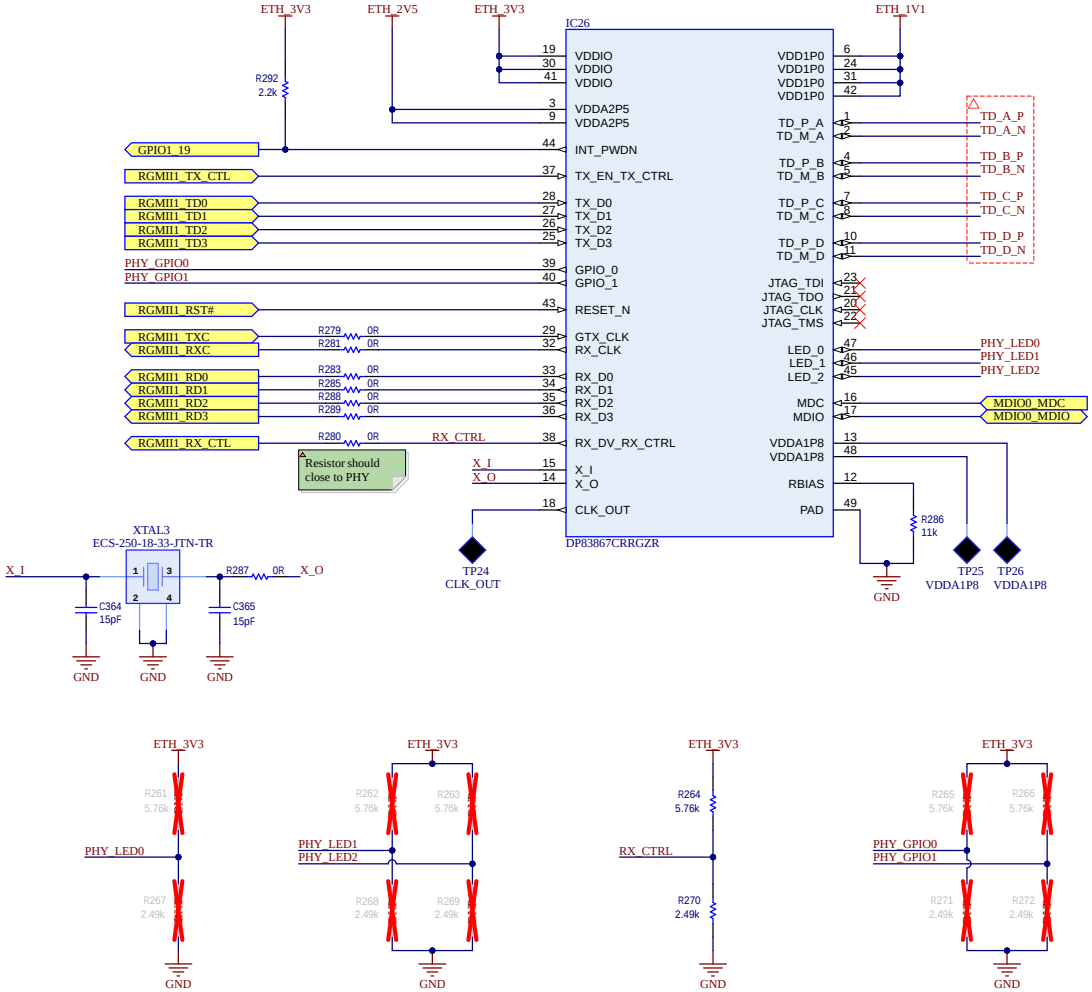

Ethernet PHY

Proje / Project:	T3_Gemstone
Sayfa Adı / Page Name:	Ethernet_2.SchDoc
Revizyon / Revision:	V0.2
Sayfa / Page:	27 / 33
Firma / Organization:	T3 VAKFI
Tarih / Date	15.07.2025

T3 Gemstone

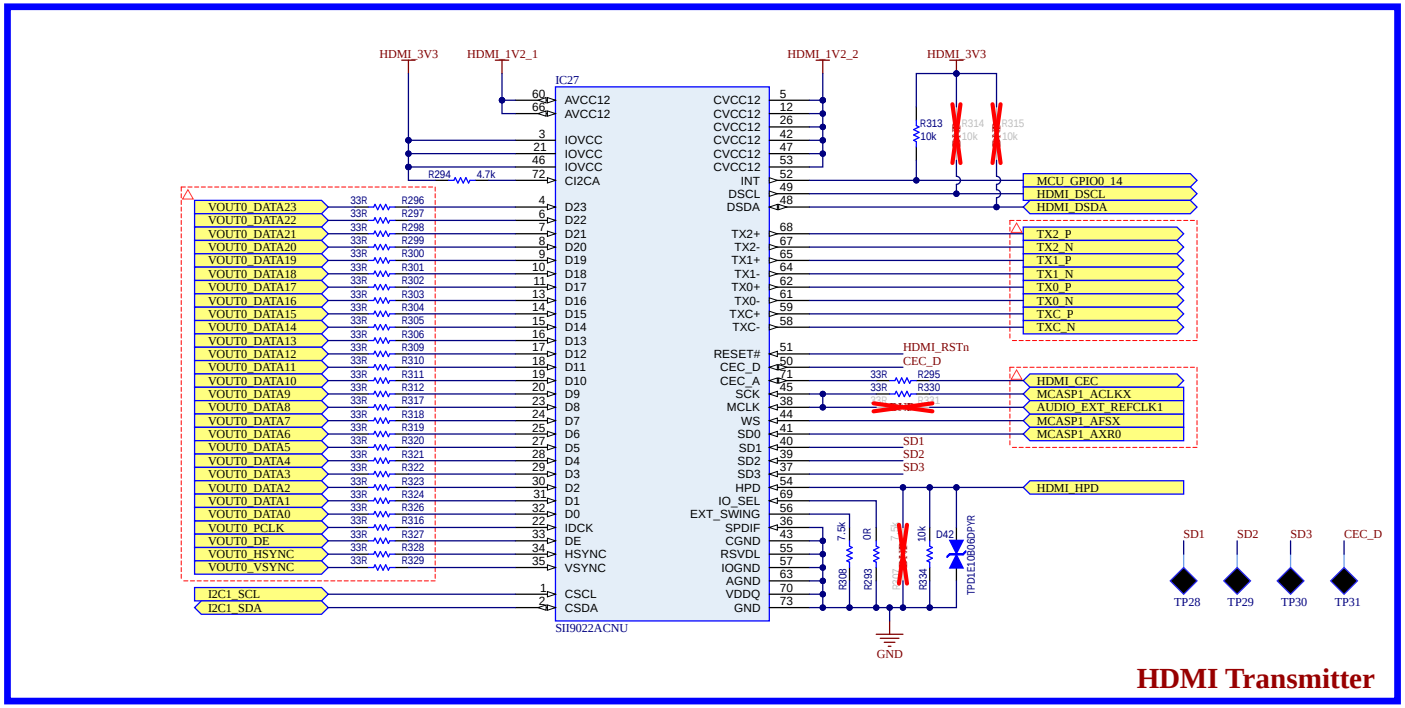

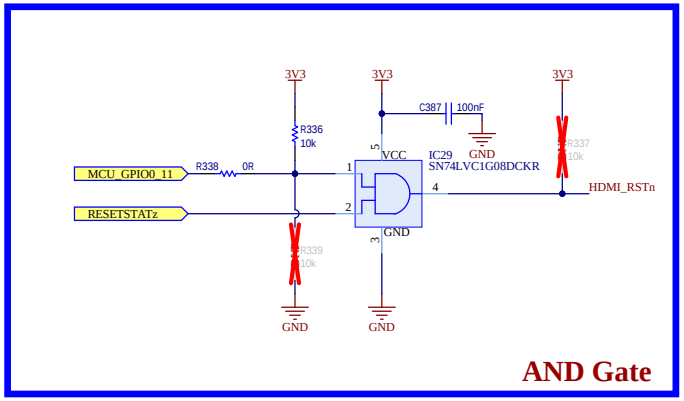

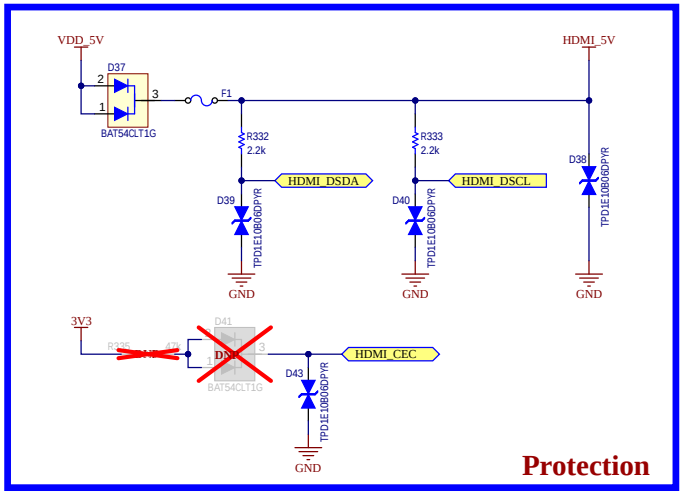

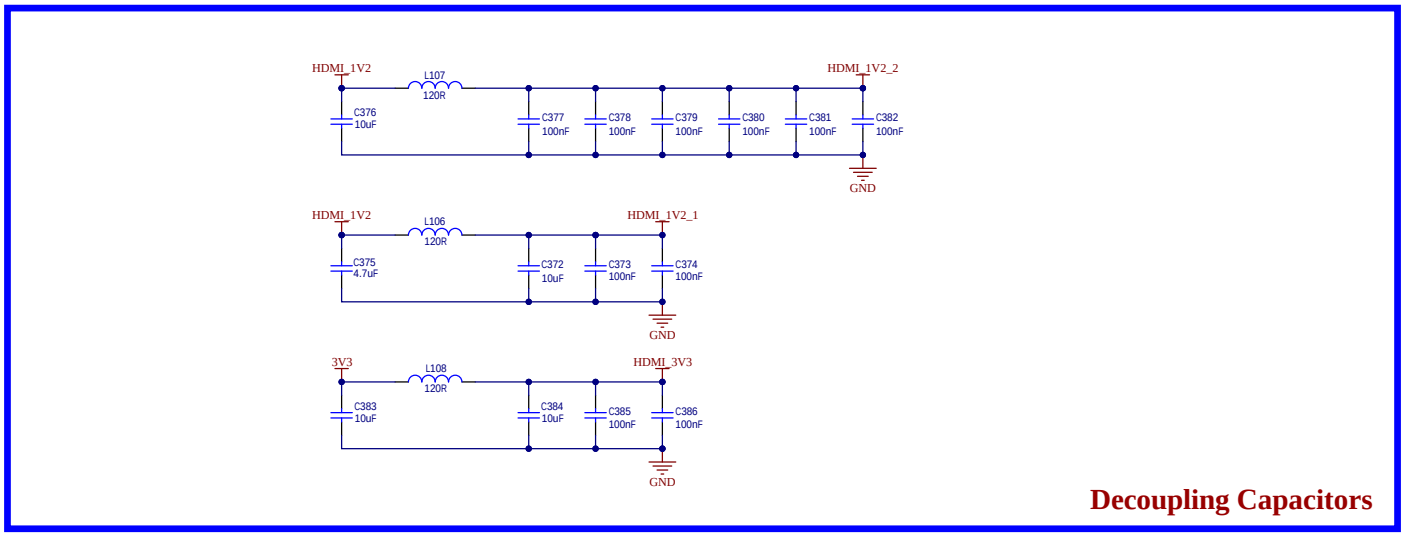

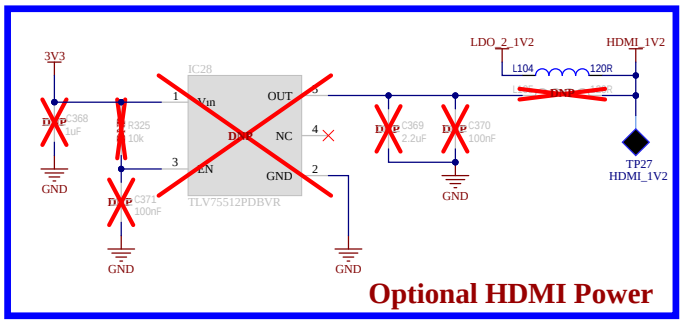

Proje / Project:	T3_Gemstone
Sayfa Adı / Page Name:	HDMI_Transmitter.SchDoc
Revizyon / Revision:	V0.2
Sayfa / Page:	28 / 33
Firma / Organization:	T3 VAKFI
Tarih / Date	15.07.2025

T3 Gemstone

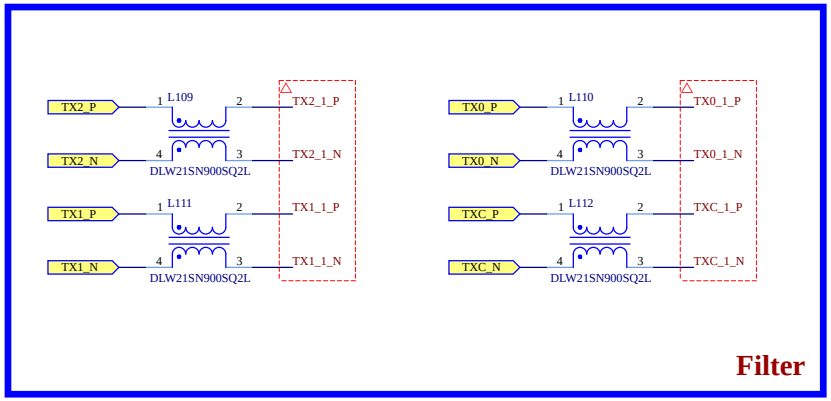

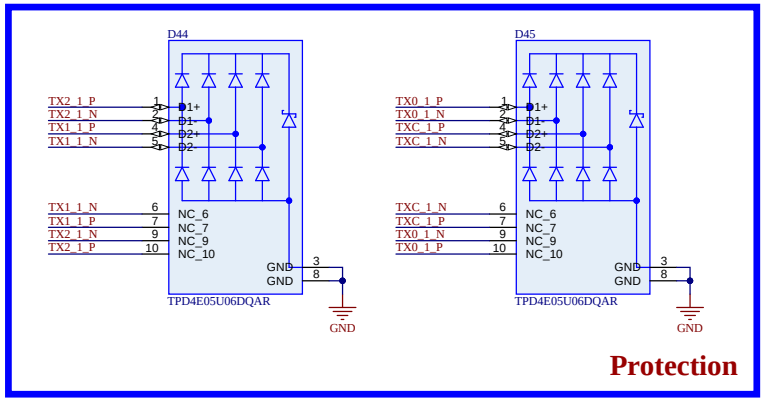

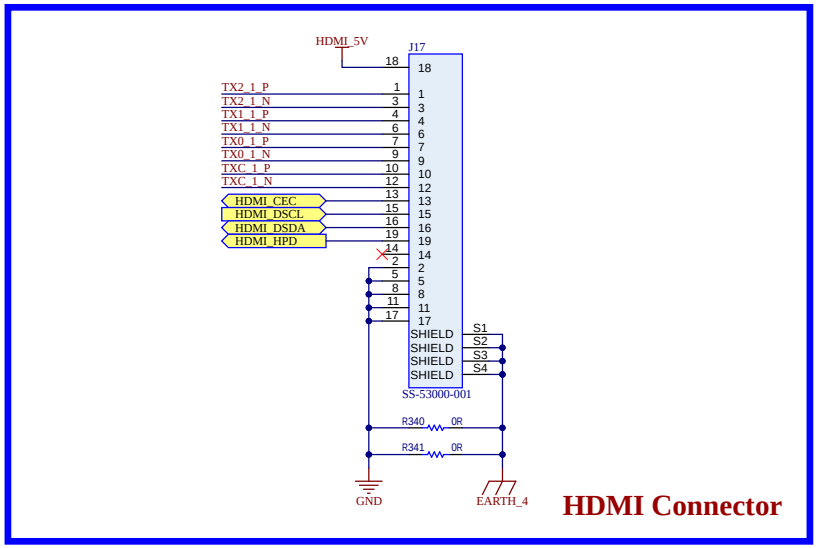

Proje / Project:	T3_Gemstone
Sayfa Adı / Page Name:	HDMI_Transmitter_1.SchDoc
Revizyon / Revision:	V0.2
Sayfa / Page:	29 / 33
Firma / Organization:	T3 VAKFI
Tarih / Date	15.07.2025

T3 Gemstone

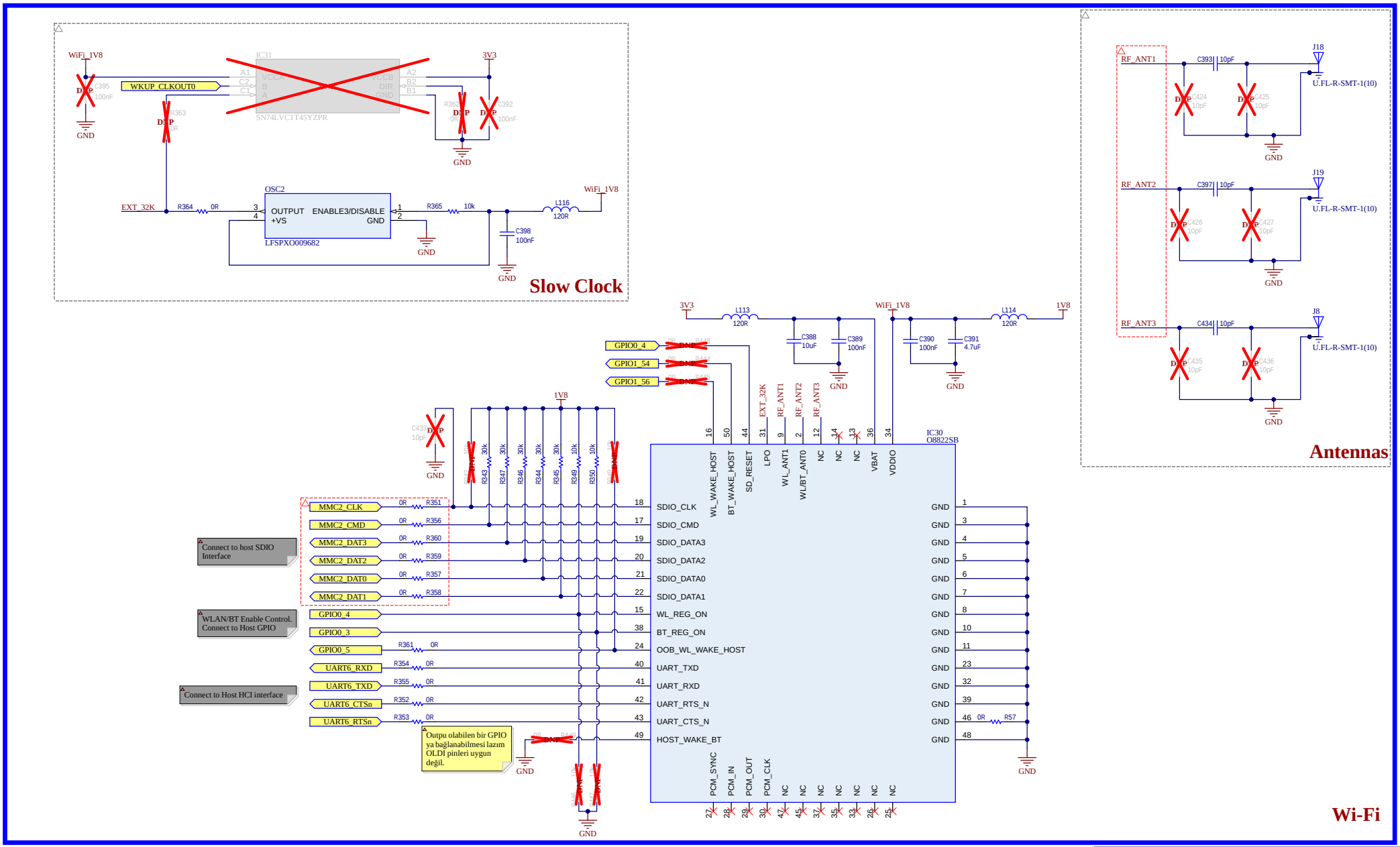

Proje / Project:	T3_Gemstone
Sayfa Adı / Page Name:	WiFi.SchDoc
Revizyon / Revision:	V0.2
Sayfa / Page:	30 / 33
Firma / Organization:	T3 VAKFI
Tarih / Date	15.07.2025

T3 Gemstone

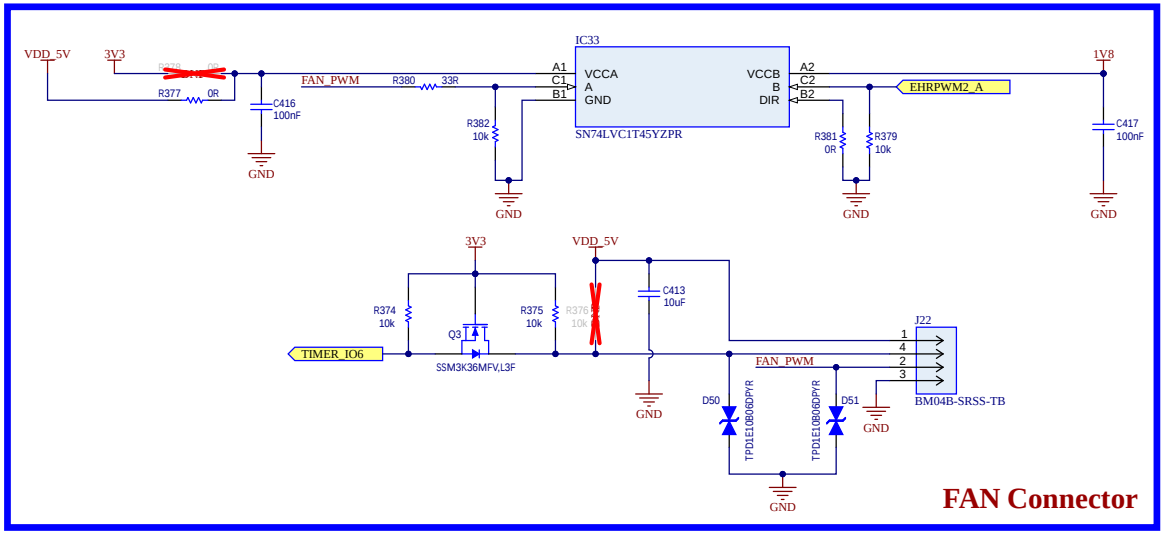

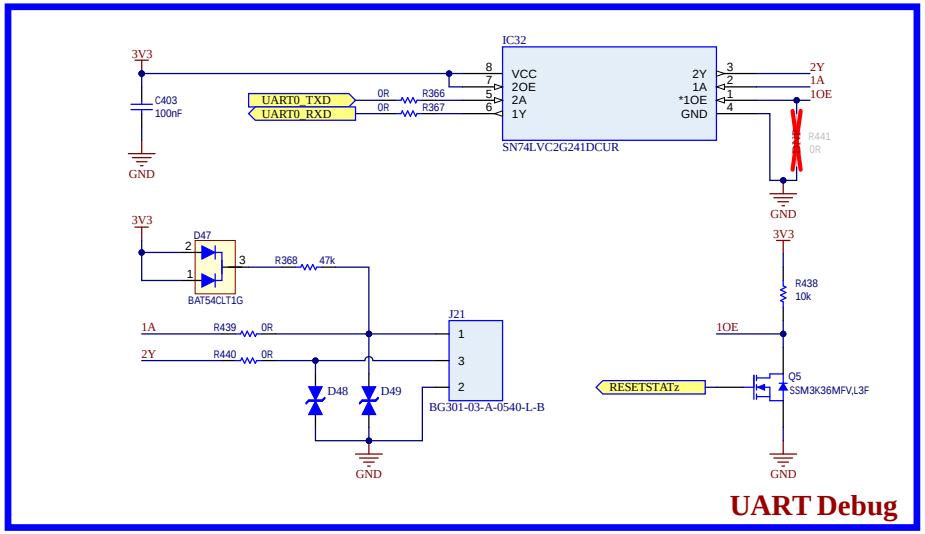

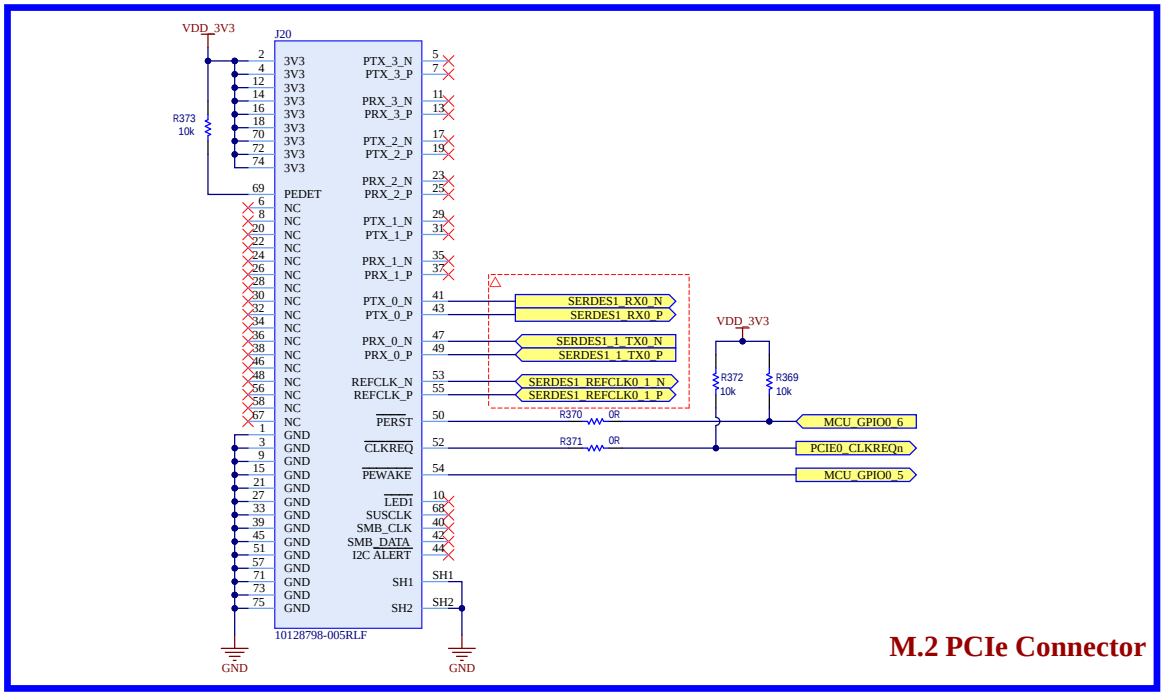

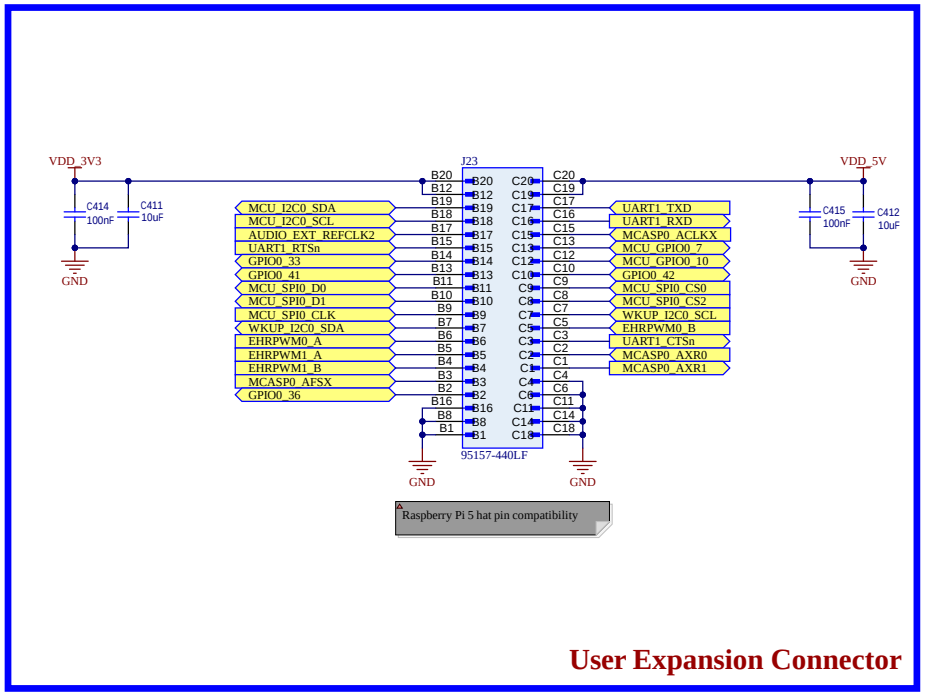

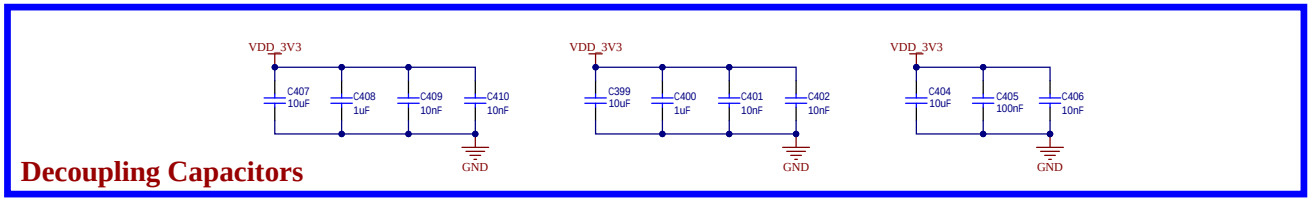

T3 Gemstone

Proje / Project:	T3_Gemstone
Sayfa Adı / Page Name:	Connectors.SchDoc
Revizyon / Revision:	V0.2
Sayfa / Page:	31 / 33
Firma / Organization:	T3 VAKFI
Tarih / Date	15.07.2025

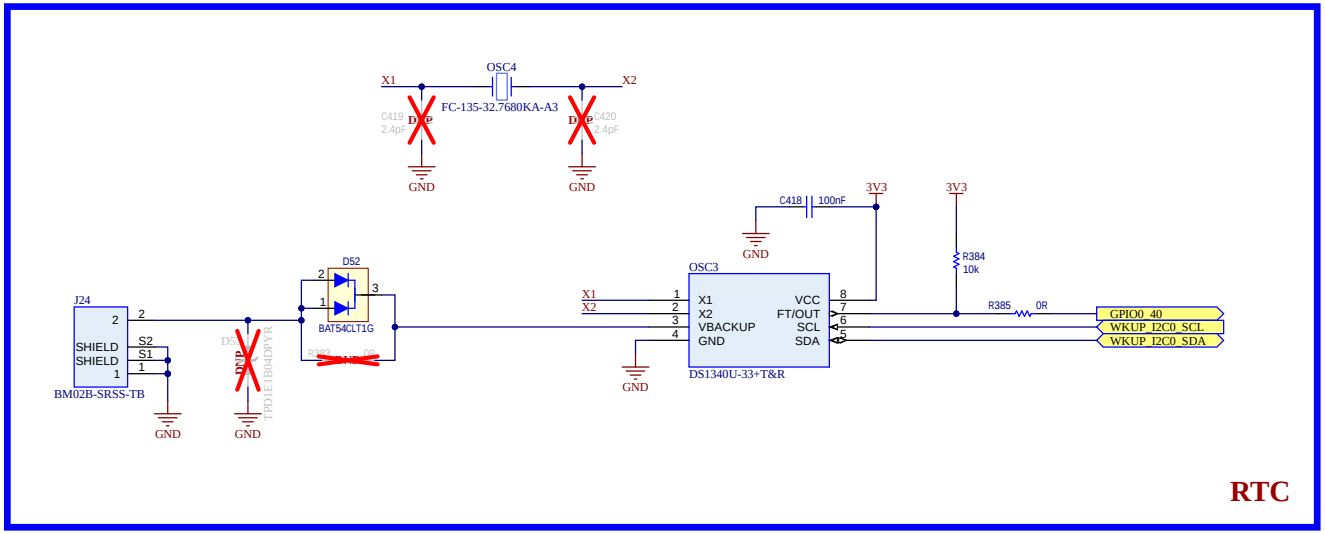

RTC

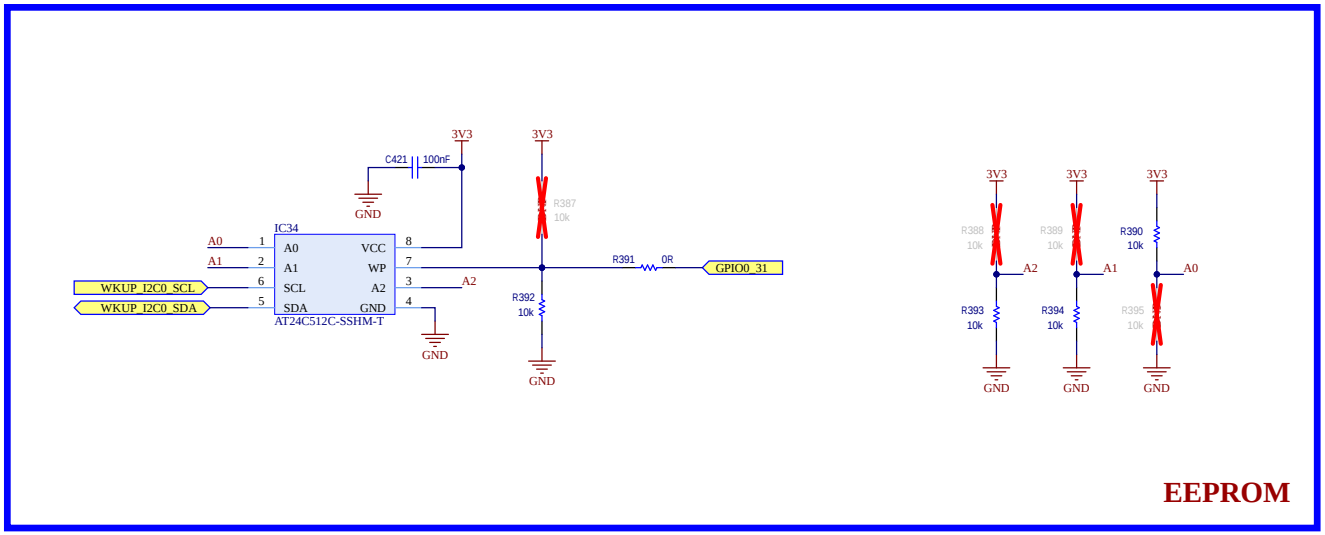

EEPROM

Proje / Project:	T3_Gemstone
Sayfa Adı / Page Name:	RTC - EEPROM.SchDoc
Revizyon / Revision:	V0.2
Sayfa / Page:	32 / 33
Firma / Organization:	T3 VAKFI
Tarih / Date	15.07.2025

T3 Gemstone

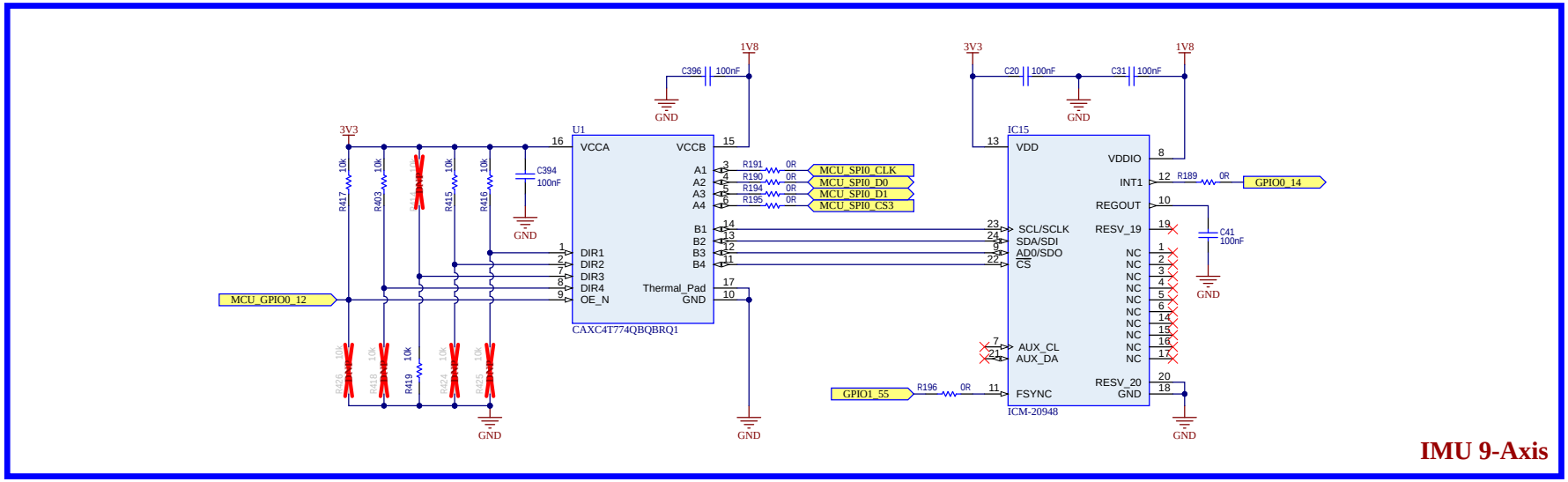

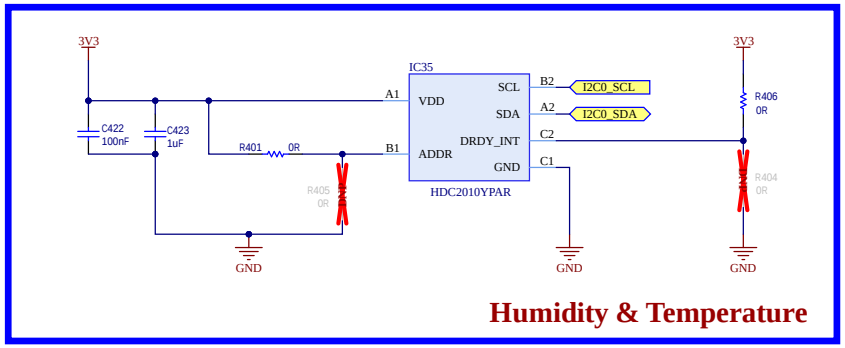

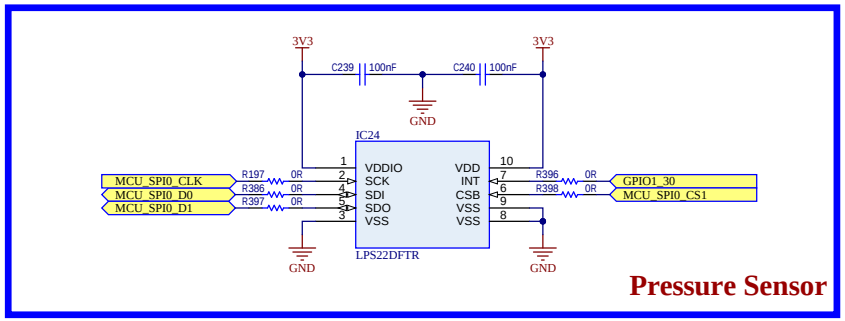

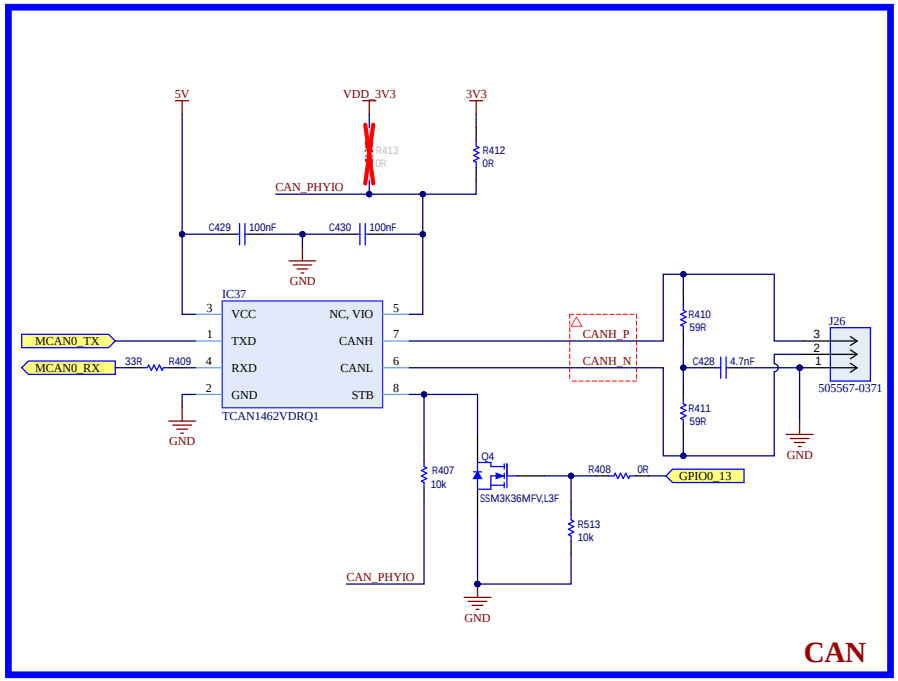

Proje / Project:	T3_Gemstone
Sayfa Adı / Page Name:	Sensors - CAN.SchDoc
Revizyon / Revision:	V0.2
Sayfa / Page:	33 / 33
Firma / Organization:	T3 VAKFI
Tarih / Date	15.07.2025

T3 Gemstone