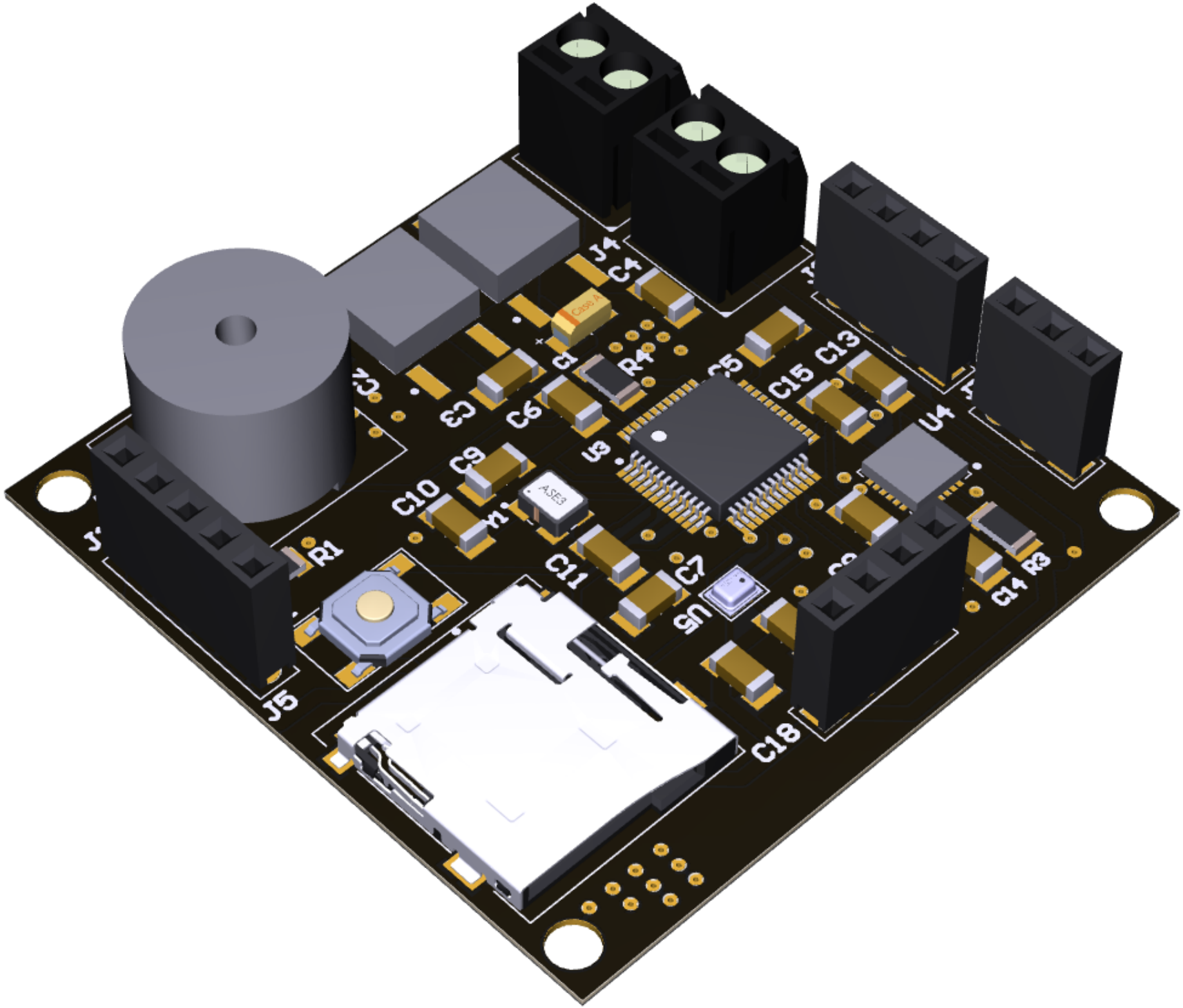
J4
C4
C1
R4
C5
C15
C13
C3
C6
U4
U3
C9
C10
ASE3
R1
C11
C7
U5
C14
R3
J5
C18

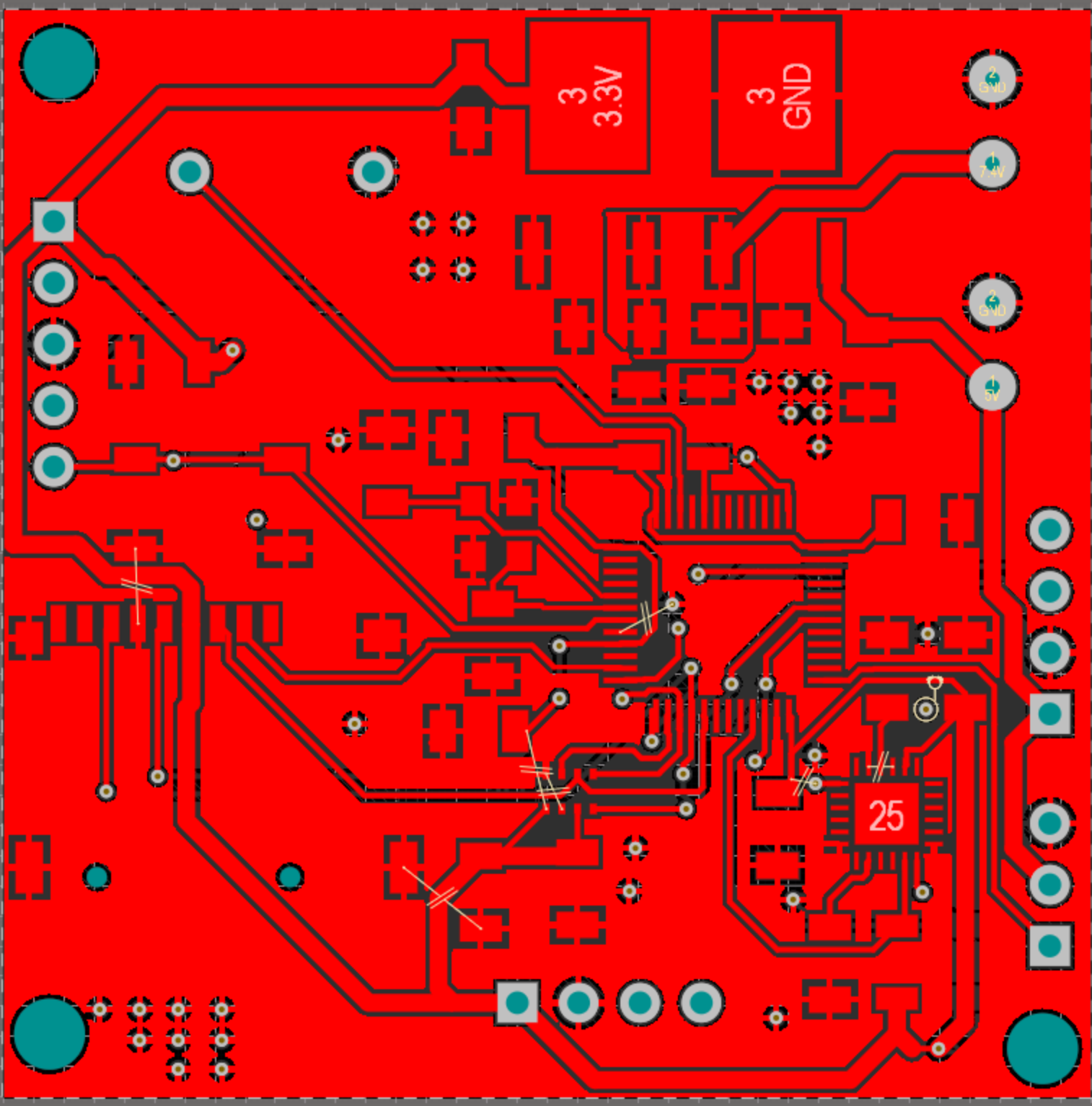
3
3.3V
3
GND
GND
7.4V
GND
5V
25

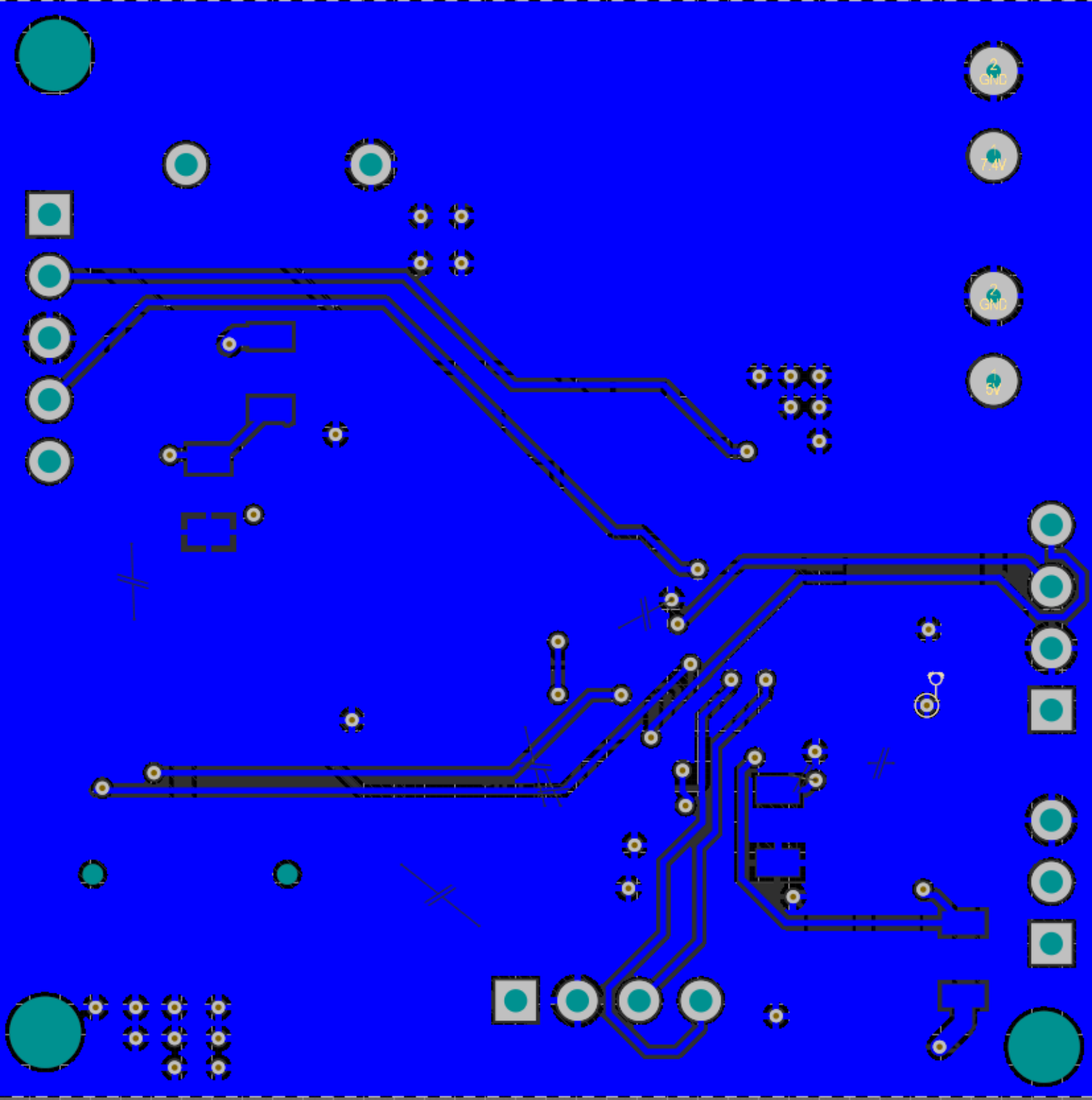
GND
7.4V
GND
5V

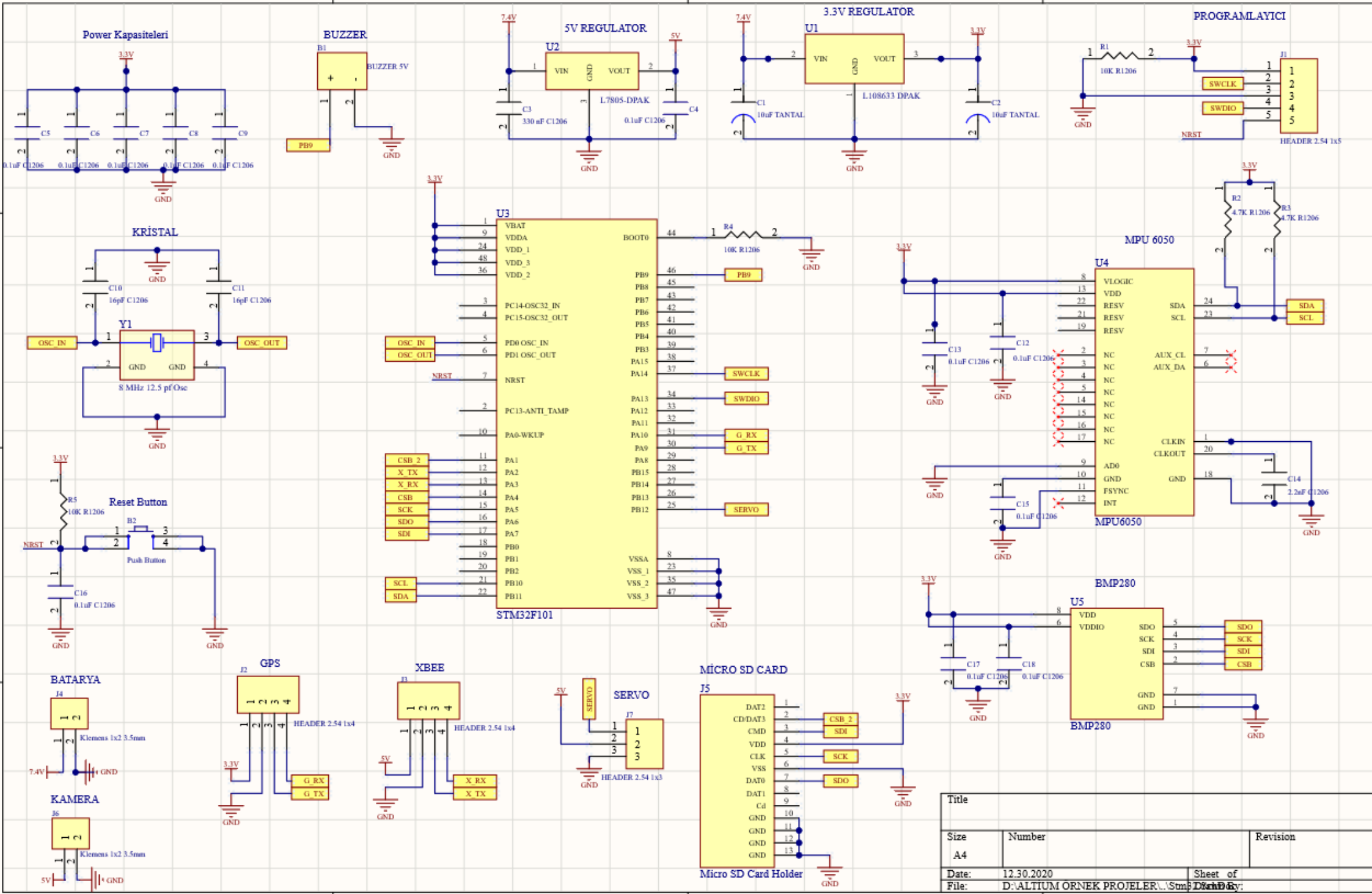
Power Kapasiteleri
BUZZER
5V REGULATOR
3.3V REGULATOR
PROGRAMLAYICI
KRİSTAL
STM32F101
MPU 6050
MPU6050
Reset Button
BMP280
BATARYA
GPS
XBEE
SERVO
MİCRO SD CARD
Micro SD Card Holder
KAMERA
Title
Size
A4
Number
Revision
Date:
12.30.2020
File:
D:\ALTIUM ORNEK PROJELER\...
Sheet of
Drawn By: