PIC18F8722 Family
Data Sheet

64/80-Pin, 1-Mbit,
Enhanced Flash Microcontrollers
with 10-Bit A/D and nanoWatt Technology

© 2008 Microchip Technology Inc.

Note the following details of the code protection feature on Microchip devices:

- Microchip products meet the specification contained in their particular Microchip Data Sheet.
- Microchip believes that its family of products is one of the most secure families of its kind on the market today, when used in the intended manner and under normal conditions.
- There are dishonest and possibly illegal methods used to breach the code protection feature. All of these methods, to our knowledge, require using the Microchip products in a manner outside the operating specifications contained in Microchip's Data Sheets. Most likely, the person doing so is engaged in theft of intellectual property.
- Microchip is willing to work with the customer who is concerned about the integrity of their code.
- Neither Microchip nor any other semiconductor manufacturer can guarantee the security of their code. Code protection does not mean that we are guaranteeing the product as "unbreakable."

Code protection is constantly evolving. We at Microchip are committed to continuously improving the code protection features of our products. Attempts to break Microchip's code protection feature may be a violation of the Digital Millennium Copyright Act. If such acts allow unauthorized access to your software or other copyrighted work, you may have a right to sue for relief under that Act.

Information contained in this publication regarding device applications and the like is provided only for your convenience and may be superseded by updates. It is your responsibility to ensure that your application meets with your specifications. MICROCHIP MAKES NO REPRESENTATIONS OR WARRANTIES OF ANY KIND WHETHER EXPRESS OR IMPLIED, WRITTEN OR ORAL, STATUTORY OR OTHERWISE, RELATED TO THE INFORMATION, INCLUDING BUT NOT LIMITED TO ITS CONDITION, QUALITY, PERFORMANCE, MERCHANTABILITY OR FITNESS FOR PURPOSE**.** Microchip disclaims all liability arising from this information and its use. Use of Microchip devices in life support and/or safety applications is entirely at the buyer's risk, and the buyer agrees to defend, indemnify and hold harmless Microchip from any and all damages, claims, suits, or expenses resulting from such use. No licenses are conveyed, implicitly or otherwise, under any Microchip intellectual property rights.

Trademarks

The Microchip name and logo, the Microchip logo, Accuron, dsPIC, KEELOQ, KEELOQ logo, MPLAB, PIC, PICmicro, PICSTART, rfPIC, SmartShunt and UNI/O are registered trademarks of Microchip Technology Incorporated in the U.S.A. and other countries.

FilterLab, Linear Active Thermistor, MXDEV, MXLAB, SEEVAL, SmartSensor and The Embedded Control Solutions Company are registered trademarks of Microchip Technology Incorporated in the U.S.A.

Analog-for-the-Digital Age, Application Maestro, CodeGuard, dsPICDEM, dsPICDEM.net, dsPICworks, dsSPEAK, ECAN, ECONOMONITOR, FanSense, In-Circuit Serial Programming, ICSP, ICEPIC, Mindi, MiWi, MPASM, MPLAB Certified logo, MPLIB, MPLINK, mTouch, PICkit, PICDEM, PICDEM.net, PICtail, PIC^{32} logo, PowerCal, PowerInfo, PowerMate, PowerTool, REAL ICE, rfLAB, Select Mode, Total Endurance, WiperLock and ZENA are trademarks of Microchip Technology Incorporated in the U.S.A. and other countries.

SQTP is a service mark of Microchip Technology Incorporated in the U.S.A.

All other trademarks mentioned herein are property of their respective companies.

© 2008, Microchip Technology Incorporated, Printed in the U.S.A., All Rights Reserved.

Printed on recycled paper.

QUALITY MANAGEMENT SYSTEM
CERTIFIED BY DNV
ISO/TS 16949:2002

Microchip received ISO/TS-16949:2002 certification for its worldwide headquarters, design and wafer fabrication facilities in Chandler and Tempe, Arizona; Gresham, Oregon and design centers in California and India. The Company's quality system processes and procedures are for its PIC® MCUs and dsPIC® DSCs, KEELOQ® code hopping devices, Serial EEPROMs, microperipherals, nonvolatile memory and analog products. In addition, Microchip's quality system for the design and manufacture of development systems is ISO 9001:2000 certified.

PIC18F8722 FAMILY

64/80-Pin, 1-Mbit, Enhanced Flash Microcontrollers with 10-Bit A/D and nanoWatt Technology

Power Management Features:

- Run: CPU On, Peripherals On
- Idle: CPU Off, Peripherals On
- Sleep: CPU Off, Peripherals Off
- Ultra Low 50 nA Input Leakage
- Run mode Currents Down to 25 μA Typical
- Idle mode Currents Down to 6.8 μA Typical
- Sleep mode Current Down to 120 nA Typical
- Timer1 Oscillator: 900 nA, 32 kHz, 2V
- Watchdog Timer: 1.6 μA, 2V Typical
- Two-Speed Oscillator Start-up

Flexible Oscillator Structure:

- Four Crystal modes, up to 40 MHz
- 4x Phase Lock Loop (PLL) – Available for Crystal and Internal Oscillators
- Internal Oscillator Block:
  - Fast wake from Sleep and Idle, 1 μs typical
  - Provides a complete range of clock speeds from 31 kHz to 32 MHz when used with PLL
  - User-tunable to compensate for frequency drift
- Secondary oscillator using Timer1 @ 32 kHz
- Fail-Safe Clock Monitor:
  - Allows for safe shutdown if peripheral clock stops

Peripheral Highlights:

- High-Current Sink/Source 25 mA/25 mA
- Three Programmable External Interrupts
- Four Input Change Interrupts
- Enhanced Capture/Compare/PWM (ECCP) module (40/44-pin devices only):
  - One, two or four PWM outputs
  - Programmable dead time
  - Auto-shutdown and auto-restart

Peripheral Highlights (Continued):

- Up to 2 Capture/Compare/PWM (CCP) modules, one with Auto-Shutdown (28-pin devices)
- Master Synchronous Serial Port (MSSP) module Supporting 3-Wire SPI (all 4 modes) and I^2C™ Master and Slave modes
- Enhanced Addressable USART module:
  - Supports RS-485, RS-232 and LIN/J2602
  - RS-232 operation using internal oscillator block (no external crystal required)
- 10-Bit, up to 13-Channel Analog-to-Digital (A/D) Converter module:
  - Conversion available during Sleep
- Dual Analog Comparators with Input Multiplexing
- Programmable 16-Level High/Low-Voltage Detection (HLVD) module

Special Microcontroller Features:

- C Compiler Optimized Architecture
- 100,000 Erase/Write Cycle Enhanced Flash Program Memory Typical
- 1,000,000 Erase/Write Cycle Data EEPROM Memory Typical
- Flash/Data EEPROM Retention: 100 Years Typical
- Self-Programmable under Software Control
- Priority Levels for Interrupts
- 8 x 8 Single-Cycle Hardware Multiplier
- Extended Watchdog Timer (WDT):
  - Programmable period from 4 ms to 131s
- Single-Supply 5V In-Circuit Serial Programming™ (ICSP™) via Two Pins
- In-Circuit Debug (ICD) via Two Pins
- Wide Operating Voltage Range: 2.0V to 5.5V
- Programmable Brown-out Reset (BOR) with Software Enable Option

Device	Program Memory		Data Memory		I/O	10-Bit A/D (ch)	CCP/ ECCP (PWM)	MSSP			EUSART	Comparators	Timers 8/16-Bit	External Bus
	Flash (bytes)	# Single-Word Instructions	SRAM (bytes)	EEPROM (bytes)					SPI	Master I^2C™				
PIC18F6527	48K	24576	3936	1024	54	12	2/3	2	Y	Y	2	2	2/3	N
PIC18F6622	64K	32768	3936	1024	54	12	2/3	2	Y	Y	2	2	2/3	N
PIC18F6627	96K	49152	3936	1024	54	12	2/3	2	Y	Y	2	2	2/3	N
PIC18F6722	128K	65536	3936	1024	54	12	2/3	2	Y	Y	2	2	2/3	N
PIC18F8527	48K	24576	3936	1024	70	16	2/3	2	Y	Y	2	2	2/3	Y
PIC18F8622	64K	32768	3936	1024	70	16	2/3	2	Y	Y	2	2	2/3	Y
PIC18F8627	96K	49152	3936	1024	70	16	2/3	2	Y	Y	2	2	2/3	Y
PIC18F8722	128K	65536	3936	1024	70	16	2/3	2	Y	Y	2	2	2/3	Y

© 2008 Microchip Technology Inc.

Pin Diagrams

64-Pin TQFP

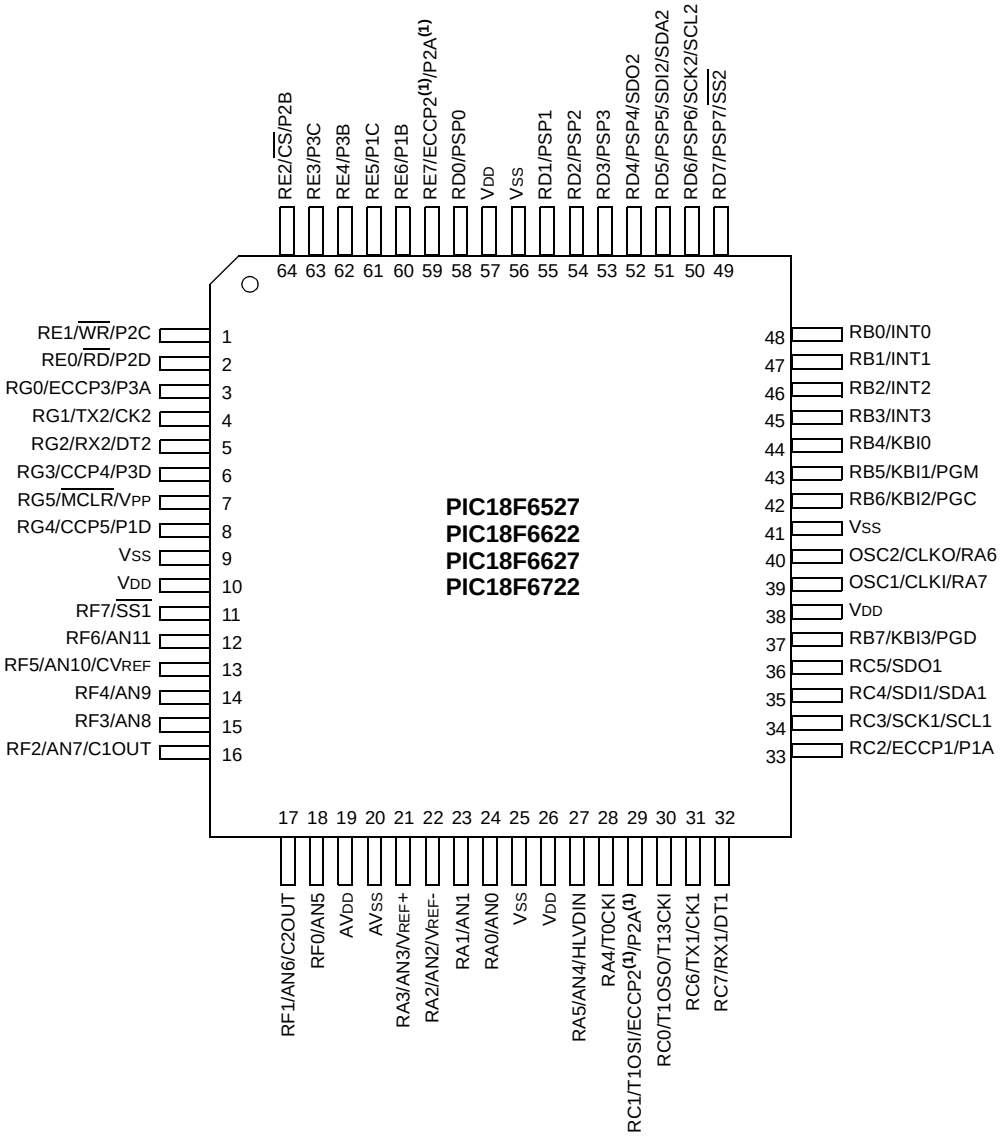

Note 1: The ECCP2/P2A pin placement is determined by the CCP2MX Configuration bit.

© 2008 Microchip Technology Inc.

Pin Diagrams (Continued)

80-Pin TQFP

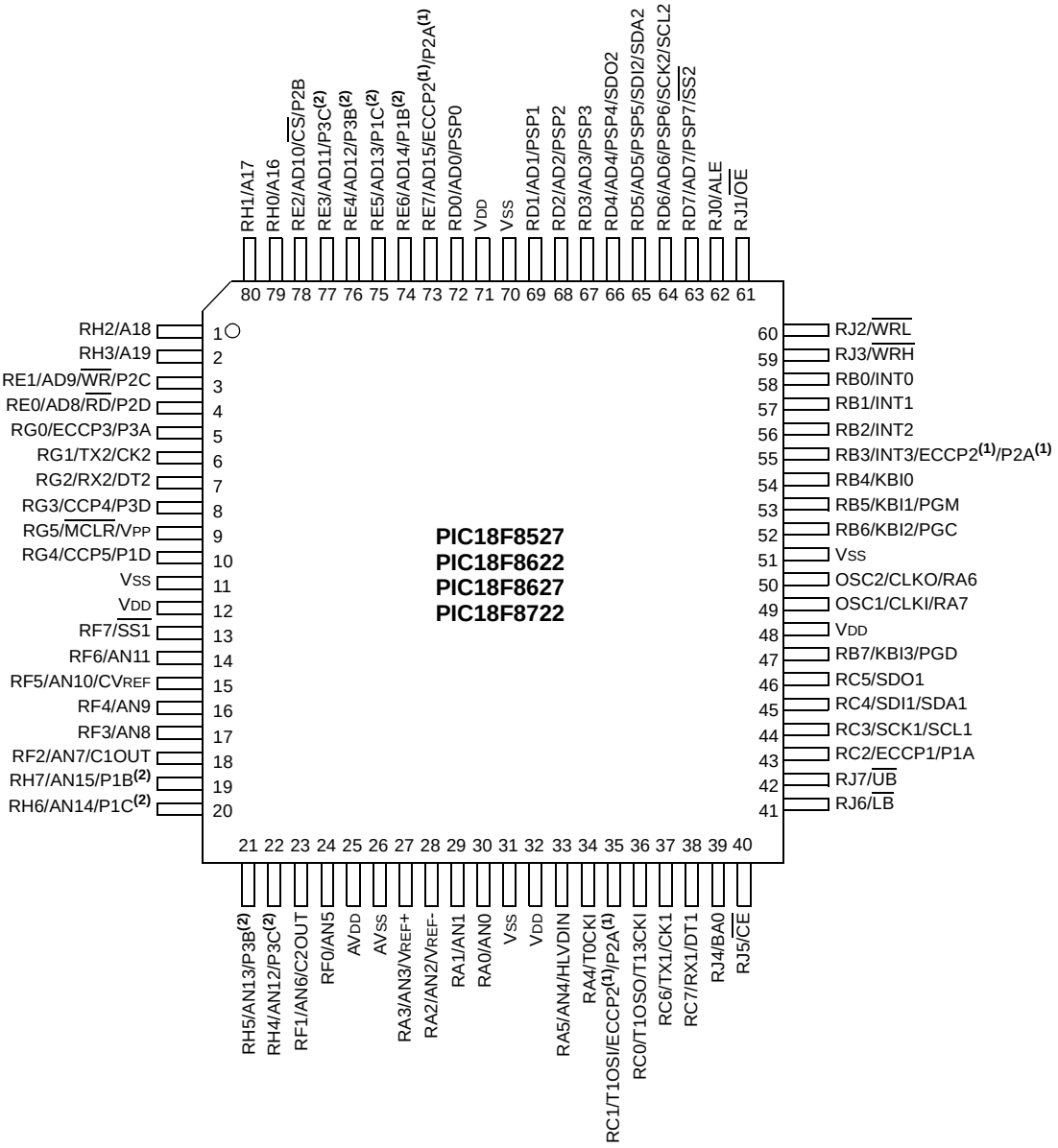

Note 1: The ECCP2/P2A pin placement is determined by the CCP2MX Configuration bit and Processor mode settings.
2: P1B, P1C, P3B and P3C pin placement is determined by the ECCPMX Configuration bit.

Table of Contents

1.0 Device Overview 7
2.0 Oscillator Configurations 31
3.0 Power-Managed Modes 41
4.0 Reset 49
5.0 Memory Organization 63
6.0 Flash Program Memory 87
7.0 External Memory Bus 97
8.0 Data EEPROM Memory 111
9.0 8 x 8 Hardware Multiplier 117
10.0 Interrupts 119
11.0 I/O Ports 135
12.0 Timer0 Module 161
13.0 Timer1 Module 165
14.0 Timer2 Module 171
15.0 Timer3 Module 173
16.0 Timer4 Module 177
17.0 Capture/Compare/PWM (CCP) Modules 179
18.0 Enhanced Capture/Compare/PWM (ECCP) Module 187
19.0 Master Synchronous Serial Port (MSSP) Module 205
20.0 Enhanced Universal Synchronous Receiver Transmitter (EUSART) 247
21.0 10-Bit Analog-to-Digital Converter (A/D) Module 271
22.0 Comparator Module 281
23.0 Comparator Voltage Reference Module 287
24.0 High/Low-Voltage Detect (HLVD) 291
25.0 Special Features of the CPU 297
26.0 Instruction Set Summary 321
27.0 Development Support 371
28.0 Electrical Characteristics 375
29.0 Packaging Information 419
Appendix A: Revision History 425
Appendix B: Device Differences 425
Appendix C: Conversion Considerations 426
Appendix D: Migration From Baseline to Enhanced Devices 426
Appendix E: Migration From Mid-Range to Enhanced Devices 427
Appendix F: Migration From High-End to Enhanced Devices 427
Index 429
The Microchip Web Site 441
Customer Change Notification Service 441
Customer Support 441
Reader Response 442
PIC18F8722 Family Product Identification System 443

© 2008 Microchip Technology Inc.

TO OUR VALUED CUSTOMERS

It is our intention to provide our valued customers with the best documentation possible to ensure successful use of your Microchip products. To this end, we will continue to improve our publications to better suit your needs. Our publications will be refined and enhanced as new volumes and updates are introduced.

If you have any questions or comments regarding this publication, please contact the Marketing Communications Department via E-mail at **docerrors@.microchip.com** or fax the **Reader Response Form** in the back of this data sheet to (480) 792-4150. We welcome your feedback.

Most Current Data Sheet

To obtain the most up-to-date version of this data sheet, please register at our Worldwide Web site at:

http://www.microchip.com

You can determine the version of a data sheet by examining its literature number found on the bottom outside corner of any page. The last character of the literature number is the version number, (e.g., DS30000A is version A of document DS30000).

Errata

An errata sheet, describing minor operational differences from the data sheet and recommended workarounds, may exist for current devices. As device/documentation issues become known to us, we will publish an errata sheet. The errata will specify the revision of silicon and revision of document to which it applies.

To determine if an errata sheet exists for a particular device, please check with one of the following:

- Microchip's Worldwide Web site; http://www.microchip.com
- Your local Microchip sales office (see last page)

When contacting a sales office, please specify which device, revision of silicon and data sheet (include literature number) you are using.

Customer Notification System

Register on our web site at **www.microchip.com** to receive the most current information on all of our products.

NOTES:

© 2008 Microchip Technology Inc.

1.0 DEVICE OVERVIEW

This document contains device specific information for the following devices:

- PIC18F6527
- PIC18F6622
- PIC18F6627
- PIC18F6722
- PIC18F8527
- PIC18F8622
- PIC18F8627
- PIC18F8722
- PIC18LF6527
- PIC18LF6622
- PIC18LF6627
- PIC18LF6722
- PIC18LF8527
- PIC18LF8622
- PIC18LF8627
- PIC18LF8722

This family offers the advantages of all PIC18 microcontrollers – namely, high computational performance at an economical price – with the addition of high-endurance, Enhanced Flash program memory. On top of these features, the PIC18F8722 family introduces design enhancements that make these microcontrollers a logical choice for many high-performance, power sensitive applications.

1.1 New Core Features

1.1.1 nanoWatt TECHNOLOGY

All of the devices in the PIC18F8722 family incorporate a range of features that can significantly reduce power consumption during operation. Key items include:

- **Alternate Run Modes:** By clocking the controller from the Timer1 source or the internal oscillator block, power consumption during code execution can be significantly reduced.
- **Multiple Idle Modes:** The controller can also run with its CPU core disabled but the peripherals still active. In these states, power consumption can be reduced even further.
- **On-the-fly Mode Switching:** The power-managed modes are invoked by user code during operation, allowing the user to incorporate power-saving ideas into their application's software design.
- **Low Consumption in Key Modules:** The power requirements for both Timer1 and the Watchdog Timer are minimized. See **Section 28.0 "Electrical Characteristics"** for values.

1.1.2 EXPANDED MEMORY

The PIC18F8722 family provides ample room for application code and includes members with 48, 64, 96 or 128 Kbytes of code space.

- **Data RAM and Data EEPROM:** The PIC18F8722 family also provides plenty of room for application data. The devices have 3936 bytes of data RAM, as well as 1024 bytes of data EEPROM, for long term retention of nonvolatile data.
- **Memory Endurance:** The Enhanced Flash cells for both program memory and data EEPROM are rated to last for many thousands of erase/write cycles, up to 100,000 for program memory and 1,000,000 for EEPROM. Data retention without refresh is conservatively estimated to be greater than 40 years.

1.1.3 MULTIPLE OSCILLATOR OPTIONS AND FEATURES

All of the devices in the PIC18F8722 family offer ten different oscillator options, allowing users a wide range of choices in developing application hardware. These include:

- Four Crystal modes, using crystals or ceramic resonators
- Two External Clock modes, offering the option of using two pins (oscillator input and a divide-by-4 clock output) or one pin (oscillator input, with the second pin reassigned as general I/O)
- Two External RC Oscillator modes with the same pin options as the External Clock modes
- An internal oscillator block which provides an 8 MHz clock and an INTRC source (approximately 31 kHz), as well as a range of 6 user selectable clock frequencies, between 125 kHz to 4 MHz, for a total of 8 clock frequencies. This option frees the two oscillator pins for use as additional general purpose I/O.
- A Phase Lock Loop (PLL) frequency multiplier, available to both the high-speed crystal and internal oscillator modes, which allows clock speeds of up to 40 MHz. Used with the internal oscillator, the PLL gives users a complete selection of clock speeds, from 31 kHz to 32 MHz – all without using an external crystal or clock circuit.

© 2008 Microchip Technology Inc.

Besides its availability as a clock source, the internal oscillator block provides a stable reference source that gives the family additional features for robust operation:

- **Fail-Safe Clock Monitor:** This option constantly monitors the main clock source against a reference signal provided by the internal oscillator. If a clock failure occurs, the controller is switched to the internal oscillator block, allowing for continued low-speed operation or a safe application shutdown.
- **Two-Speed Start-up:** This option allows the internal oscillator to serve as the clock source from Power-on Reset, or wake-up from Sleep mode, until the primary clock source is available.

1.1.4 EXTERNAL MEMORY INTERFACE

In the unlikely event that 128 Kbytes of program memory is inadequate for an application, the PIC18F8527/8622/8627/8722 members of the family also implement an external memory interface. This allows the controller's internal program counter to address a memory space of up to 2 Mbytes, permitting a level of data access that few 8-bit devices can claim.

With the addition of new operating modes, the external memory interface offers many new options, including:

- Operating the microcontroller entirely from external memory
- Using combinations of on-chip and external memory, up to the 2-Mbyte limit
- Using external Flash memory for reprogrammable application code or large data tables
- Using external RAM devices for storing large amounts of variable data

1.1.5 EASY MIGRATION

Regardless of the memory size, all devices share the same rich set of peripherals, allowing for a smooth migration path as applications grow and evolve.

The consistent pinout scheme used throughout the entire family also aids in migrating to the next larger device. This is true when moving between the 64-pin members, between the 80-pin members, or even jumping from 64-pin to 80-pin devices.

1.2 Other Special Features

- **Communications:** The PIC18F8722 family incorporates a range of serial communication peripherals, including 2 independent Enhanced USARTs and 2 Master SSP modules capable of both SPI and I^2C (Master and Slave) modes of operation. Also, one of the general purpose I/O ports can be reconfigured as an 8-bit Parallel Slave Port for direct processor-to-processor communications.
- **CCP Modules:** All devices in the family incorporate two Capture/Compare/PWM (CCP) modules and three Enhanced CCP (ECCP) modules to maximize flexibility in control applications. Up to four different time bases may be used to perform several different operations at once. Each of the three ECCP modules offer up to four PWM outputs, allowing for a total of 12 PWMs. The ECCPs also offer many beneficial features, including polarity selection, Programmable Dead-Time, Auto-Shutdown and Restart and Half-Bridge and Full-Bridge Output modes.
- **Self-Programmability:** These devices can write to their own program memory spaces under internal software control. By using a bootloader routine located in the protected boot block at the top of program memory, it becomes possible to create an application that can update itself in the field.
- **Extended Instruction Set:** The PIC18F8722 family introduces an optional extension to the PIC18 instruction set, which adds 8 new instructions and an Indexed Addressing mode. This extension, enabled as a device configuration option, has been specifically designed to optimize re-entrant application code originally developed in high-level languages, such as C.
- **10-bit A/D Converter:** This module incorporates programmable acquisition time, allowing for a channel to be selected and a conversion to be initiated without waiting for a sampling period and thus, reduce code overhead.
- **Extended Watchdog Timer (WDT):** This enhanced version incorporates a 16-bit prescaler, allowing an extended time-out range that is stable across operating voltage and temperature. See **Section 28.0 "Electrical Characteristics"** for time-out periods.

© 2008 Microchip Technology Inc.

1.3 Details on Individual Family Members

Devices in the PIC18F8722 family are available in 64-pin and 80-pin packages. Block diagrams for the two groups are shown in Figure 1-1 and Figure 1-2.

The devices are differentiated from each other in five ways:

1. Flash program memory (48 Kbytes for PIC18F6527/8527 devices, 64 Kbytes for PIC18F6622/8622 devices, 96 Kbytes for PIC18F6627/8627 devices and 128 Kbytes for PIC18F6722/8722).
2. A/D channels (12 for 64-pin devices, 16 for 80-pin devices).
3. I/O ports (7 bidirectional ports on 64-pin devices, 9 bidirectional ports on 80-pin devices).
4. External Memory Bus, configurable for 8 and 16-bit operation, is available on PIC18F8527/8622/8627/8722 devices.

All other features for devices in this family are identical. These are summarized in Table 1-2 and Table 1-2.

The pinouts for all devices are listed in Table 1-3 and Table 1-4.

Like all Microchip PIC18 devices, members of the PIC18F8722 family are available as both standard and low-voltage devices. Standard devices with Enhanced Flash memory, designated with an “F” in the part number (such as PIC18**F**6627), accommodate an operating V_{DD} range of 4.2V to 5.5V. Low-voltage parts, designated by “LF” (such as PIC18**LF**6627), function over an extended V_{DD} range of 2.0V to 5.5V.

TABLE 1-1: DEVICE FEATURES (PIC18F6527/6622/6627/6722)

Features	PIC18F6527	PIC18F6622	PIC18F6627	PIC18F6722
Operating Frequency	DC – 40 MHz	DC – 40 MHz	DC – 40 MHz	DC – 40 MHz
Program Memory (Bytes)	48K	64K	96K	128K
Program Memory (Instructions)	24576	32768	49152	65536
Data Memory (Bytes)	3936	3936	3936	3936
Data EEPROM Memory (Bytes)	1024	1024	1024	1024
Interrupt Sources	28	28	28	28
I/O Ports	Ports A, B, C, D, E, F, G	Ports A, B, C, D, E, F, G	Ports A, B, C, D, E, F, G	Ports A, B, C, D, E, F, G
Timers	5	5	5	5
Capture/Compare/PWM Modules	2	2	2	2
Enhanced Capture/Compare/ PWM Modules	3	3	3	3
Enhanced USART	2	2	2	2
Serial Communications	MSSP, Enhanced USART	MSSP, Enhanced USART	MSSP, Enhanced USART	MSSP, Enhanced USART
Parallel Communications (PSP)	Yes	Yes	Yes	Yes
10-bit Analog-to-Digital Module	12 Input Channels	12 Input Channels	12 Input Channels	12 Input Channels
Resets (and Delays)	POR, BOR, RESET Instruction, Stack Full, Stack Underflow (PWRT, OST), MCLR (optional), WDT	POR, BOR, RESET Instruction, Stack Full, Stack Underflow (PWRT, OST), MCLR (optional), WDT	POR, BOR, RESET Instruction, Stack Full, Stack Underflow (PWRT, OST), MCLR (optional), WDT	POR, BOR, RESET Instruction, Stack Full, Stack Underflow (PWRT, OST), MCLR (optional), WDT
Programmable High/Low-Voltage Detect	Yes	Yes	Yes	Yes
Programmable Brown-out Reset	Yes	Yes	Yes	Yes
Instruction Set	75 Instructions; 83 with Extended Instruction Set enabled	75 Instructions; 83 with Extended Instruction Set enabled	75 Instructions; 83 with Extended Instruction Set enabled	75 Instructions; 83 with Extended Instruction Set enabled
Packages	64-pin TQFP	64-pin TQFP	64-pin TQFP	64-pin TQFP

TABLE 1-2: DEVICE FEATURES (PIC18F8527/8622/8627/8722)

Features	PIC18F8527	PIC18F8622	PIC18F8627	PIC18F8722
Operating Frequency	DC – 40 MHz	DC – 40 MHz	DC – 40 MHz	DC – 40 MHz
Program Memory (Bytes)	48K	64K	96K	128K
Program Memory (Instructions)	24576	32768	49152	65536
Data Memory (Bytes)	3936	3936	3936	3936
Data EEPROM Memory (Bytes)	1024	1024	1024	1024
Interrupt Sources	29	29	29	29
I/O Ports	Ports A, B, C, D, E, F, G, H, J	Ports A, B, C, D, E, F, G, H, J	Ports A, B, C, D, E, F, G, H, J	Ports A, B, C, D, E, F, G, H, J
Timers	5	5	5	5
Capture/Compare/PWM Modules	2	2	2	2
Enhanced Capture/Compare/ PWM Modules	3	3	3	3
Enhanced USART	2	2	2	2
Serial Communications	MSSP, Enhanced USART	MSSP, Enhanced USART	MSSP, Enhanced USART	MSSP, Enhanced USART
Parallel Communications (PSP)	Yes	Yes	Yes	Yes
10-bit Analog-to-Digital Module	16 Input Channels	16 Input Channels	16 Input Channels	16 Input Channels
Resets (and Delays)	POR, BOR, RESET Instruction, Stack Full, Stack Underflow (PWRT, OST), $\overline{\text{MCLR}}$ (optional), WDT	POR, BOR, RESET Instruction, Stack Full, Stack Underflow (PWRT, OST), $\overline{\text{MCLR}}$ (optional), WDT	POR, BOR, RESET Instruction, Stack Full, Stack Underflow (PWRT, OST), $\overline{\text{MCLR}}$ (optional), WDT	POR, BOR, RESET Instruction, Stack Full, Stack Underflow (PWRT, OST), $\overline{\text{MCLR}}$ (optional), WDT
Programmable High/Low-Voltage Detect	Yes	Yes	Yes	Yes
Programmable Brown-out Reset	Yes	Yes	Yes	Yes
Instruction Set	75 Instructions; 83 with Extended Instruction Set enabled	75 Instructions; 83 with Extended Instruction Set enabled	75 Instructions; 83 with Extended Instruction Set enabled	75 Instructions; 83 with Extended Instruction Set enabled
Packages	80-pin TQFP	80-pin TQFP	80-pin TQFP	80-pin TQFP

© 2008 Microchip Technology Inc.

FIGURE 1-1: PIC18F6527/6622/6627/6722 (64-PIN) BLOCK DIAGRAM

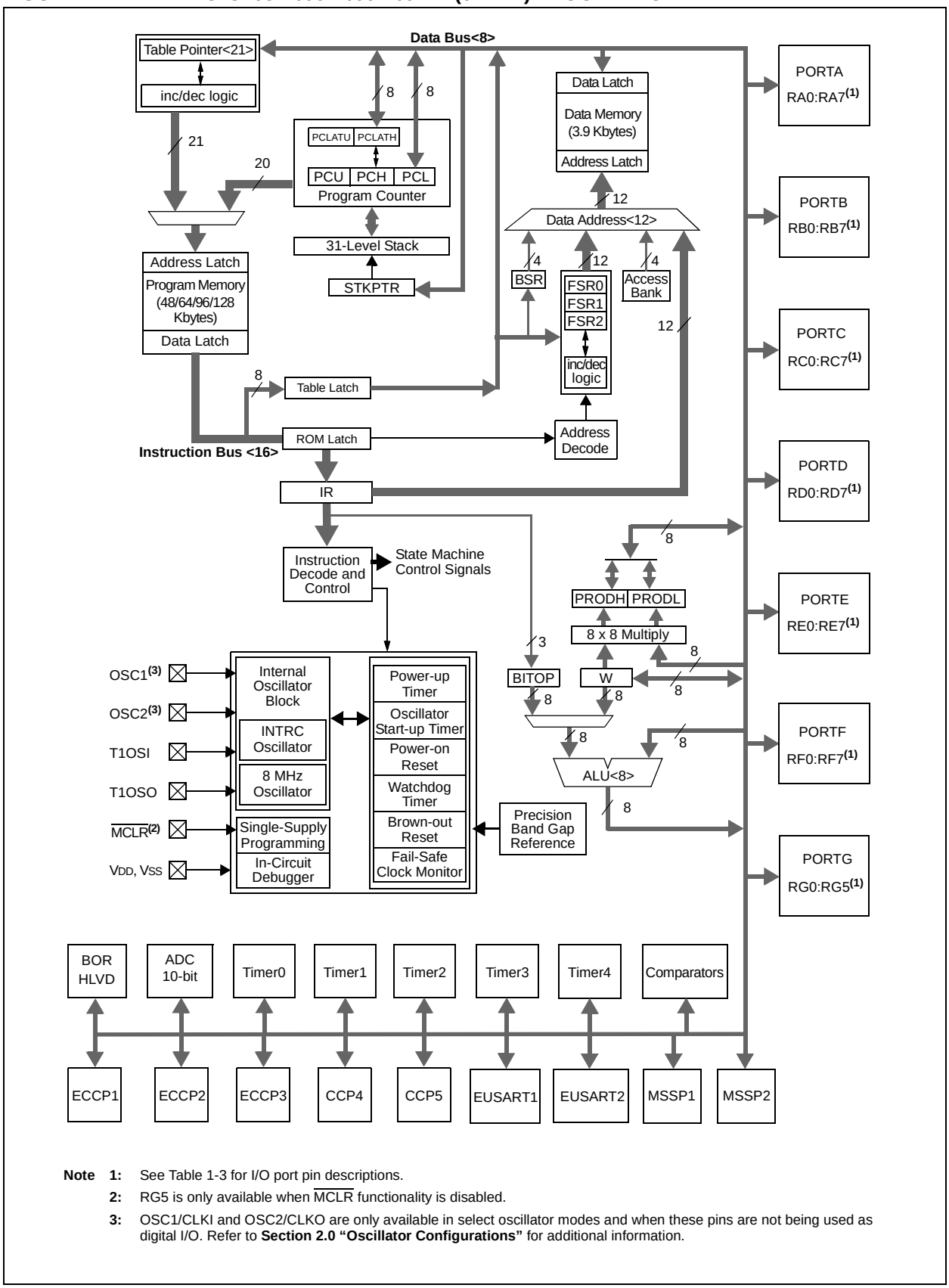

Note 1: See Table 1-3 for I/O port pin descriptions.

2: RG5 is only available when $\overline{\text{MCLR}}$ functionality is disabled.

3: OSC1/CLKI and OSC2/CLKO are only available in select oscillator modes and when these pins are not being used as digital I/O. Refer to **Section 2.0 "Oscillator Configurations"** for additional information.

FIGURE 1-2: PIC18F8527/8622/8627/8722 (80-PIN) BLOCK DIAGRAM

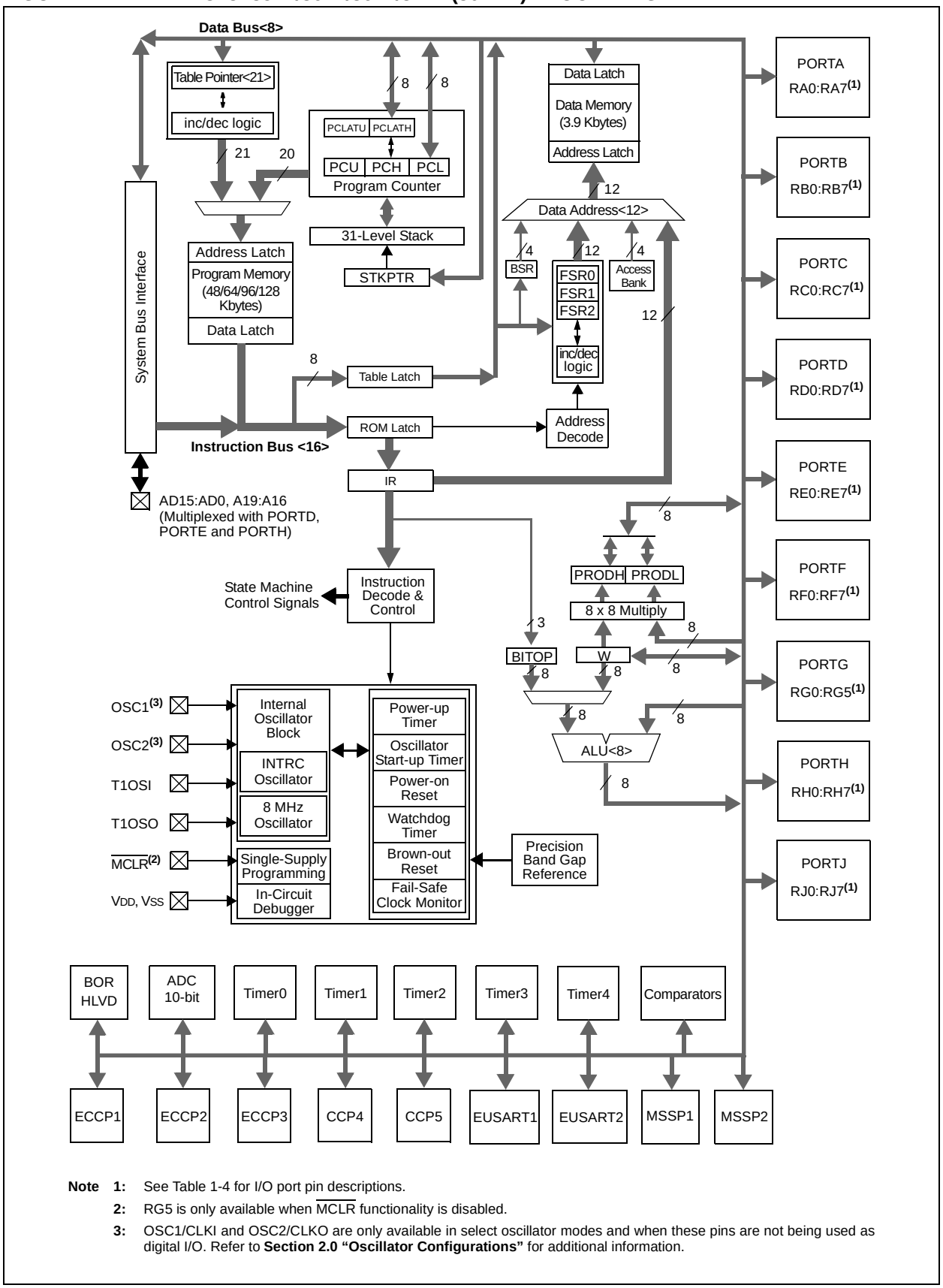

Note 1: See Table 1-4 for I/O port pin descriptions.

2: RG5 is only available when $\overline{\text{MCLR}}$ functionality is disabled.

3: OSC1/CLKI and OSC2/CLKO are only available in select oscillator modes and when these pins are not being used as digital I/O. Refer to **Section 2.0 "Oscillator Configurations"** for additional information.

© 2008 Microchip Technology Inc.

TABLE 1-3: PIC18F6527/6622/6627/6722 PINOUT I/O DESCRIPTIONS

Pin Name	Pin Number TQFP	Pin Type	Buffer Type	Description
RG5/$\overline{\text{MCLR}}$/VPP	7			Master Clear (input) or programming voltage (input).
RG5		I	ST	Digital input.
$\overline{\text{MCLR}}$		I	ST	Master Clear (Reset) input. This pin is an active-low Reset to the device.
VPP		P		Programming voltage input.
OSC1/CLKI/RA7	39			Oscillator crystal or external clock input.
OSC1		I	ST	Oscillator crystal input or external clock source input. ST buffer when configured in RC mode, CMOS otherwise.
CLKI		I	CMOS	External clock source input. Always associated with pin function OSC1. (See related OSC1/CLKI, OSC2/CLKO pins.)
RA7		I/O	TTL	General purpose I/O pin.
OSC2/CLKO/RA6	40			Oscillator crystal or clock output.
OSC2		O	—	Oscillator crystal output. Connects to crystal or resonator in Crystal Oscillator mode.
CLKO		O	—	In RC mode, OSC2 pin outputs CLKO, which has 1/4 the frequency of OSC1 and denotes the instruction cycle rate.
RA6		I/O	TTL	General purpose I/O pin.

Legend: TTL = TTL compatible input; CMOS = CMOS compatible input or output; ST = Schmitt Trigger input with CMOS levels; Analog = Analog input; I = Input; O = Output; P = Power; I^2C™ = I^2C/SMBus input buffer

Note 1: Default assignment for ECCP2 when Configuration bit, CCP2MX, is set.

2: Alternate assignment for ECCP2 when Configuration bit, CCP2MX, is cleared.

TABLE 1-3: PIC18F6527/6622/6627/6722 PINOUT I/O DESCRIPTIONS (CONTINUED)

Pin Name	Pin Number TQFP	Pin Type	Buffer Type	Description
				PORTA is a bidirectional I/O port.
RA0/AN0	24			
RA0		I/O	TTL	Digital I/O.
AN0		I	Analog	Analog input 0.
RA1/AN1	23			
RA1		I/O	TTL	Digital I/O.
AN1		I	Analog	Analog input 1.
RA2/AN2/VREF-	22			
RA2		I/O	TTL	Digital I/O.
AN2		I	Analog	Analog input 2.
VREF-		I	Analog	A/D reference voltage (low) input.
RA3/AN3/VREF+	21			
RA3		I/O	TTL	Digital I/O.
AN3		I	Analog	Analog input 3.
VREF+		I	Analog	A/D reference voltage (high) input.
RA4/T0CKI	28			
RA4		I/O	ST	Digital I/O.
T0CKI		I	ST	Timer0 external clock input.
RA5/AN4/HLVDIN	27			
RA5		I/O	TTL	Digital I/O.
AN4		I	Analog	Analog input 4.
HLVDIN		I	Analog	High/Low-Voltage Detect input.
RA6				See the OSC2/CLKO/RA6 pin.
RA7				See the OSC1/CLKI/RA7 pin.

Legend: TTL = TTL compatible input CMOS = CMOS compatible input or output
ST = Schmitt Trigger input with CMOS levels Analog= Analog input
I = Input O = Output
P = Power I^2C™ = I^2C/SMBus input buffer

Note 1: Default assignment for ECCP2 when Configuration bit, CCP2MX, is set.
2: Alternate assignment for ECCP2 when Configuration bit, CCP2MX, is cleared.

© 2008 Microchip Technology Inc.

TABLE 1-3: PIC18F6527/6622/6627/6722 PINOUT I/O DESCRIPTIONS (CONTINUED)

Pin Name	Pin Number TQFP	Pin Type	Buffer Type	Description
				PORTB is a bidirectional I/O port. PORTB can be software programmed for internal weak pull-ups on all inputs.
RB0/INT0/FLT0	48			
RB0		I/O	TTL	Digital I/O.
INT0		I	ST	External interrupt 0.
FLT0		I	ST	PWM Fault input for ECCPx.
RB1/INT1	47			
RB1		I/O	TTL	Digital I/O.
INT1		I	ST	External interrupt 1.
RB2/INT2	46			
RB2		I/O	TTL	Digital I/O.
INT2		I	ST	External interrupt 2.
RB3/INT3	45			
RB3		I/O	TTL	Digital I/O.
INT3		I	ST	External interrupt 3.
RB4/KBI0	44			
RB4		I/O	TTL	Digital I/O.
KBI0		I	TTL	Interrupt-on-change pin.
RB5/KBI1/PGM	43			
RB5		I/O	TTL	Digital I/O.
KBI1		I	TTL	Interrupt-on-change pin.
PGM		I/O	ST	Low-Voltage ICSP™ Programming enable pin.
RB6/KBI2/PGC	42			
RB6		I/O	TTL	Digital I/O.
KBI2		I	TTL	Interrupt-on-change pin.
PGC		I/O	ST	In-Circuit Debugger and ICSP programming clock pin.
RB7/KBI3/PGD	37			
RB7		I/O	TTL	Digital I/O.
KBI3		I	TTL	Interrupt-on-change pin.
PGD		I/O	ST	In-Circuit Debugger and ICSP programming data pin.

Legend: TTL = TTL compatible input; CMOS = CMOS compatible input or output; ST = Schmitt Trigger input with CMOS levels; Analog = Analog input; I = Input; O = Output; P = Power; I^2C™ = I^2C/SMBus input buffer

Note 1: Default assignment for ECCP2 when Configuration bit, CCP2MX, is set.

2: Alternate assignment for ECCP2 when Configuration bit, CCP2MX, is cleared.

TABLE 1-3: PIC18F6527/6622/6627/6722 PINOUT I/O DESCRIPTIONS (CONTINUED)

Pin Name	Pin Number TQFP	Pin Type	Buffer Type	Description
				PORTC is a bidirectional I/O port.
RC0/T1OSO/T13CKI	30			
RC0		I/O	ST	Digital I/O.
T1OSO		O	—	Timer1 oscillator output.
T13CKI		I	ST	Timer1/Timer3 external clock input.
RC1/T1OSI/ECCP2/P2A	29			
RC1		I/O	ST	Digital I/O.
T1OSI		I	CMOS	Timer1 oscillator input.
ECCP2(1)		I/O	ST	Enhanced Capture 2 input/Compare 2 output/ PWM 2 output.
P2A(1)		O	—	ECCP2 PWM output A.
RC2/ECCP1/P1A	33			
RC2		I/O	ST	Digital I/O.
ECCP1		I/O	ST	Enhanced Capture 1 input/Compare 1 output/ PWM 1 output.
P1A		O	—	ECCP1 PWM output A.
RC3/SCK1/SCL1	34			
RC3		I/O	ST	Digital I/O.
SCK1		I/O	ST	Synchronous serial clock input/output for SPI mode.
SCL1		I/O	ST	Synchronous serial clock input/output for I^2C™ mode.
RC4/SDI1/SDA1	35			
RC4		I/O	ST	Digital I/O.
SDI1		I	ST	SPI data in.
SDA1		I/O	ST	I^2C data I/O.
RC5/SDO1	36			
RC5		I/O	ST	Digital I/O.
SDO1		O	—	SPI data out.
RC6/TX1/CK1	31			
RC6		I/O	ST	Digital I/O.
TX1		O	—	EUSART1 asynchronous transmit.
CK1		I/O	ST	EUSART1 synchronous clock (see related RX1/DT1).
RC7/RX1/DT1	32			
RC7		I/O	ST	Digital I/O.
RX1		I	ST	EUSART1 asynchronous receive.
DT1		I/O	ST	EUSART1 synchronous data (see related TX1/CK1).

Legend: TTL = TTL compatible input; CMOS = CMOS compatible input or output; ST = Schmitt Trigger input with CMOS levels; Analog = Analog input; I = Input; O = Output; P = Power; I^2C™ = I^2C/SMBus input buffer

Note 1: Default assignment for ECCP2 when Configuration bit, CCP2MX, is set.

2: Alternate assignment for ECCP2 when Configuration bit, CCP2MX, is cleared.

© 2008 Microchip Technology Inc.

TABLE 1-3: PIC18F6527/6622/6627/6722 PINOUT I/O DESCRIPTIONS (CONTINUED)

Pin Name	Pin Number TQFP	Pin Type	Buffer Type	Description
				PORTD is a bidirectional I/O port.
RD0/PSP0	58			
RD0		I/O	ST	Digital I/O.
PSP0		I/O	TTL	Parallel Slave Port data.
RD1/PSP1	55			
RD1		I/O	ST	Digital I/O.
PSP1		I/O	TTL	Parallel Slave Port data.
RD2/PSP2	54			
RD2		I/O	ST	Digital I/O.
PSP2		I/O	TTL	Parallel Slave Port data.
RD3/PSP3	53			
RD3		I/O	ST	Digital I/O.
PSP3		I/O	TTL	Parallel Slave Port data.
RD4/PSP4/SDO2	52			
RD4		I/O	ST	Digital I/O.
PSP4		I/O	TTL	Parallel Slave Port data.
SDO2		O	—	SPI data out.
RD5/PSP5/SDI2/SDA2	51			
RD5		I/O	ST	Digital I/O.
PSP5		I/O	TTL	Parallel Slave Port data.
SDI2		I	ST	SPI data in.
SDA2		I/O	I^2C/SMB	I^2C™ data I/O.
RD6/PSP6/SCK2/SCL2	50			
RD6		I/O	ST	Digital I/O.
PSP6		I/O	TTL	Parallel Slave Port data.
SCK2		I/O	ST	Synchronous serial clock input/output for SPI mode.
SCL2		I/O	I^2C/SMB	Synchronous serial clock input/output for I^2C mode.
RD7/PSP7/$\overline{SS2}$	49			
RD7		I/O	ST	Digital I/O.
PSP7		I/O	TTL	Parallel Slave Port data.
$\overline{SS2}$		I	TTL	SPI slave select input.

Legend: TTL = TTL compatible input; CMOS = CMOS compatible input or output; ST = Schmitt Trigger input with CMOS levels; Analog = Analog input; I = Input; O = Output; P = Power; I^2C™ = I^2C/SMBus input buffer

Note 1: Default assignment for ECCP2 when Configuration bit, CCP2MX, is set.

2: Alternate assignment for ECCP2 when Configuration bit, CCP2MX, is cleared.

TABLE 1-3: PIC18F6527/6622/6627/6722 PINOUT I/O DESCRIPTIONS (CONTINUED)

Pin Name	Pin Number TQFP	Pin Type	Buffer Type	Description
				PORTE is a bidirectional I/O port.
RE0/$\overline{\text{RD}}$/P2D	2			
RE0		I/O	ST	Digital I/O.
$\overline{\text{RD}}$		I	TTL	Read control for Parallel Slave Port.
P2D		O	—	ECCP2 PWM output D.
RE1/$\overline{\text{WR}}$/P2C	1			
RE1		I/O	ST	Digital I/O.
$\overline{\text{WR}}$		I	TTL	Write control for Parallel Slave Port.
P2C		O	—	ECCP2 PWM output C.
RE2/$\overline{\text{CS}}$/P2B	64			
RE2		I/O	ST	Digital I/O.
$\overline{\text{CS}}$		I	TTL	Chip select control for Parallel Slave Port.
P2B		O	—	ECCP2 PWM output B.
RE3/P3C	63			
RE3		I/O	ST	Digital I/O.
P3C		O	—	ECCP3 PWM output C.
RE4/P3B	62			
RE4		I/O	ST	Digital I/O.
P3B		O	—	ECCP3 PWM output B.
RE5/P1C	61			
RE5		I/O	ST	Digital I/O.
P1C		O	—	ECCP1 PWM output C.
RE6/P1B	60			
RE6		I/O	ST	Digital I/O.
P1B		O	—	ECCP1 PWM output B.
RE7/ECCP2/P2A	59			
RE7		I/O	ST	Digital I/O.
ECCP2(2)		I/O	ST	Enhanced Capture 2 input/Compare 2 output/ PWM 2 output.
P2A(2)		O	—	ECCP2 PWM output A.

Legend: TTL = TTL compatible input; CMOS = CMOS compatible input or output; ST = Schmitt Trigger input with CMOS levels; Analog = Analog input; I = Input; O = Output; P = Power; I^2C™ = I^2C/SMBus input buffer

Note 1: Default assignment for ECCP2 when Configuration bit, CCP2MX, is set.

2: Alternate assignment for ECCP2 when Configuration bit, CCP2MX, is cleared.

© 2008 Microchip Technology Inc.

TABLE 1-3: PIC18F6527/6622/6627/6722 PINOUT I/O DESCRIPTIONS (CONTINUED)

Pin Name	Pin Number TQFP	Pin Type	Buffer Type	Description
				PORTF is a bidirectional I/O port.
RF0/AN5	18			
RF0		I/O	ST	Digital I/O.
AN5		I	Analog	Analog input 5.
RF1/AN6/C2OUT	17			
RF1		I/O	ST	Digital I/O.
AN6		I	Analog	Analog input 6.
C2OUT		O	—	Comparator 2 output.
RF2/AN7/C1OUT	16			
RF2		I/O	ST	Digital I/O.
AN7		I	Analog	Analog input 7.
C1OUT		O	—	Comparator 1 output.
RF3/AN8	15			
RF3		I/O	ST	Digital I/O.
AN8		I	Analog	Analog input 8.
RF4/AN9	14			
RF4		I/O	ST	Digital I/O.
AN9		I	Analog	Analog input 9.
RF5/AN10/CVREF	13			
RF5		I/O	ST	Digital I/O.
AN10		I	Analog	Analog input 10.
CVREF		O	Analog	Comparator reference voltage output.
RF6/AN11	12			
RF6		I/O	ST	Digital I/O.
AN11		I	Analog	Analog input 11.
RF7/$\overline{SS1}$	11			
RF7		I/O	ST	Digital I/O.
$\overline{SS1}$		I	TTL	SPI slave select input.

Legend: TTL = TTL compatible input; CMOS = CMOS compatible input or output; ST = Schmitt Trigger input with CMOS levels; Analog = Analog input; I = Input; O = Output; P = Power; I^2C™ = I^2C/SMBus input buffer

Note 1: Default assignment for ECCP2 when Configuration bit, CCP2MX, is set.

2: Alternate assignment for ECCP2 when Configuration bit, CCP2MX, is cleared.

TABLE 1-3: PIC18F6527/6622/6627/6722 PINOUT I/O DESCRIPTIONS (CONTINUED)

Pin Name	Pin Number TQFP	Pin Type	Buffer Type	Description
				PORTG is a bidirectional I/O port.
RG0/ECCP3/P3A	3			
RG0		I/O	ST	Digital I/O.
ECCP3		I/O	ST	Enhanced Capture 3 input/Compare 3 output/ PWM 3 output.
P3A		O	—	ECCP3 PWM output A.
RG1/TX2/CK2	4			
RG1		I/O	ST	Digital I/O.
TX2		O	—	EUSART2 asynchronous transmit.
CK2		I/O	ST	EUSART2 synchronous clock (see related RX2/DT2).
RG2/RX2/DT2	5			
RG2		I/O	ST	Digital I/O.
RX2		I	ST	EUSART2 asynchronous receive.
DT2		I/O	ST	EUSART2 synchronous data (see related TX2/CK2).
RG3/CCP4/P3D	6			
RG3		I/O	ST	Digital I/O.
CCP4		I/O	ST	Capture 4 input/Compare 4 output/PWM 4 output.
P3D		O	—	ECCP3 PWM output D.
RG4/CCP5/P1D	8			
RG4		I/O	ST	Digital I/O.
CCP5		I/O	ST	Capture 5 input/Compare 5 output/PWM 5 output.
P1D		O	—	ECCP1 PWM output D.
RG5				See RG5/$\overline{\text{MCLR}}$/VPP pin.
VSS	9, 25, 41, 56	P	—	Ground reference for logic and I/O pins.
VDD	10, 26, 38, 57	P	—	Positive supply for logic and I/O pins.
AVSS	20	P	—	Ground reference for analog modules.
AVDD	19	P	—	Positive supply for analog modules.

Legend: TTL = TTL compatible input; CMOS = CMOS compatible input or output; ST = Schmitt Trigger input with CMOS levels; Analog = Analog input; I = Input; O = Output; P = Power; I^2C™ = I^2C/SMBus input buffer

Note 1: Default assignment for ECCP2 when Configuration bit, CCP2MX, is set.

2: Alternate assignment for ECCP2 when Configuration bit, CCP2MX, is cleared.

© 2008 Microchip Technology Inc.

TABLE 1-4: PIC18F8527/8622/8627/8722 PINOUT I/O DESCRIPTIONS

Pin Name	Pin Number TQFP	Pin Type	Buffer Type	Description
RG5/$\overline{\text{MCLR}}$/VPP	9			Master Clear (input) or programming voltage (input).
RG5		I	ST	Digital input.
$\overline{\text{MCLR}}$		I	ST	Master Clear (Reset) input. This pin is an active-low Reset to the device.
VPP		P		Programming voltage input.
OSC1/CLKI/RA7	49			Oscillator crystal or external clock input.
OSC1		I	ST	Oscillator crystal input or external clock source input. ST buffer when configured in RC mode, CMOS otherwise.
CLKI		I	CMOS	External clock source input. Always associated with pin function OSC1. (See related OSC1/CLKI, OSC2/CLKO pins.)
RA7		I/O	TTL	General purpose I/O pin.
OSC2/CLKO/RA6	50			Oscillator crystal or clock output.
OSC2		O	—	Oscillator crystal output. Connects to crystal or resonator in Crystal Oscillator mode.
CLKO		O	—	In RC mode, OSC2 pin outputs CLKO, which has 1/4 the frequency of OSC1 and denotes the instruction cycle rate.
RA6		I/O	TTL	General purpose I/O pin.

Legend: TTL = TTL compatible input; CMOS = CMOS compatible input or output; ST = Schmitt Trigger input with CMOS levels; Analog = Analog input; I = Input; O = Output; P = Power; I^2C™/SMB = I^2C/SMBus input buffer

Note 1: Alternate assignment for ECCP2 when Configuration bit, CCP2MX, is cleared (all operating modes except Microcontroller mode).

2: Default assignment for ECCP2 in all operating modes (CCP2MX is set).

3: Alternate assignment for ECCP2 when CCP2MX is cleared (Microcontroller mode only).

4: Default assignment for P1B/P1C/P3B/P3C (ECCPMX is set).

5: Alternate assignment for P1B/P1C/P3B/P3C (ECCPMX is clear).

TABLE 1-4: PIC18F8527/8622/8627/8722 PINOUT I/O DESCRIPTIONS (CONTINUED)

Pin Name	Pin Number TQFP	Pin Type	Buffer Type	Description
				PORTA is a bidirectional I/O port.
RA0/AN0	30			
RA0		I/O	TTL	Digital I/O.
AN0		I	Analog	Analog input 0.
RA1/AN1	29			
RA1		I/O	TTL	Digital I/O.
AN1		I	Analog	Analog input 1.
RA2/AN2/VREF-	28			
RA2		I/O	TTL	Digital I/O.
AN2		I	Analog	Analog input 2.
VREF-		I	Analog	A/D reference voltage (low) input.
RA3/AN3/VREF+	27			
RA3		I/O	TTL	Digital I/O.
AN3		I	Analog	Analog input 3.
VREF+		I	Analog	A/D reference voltage (high) input.
RA4/T0CKI	34			
RA4		I/O	ST/OD	Digital I/O. Open-drain when configured as output.
T0CKI		I	ST	Timer0 external clock input.
RA5/AN4/HLVDIN	33			
RA5		I/O	TTL	Digital I/O.
AN4		I	Analog	Analog input 4.
HLVDIN		I	Analog	High/Low-Voltage Detect input.
RA6				See the OSC2/CLKO/RA6 pin.
RA7				See the OSC1/CLKI/RA7 pin.

Legend: TTL = TTL compatible input; CMOS = CMOS compatible input or output; ST = Schmitt Trigger input with CMOS levels; Analog = Analog input; I = Input; O = Output; P = Power; I^2C™/SMB = I^2C/SMBus input buffer

Note 1: Alternate assignment for ECCP2 when Configuration bit, CCP2MX, is cleared (all operating modes except Microcontroller mode).

2: Default assignment for ECCP2 in all operating modes (CCP2MX is set).

3: Alternate assignment for ECCP2 when CCP2MX is cleared (Microcontroller mode only).

4: Default assignment for P1B/P1C/P3B/P3C (ECCPMX is set).

5: Alternate assignment for P1B/P1C/P3B/P3C (ECCPMX is clear).

© 2008 Microchip Technology Inc.

TABLE 1-4: PIC18F8527/8622/8627/8722 PINOUT I/O DESCRIPTIONS (CONTINUED)

Pin Name	Pin Number TQFP	Pin Type	Buffer Type	Description
				PORTB is a bidirectional I/O port. PORTB can be software programmed for internal weak pull-ups on all inputs.
RB0/INT0/FLT0	58			
RB0		I/O	TTL	Digital I/O.
INT0		I	ST	External interrupt 0.
FLT0		I	ST	PWM Fault input for ECCPx.
RB1/INT1	57			
RB1		I/O	TTL	Digital I/O.
INT1		I	ST	External interrupt 1.
RB2/INT2	56			
RB2		I/O	TTL	Digital I/O.
INT2		I	ST	External interrupt 2.
RB3/INT3/ECCP2/P2A	55			
RB3		I/O	TTL	Digital I/O.
INT3		I	ST	External interrupt 3.
ECCP2(1)		O	—	Enhanced Capture 2 input/Compare 2 output/ PWM 2 output.
P2A(1)		O	—	ECCP2 PWM output A.
RB4/KBI0	54			
RB4		I/O	TTL	Digital I/O.
KBI0		I	TTL	Interrupt-on-change pin.
RB5/KBI1/PGM	53			
RB5		I/O	TTL	Digital I/O.
KBI1		I	TTL	Interrupt-on-change pin.
PGM		I/O	ST	Low-Voltage ICSP™ Programming enable pin.
RB6/KBI2/PGC	52			
RB6		I/O	TTL	Digital I/O.
KBI2		I	TTL	Interrupt-on-change pin.
PGC		I/O	ST	In-Circuit Debugger and ICSP™ programming clock pin.
RB7/KBI3/PGD	47			
RB7		I/O	TTL	Digital I/O.
KBI3		I	TTL	Interrupt-on-change pin.
PGD		I/O	ST	In-Circuit Debugger and ICSP programming data pin.

Legend: TTL = TTL compatible input; CMOS = CMOS compatible input or output; ST = Schmitt Trigger input with CMOS levels; Analog = Analog input; I = Input; O = Output; P = Power; I^2C™/SMB = I^2C/SMBus input buffer

Note 1: Alternate assignment for ECCP2 when Configuration bit, CCP2MX, is cleared (all operating modes except Microcontroller mode).

2: Default assignment for ECCP2 in all operating modes (CCP2MX is set).

3: Alternate assignment for ECCP2 when CCP2MX is cleared (Microcontroller mode only).

4: Default assignment for P1B/P1C/P3B/P3C (ECCPMX is set).

5: Alternate assignment for P1B/P1C/P3B/P3C (ECCPMX is clear).

TABLE 1-4: PIC18F8527/8622/8627/8722 PINOUT I/O DESCRIPTIONS (CONTINUED)

Pin Name	Pin Number TQFP	Pin Type	Buffer Type	Description
				PORTC is a bidirectional I/O port.
RC0/T1OSO/T13CKI	36			
RC0		I/O	ST	Digital I/O.
T1OSO		O	—	Timer1 oscillator output.
T13CKI		I	ST	Timer1/Timer3 external clock input.
RC1/T1OSI/ECCP2/P2A	35			
RC1		I/O	ST	Digital I/O.
T1OSI		I	CMOS	Timer1 oscillator input.
ECCP2(2)		I/O	ST	Enhanced Capture 2 input/Compare 2 output/ PWM 2 output.
P2A(2)		O	—	ECCP2 PWM output A.
RC2/ECCP1/P1A	43			
RC2		I/O	ST	Digital I/O.
ECCP1		I/O	ST	Enhanced Capture 1 input/Compare 1 output/ PWM 1 output.
P1A		O	—	ECCP1 PWM output A.
RC3/SCK1/SCL1	44			
RC3		I/O	ST	Digital I/O.
SCK1		I/O	ST	Synchronous serial clock input/output for SPI mode.
SCL1		I/O	ST	Synchronous serial clock input/output for I^2C™ mode.
RC4/SDI1/SDA1	45			
RC4		I/O	ST	Digital I/O.
SDI1		I	ST	SPI data in.
SDA1		I/O	ST	I^2C data I/O.
RC5/SDO1	46			
RC5		I/O	ST	Digital I/O.
SDO1		O	—	SPI data out.
RC6/TX1/CK1	37			
RC6		I/O	ST	Digital I/O.
TX1		O	—	EUSART1 asynchronous transmit.
CK1		I/O	ST	EUSART1 synchronous clock (see related RX1/DT1).
RC7/RX1/DT1	38			
RC7		I/O	ST	Digital I/O.
RX1		I	ST	EUSART1 asynchronous receive.
DT1		I/O	ST	EUSART1 synchronous data (see related TX1/CK1).

Legend: TTL = TTL compatible input; CMOS = CMOS compatible input or output; ST = Schmitt Trigger input with CMOS levels; Analog = Analog input; I = Input; O = Output; P = Power; I^2C™/SMB = I^2C/SMBus input buffer

Note 1: Alternate assignment for ECCP2 when Configuration bit, CCP2MX, is cleared (all operating modes except Microcontroller mode).

2: Default assignment for ECCP2 in all operating modes (CCP2MX is set).

3: Alternate assignment for ECCP2 when CCP2MX is cleared (Microcontroller mode only).

4: Default assignment for P1B/P1C/P3B/P3C (ECCPMX is set).

5: Alternate assignment for P1B/P1C/P3B/P3C (ECCPMX is clear).

© 2008 Microchip Technology Inc.

TABLE 1-4: PIC18F8527/8622/8627/8722 PINOUT I/O DESCRIPTIONS (CONTINUED)

Pin Name	Pin Number TQFP	Pin Type	Buffer Type	Description
				PORTD is a bidirectional I/O port.
RD0/AD0/PSP0	72			
RD0		I/O	ST	Digital I/O.
AD0		I/O	TTL	External memory address/data 0.
PSP0		I/O	TTL	Parallel Slave Port data.
RD1/AD1/PSP1	69			
RD1		I/O	ST	Digital I/O.
AD1		I/O	TTL	External memory address/data 1.
PSP1		I/O	TTL	Parallel Slave Port data.
RD2/AD2/PSP2	68			
RD2		I/O	ST	Digital I/O.
AD2		I/O	TTL	External memory address/data 2.
PSP2		I/O	TTL	Parallel Slave Port data.
RD3/AD3/PSP3	67			
RD3		I/O	ST	Digital I/O.
AD3		I/O	TTL	External memory address/data 3.
PSP3		I/O	TTL	Parallel Slave Port data.
RD4/AD4/PSP4/SDO2	66			
RD4		I/O	ST	Digital I/O.
AD4		I/O	TTL	External memory address/data 4.
PSP4		I/O	TTL	Parallel Slave Port data.
SDO2		O	—	SPI data out.
RD5/AD5/PSP5/ SDI2/SDA2	65			
RD5		I/O	ST	Digital I/O.
AD5		I/O	TTL	External memory address/data 5.
PSP5		I/O	TTL	Parallel Slave Port data.
SDI2		I	ST	SPI data in.
SDA2		I/O	I^2C/SMB	I^2C™ data I/O.
RD6/AD6/PSP6/ SCK2/SCL2	64			
RD6		I/O	ST	Digital I/O.
AD6		I/O	TTL	External memory address/data 6.
PSP6		I/O	TTL	Parallel Slave Port data.
SCK2		I/O	ST	Synchronous serial clock input/output for SPI mode.
SCL2		I/O	I^2C/SMB	Synchronous serial clock input/output for I^2C mode.
RD7/AD7/PSP7/$\overline{SS2}$	63			
RD7		I/O	ST	Digital I/O.
AD7		I/O	TTL	External memory address/data 7.
PSP7		I/O	TTL	Parallel Slave Port data.
$\overline{SS2}$		I	TTL	SPI slave select input.

Legend: TTL = TTL compatible input; CMOS = CMOS compatible input or output; ST = Schmitt Trigger input with CMOS levels; Analog = Analog input; I = Input; O = Output; P = Power; I^2C™/SMB = I^2C/SMBus input buffer

Note 1: Alternate assignment for ECCP2 when Configuration bit, CCP2MX, is cleared (all operating modes except Microcontroller mode).

2: Default assignment for ECCP2 in all operating modes (CCP2MX is set).

3: Alternate assignment for ECCP2 when CCP2MX is cleared (Microcontroller mode only).

4: Default assignment for P1B/P1C/P3B/P3C (ECCPMX is set).

5: Alternate assignment for P1B/P1C/P3B/P3C (ECCPMX is clear).

TABLE 1-4: PIC18F8527/8622/8627/8722 PINOUT I/O DESCRIPTIONS (CONTINUED)

Pin Name	Pin Number TQFP	Pin Type	Buffer Type	Description
				PORTE is a bidirectional I/O port.
RE0/AD8/$\overline{RD}$/P2D	4			
RE0		I/O	ST	Digital I/O.
AD8		I/O	TTL	External memory address/data 8.
$\overline{RD}$		I	TTL	Read control for Parallel Slave Port.
P2D		O	—	ECCP2 PWM output D.
RE1/AD9/$\overline{WR}$/P2C	3			
RE1		I/O	ST	Digital I/O.
AD9		I/O	TTL	External memory address/data 9.
$\overline{WR}$		I	TTL	Write control for Parallel Slave Port.
P2C		O	—	ECCP2 PWM output C.
RE2/AD10/$\overline{CS}$/P2B	78			
RE2		I/O	ST	Digital I/O.
AD10		I/O	TTL	External memory address/data 10.
$\overline{CS}$		I	TTL	Chip select control for Parallel Slave Port.
P2B		O	—	ECCP2 PWM output B.
RE3/AD11/P3C	77			
RE3		I/O	ST	Digital I/O.
AD11		I/O	TTL	External memory address/data 11.
P3C(4)		O	—	ECCP3 PWM output C.
RE4/AD12/P3B	76			
RE4		I/O	ST	Digital I/O.
AD12		I/O	TTL	External memory address/data 12.
P3B(4)		O	—	ECCP3 PWM output B.
RE5/AD13/P1C	75			
RE5		I/O	ST	Digital I/O.
AD13		I/O	TTL	External memory address/data 13.
P1C(4)		O	—	ECCP1 PWM output C.
RE6/AD14/P1B	74			
RE6		I/O	ST	Digital I/O.
AD14		I/O	TTL	External memory address/data 14.
P1B(4)		O	—	ECCP1 PWM output B.
RE7/AD15/ECCP2/P2A	73			
RE7		I/O	ST	Digital I/O.
AD15		I/O	TTL	External memory address/data 15.
ECCP2(3)		I/O	ST	Enhanced Capture 2 input/Compare 2 output/ PWM 2 output.
P2A(3)		O	—	ECCP2 PWM output A.

Legend: TTL = TTL compatible input; CMOS = CMOS compatible input or output; ST = Schmitt Trigger input with CMOS levels; Analog = Analog input; I = Input; O = Output; P = Power; I^2C™/SMB = I^2C/SMBus input buffer

Note 1: Alternate assignment for ECCP2 when Configuration bit, CCP2MX, is cleared (all operating modes except Microcontroller mode).

2: Default assignment for ECCP2 in all operating modes (CCP2MX is set).

3: Alternate assignment for ECCP2 when CCP2MX is cleared (Microcontroller mode only).

4: Default assignment for P1B/P1C/P3B/P3C (ECCPMX is set).

5: Alternate assignment for P1B/P1C/P3B/P3C (ECCPMX is clear).

© 2008 Microchip Technology Inc.

TABLE 1-4: PIC18F8527/8622/8627/8722 PINOUT I/O DESCRIPTIONS (CONTINUED)

Pin Name	Pin Number TQFP	Pin Type	Buffer Type	Description
				PORTF is a bidirectional I/O port.
RF0/AN5	24			
RF0		I/O	ST	Digital I/O.
AN5		I	Analog	Analog input 5.
RF1/AN6/C2OUT	23			
RF1		I/O	ST	Digital I/O.
AN6		I	Analog	Analog input 6.
C2OUT		O	—	Comparator 2 output.
RF2/AN7/C1OUT	18			
RF2		I/O	ST	Digital I/O.
AN7		I	Analog	Analog input 7.
C1OUT		O	—	Comparator 1 output.
RF3/AN8	17			
RF3		I/O	ST	Digital I/O.
AN8		I	Analog	Analog input 8.
RF4/AN9	16			
RF4		I/O	ST	Digital I/O.
AN9		I	Analog	Analog input 9.
RF5/AN10/CVREF	15			
RF5		I/O	ST	Digital I/O.
AN10		I	Analog	Analog input 10.
CVREF		O	Analog	Comparator reference voltage output.
RF6/AN11	14			
RF6		I/O	ST	Digital I/O.
AN11		I	Analog	Analog input 11.
RF7/$\overline{SS1}$	13			
RF7		I/O	ST	Digital I/O.
$\overline{SS1}$		I	TTL	SPI slave select input.

Legend: TTL = TTL compatible input; CMOS = CMOS compatible input or output; ST = Schmitt Trigger input with CMOS levels; Analog = Analog input; I = Input; O = Output; P = Power; I^2C™/SMB = I^2C/SMBus input buffer

Note 1: Alternate assignment for ECCP2 when Configuration bit, CCP2MX, is cleared (all operating modes except Microcontroller mode).

2: Default assignment for ECCP2 in all operating modes (CCP2MX is set).

3: Alternate assignment for ECCP2 when CCP2MX is cleared (Microcontroller mode only).

4: Default assignment for P1B/P1C/P3B/P3C (ECCPMX is set).

5: Alternate assignment for P1B/P1C/P3B/P3C (ECCPMX is clear).

TABLE 1-4: PIC18F8527/8622/8627/8722 PINOUT I/O DESCRIPTIONS (CONTINUED)

Pin Name	Pin Number TQFP	Pin Type	Buffer Type	Description
				PORTG is a bidirectional I/O port.
RG0/ECCP3/P3A	5			
RG0		I/O	ST	Digital I/O.
ECCP3		I/O	ST	Enhanced Capture 3 input/Compare 3 output/ PWM 3 output.
P3A		O	—	ECCP3 PWM output A.
RG1/TX2/CK2	6			
RG1		I/O	ST	Digital I/O.
TX2		O	—	EUSART2 asynchronous transmit.
CK2		I/O	ST	EUSART2 synchronous clock (see related RX2/DT2).
RG2/RX2/DT2	7			
RG2		I/O	ST	Digital I/O.
RX2		I	ST	EUSART2 asynchronous receive.
DT2		I/O	ST	EUSART2 synchronous data (see related TX2/CK2).
RG3/CCP4/P3D	8			
RG3		I/O	ST	Digital I/O.
CCP4		I/O	ST	Capture 4 input/Compare 4 output/PWM 4 output.
P3D		O	—	ECCP3 PWM output D.
RG4/CCP5/P1D	10			
RG4		I/O	ST	Digital I/O.
CCP5		I/O	ST	Capture 5 input/Compare 5 output/PWM 5 output.
P1D		O	—	ECCP1 PWM output D.
RG5				See RG5/$\overline{\text{MCLR}}$/VPP pin.

Legend: TTL = TTL compatible input; CMOS = CMOS compatible input or output; ST = Schmitt Trigger input with CMOS levels; Analog = Analog input; I = Input; O = Output; P = Power; I^2C™/SMB = I^2C/SMBus input buffer

Note 1: Alternate assignment for ECCP2 when Configuration bit, CCP2MX, is cleared (all operating modes except Microcontroller mode).

2: Default assignment for ECCP2 in all operating modes (CCP2MX is set).

3: Alternate assignment for ECCP2 when CCP2MX is cleared (Microcontroller mode only).

4: Default assignment for P1B/P1C/P3B/P3C (ECCPMX is set).

5: Alternate assignment for P1B/P1C/P3B/P3C (ECCPMX is clear).

© 2008 Microchip Technology Inc.

TABLE 1-4: PIC18F8527/8622/8627/8722 PINOUT I/O DESCRIPTIONS (CONTINUED)

Pin Name	Pin Number TQFP	Pin Type	Buffer Type	Description
				PORTH is a bidirectional I/O port.
RH0/A16	79			
RH0		I/O	ST	Digital I/O.
A16		I/O	TTL	External memory address/data 16.
RH1/A17	80			
RH1		I/O	ST	Digital I/O.
A17		I/O	TTL	External memory address/data 17.
RH2/A18	1			
RH2		I/O	ST	Digital I/O.
A18		I/O	TTL	External memory address/data 18.
RH3/A19	2			
RH3		I/O	ST	Digital I/O.
A19		I/O	TTL	External memory address/data 19.
RH4/AN12/P3C	22			
RH4		I/O	ST	Digital I/O.
AN12		I	Analog	Analog input 12.
P3C(5)		O	—	ECCP3 PWM output C.
RH5/AN13/P3B	21			
RH5		I/O	ST	Digital I/O.
AN13		I	Analog	Analog input 13.
P3B(5)		O	—	ECCP3 PWM output B.
RH6/AN14/P1C	20			
RH6		I/O	ST	Digital I/O.
AN14		I	Analog	Analog input 14.
P1C(5)		O	—	ECCP1 PWM output C.
RH7/AN15/P1B	19			
RH7		I/O	ST	Digital I/O.
AN15		I	Analog	Analog input 15.
P1B(5)		O	—	ECCP1 PWM output B.

Legend: TTL = TTL compatible input; CMOS = CMOS compatible input or output; ST = Schmitt Trigger input with CMOS levels; Analog = Analog input; I = Input; O = Output; P = Power; I^2C™/SMB = I^2C/SMBus input buffer

Note 1: Alternate assignment for ECCP2 when Configuration bit, CCP2MX, is cleared (all operating modes except Microcontroller mode).

2: Default assignment for ECCP2 in all operating modes (CCP2MX is set).

3: Alternate assignment for ECCP2 when CCP2MX is cleared (Microcontroller mode only).

4: Default assignment for P1B/P1C/P3B/P3C (ECCPMX is set).

5: Alternate assignment for P1B/P1C/P3B/P3C (ECCPMX is clear).

TABLE 1-4: PIC18F8527/8622/8627/8722 PINOUT I/O DESCRIPTIONS (CONTINUED)

Pin Name	Pin Number TQFP	Pin Type	Buffer Type	Description
				PORTJ is a bidirectional I/O port.
RJ0/ALE	62			
RJ0		I/O	ST	Digital I/O.
ALE		O	—	External memory address latch enable.
RJ1/$\overline{OE}$	61			
RJ1		I/O	ST	Digital I/O.
$\overline{OE}$		O	—	External memory output enable.
RJ2/$\overline{WRL}$	60			
RJ2		I/O	ST	Digital I/O.
$\overline{WRL}$		O	—	External memory write low control.
RJ3/$\overline{WRH}$	59			
RJ3		I/O	ST	Digital I/O.
$\overline{WRH}$		O	—	External memory write high control.
RJ4/BA0	39			
RJ4		I/O	ST	Digital I/O.
BA0		O	—	External memory byte address 0 control.
RJ5/$\overline{CE}$	40			
RJ4		I/O	ST	Digital I/O
$\overline{CE}$		O	—	External memory chip enable control.
RJ6/$\overline{LB}$	41			
RJ6		I/O	ST	Digital I/O.
$\overline{LB}$		O	—	External memory low byte control.
RJ7/$\overline{UB}$	42			
RJ7		I/O	ST	Digital I/O.
$\overline{UB}$		O	—	External memory high byte control.
VSS	11, 31, 51, 70	P	—	Ground reference for logic and I/O pins.
VDD	12, 32, 48, 71	P	—	Positive supply for logic and I/O pins.
AVSS	26	P	—	Ground reference for analog modules.
AVDD	25	P	—	Positive supply for analog modules.

Legend: TTL = TTL compatible input; CMOS = CMOS compatible input or output; ST = Schmitt Trigger input with CMOS levels; Analog = Analog input; I = Input; O = Output; P = Power; I^2C™/SMB = I^2C/SMBus input buffer

Note 1: Alternate assignment for ECCP2 when Configuration bit, CCP2MX, is cleared (all operating modes except Microcontroller mode).

2: Default assignment for ECCP2 in all operating modes (CCP2MX is set).

3: Alternate assignment for ECCP2 when CCP2MX is cleared (Microcontroller mode only).

4: Default assignment for P1B/P1C/P3B/P3C (ECCPMX is set).

5: Alternate assignment for P1B/P1C/P3B/P3C (ECCPMX is clear).

© 2008 Microchip Technology Inc.

2.0 OSCILLATOR CONFIGURATIONS

2.1 Oscillator Types

The PIC18F8722 family of devices can be operated in ten different oscillator modes. The user can program the Configuration bits, FOSC<3:0>, in Configuration Register 1H to select one of these ten modes:

1. LP Low-Power Crystal
2. XT Crystal/Resonator
3. HS High-Speed Crystal/Resonator
4. HSPLL High-Speed Crystal/Resonator with PLL enabled
5. RC External Resistor/Capacitor with FOSC/4 output on RA6
6. RCIO External Resistor/Capacitor with I/O on RA6
7. INTIO1 Internal Oscillator with FOSC/4 output on RA6 and I/O on RA7
8. INTIO2 Internal Oscillator with I/O on RA6 and RA7
9. EC External Clock with FOSC/4 output
10. ECIO External Clock with I/O on RA6

2.2 Crystal Oscillator/Ceramic Resonators

In XT, LP, HS or HSPLL Oscillator modes, a crystal or ceramic resonator is connected to the OSC1 and OSC2 pins to establish oscillation. Figure 2-1 shows the pin connections.

The oscillator design requires the use of a parallel cut crystal.

Note: Use of a series cut crystal may give a frequency out of the crystal manufacturer's specifications.

FIGURE 2-1: CRYSTAL/CERAMIC RESONATOR OPERATION (XT, LP, HS OR HSPLL CONFIGURATION)

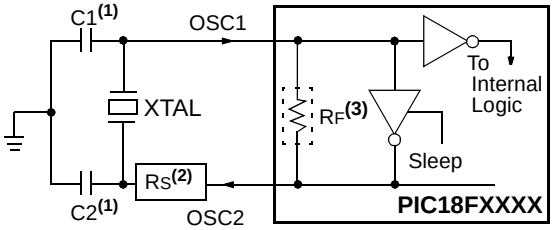

Note 1: See Table 2-1 and Table 2-2 for initial values of C1 and C2.

2: A series resistor (RS) may be required for AT strip cut crystals.

3: RF varies with the oscillator mode chosen.

TABLE 2-1: CAPACITOR SELECTION FOR CERAMIC RESONATORS

Typical Capacitor Values Used:			
Mode	**Freq**	**OSC1**	**OSC2**
XT	3.58 MHz	22 pF	22 pF

Capacitor values are for design guidance only.

Different capacitor values may be required to produce acceptable oscillator operation. The user should test the performance of the oscillator over the expected VDD and temperature range for the application. Refer to the following application notes for oscillator specific information:

- AN588 – PIC® Microcontroller Oscillator Design Guide
- AN826 – Crystal Oscillator Basics and Crystal Selection for rfPIC® and PIC® Devices
- AN849 – Basic PIC® Oscillator Design
- AN943 – Practical PIC® Oscillator Analysis and Design
- AN949 – Making Your Oscillator Work

See the notes following Table 2-2 for additional information.

Note: When using resonators with frequencies above 3.5 MHz, the use of HS mode, rather than XT mode, is recommended. HS mode may be used at any VDD for which the controller is rated. If HS is selected, it is possible that the gain of the oscillator will overdrive the resonator. Therefore, a series resistor may be placed between the OSC2 pin and the resonator. As a good starting point, the recommended value of RS is 330Ω.

TABLE 2-2: CAPACITOR SELECTION FOR QUARTZ CRYSTALS

Osc Type	Crystal Freq	Typical Capacitor Values Tested:	
		C1	C2
LP	32 kHz	22 pF	22 pF
XT	1 MHz 4 MHz	22 pF 22 pF	22 pF 22 pF
HS	4 MHz 10 MHz 20 MHz 25 MHz	22 pF 22 pF 22 pF 22 pF	22 pF 22 pF 22 pF 22 pF

Capacitor values are for design guidance only.

Different capacitor values may be required to produce acceptable oscillator operation. The user should test the performance of the oscillator over the expected VDD and temperature range for the application. Refer to the following application notes for oscillator specific information:

- AN588 – PIC® Microcontroller Oscillator Design Guide
- AN826 – Crystal Oscillator Basics and Crystal Selection for rfPIC® and PIC® Devices
- AN849 – Basic PIC® Oscillator Design
- AN943 – Practical PIC® Oscillator Analysis and Design
- AN949 – Making Your Oscillator Work

See the notes following this table for additional information.

Note 1: Higher capacitance increases the stability of the oscillator but also increases the start-up time.

2: When operating below 3V VDD, or when using certain ceramic resonators at any voltage, it may be necessary to use the HS mode or switch to a crystal oscillator.

3: Since each resonator/crystal has its own characteristics, the user should consult the resonator/crystal manufacturer for appropriate values of external components.

4: Rs may be required to avoid overdriving crystals with low drive level specification.

5: Always verify oscillator performance over the VDD and temperature range that is expected for the application.

An external clock source may also be connected to the OSC1 pin in the HS mode, as shown in Figure 2-2. When operated in this mode, parameters D033 and D043 apply.

FIGURE 2-2: EXTERNAL CLOCK INPUT OPERATION (HS OSC CONFIGURATION)

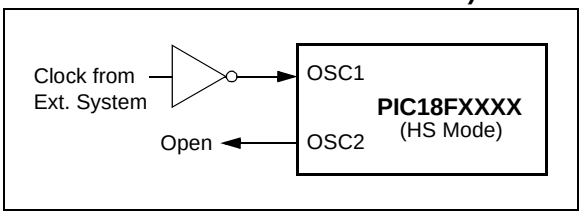

2.3 External Clock Input

The EC and ECIO Oscillator modes require an external clock source to be connected to the OSC1 pin. There is no oscillator start-up time required after a Power-on Reset or after an exit from Sleep mode.

In the EC Oscillator mode, the oscillator frequency divided by 4 is available on the OSC2 pin. This signal may be used for test purposes or to synchronize other logic. Figure 2-3 shows the pin connections for the EC Oscillator mode.

FIGURE 2-3: EXTERNAL CLOCK INPUT OPERATION (EC CONFIGURATION)

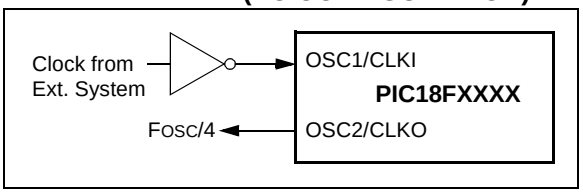

The ECIO Oscillator mode functions like the EC mode, except that the OSC2 pin becomes an additional general purpose I/O pin. The I/O pin becomes bit 6 of PORTA (RA6). Figure 2-4 shows the pin connections for the ECIO Oscillator mode. When operated in this mode, parameters D033A and D043A apply.

FIGURE 2-4: EXTERNAL CLOCK INPUT OPERATION (ECIO CONFIGURATION)

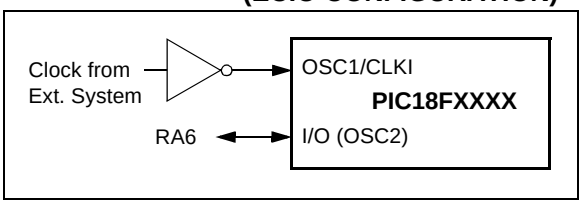

© 2008 Microchip Technology Inc.

2.4 RC Oscillator

For timing insensitive applications, the RC and RCIO Oscillator modes offer additional cost savings. The actual oscillator frequency is a function of several factors:

- supply voltage
- values of the external resistor (REXT) and capacitor (CEXT)
- operating temperature

Given the same device, operating voltage and temperature and component values, there will also be unit-to-unit frequency variations. These are due to factors such as:

- normal manufacturing variation
- difference in lead frame capacitance between package types (especially for low CEXT values)
- variations within the tolerance of limits of REXT and CEXT

In the RC Oscillator mode, the oscillator frequency divided by 4 is available on the OSC2 pin. This signal may be used for test purposes or to synchronize other logic. Figure 2-5 shows how the R/C combination is connected.

FIGURE 2-5: RC OSCILLATOR MODE

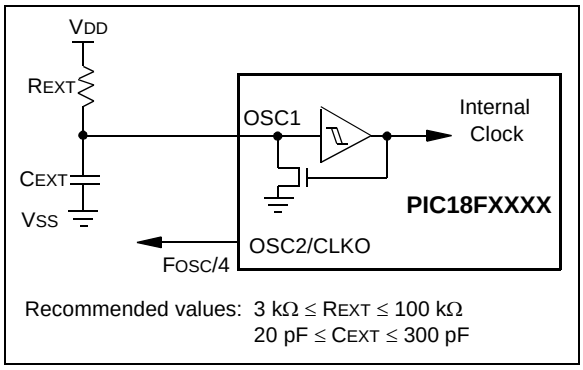

The RCIO Oscillator mode (Figure 2-6) functions like the RC mode, except that the OSC2 pin becomes an additional general purpose I/O pin. The I/O pin becomes bit 6 of PORTA (RA6).

FIGURE 2-6: RCIO OSCILLATOR MODE

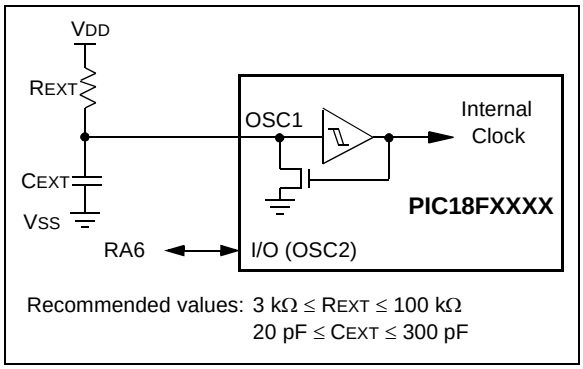

2.5 PLL Frequency Multiplier

A Phase Locked Loop (PLL) circuit is provided as an option for users who wish to use a lower frequency oscillator circuit or to clock the device up to its highest rated frequency from a crystal oscillator. This may be useful for customers who are concerned with EMI due to high-frequency crystals or users who require higher clock speeds from an internal oscillator.

2.5.1 HSPLL OSCILLATOR MODE

The HSPLL mode makes use of the HS mode oscillator for frequencies up to 10 MHz. A PLL then multiplies the oscillator output frequency by 4 to produce an internal clock frequency up to 40 MHz. The PLLEN bit is not available when this mode is configured as the primary clock source.

The PLL is only available to the crystal oscillator when the FOSC<3:0> Configuration bits are programmed for HSPLL mode (= `0110`).

FIGURE 2-7: HSPLL BLOCK DIAGRAM

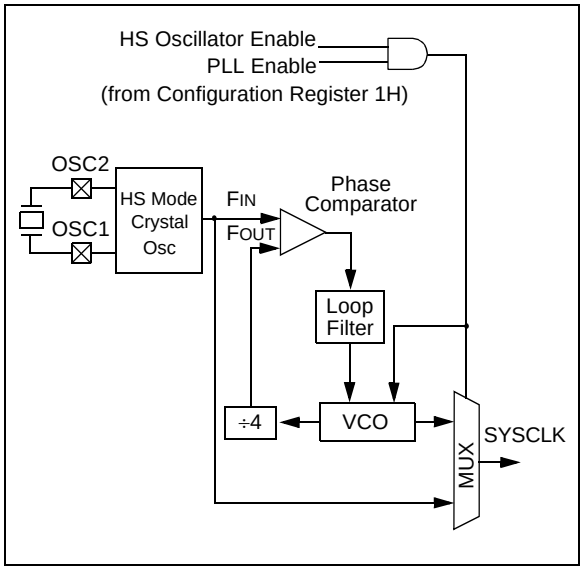

2.5.2 PLL AND INTOSC

The PLL is also available to the internal oscillator block when the internal oscillator block is configured as the primary clock source. In this configuration, the PLL is enabled in software and generates a clock output of up to 32 MHz. The operation of INTOSC with the PLL is described in **Section 2.6.4 “PLL in INTOSC Modes”**.

2.6 Internal Oscillator Block

The PIC18F8722 family of devices includes an internal oscillator block which generates two different clock signals; either can be used as the microcontroller's clock source. This may eliminate the need for external oscillator circuits on the OSC1 and/or OSC2 pins.

The main output (INTOSC) is an 8 MHz clock source, which can be used to directly drive the device clock. It also drives a postscaler, which can provide a range of clock frequencies from 31 kHz to 4 MHz. The INTOSC output is enabled when a clock frequency from 125 kHz to 8 MHz is selected. The INTOSC output can also be enabled when 31 kHz is selected, depending on the INTSRC bit (OSCTUNE<7>).

The other clock source is the internal RC oscillator (INTRC), which provides a nominal 31 kHz output. INTRC is enabled if it is selected as the device clock source; it is also enabled automatically when any of the following are enabled:

- Power-up Timer
- Fail-Safe Clock Monitor
- Watchdog Timer
- Two-Speed Start-up

These features are discussed in greater detail in **Section 25.0 "Special Features of the CPU"**.

The clock source frequency (INTOSC direct, INTRC direct or INTOSC postscaler) is selected by configuring the IRCF bits of the OSCCON register (page 39).

2.6.1 INTIO MODES

Using the internal oscillator as the clock source eliminates the need for up to two external oscillator pins, which can then be used for digital I/O. Two distinct configurations are available:

- In INTIO1 mode, the OSC2 pin outputs FOSC/4, while OSC1 functions as RA7 (see Figure 2-8) for digital input and output.
- In INTIO2 mode, OSC1 functions as RA7 and OSC2 functions as RA6 (see Figure 2-9), both for digital input and output.

FIGURE 2-8: INTIO1 OSCILLATOR MODE

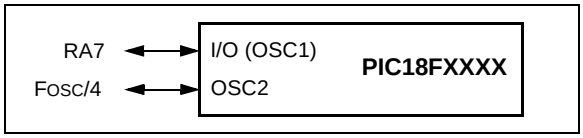

FIGURE 2-9: INTIO2 OSCILLATOR MODE

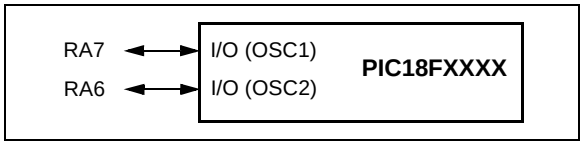

2.6.2 INTOSC OUTPUT FREQUENCY

The internal oscillator block is calibrated at the factory to produce an INTOSC output frequency of 8 MHz.

The INTRC oscillator operates independently of the INTOSC source. Any changes in INTOSC across voltage and temperature are not necessarily reflected by changes in INTRC or vice versa.

2.6.3 OSCTUNE REGISTER

The INTOSC output has been calibrated at the factory but can be adjusted in the user's application. This is done by writing to TUN<4:0> (OSCTUNE<4:0>) in the OSCTUNE register (Register).

When the OSCTUNE register is modified, the INTOSC frequency will begin shifting to the new frequency. The INTOSC clock will stabilize within 1 ms. Code execution continues during this shift. There is no indication that the shift has occurred. The INTRC is not affected by OSCTUNE.

The OSCTUNE register also implements the INTSRC (OSCTUNE<7>) and PLLEN (OSCTUNE<6>) bits, which control certain features of the internal oscillator block. The INTSRC bit allows users to select which internal oscillator provides the clock source when the 31 kHz frequency option is selected. This is covered in greater detail in **Section 2.7.1 "Oscillator Control Register"**.

The PLLEN bit controls the operation of the Phase Locked Loop (PLL) in internal oscillator modes (see Figure 2-10).

FIGURE 2-10: INTOSC AND PLL BLOCK DIAGRAM

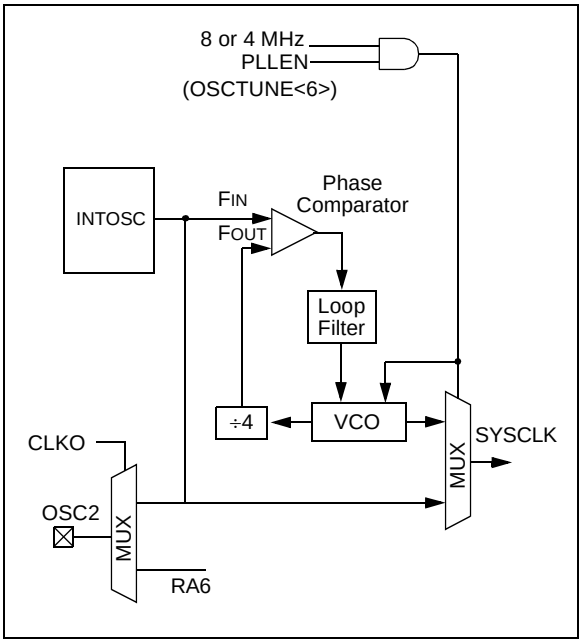

© 2008 Microchip Technology Inc.

2.6.4 PLL IN INTOSC MODES

The 4x Phase Locked Loop (PLL) can be used with the internal oscillator block to produce faster device clock speeds than are normally possible with the internal oscillator sources. When enabled, the PLL produces a clock speed of 16 MHz or 32 MHz.

Unlike HSPLL mode, the PLL is controlled through software. The control bit, PLLEN (OSCTUNE<6>), is used to enable or disable its operation.

The PLL is available when the device is configured to use the internal oscillator block as its primary clock source (FOSC<3:0> = 1001 or 1000). Additionally, the PLL will only function when the selected output frequency is either 4 MHz or 8 MHz (OSCCON<6:4> = 111 or 110). If both of these conditions are not met, the PLL is disabled and the PLLEN bit remains clear (writes are ignored).

2.6.5 INTOSC FREQUENCY DRIFT

The factory calibrates the internal oscillator block output (INTOSC) for 8 MHz. However, this frequency may drift as VDD or temperature changes and can affect the controller operation in a variety of ways. It is possible to adjust the INTOSC frequency by modifying the value in the OSCTUNE register. Depending on the device, this may have no effect on the INTRC clock source frequency.

Tuning the INTOSC source requires knowing when to make the adjustment, in which direction it should be made and in some cases, how large a change is needed. Three compensation techniques are discussed in **Section 2.6.5.1 “Compensating with the EUSART”**, **Section 2.6.5.2 “Compensating with the Timers”** and **Section 2.6.5.3 “Compensating with the CCP Module in Capture Mode”** but other techniques may be used.

REGISTER 2-1: OSCTUNE: OSCILLATOR TUNING REGISTER

R/W-0	R/W-0	U-0	R/W-0	R/W-0	R/W-0	R/W-0	R/W-0
INTSRC	PLLEN(1)	—	TUN4	TUN3	TUN2	TUN1	TUN0
bit 7							bit 0

Legend:			
R = Readable bit	W = Writable bit	U = Unimplemented bit, read as ‘0’	
-n = Value at POR	‘1’ = Bit is set	‘0’ = Bit is cleared	x = Bit is unknown

bit 7 **INTSRC:** Internal Oscillator Low-Frequency Source Select bit
1 = 31.25 kHz device clock derived from 8 MHz INTOSC source (divide-by-256 enabled)
0 = 31 kHz device clock derived directly from INTRC internal oscillator

bit 6 **PLLEN:** Frequency Multiplier PLL for INTOSC Enable bit(1)
1 = PLL enabled for INTOSC (4 MHz and 8 MHz only)
0 = PLL disabled

bit 5 **Unimplemented:** Read as ‘0’

bit 4-0 **TUN<4:0>:** Frequency Tuning bits
01111 = Maximum frequency
•
•
00001
00000 = Center frequency. Oscillator module is running at the calibrated frequency.
11111
•
•
10000 = Minimum frequency

Note 1: Available only in certain oscillator configurations; otherwise, this bit is unavailable and reads as ‘0’. See **Section 2.6.4 “PLL in INTOSC Modes”** for details.

2.6.5.1 Compensating with the EUSART

An adjustment may be required when the EUSART begins to generate framing errors or receives data with errors while in Asynchronous mode. Framing errors indicate that the device clock frequency is too high. To adjust for this, decrement the value in OSCTUNE to reduce the clock frequency. On the other hand, errors in data may suggest that the clock speed is too low. To compensate, increment OSCTUNE to increase the clock frequency.

2.6.5.2 Compensating with the Timers

This technique compares device clock speed to some reference clock. Two timers may be used; one timer is clocked by the peripheral clock, while the other is clocked by a fixed reference source, such as the Timer1 oscillator.

Both timers are cleared, but the timer clocked by the reference generates interrupts. When an interrupt occurs, the internally clocked timer is read and both timers are cleared. If the internally clocked timer value is much greater than expected, then the internal oscillator block is running too fast. To adjust for this, decrement the OSCTUNE register.

2.6.5.3 Compensating with the CCP Module in Capture Mode

A CCP module can use free running Timer1 (or Timer3), clocked by the internal oscillator block and an external event with a known period (i.e., AC power frequency). The time of the first event is captured in the CCPRxH:CCPRxL registers and is recorded for use later. When the second event causes a capture, the time of the first event is subtracted from the time of the second event. Since the period of the external event is known, the time difference between events can be calculated.

If the measured time is much greater than the calculated time, the internal oscillator block is running too fast. To compensate, decrement the OSCTUNE register. If the measured time is much less than the calculated time, the internal oscillator block is running too slow. To compensate, increment the OSCTUNE register.

© 2008 Microchip Technology Inc.

2.7 Clock Sources and Oscillator Switching

The PIC18F8722 family of devices includes a feature that allows the device clock source to be switched from the main oscillator to an alternate clock source. These devices also offer two alternate clock sources. When an alternate clock source is enabled, the various power-managed operating modes are available.

Essentially, there are three clock sources for these devices:

- Primary oscillators
- Secondary oscillators
- Internal oscillator block

The **primary oscillators** include the External Crystal and Resonator modes, the External RC modes, the External Clock modes and the internal oscillator block. The particular mode is defined by the FOSC<3:0> Configuration bits. The details of these modes are covered earlier in this chapter.

The **secondary oscillators** are those external sources not connected to the OSC1 or OSC2 pins. These sources may continue to operate even after the controller is placed in a power-managed mode.

The PIC18F8722 family of devices offers the Timer1 oscillator as a secondary oscillator. This oscillator, in all power-managed modes, is often the time base for functions such as a real-time clock.

Most often, a 32.768 kHz watch crystal is connected between the RC0/T1OSO/T13CKI and RC1/T1OSI pins. Like the LP mode oscillator circuit, loading capacitors are also connected from each pin to ground.

The Timer1 oscillator is discussed in greater detail in **Section 13.3 “Timer1 Oscillator”**.

In addition to being a primary clock source, the **internal oscillator block** is available as a power-managed mode clock source. The INTRC source is also used as the clock source for several special features, such as the WDT and Fail-Safe Clock Monitor.

The clock sources for the PIC18F8722 family of devices are shown in Figure 2-11. See **Section 25.0 “Special Features of the CPU”** for Configuration register details.

FIGURE 2-11: PIC18F8722 FAMILY CLOCK DIAGRAM

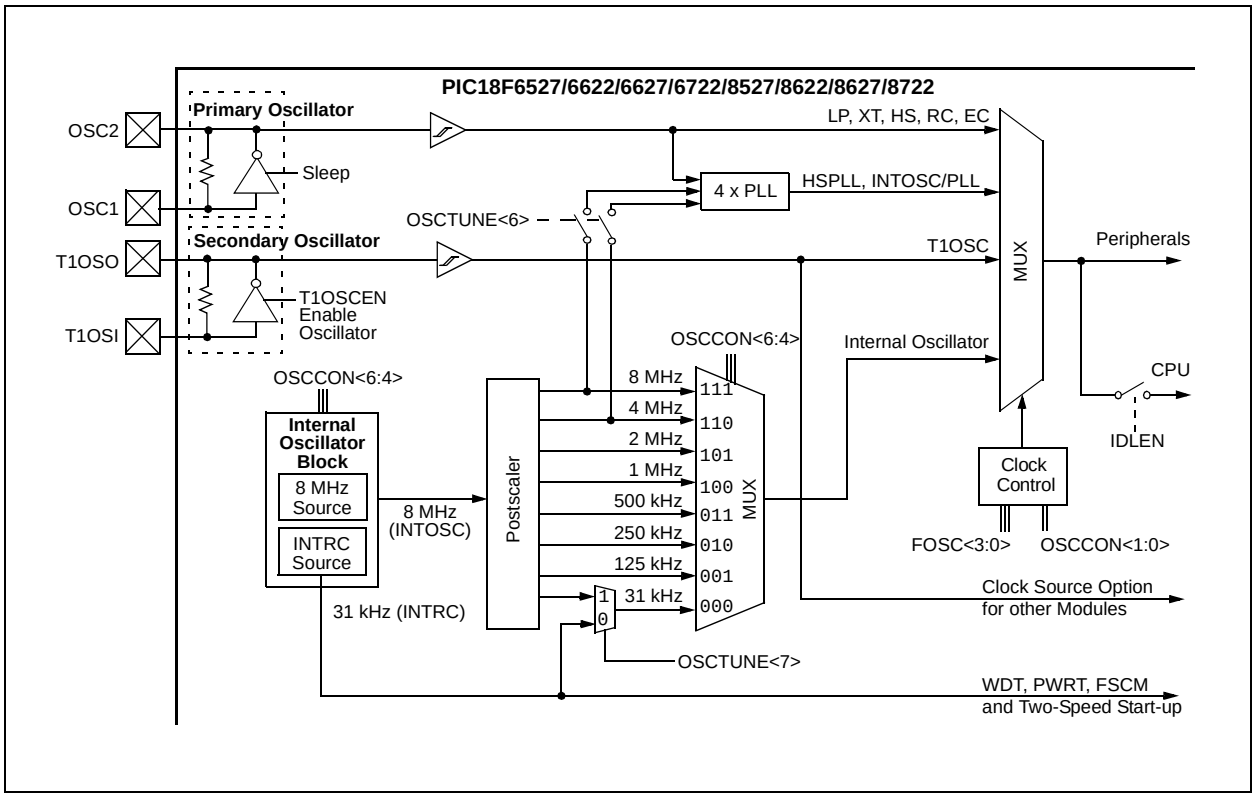

2.7.1 OSCILLATOR CONTROL REGISTER

The OSCCON register (Register 2-2) controls several aspects of the device clock's operation, both in full power operation and in power-managed modes.

The System Clock Select bits, SCS<1:0>, select the clock source. The available clock sources are the primary clock (defined by the FOSC<3:0> Configuration bits), the secondary clock (Timer1 oscillator) and the internal oscillator block. The clock source changes immediately after either of the SCS<1:0> bits are changed, following a brief clock transition interval. The SCS bits are reset on all forms of Reset.

The Internal Oscillator Frequency Select bits (IRCF<2:0>) select the frequency output of the internal oscillator block to drive the device clock. The choices are the INTRC source (31 kHz), the INTOSC source (8 MHz) or one of the frequencies derived from the INTOSC postscaler (31.25 kHz to 4 MHz). If the internal oscillator block is supplying the device clock, changing the states of these bits will have an immediate change on the internal oscillator's output. On device Resets, the default output frequency of the internal oscillator block is set at 1 MHz.

When a nominal output frequency of 31 kHz is selected (IRCF<2:0> = `000`), users may choose which internal oscillator acts as the source. This is done with the INTSRC bit in the OSCTUNE register (OSCTUNE<7>). Setting this bit selects INTOSC as a 31.25 kHz clock source derived from the INTOSC postscaler. Clearing INTSRC selects INTRC (nominally 31 kHz) as the clock source and disables the INTOSC to reduce current consumption.

This option allows users to select the tunable and more precise INTOSC as a clock source, while maintaining power savings with a very low clock speed. Additionally, the INTOSC source will already be stable should a switch to a higher frequency be needed quickly. Regardless of the setting of INTSRC, INTRC always remains the clock source for features such as the Watchdog Timer and the Fail-Safe Clock Monitor.

The OSTS, IOFS and T1RUN bits indicate which clock source is currently providing the device clock. The OSTS bit indicates that the Oscillator Start-up Timer and PLL Start-up Timer (if enabled) have timed out and the primary clock is providing the device clock in primary clock modes. The IOFS bit indicates when the internal oscillator block has stabilized and is providing the device clock in RC Clock modes. The T1RUN bit (T1CON<6>) indicates when the Timer1 oscillator is providing the device clock in secondary clock modes. In power-managed modes, only one of these three bits will be set at any time. If none of these bits are set, the INTRC is providing the clock or the internal oscillator block has just started and is not yet stable.

The IDLEN bit controls whether the device goes into Sleep mode or one of the Idle modes when the `SLEEP` instruction is executed.

The use of the flag and control bits in the OSCCON register is discussed in more detail in **Section 3.0 "Power-Managed Modes"**.

Note 1:	The Timer1 oscillator must be enabled to select the secondary clock source. The Timer1 oscillator is enabled by setting the T1OSCEN bit in the Timer1 Control register (T1CON<3>). If the Timer1 oscillator is not enabled, then any attempt to select a secondary clock source will be ignored.
2:	It is recommended that the Timer1 oscillator be operating and stable before selecting the secondary clock source or a very long delay may occur while the Timer1 oscillator starts.

2.7.2 OSCILLATOR TRANSITIONS

The PIC18F8722 family of devices contains circuitry to prevent clock "glitches" when switching between clock sources. A short pause in the device clock occurs during the clock switch. The length of this pause is the sum of two cycles of the old clock source and three to four cycles of the new clock source. This formula assumes that the new clock source is stable.

Clock transitions are discussed in greater detail in **Section 3.1.2 "Entering Power-Managed Modes"**.

© 2008 Microchip Technology Inc.

REGISTER 2-2: OSCCON: OSCILLATOR CONTROL REGISTER

R/W-0	R/W-1	R/W-0	R/W-0	R[1]	R-0	R/W-0	R/W-0
IDLEN	IRCF2	IRCF1	IRCF0	OSTS	IOFS	SCS1	SCS0
bit 7							bit 0

Legend:			
R = Readable bit	W = Writable bit	U = Unimplemented bit, read as ‘0’	
-n = Value at POR	‘1’ = Bit is set	‘0’ = Bit is cleared	x = Bit is unknown

bit 7 **IDLEN:** Idle Enable bit
1 = Device enters an Idle mode when a SLEEP instruction is executed
0 = Device enters Sleep mode when a SLEEP instruction is executed

bit 6-4 **IRCF<2:0>:** Internal Oscillator Frequency Select bits[5]
111 = 8 MHz (INTOSC drives clock directly)
110 = 4 MHz
101 = 2 MHz
100 = 1 MHz[3]
011 = 500 kHz
010 = 250 kHz
001 = 125 kHz
000 = 31 kHz (from either INTOSC/256 or INTRC directly)[2]

bit 3 **OSTS:** Oscillator Start-up Time-out Status bit[1]
1 = Oscillator Start-up Timer (OST) time-out has expired; primary oscillator is running
0 = Oscillator Start-up Timer (OST) time-out is running; primary oscillator is not ready

bit 2 **IOFS:** INTOSC Frequency Stable bit
1 = INTOSC frequency is stable
0 = INTOSC frequency is not stable

bit 1-0 **SCS<1:0>:** System Clock Select bits[4]
1x = Internal oscillator block
01 = Secondary (Timer1) oscillator
00 = Primary oscillator

Note 1: Reset state depends on state of the IESO Configuration bit.
2: Source selected by the INTSRC bit (OSCTUNE<7>), see text.
3: Default output frequency of INTOSC on Reset.
4: Modifying the SCS<1:0> bits will cause an immediate clock source switch.
5: Modifying the IRCF<3:0> bits will cause an immediate clock frequency switch if the internal oscillator is providing the device clocks.

2.8 Effects of Power-Managed Modes on the Various Clock Sources

When PRI_IDLE mode is selected, the configured oscillator continues to run without interruption. For all other power-managed modes, the oscillator using the OSC1 pin is disabled. The OSC1 pin (and OSC2 pin in crystal oscillator modes) will stop oscillating.

In secondary clock modes (SEC_RUN and SEC_IDLE), the Timer1 oscillator is operating and providing the device clock. The Timer1 oscillator may also run in all power-managed modes if required to clock Timer1 or Timer3.

In internal oscillator modes (RC_RUN and RC_IDLE), the internal oscillator block provides the device clock source. The 31 kHz INTRC output can be used directly to provide the clock and may be enabled to support various special features, regardless of the power-managed mode (see **Section 25.2 “Watchdog Timer (WDT)”** and **Section 25.4 “Fail-Safe Clock Monitor”** for more information). The INTOSC output at 8 MHz may be used directly to clock the device or may be divided down by the postscaler. The INTOSC output is disabled if the clock is provided directly from the INTRC output. The INTOSC output is also enabled for Two-Speed Start-up at 1 MHz after Resets and when configured for wake from Sleep mode.

If the Sleep mode is selected, all clock sources are stopped. Since all the transistor switching currents have been stopped, Sleep mode achieves the lowest current consumption of the device (only leakage currents).

Enabling any on-chip feature that will operate during Sleep will increase the current consumed during Sleep. The INTRC is required to support WDT operation. The Timer1 oscillator may be operating to support a real-time clock. Other features may be operating that do not require a device clock source (i.e., SSP slave, PSP, INTx pins and others). Peripherals that may add significant current consumption are listed in **Section 28.2 “DC Characteristics”.**

2.9 Power-up Delays

Power-up delays are controlled by two or three timers, so that no external Reset circuitry is required for most applications. The delays ensure that the device is kept in Reset until the device power supply is stable under normal circumstances and the primary clock is operating and stable. For additional information on power-up delays, see **Section 4.5 “Device Reset Timers”**.

The first timer is the Power-up Timer (PWRT) which provides a fixed delay on power-up (parameter 33, Table 28-12). It is enabled by clearing (= 0) the $\overline{\text{PWRTEN}}$ Configuration bit (CONFIG2L<0>).

2.9.1 DELAYS FOR POWER-UP AND RETURN TO PRIMARY CLOCK

The second timer is the Oscillator Start-up Timer (OST), intended to delay execution until the crystal oscillator is stable (LP, XT and HS modes). The OST does this by counting 1024 oscillator cycles before allowing the oscillator to clock the device.

When the HSPLL Oscillator mode is selected, a third timer delays execution for an additional 2 ms following the HS mode OST delay, so the PLL can lock to the incoming clock frequency. At the end of these delays, the OSTS bit (OSCCON<3>) is set.

There is a delay of interval T_{CSD} (parameter 38, Table 28-12), once execution is allowed to start, when the controller becomes ready to execute instructions. This delay runs concurrently with any other delays. This may be the only delay that occurs when any of the EC, RC or INTIO modes are used as the primary clock source.

TABLE 2-3: OSC1 AND OSC2 PIN STATES IN SLEEP MODE

OSC Mode	OSC1 Pin	OSC2 Pin
RC, INTIO1	Floating, external resistor pulls high	At logic low (clock/4 output)
RCIO	Floating, external resistor pulls high	Configured as PORTA, bit 6
INTIO2	Configured as PORTA, bit 7	Configured as PORTA, bit 6
ECIO	Floating, driven by external clock	Configured as PORTA, bit 6
EC	Floating, driven by external clock	At logic low (clock/4 output)
LP, XT and HS	Feedback inverter disabled at quiescent voltage level	Feedback inverter disabled at quiescent voltage level

Note: See Table 4-2 in **Section 4.0 “Reset”** for time-outs due to Sleep and $\overline{\text{MCLR}}$ Reset.

© 2008 Microchip Technology Inc.

3.0 POWER-MANAGED MODES

The PIC18F8722 family of devices offers a total of seven operating modes for more efficient power management. These modes provide a variety of options for selective power conservation in applications where resources may be limited (i.e., battery-powered devices).

There are three categories of power-managed modes:

- Run modes
- Idle modes
- Sleep mode

These categories define which portions of the device are clocked and sometimes, what speed. The Run and Idle modes may use any of the three available clock sources (primary, secondary or internal oscillator block); the Sleep mode does not use a clock source.

The power-managed modes include several power-saving features offered on previous PIC® devices. One is the clock switching feature, offered in other PIC18 devices, allowing the controller to use the Timer1 oscillator in place of the primary oscillator. Also included is the Sleep mode, offered by all PIC devices, where all device clocks are stopped.

3.1 Selecting Power-Managed Modes

Selecting a power-managed mode requires two decisions: if the CPU is to be clocked or not and the selection of a clock source. The IDLEN bit (OSCCON<7>) controls CPU clocking, while the SCS<1:0> bits (OSCCON<1:0>) select the clock source. The individual modes, bit settings, clock sources and affected modules are summarized in Table 3-1.

3.1.1 CLOCK SOURCES

The SCS1:SCS0 bits allow the selection of one of three clock sources for power-managed modes. They are:

- the primary clock, as defined by the FOSC<3:0> Configuration bits
- the secondary clock (the Timer1 oscillator)
- the internal oscillator block (for INTOSC modes)

3.1.2 ENTERING POWER-MANAGED MODES

Switching from one power-managed mode to another begins by loading the OSCCON register. The SCS<1:0> bits select the clock source and determine which Run or Idle mode is to be used. Changing these bits causes an immediate switch to the new clock source, assuming that it is running. The switch may also be subject to clock transition delays. These are discussed in **Section 3.1.3 “Clock Transitions and Status Indicators”** and subsequent sections.

Entry to the power-managed Idle or Sleep modes is triggered by the execution of a SLEEP instruction. The actual mode that results depends on the status of the IDLEN bit.

Depending on the current mode and the mode being switched to, a change to a power-managed mode does not always require setting all of these bits. Many transitions may be done by changing the oscillator select bits, or changing the IDLEN bit, prior to issuing a SLEEP instruction. If the IDLEN bit is already configured correctly, it may only be necessary to perform a SLEEP instruction to switch to the desired mode.

TABLE 3-1: POWER-MANAGED MODES

Mode	OSCCON Bits		Module Clocking		Available Clock and Oscillator Source
	IDLEN<7>(1)	SCS<1:0>	CPU	Peripherals	
Sleep	0	N/A	Off	Off	None – All clocks are disabled
PRI_RUN	N/A	00	Clocked	Clocked	Primary – LP, XT, HS, HSPLL, RC, EC and Internal Oscillator Block(2). This is the normal full power execution mode.
SEC_RUN	N/A	01	Clocked	Clocked	Secondary – Timer1 Oscillator
RC_RUN	N/A	1x	Clocked	Clocked	Internal Oscillator Block(2)
PRI_IDLE	1	00	Off	Clocked	Primary – LP, XT, HS, HSPLL, RC, EC
SEC_IDLE	1	01	Off	Clocked	Secondary – Timer1 Oscillator
RC_IDLE	1	1x	Off	Clocked	Internal Oscillator Block(2)

Note 1: IDLEN reflects its value when the SLEEP instruction is executed.
2: Includes INTOSC and INTOSC postscaler, as well as the INTRC source.

3.1.3 CLOCK TRANSITIONS AND STATUS INDICATORS

The length of the transition between clock sources is the sum of two cycles of the old clock source and three to four cycles of the new clock source. This formula assumes that the new clock source is stable.

Three bits indicate the current clock source and its status. They are:

- OSTS (OSCCON<3>)
- IOFS (OSCCON<2>)
- T1RUN (T1CON<6>)

In general, only one of these bits will be set while in a given power-managed mode. When the OSTS bit is set, the primary clock is providing the device clock. When the IOFS bit is set, the INTOSC output is providing a stable 8 MHz clock source to a divider that actually drives the device clock. When the T1RUN bit is set, the Timer1 oscillator is providing the clock. If none of these bits are set, then either the INTRC clock source is clocking the device, or the INTOSC source is not yet stable.

If the internal oscillator block is configured as the primary clock source by the FOSC<3:0> Configuration bits, then both the OSTS and IOFS bits may be set when in PRI_RUN or PRI_IDLE modes. This indicates that the primary clock (INTOSC output) is generating a stable 8 MHz output. Entering another INTOSC power-managed mode at the same frequency would clear the OSTS bit.

Note 1:	Caution should be used when modifying a single IRCF bit. If VDD is less than 3V, it is possible to select a higher clock speed than is supported by the low VDD. Improper device operation may result if the VDD/FOSC specifications are violated.
2:	Executing a SLEEP instruction does not necessarily place the device into Sleep mode. It acts as the trigger to place the controller into either the Sleep mode or one of the Idle modes, depending on the setting of the IDLEN bit.

3.1.4 MULTIPLE SLEEP COMMANDS

The power-managed mode that is invoked with the SLEEP instruction is determined by the setting of the IDLEN bit at the time the instruction is executed. If another SLEEP instruction is executed, the device will enter the power-managed mode specified by IDLEN at that time. If IDLEN has changed, the device will enter the new power-managed mode specified by the new setting.

3.2 Run Modes

In the Run modes, clocks to both the core and peripherals are active. The difference between these modes is the clock source.

3.2.1 PRI_RUN MODE

The PRI_RUN mode is the normal, full power execution mode of the microcontroller. This is also the default mode upon a device Reset, unless Two-Speed Start-up is enabled (see **Section 25.3 “Two-Speed Start-up”** for details). In this mode, the OSTS bit is set. The IOFS bit may be set if the internal oscillator block is the primary clock source (see **Section 2.7.1 “Oscillator Control Register”**).

3.2.2 SEC_RUN MODE

The SEC_RUN mode is the compatible mode to the “clock switching” feature offered in other PIC18 devices. In this mode, the CPU and peripherals are clocked from the Timer1 oscillator. This gives users the option of lower power consumption while still using a high accuracy clock source.

SEC_RUN mode is entered by setting the SCS<1:0> bits to ‘01’. The device clock source is switched to the Timer1 oscillator (see Figure 3-1), the primary oscillator is shut down, the T1RUN bit (T1CON<6>) is set and the OSTS bit is cleared.

Note:	The Timer1 oscillator should already be running prior to entering SEC_RUN mode. If the T1OSCEN bit is not set when the SCS<1:0> bits are set to ‘01’, entry to SEC_RUN mode will not occur. If the Timer1 oscillator is enabled, but not yet running, device clocks will be delayed until the oscillator has started; in such situations, initial oscillator operation is far from stable and unpredictable operation may result.

On transitions from SEC_RUN mode to PRI_RUN, the peripherals and CPU continue to be clocked from the Timer1 oscillator while the primary clock is started. When the primary clock becomes ready, a clock switch back to the primary clock occurs (see Figure 3-2). When the clock switch is complete, the T1RUN bit is cleared, the OSTS bit is set and the primary clock is providing the clock. The IDLEN and SCS bits are not affected by the wake-up; the Timer1 oscillator continues to run.

© 2008 Microchip Technology Inc.

FIGURE 3-1: TRANSITION TIMING FOR ENTRY TO SEC_RUN MODE

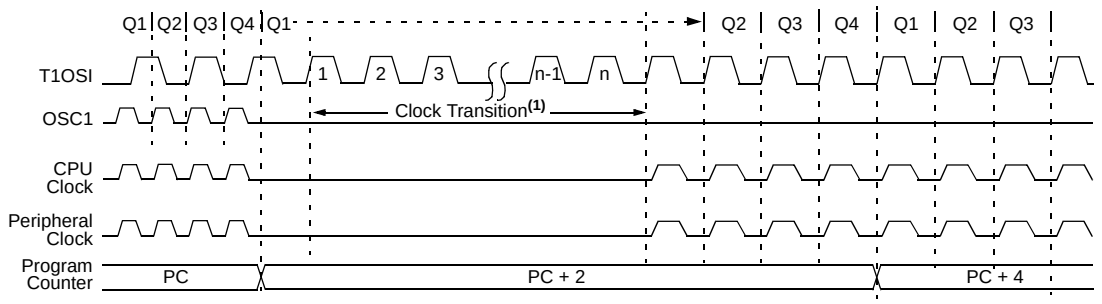

Note 1: Clock transition typically occurs within 2-4 TOSC.

FIGURE 3-2: TRANSITION TIMING FROM SEC_RUN MODE TO PRI_RUN MODE (HSPLL)

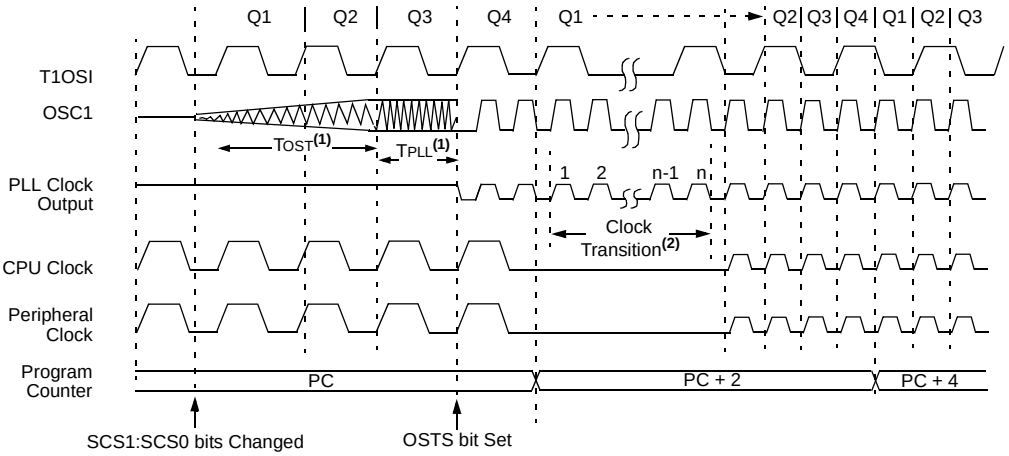

Note 1: TOST = 1024 TOSC; TPLL = 2 ms (approx). These intervals are not shown to scale.

2: Clock transition typically occurs within 2-4 TOSC.

3.2.3 RC_RUN MODE

In RC_RUN mode, the CPU and peripherals are clocked from the internal oscillator block using the INTOSC multiplexer. In this mode, the primary clock is shut down. When using the INTRC source, this mode provides the best power conservation of all the Run modes, while still executing code. It works well for user applications which are not highly timing-sensitive or do not require high-speed clocks at all times.

If the primary clock source is the internal oscillator block (either INTRC or INTOSC), there are no distinguishable differences between PRI_RUN and RC_RUN modes during execution. However, a clock switch delay will occur during entry to and exit from RC_RUN mode. Therefore, if the primary clock source is the internal oscillator block, the use of RC_RUN mode is not recommended.

This mode is entered by setting the SCS1 bit to ‘1’. Although it is ignored, it is recommended that the SCS0 bit also be cleared; this is to maintain software compatibility with future devices. When the clock source is switched to the INTOSC multiplexer (see Figure 3-3), the primary oscillator is shut down and the OSTS bit is cleared. The IRCF bits may be modified at any time to immediately change the clock speed.

Note:	Caution should be used when modifying a single IRCF bit. If VDD is less than 3V, it is possible to select a higher clock speed than is supported by the low VDD. Improper device operation may result if the VDD/FOSC specifications are violated.

If the IRCF bits and the INTSRC bit are all clear, the INTOSC output is not enabled and the IOFS bit will remain clear; there will be no indication of the current clock source. The INTRC source is providing the device clocks.

If the IRCF bits are changed from all clear (thus, enabling the INTOSC output) or if INTSRC is set, the IOFS bit becomes set after the INTOSC output becomes stable. Clocks to the device continue while the INTOSC source stabilizes after an interval of TIOBST (parameter 39, Table 28-12).

If the IRCF bits were previously at a non-zero value, or if INTSRC was set before setting SCS1 and the INTOSC source was already stable, the IOFS bit will remain set.

On transitions from RC_RUN mode to PRI_RUN mode, the device continues to be clocked from the INTOSC multiplexer while the primary clock is started. When the primary clock becomes ready, a clock switch to the primary clock occurs (see Figure 3-4). When the clock switch is complete, the IOFS bit is cleared, the OSTS bit is set and the primary clock is providing the device clock. The IDLEN and SCS bits are not affected by the switch. The INTRC source will continue to run if either the WDT or the Fail-Safe Clock Monitor is enabled.

FIGURE 3-3: TRANSITION TIMING TO RC_RUN MODE

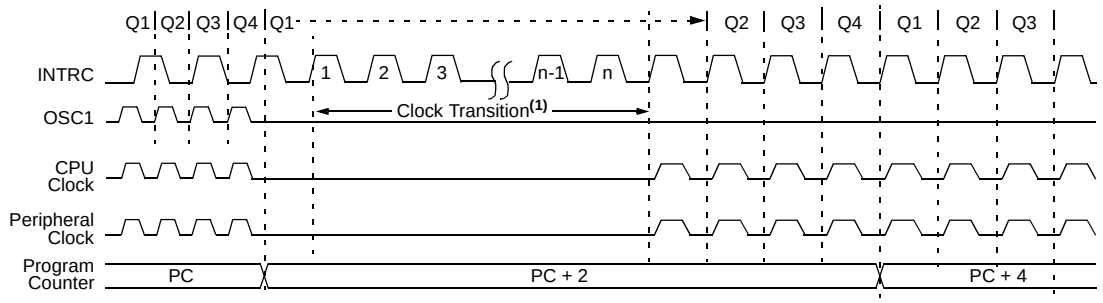

Note 1: Clock transition typically occurs within 2-4 TOSC.

FIGURE 3-4: TRANSITION TIMING FROM RC_RUN MODE TO PRI_RUN MODE

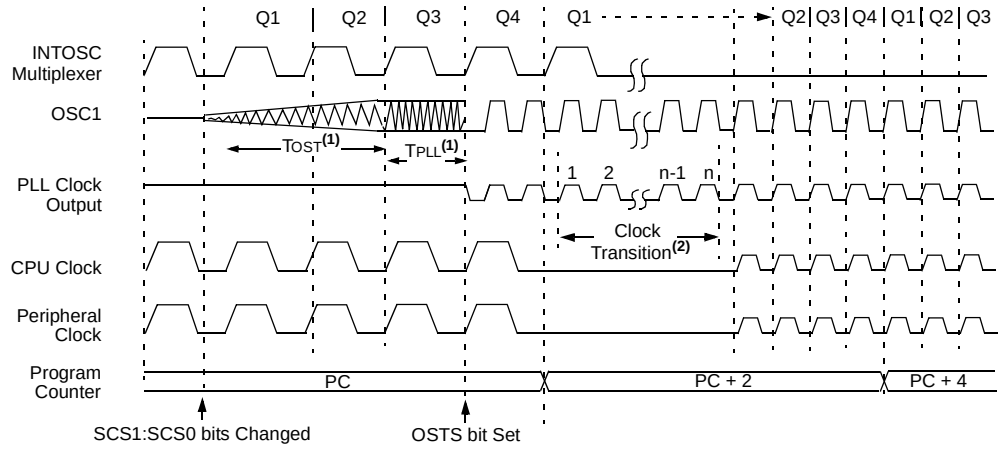

Note 1: TOST = 1024 TOSC; TPLL = 2 ms (approx). These intervals are not shown to scale.

2: Clock transition typically occurs within 2-4 TOSC.

© 2008 Microchip Technology Inc.

3.3 Sleep Mode

The power-managed Sleep mode in the PIC18F8722 family of devices is identical to the legacy Sleep mode offered in all other PIC devices. It is entered by clearing the IDLEN bit (the default state on device Reset) and executing the SLEEP instruction. This shuts down the selected oscillator (Figure 3-5). All clock source status bits are cleared.

Entering the Sleep mode from any other mode does not require a clock switch. This is because no clocks are needed once the controller has entered Sleep. If the WDT is selected, the INTRC source will continue to operate. If the Timer1 oscillator is enabled, it will also continue to run.

When a wake event occurs in Sleep mode (by interrupt, Reset or WDT time-out), the device will not be clocked until the clock source selected by the SCS<1:0> bits becomes ready (see Figure 3-6), or it will be clocked from the internal oscillator block if either the Two-Speed Start-up or the Fail-Safe Clock Monitor are enabled (see **Section 25.0 "Special Features of the CPU"**). In either case, the OSTS bit is set when the primary clock is providing the device clocks. The IDLEN and SCS bits are not affected by the wake-up.

3.4 Idle Modes

The Idle modes allow the controller's CPU to be selectively shut down while the peripherals continue to operate. Selecting a particular Idle mode allows users to further manage power consumption.

If the IDLEN bit is set to a '1' when a SLEEP instruction is executed, the peripherals will be clocked from the clock source selected using the SCS<1:0> bits; however, the CPU will not be clocked. The clock source status bits are not affected. Setting IDLEN and executing a SLEEP instruction provides a quick method of switching from a given Run mode to its corresponding Idle mode.

If the WDT is selected, the INTRC source will continue to operate. If the Timer1 oscillator is enabled, it will also continue to run.

Since the CPU is not executing instructions, the only exits from any of the Idle modes are by interrupt, WDT time-out or a Reset. When a wake event occurs, CPU execution is delayed by an interval of T_{CSD} (parameter 38, Table 28-12) while it becomes ready to execute code. When the CPU begins executing code, it resumes with the same clock source for the current Idle mode. For example, when waking from RC_IDLE mode, the internal oscillator block will clock the CPU and peripherals (in other words, RC_RUN mode). The IDLEN and SCS bits are not affected by the wake-up.

While in any Idle mode or the Sleep mode, a WDT time-out will result in a WDT wake-up to the Run mode currently specified by the SCS<1:0> bits.

FIGURE 3-5: TRANSITION TIMING FOR ENTRY TO SLEEP MODE

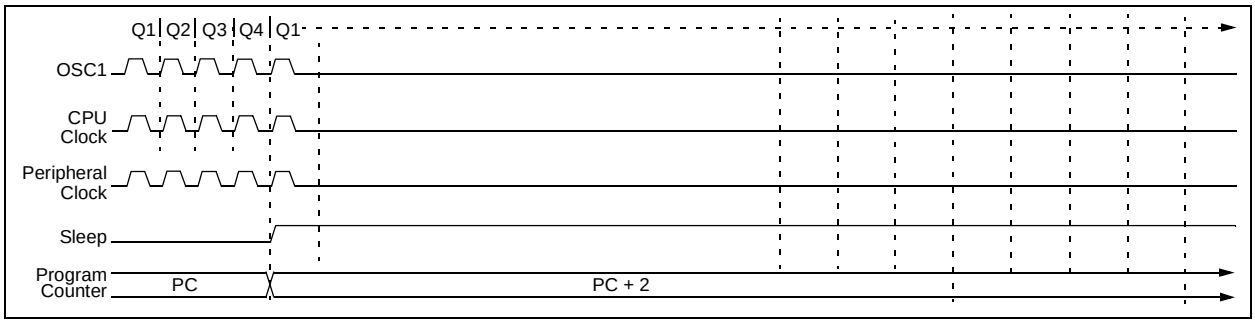

FIGURE 3-6: TRANSITION TIMING FOR WAKE FROM SLEEP (HSPLL)

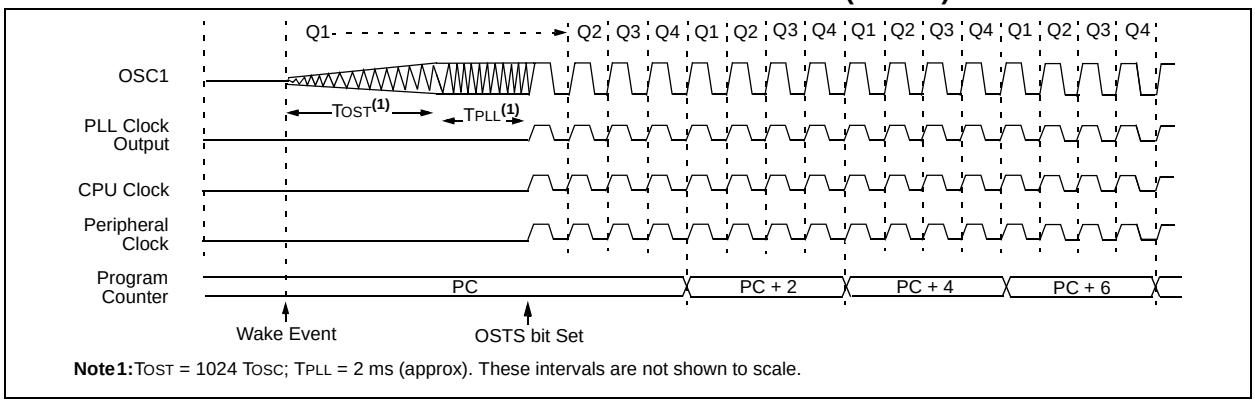

Note 1: T_{OST} = 1024 T_{OSC}; T_{PLL} = 2 ms (approx). These intervals are not shown to scale.

3.4.1 PRI_IDLE MODE

This mode is unique among the three low-power Idle modes, in that it does not disable the primary device clock. For timing sensitive applications, this allows for the fastest resumption of device operation with its more accurate primary clock source, since the clock source does not have to “warm-up” or transition from another oscillator.

PRI_IDLE mode is entered from PRI_RUN mode by setting the IDLEN bit and executing a SLEEP instruction. If the device is in another Run mode, set IDLEN first, then clear the SCS bits and execute SLEEP. Although the CPU is disabled, the peripherals continue to be clocked from the primary clock source specified by the FOSC<3:0> Configuration bits. The OSTS bit remains set (see Figure 3-7).

When a wake event occurs, the CPU is clocked from the primary clock source. A delay of interval TCSD (parameter 39, Table 28-12) is required between the wake event and when code execution starts. This is required to allow the CPU to become ready to execute instructions. After the wake-up, the OSTS bit remains set. The IDLEN and SCS bits are not affected by the wake-up (see Figure 3-8).

3.4.2 SEC_IDLE MODE

In SEC_IDLE mode, the CPU is disabled but the peripherals continue to be clocked from the Timer1 oscillator. This mode is entered from SEC_RUN by setting the IDLEN bit and executing a SLEEP instruction. If the device is in another Run mode, set the IDLEN bit first, then set the SCS<1:0> bits to ‘01’ and execute SLEEP. When the clock source is switched to the Timer1 oscillator, the primary oscillator is shut down, the OSTS bit is cleared and the T1RUN bit is set.

When a wake event occurs, the peripherals continue to be clocked from the Timer1 oscillator. After an interval of TCSD following the wake event, the CPU begins executing code being clocked by the Timer1 oscillator. The IDLEN and SCS bits are not affected by the wake-up; the Timer1 oscillator continues to run (see Figure 3-8).

Note:	The Timer1 oscillator should already be running prior to entering SEC_IDLE mode. If the T1OSCEN bit is not set when the SLEEP instruction is executed, the SLEEP instruction will be ignored and entry to SEC_IDLE mode will not occur. If the Timer1 oscillator is enabled but not yet running, peripheral clocks will be delayed until the oscillator has started. In such situations, initial oscillator operation is far from stable and unpredictable operation may result.

FIGURE 3-7: TRANSITION TIMING FOR ENTRY TO IDLE MODE

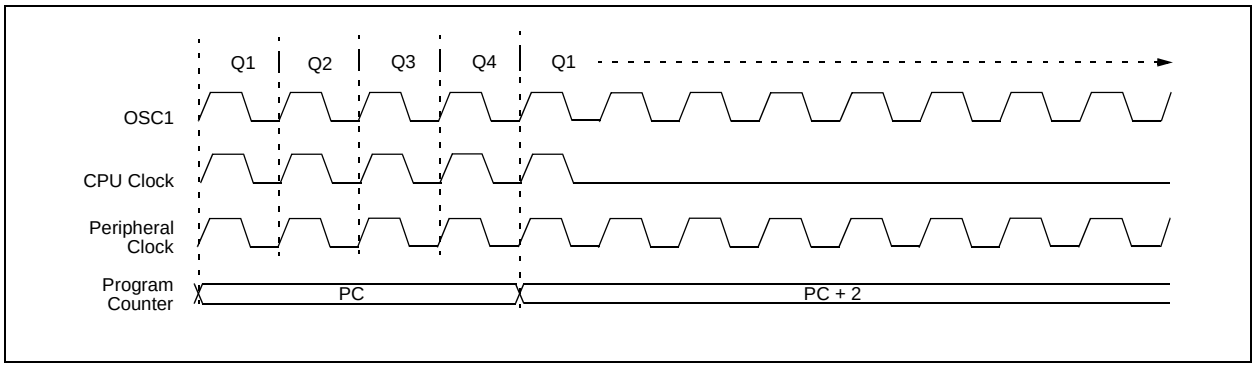

FIGURE 3-8: TRANSITION TIMING FOR WAKE FROM IDLE TO RUN MODE

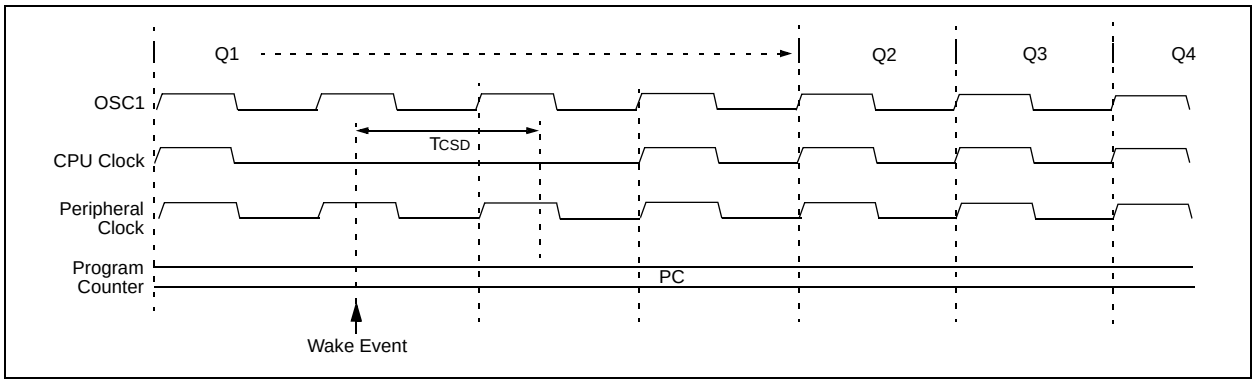

© 2008 Microchip Technology Inc.

3.4.3 RC_IDLE MODE

In RC_IDLE mode, the CPU is disabled but the peripherals continue to be clocked from the internal oscillator block using the INTOSC multiplexer. This mode allows for controllable power conservation during Idle periods.

From RC_RUN, this mode is entered by setting the IDLEN bit and executing a SLEEP instruction. If the device is in another Run mode, first set IDLEN, then set the SCS1 bit and execute SLEEP. Although its value is ignored, it is recommended that SCS0 also be cleared; this is to maintain software compatibility with future devices. The INTOSC multiplexer may be used to select a higher clock frequency by modifying the IRCF bits before executing the SLEEP instruction. When the clock source is switched to the INTOSC multiplexer, the primary oscillator is shut down and the OSTS bit is cleared.

If the IRCF bits are set to any non-zero value, or the INTSRC bit is set, the INTOSC output is enabled. The IOFS bit becomes set, after the INTOSC output becomes stable, after an interval of TIOBST (parameter 39, Table 28-12). Clocks to the peripherals continue while the INTOSC source stabilizes. If the IRCF bits were previously at a non-zero value, or INTSRC was set before the SLEEP instruction was executed and the INTOSC source was already stable, the IOFS bit will remain set. If the IRCF bits and INTSRC are all clear, the INTOSC output will not be enabled, the IOFS bit will remain clear and there will be no indication of the current clock source.

When a wake event occurs, the peripherals continue to be clocked from the INTOSC multiplexer. After a delay of TCSD (parameter 38, Table 28-12) following the wake event, the CPU begins executing code being clocked by the INTOSC multiplexer. The IDLEN and SCS bits are not affected by the wake-up. The INTRC source will continue to run if either the WDT or the Fail-Safe Clock Monitor is enabled.

3.5 Exiting Idle and Sleep Modes

An exit from Sleep mode or any of the Idle modes is triggered by an interrupt, a Reset or a WDT time-out. This section discusses the triggers that cause exits from power-managed modes. The clocking subsystem actions are discussed in each of the power-managed modes (see **Section 3.2 “Run Modes”, Section 3.3 “Sleep Mode”** and **Section 3.4 “Idle Modes”**).

3.5.1 EXIT BY INTERRUPT

Any of the available interrupt sources can cause the device to exit from an Idle mode or the Sleep mode to a Run mode. To enable this functionality, an interrupt source must be enabled by setting its enable bit in one of the INTCON or PIE registers. The exit sequence is initiated when the corresponding interrupt flag bit is set.

On all exits from Idle or Sleep modes by interrupt, code execution branches to the interrupt vector if the GIE/GIEH bit (INTCON<7>) is set. Otherwise, code execution continues or resumes without branching (see **Section 10.0 “Interrupts”**).

A fixed delay of interval TCSD following the wake event is required when leaving Sleep and Idle modes. This delay is required for the CPU to prepare for execution. Instruction execution resumes on the first clock cycle following this delay.

3.5.2 EXIT BY WDT TIME-OUT

A WDT time-out will cause different actions depending on which power-managed mode the device is in when the time-out occurs.

If the device is not executing code (all Idle modes and Sleep mode), the time-out will result in an exit from the power-managed mode (see **Section 3.2 “Run Modes”** and **Section 3.3 “Sleep Mode”**). If the device is executing code (all Run modes), the time-out will result in a WDT Reset (see **Section 25.2 “Watchdog Timer (WDT)”**).

The WDT timer and postscaler are cleared by executing a SLEEP or CLRWDT instruction, the loss of a currently selected clock source (if the Fail-Safe Clock Monitor is enabled) and modifying the IRCF bits in the OSCCON register if the internal oscillator block is the device clock source.

3.5.3 EXIT BY RESET

Normally, the device is held in Reset by the Oscillator Start-up Timer (OST) until the primary clock becomes ready. At that time, the OSTS bit is set and the device begins executing code. If the internal oscillator block is the new clock source, the IOFS bit is set instead.

The exit delay time from Reset to the start of code execution depends on both the clock sources before and after the wake-up and the type of oscillator if the new clock source is the primary clock. Exit delays are summarized in Table 3-2.

Code execution can begin before the primary clock becomes ready. If either the Two-Speed Start-up (see **Section 25.3 “Two-Speed Start-up”**) or Fail-Safe Clock Monitor (see **Section 25.4 “Fail-Safe Clock Monitor”**) is enabled, the device may begin execution as soon as the Reset source has cleared. Execution is clocked by the INTOSC multiplexer driven by the internal oscillator block. Execution is clocked by the internal oscillator block until either the primary clock becomes ready or a power-managed mode is entered before the primary clock becomes ready; the primary clock is then shut down.

3.5.4 EXIT WITHOUT AN OSCILLATOR START-UP DELAY

Certain exits from power-managed modes do not invoke the OST at all. There are two cases:

- PRI_IDLE mode, where the primary clock source is not stopped and
- the primary clock source is not any of the LP, XT, HS or HSPLL modes.

In these instances, the primary clock source either does not require an oscillator start-up delay since it is already running (PRI_IDLE), or normally does not require an oscillator start-up delay (RC, EC and INTIO Oscillator modes). However, a fixed delay of interval TCSD following the wake event is still required when leaving Sleep and Idle modes to allow the CPU to prepare for execution. Instruction execution resumes on the first clock cycle following this delay.

TABLE 3-2: EXIT DELAY ON WAKE-UP BY RESET FROM SLEEP MODE OR ANY IDLE MODE (BY CLOCK SOURCES)

Clock Source before Wake-up	Clock Source after Wake-up	Exit Delay	Clock Ready Status Bit (OSCCON)
Primary Device Clock (PRI_IDLE mode)	LP, XT, HS	TCSD(1)	OSTS
	HSPLL		
	EC, RC		
	INTOSC(2)		IOFS
T1OSC or INTRC	LP, XT, HS	TOST(3)	OSTS
	HSPLL	TOST + t_{rc}(3)	
	EC, RC	TCSD(1)	
	INTOSC(2)	TIOBST(4)	IOFS
INTOSC(2)	LP, XT, HS	TOST(4)	OSTS
	HSPLL	TOST + t_{rc}(3)	
	EC, RC	TCSD(1)	
	INTOSC(2)	None	IOFS
None (Sleep mode)	LP, XT, HS	TOST(3)	OSTS
	HSPLL	TOST + t_{rc}(3)	
	EC, RC	TCSD(1)	
	INTOSC(2)	TIOBST(4)	IOFS

Note 1: TCSD (parameter 38, Table 28-12) is a required delay when waking from Sleep and all Idle modes and runs concurrently with any other required delays (see **Section 3.4 “Idle Modes”**).

2: Includes both the INTOSC 8 MHz source and postscaler derived frequencies. On Reset, INTOSC defaults to 1 MHz.

3: TOST is the Oscillator Start-up Timer (parameter 32, Table 28-12). t_{rc} is the PLL Lock-out Timer (parameter F12, Table 28-7); it is also designated as TPLL.

4: Execution continues during TIOBST (parameter 39, Table 28-12), the INTOSC stabilization period.

© 2008 Microchip Technology Inc.

4.0 RESET

The PIC18F8722 family of devices differentiates between various kinds of Reset:

a) Power-on Reset (POR)
b) $\overline{\text{MCLR}}$ Reset during normal operation
c) $\overline{\text{MCLR}}$ Reset during power-managed modes
d) Watchdog Timer (WDT) Reset (during execution)
e) Programmable Brown-out Reset (BOR)
f) RESET Instruction
g) Stack Full Reset
h) Stack Underflow Reset

This section discusses Resets generated by $\overline{\text{MCLR}}$, POR and BOR and covers the operation of the various start-up timers. Stack Reset events are covered in **Section 5.1.3.4 "Stack Full and Underflow Resets"**. WDT Resets are covered in **Section 25.2 "Watchdog Timer (WDT)"**.

A simplified block diagram of the On-Chip Reset Circuit is shown in Figure 4-1.

4.1 RCON Register

Device Reset events are tracked through the RCON register (Register 4-1). The lower five bits of the register indicate that a specific Reset event has occurred. In most cases, these bits can only be cleared by the event and must be set by the application after the event. The state of these flag bits, taken together, can be read to indicate the type of Reset that just occurred. This is described in more detail in **Section 4.6 "Reset State of Registers"**.

The RCON register also has control bits for setting interrupt priority (IPEN) and software control of the BOR (SBOREN). Interrupt priority is discussed in **Section 10.0 "Interrupts"**. BOR is covered in **Section 4.4 "Brown-out Reset (BOR)"**.

FIGURE 4-1: SIMPLIFIED BLOCK DIAGRAM OF ON-CHIP RESET CIRCUIT

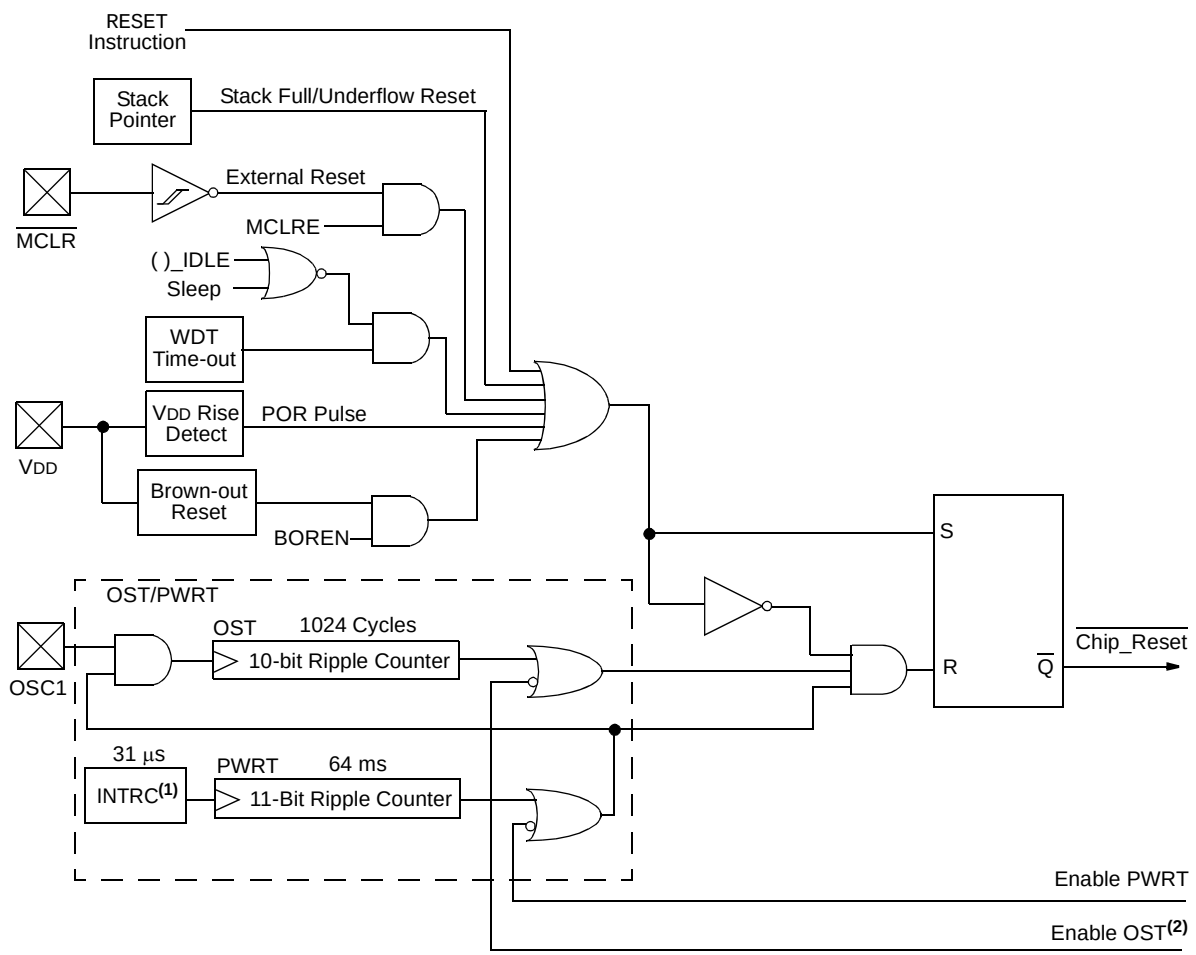

Note 1: This is the INTRC source from the internal oscillator block and is separate from the RC oscillator of the CLKI pin.
2: See Table 4-2 for time-out situations.

REGISTER 4-1: RCON: RESET CONTROL REGISTER

R/W-0	R/W-1[1]	U-0	R/W-1	R-1	R-1	R/W-0[2]	R/W-0
IPEN	SBOREN	—	$\overline{\text{RI}}$	$\overline{\text{TO}}$	$\overline{\text{PD}}$	$\overline{\text{POR}}$	$\overline{\text{BOR}}$
bit 7							bit 0

Legend:			
R = Readable bit	W = Writable bit	U = Unimplemented bit, read as ‘0’	
-n = Value at POR	‘1’ = Bit is set	‘0’ = Bit is cleared	x = Bit is unknown

bit 7 **IPEN:** Interrupt Priority Enable bit
1 = Enable priority levels on interrupts
0 = Disable priority levels on interrupts (PIC16CXXX Compatibility mode)

bit 6 **SBOREN:** BOR Software Enable bit[1]
If BOREN<1:0> = 01:
1 = BOR is enabled
0 = BOR is disabled
If BOREN<1:0> = 00, 10 or 11:
Bit is disabled and read as ‘0’

bit 5 **Unimplemented:** Read as ‘0’

bit 4 **$\overline{\text{RI}}$:** RESET Instruction Flag bit
1 = The RESET instruction was not executed (set by firmware only)
0 = The RESET instruction was executed causing a device Reset (must be set in software after a Brown-out Reset occurs)

bit 3 **$\overline{\text{TO}}$:** Watchdog Time-out Flag bit
1 = Set by power-up, CLRWDT instruction or SLEEP instruction
0 = A WDT time-out occurred

bit 2 **$\overline{\text{PD}}$:** Power-down Detection Flag bit
1 = Set by power-up or by the CLRWDT instruction
0 = Set by execution of the SLEEP instruction

bit 1 **$\overline{\text{POR}}$:** Power-on Reset Status bit[2]
1 = A Power-on Reset has not occurred (set by firmware only)
0 = A Power-on Reset occurred (must be set in software after a Power-on Reset occurs)

bit 0 **$\overline{\text{BOR}}$:** Brown-out Reset Status bit
1 = A Brown-out Reset has not occurred (set by firmware only)
0 = A Brown-out Reset occurred (must be set in software after a Brown-out Reset occurs)

Note 1: If SBOREN is enabled, its Reset state is ‘1’; otherwise, it is ‘0’.
2: The actual Reset value of $\overline{\text{POR}}$ is determined by the type of device Reset. See the notes following this register and **Section 4.6 “Reset State of Registers”** for additional information.

Note 1: It is recommended that the $\overline{\text{POR}}$ bit be set after a Power-on Reset has been detected so that subsequent Power-on Resets may be detected.
2: Brown-out Reset is said to have occurred when $\overline{\text{BOR}}$ is ‘0’ and POR is ‘1’ (assuming that $\overline{\text{POR}}$ was set to ‘1’ by software immediately after POR).

© 2008 Microchip Technology Inc.

4.2 Master Clear ($\overline{\text{MCLR}}$)

The $\overline{\text{MCLR}}$ pin provides a method for triggering an external Reset of the device. A Reset is generated by holding the pin low. These devices have a noise filter in the $\overline{\text{MCLR}}$ Reset path which detects and ignores small pulses.

The $\overline{\text{MCLR}}$ pin is not driven low by any internal Resets, including the WDT.

In the PIC18F8722 family of devices, the $\overline{\text{MCLR}}$ input can be disabled with the MCLRE Configuration bit. When $\overline{\text{MCLR}}$ is disabled, the pin becomes a digital input. See **Section 11.5 "PORTE, TRISE and LATE Registers"** for more information.

4.3 Power-on Reset (POR)

A Power-on Reset pulse is generated on-chip whenever VDD rises above a certain threshold. This allows the device to start in the initialized state when VDD is adequate for operation.

To take advantage of the POR circuitry, tie the $\overline{\text{MCLR}}$ pin through a resistor (1 kΩ to 10 kΩ) to VDD. This will eliminate external RC components usually needed to create a Power-on Reset delay. A minimum rise rate for VDD is specified (parameter D004, "Section **28.2 "DC Characteristics: Power-Down and Supply Current"**). For a slow rise time, see Figure 4-2.

When the device starts normal operation (i.e., exits the Reset condition), device operating parameters (voltage, frequency, temperature, etc.) must be met to ensure operation. If these conditions are not met, the device must be held in Reset until the operating conditions are met.

POR events are captured by the $\overline{\text{POR}}$ bit (RCON<1>). The state of the bit is set to '0' whenever a POR occurs; it does not change for any other Reset event. $\overline{\text{POR}}$ is not reset to '1' by any hardware event. To capture multiple events, the user manually resets the bit to '1' in software following any POR.

FIGURE 4-2: EXTERNAL POWER-ON RESET CIRCUIT (FOR SLOW VDD POWER-UP)(1)

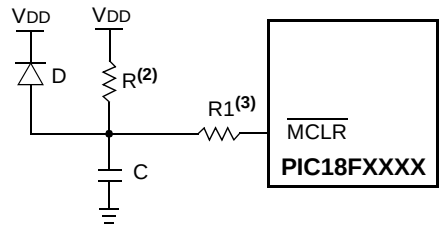

Note 1: External Power-on Reset circuit is required only if the VDD power-up slope is too slow. The diode D helps discharge the capacitor quickly when VDD powers down.

2: R < 40 kΩ is recommended to make sure that the voltage drop across R does not violate the device's electrical specification.

3: R1 ≥ 1 kΩ will limit any current flowing into $\overline{\text{MCLR}}$ from external capacitor C, in the event of $\overline{\text{MCLR}}$/VPP pin breakdown, due to Electrostatic Discharge (ESD) or Electrical Overstress (EOS).

4.4 Brown-out Reset (BOR)

The PIC18F8722 family of devices implements a BOR circuit that provides the user with a number of configuration and power-saving options. The BOR is controlled by the BORV<1:0> and BOREN<1:0> Configuration bits. There are a total of four BOR configurations which are summarized in Table 4-1.

The BOR threshold is set by the BORV<1:0> bits. If BOR is enabled (any values of BOREN<1:0>, except '00'), any drop of V_{DD} below V_{BOR} (parameter D005, **Section 28.1 "DC Characteristics"**) for greater than T_{BOR} (parameter 35, Table 28-12) will reset the device. A Reset may or may not occur if V_{DD} falls below V_{BOR} for less than T_{BOR}. The chip will remain in Brown-out Reset until V_{DD} rises above V_{BOR}.

If the Power-up Timer is enabled, it will be invoked after V_{DD} rises above V_{BOR}; it then will keep the chip in Reset for an additional time delay, T_{PWRT} (parameter 33, Table 28-12). If V_{DD} drops below V_{BOR} while the Power-up Timer is running, the chip will go back into a Brown-out Reset and the Power-up Timer will be initialized. Once V_{DD} rises above V_{BOR}, the Power-up Timer will execute the additional time delay.

BOR and the Power-on Timer (PWRT) are independently configured. Enabling BOR Reset does not automatically enable the PWRT.

4.4.1 SOFTWARE ENABLED BOR

When BOREN<1:0> = 01, the BOR can be enabled or disabled by the user in software. This is done with the control bit, SBOREN (RCON<6>). Setting SBOREN enables the BOR to function as previously described. Clearing SBOREN disables the BOR entirely. The SBOREN bit operates only in this mode; otherwise it is read as '0'.

Placing the BOR under software control gives the user the additional flexibility of tailoring the application to its environment without having to reprogram the device to change the BOR configuration. It also allows the user to tailor device power consumption in software by eliminating the incremental current that the BOR consumes. While the BOR current is typically very small, it may have some impact in low-power applications.

Note:	Even when BOR is under software control, the BOR Reset voltage level is still set by the BORV<1:0> Configuration bits. It cannot be changed in software.

4.4.2 DETECTING BOR

When BOR is enabled, the $\overline{BOR}$ bit always resets to '0' on any BOR or POR event. This makes it difficult to determine if a BOR event has occurred just by reading the state of $\overline{BOR}$ alone. A more reliable method is to simultaneously check the state of both $\overline{POR}$ and $\overline{BOR}$. This assumes that the $\overline{POR}$ bit is reset to '1' in software immediately after any POR event. If $\overline{BOR}$ is '0' while $\overline{POR}$ is '1', it can be reliably assumed that a BOR event has occurred.

4.4.3 DISABLING BOR IN SLEEP MODE

When BOREN<1:0> = 10, the BOR remains under hardware control and operates as previously described. Whenever the device enters Sleep mode, however, the BOR is automatically disabled. When the device returns to any other operating mode, BOR is automatically re-enabled.

This mode allows for applications to recover from brown-out situations, while actively executing code, when the device requires BOR protection the most. At the same time, it saves additional power in Sleep mode by eliminating the small incremental BOR current.

TABLE 4-1: BOR CONFIGURATIONS

BOR Configuration		Status of SBOREN (RCON<6>)	BOR Operation
BOREN1	BOREN0		
0	0	Unavailable	BOR disabled; must be enabled by reprogramming the Configuration bits.
0	1	Available	BOR enabled in software; operation controlled by SBOREN.
1	0	Unavailable	BOR enabled in hardware in Run and Idle modes, disabled during Sleep mode.
1	1	Unavailable	BOR enabled in hardware; must be disabled by reprogramming the Configuration bits.

© 2008 Microchip Technology Inc.

4.5 Device Reset Timers

The PIC18F8722 family of devices incorporates three separate on-chip timers that help regulate the Power-on Reset process. Their main function is to ensure that the device clock is stable before code is executed. These timers are:

- Power-up Timer (PWRT)
- Oscillator Start-up Timer (OST)
- PLL Lock Time-out

4.5.1 POWER-UP TIMER (PWRT)

The Power-up Timer (PWRT) of the PIC18F8722 family of devices is an 11-bit counter which uses the INTRC source as the clock input. While the PWRT is counting, the device is held in Reset.

The power-up time delay depends on the INTRC clock and will vary from chip-to-chip due to temperature and process variation. See DC parameter 33 in Table 28-12 for details.

The PWRT is enabled by clearing the $\overline{\text{PWRTEN}}$ Configuration bit.

4.5.2 OSCILLATOR START-UP TIMER (OST)

The Oscillator Start-up Timer (OST) provides a 1024 oscillator cycle (from OSC1 input) delay after the PWRT delay is over (parameter 33, Table 28-12). This ensures that the crystal oscillator or resonator has started and stabilized.

The OST time-out is invoked only for XT, LP, HS and HSPLL modes and only on Power-on Reset, or on exit from most power-managed modes.

4.5.3 PLL LOCK TIME-OUT

With the PLL enabled in its PLL mode, the time-out sequence following a Power-on Reset is slightly different from other oscillator modes. A separate timer is used to provide a fixed time-out that is sufficient for the PLL to lock to the main oscillator frequency. This PLL lock time-out (T_{PLL}) is typically 2 ms and follows the oscillator start-up time-out.

4.5.4 TIME-OUT SEQUENCE

On power-up, the time-out sequence is as follows:

1. After the POR pulse has cleared, PWRT time-out is invoked (if enabled).
2. Then, the OST is activated.

The total time-out will vary based on oscillator configuration and the status of the PWRT. Figure 4-3, Figure 4-4, Figure 4-5, Figure 4-6 and Figure 4-7 all depict time-out sequences on power-up, with the Power-up Timer enabled and the device operating in HS Oscillator mode. Figures 4-3 through 4-6 also apply to devices operating in XT or LP modes. For devices in RC mode and with the PWRT disabled, on the other hand, there will be no time-out at all.

Since the time-outs occur from the POR pulse, if $\overline{\text{MCLR}}$ is kept low long enough, all time-outs will expire. Bringing $\overline{\text{MCLR}}$ high will begin execution immediately (Figure 4-5). This is useful for testing purposes or to synchronize more than one PIC18F8722 family device operating in parallel.

TABLE 4-2: TIME-OUT IN VARIOUS SITUATIONS

Oscillator Configuration	Power-up(2) and Brown-out		Exit from Power-Managed Mode
	$\overline{\text{PWRTEN}}$ = 0	$\overline{\text{PWRTEN}}$ = 1	
HSPLL	T_{PWRT}(1) + 1024 T_{OSC} + T_{PLL}(2)	1024 T_{OSC} + T_{PLL}(2)	1024 T_{OSC} + T_{PLL}(2)
HS, XT, LP	T_{PWRT}(1) + 1024 T_{OSC}	1024 T_{OSC}	1024 T_{OSC}
EC, ECIO	T_{PWRT}(1)	—	—
RC, RCIO	T_{PWRT}(1)	—	—
INTIO1, INTIO2	T_{PWRT}(1)	—	—

Note 1: See parameter 33, Table 28-12.
2: 2 ms is the nominal time required for the PLL to lock.

FIGURE 4-3: TIME-OUT SEQUENCE ON POWER-UP ($\overline{\text{MCLR}}$ TIED TO V_{DD}, V_{DD} RISE < T_{PWRT})

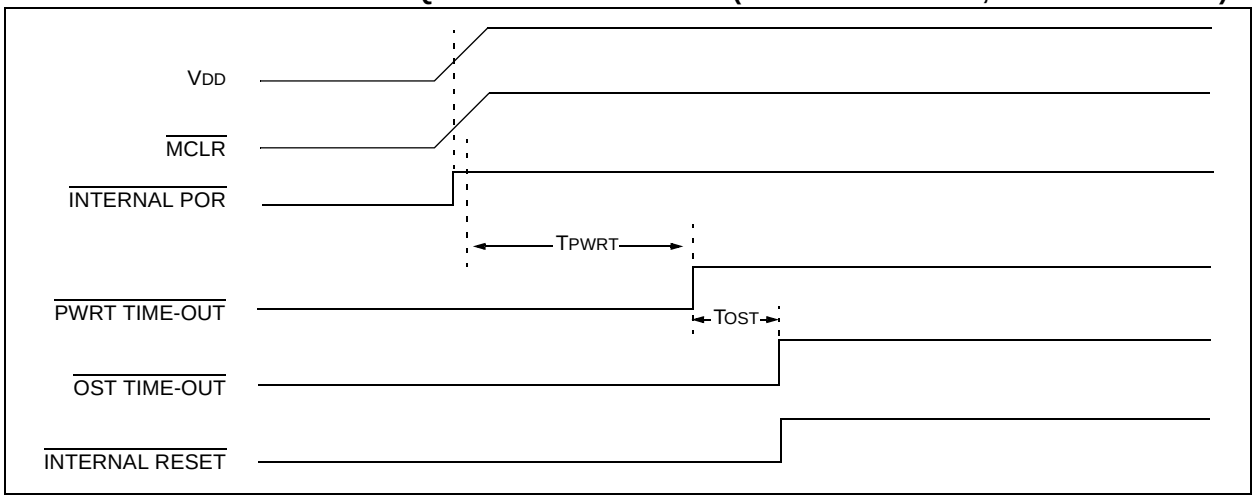

FIGURE 4-4: TIME-OUT SEQUENCE ON POWER-UP ($\overline{\text{MCLR}}$ NOT TIED TO V_{DD}): CASE 1

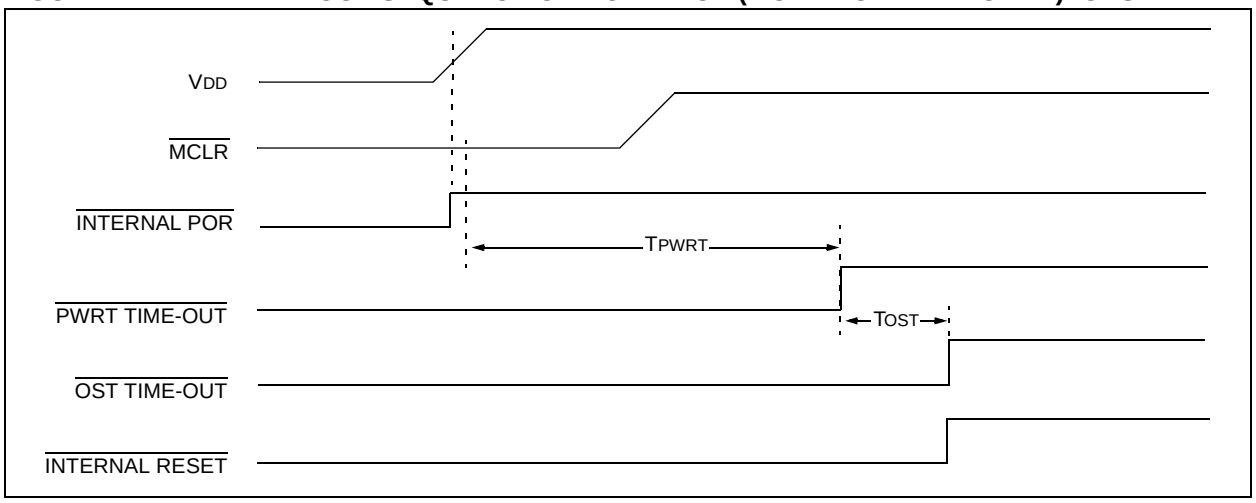

FIGURE 4-5: TIME-OUT SEQUENCE ON POWER-UP ($\overline{\text{MCLR}}$ NOT TIED TO V_{DD}): CASE 2

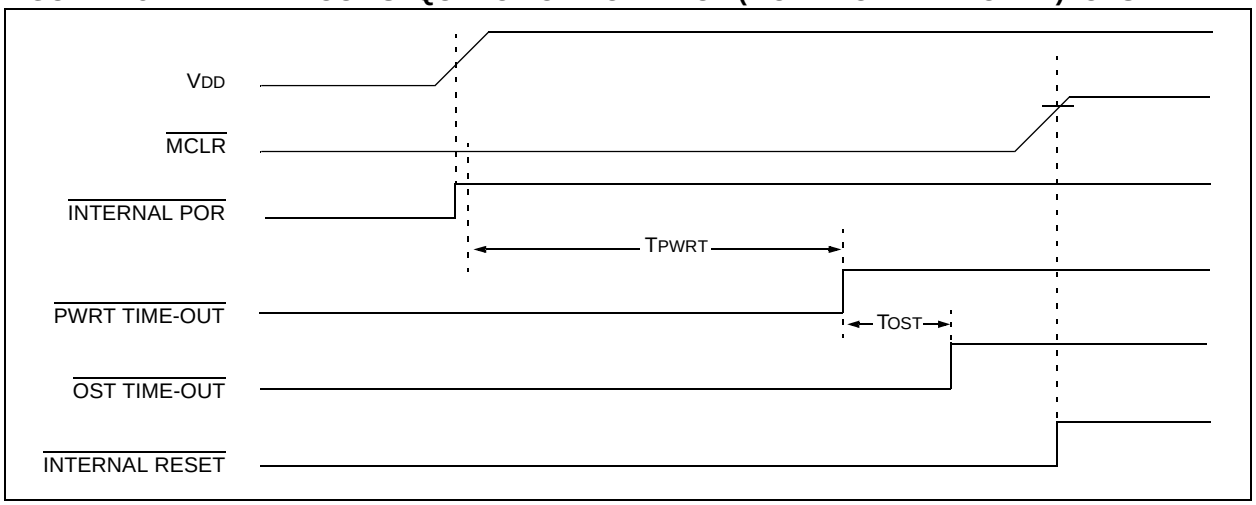

© 2008 Microchip Technology Inc.

FIGURE 4-6: SLOW RISE TIME ($\overline{MCLR}$ TIED TO V_{DD}, V_{DD} RISE > T_{PWRT})

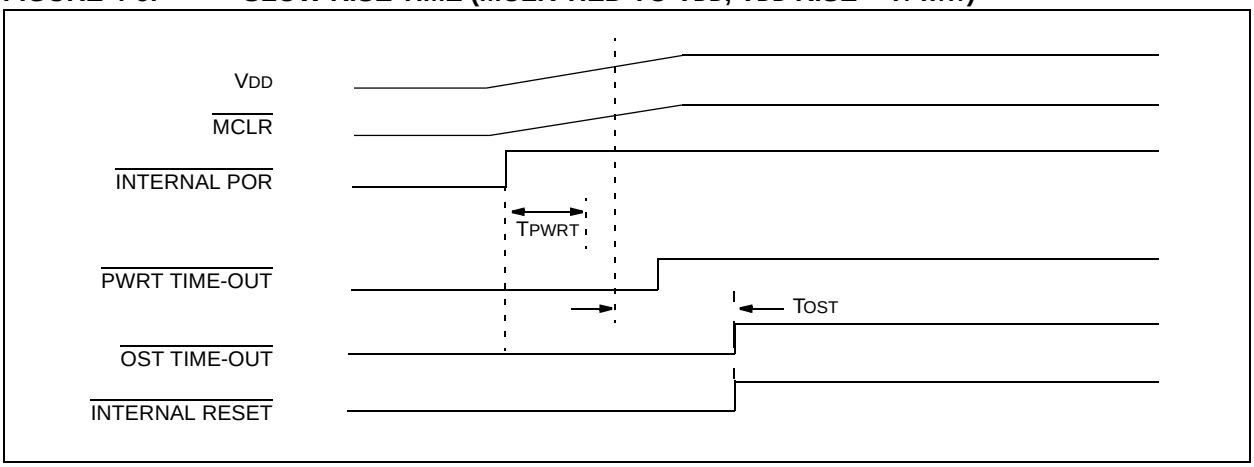

FIGURE 4-7: TIME-OUT SEQUENCE ON POR w/PLL ENABLED ($\overline{MCLR}$ TIED TO V_{DD})

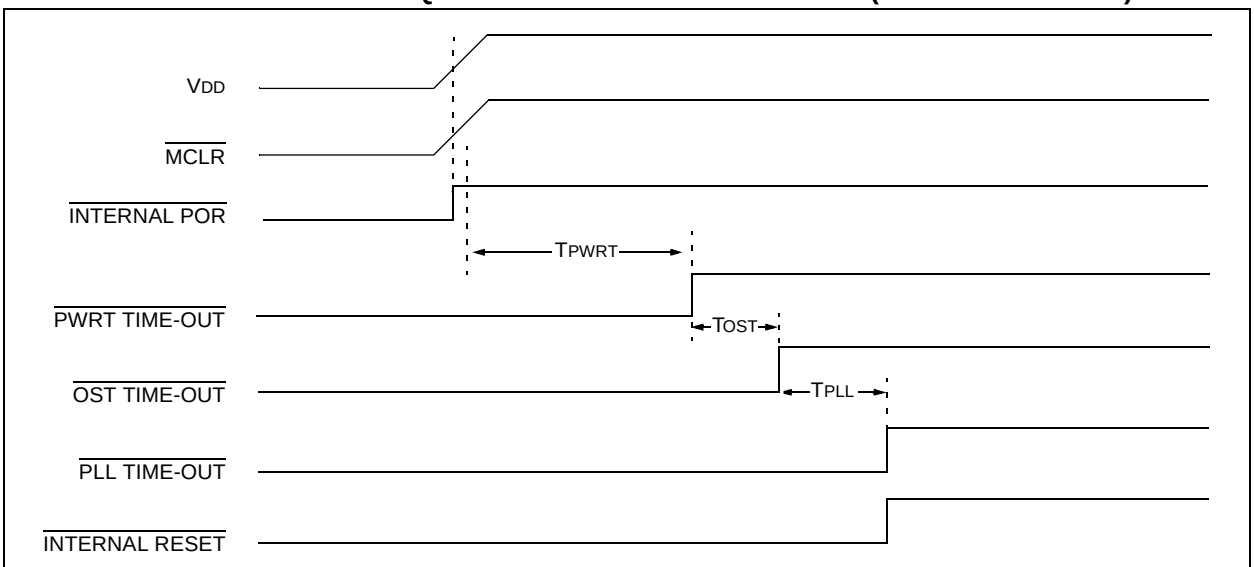

Note: T_{OST} = 1024 clock cycles.
$T_{PLL} \approx$ 2 ms is the nominal time required for the PLL to lock.

4.6 Reset State of Registers

Most registers are unaffected by a Reset. Their status is unknown on POR and unchanged by all other Resets. All other registers are forced to a “Reset state” depending on the type of Reset that occurred.

Most registers are not affected by a WDT wake-up, since this is viewed as the resumption of normal operation. Status bits from the RCON register, $\overline{RI}$, $\overline{TO}$, $\overline{PD}$, $\overline{POR}$ and $\overline{BOR}$, are set or cleared differently in different Reset situations, as indicated in Table 4-3. These bits are used in software to determine the nature of the Reset.

Table 4-4 describes the Reset states for all of the Special Function Registers. These are categorized by Power-on and Brown-out Resets, Master Clear and WDT Resets and WDT wake-ups.

TABLE 4-3: STATUS BITS, THEIR SIGNIFICANCE AND THE INITIALIZATION CONDITION FOR RCON REGISTER

Condition	Program Counter	RCON Register						STKPTR Register	
		SBOREN	$\overline{RI}$	$\overline{TO}$	$\overline{PD}$	$\overline{POR}$	$\overline{BOR}$	STKFUL	STKUNF
Power-on Reset	0000h	1	1	1	1	0	0	0	0
RESET Instruction	0000h	u(2)	0	u	u	u	u	u	u
Brown-out Reset	0000h	u(2)	1	1	1	u	0	u	u
$\overline{MCLR}$ during Power-Managed Run Modes	0000h	u(2)	u	1	u	u	u	u	u
$\overline{MCLR}$ during Power-Managed Idle Modes and Sleep Mode	0000h	u(2)	u	1	0	u	u	u	u
WDT Time-out during Full Power or Power-Managed Run Mode	0000h	u(2)	u	0	u	u	u	u	u
$\overline{MCLR}$ during Full Power Execution	0000h	u(2)	u	u	u	u	u	u	u
Stack Full Reset (STVREN = 1)	0000h	u(2)	u	u	u	u	u	1	u
Stack Underflow Reset (STVREN = 1)	0000h	u(2)	u	u	u	u	u	u	1
Stack Underflow Error (not an actual Reset, STVREN = 0)	0000h	u(2)	u	u	u	u	u	u	1
WDT Time-out during Power-Managed Idle or Sleep Modes	PC + 2	u(2)	u	0	0	u	u	u	u
Interrupt Exit from Power-Managed Modes	PC + 2(1)	u(2)	u	u	0	u	u	u	u

Legend: u = unchanged

Note 1: When the wake-up is due to an interrupt and the GIEH or GIEL bits are set, the PC is loaded with the interrupt vector (008h or 0018h).

2: Reset state is ‘1’ for POR and unchanged for all other Resets when software BOR is enabled (BOREN<1:0> Configuration bits = 01 and SBOREN = 1). Otherwise, the Reset state is ‘0’.

© 2008 Microchip Technology Inc.

TABLE 4-4: INITIALIZATION CONDITIONS FOR ALL REGISTERS

Register	Applicable Devices				Power-on Reset, Brown-out Reset	$\overline{\text{MCLR}}$ Resets, WDT Reset, RESET Instruction, Stack Resets	Wake-up via WDT or Interrupt
TOSU	6X27	6X22	8X27	8X22	---0 0000	---0 0000	---0 uuuu(3)
TOSH	6X27	6X22	8X27	8X22	0000 0000	0000 0000	uuuu uuuu(3)
TOSL	6X27	6X22	8X27	8X22	0000 0000	0000 0000	uuuu uuuu(3)
STKPTR	6X27	6X22	8X27	8X22	00-0 0000	uu-u uuuu	uu-u uuuu(3)
PCLATU	6X27	6X22	8X27	8X22	---0 0000	---0 0000	---u uuuu
PCLATH	6X27	6X22	8X27	8X22	0000 0000	0000 0000	uuuu uuuu
PCL	6X27	6X22	8X27	8X22	0000 0000	0000 0000	PC + 2(2)
TBLPTRU	6X27	6X22	8X27	8X22	--00 0000	--00 0000	--uu uuuu
TBLPTRH	6X27	6X22	8X27	8X22	0000 0000	0000 0000	uuuu uuuu
TBLPTRL	6X27	6X22	8X27	8X22	0000 0000	0000 0000	uuuu uuuu
TABLAT	6X27	6X22	8X27	8X22	0000 0000	0000 0000	uuuu uuuu
PRODH	6X27	6X22	8X27	8X22	xxxx xxxx	uuuu uuuu	uuuu uuuu
PRODL	6X27	6X22	8X27	8X22	xxxx xxxx	uuuu uuuu	uuuu uuuu
INTCON	6X27	6X22	8X27	8X22	0000 000x	0000 000u	uuuu uuuu(1)
INTCON2	6X27	6X22	8X27	8X22	1111 1111	1111 1111	uuuu uuuu(1)
INTCON3	6X27	6X22	8X27	8X22	1100 0000	1100 0000	uuuu uuuu(1)
INDF0	6X27	6X22	8X27	8X22	N/A	N/A	N/A
POSTINC0	6X27	6X22	8X27	8X22	N/A	N/A	N/A
POSTDEC0	6X27	6X22	8X27	8X22	N/A	N/A	N/A
PREINC0	6X27	6X22	8X27	8X22	N/A	N/A	N/A
PLUSW0	6X27	6X22	8X27	8X22	N/A	N/A	N/A
FSR0H	6X27	6X22	8X27	8X22	---- 0000	---- 0000	---- uuuu
FSR0L	6X27	6X22	8X27	8X22	xxxx xxxx	uuuu uuuu	uuuu uuuu
WREG	6X27	6X22	8X27	8X22	xxxx xxxx	uuuu uuuu	uuuu uuuu
INDF1	6X27	6X22	8X27	8X22	N/A	N/A	N/A
POSTINC1	6X27	6X22	8X27	8X22	N/A	N/A	N/A
POSTDEC1	6X27	6X22	8X27	8X22	N/A	N/A	N/A
PREINC1	6X27	6X22	8X27	8X22	N/A	N/A	N/A
PLUSW1	6X27	6X22	8X27	8X22	N/A	N/A	N/A

Legend: u = unchanged, x = unknown, - = unimplemented bit, read as '0', q = value depends on condition.
Shaded cells indicate conditions do not apply for the designated device.

Note 1: One or more bits in the INTCONx or PIRx registers will be affected (to cause wake-up).

2: When the wake-up is due to an interrupt and the GIEL or GIEH bit is set, the PC is loaded with the interrupt vector (0008h or 0018h).

3: When the wake-up is due to an interrupt and the GIEL or GIEH bit is set, the TOSU, TOSH and TOSL are updated with the current value of the PC. The STKPTR is modified to point to the next location in the hardware stack.

4: See Table 4-3 for Reset value for specific condition.

5: Bits 6 and 7 of PORTA, LATA and TRISA are enabled, depending on the oscillator mode selected. When not enabled as PORTA pins, they are disabled and read '0'.

TABLE 4-4: INITIALIZATION CONDITIONS FOR ALL REGISTERS (CONTINUED)

Register	Applicable Devices				Power-on Reset, Brown-out Reset	$\overline{\text{MCLR}}$ Resets, WDT Reset, RESET Instruction, Stack Resets	Wake-up via WDT or Interrupt
FSR1H	6X27	6X22	8X27	8X22	---- 0000	---- 0000	---- uuuu
FSR1L	6X27	6X22	8X27	8X22	xxxx xxxx	uuuu uuuu	uuuu uuuu
BSR	6X27	6X22	8X27	8X22	---- 0000	---- 0000	---- uuuu
INDF2	6X27	6X22	8X27	8X22	N/A	N/A	N/A
POSTINC2	6X27	6X22	8X27	8X22	N/A	N/A	N/A
POSTDEC2	6X27	6X22	8X27	8X22	N/A	N/A	N/A
PREINC2	6X27	6X22	8X27	8X22	N/A	N/A	N/A
PLUSW2	6X27	6X22	8X27	8X22	N/A	N/A	N/A
FSR2H	6X27	6X22	8X27	8X22	---- 0000	---- 0000	---- uuuu
FSR2L	6X27	6X22	8X27	8X22	xxxx xxxx	uuuu uuuu	uuuu uuuu
STATUS	6X27	6X22	8X27	8X22	---x xxxx	---u uuuu	---u uuuu
TMR0H	6X27	6X22	8X27	8X22	0000 0000	0000 0000	uuuu uuuu
TMR0L	6X27	6X22	8X27	8X22	xxxx xxxx	uuuu uuuu	uuuu uuuu
T0CON	6X27	6X22	8X27	8X22	1111 1111	1111 1111	uuuu uuuu
OSCCON	6X27	6X22	8X27	8X22	0100 q000	0100 q000	uuuu uuqu
HLVDCON	6X27	6X22	8X27	8X22	0-00 0101	0-00 0101	u-uu uuuu
WDTCON	6X27	6X22	8X27	8X22	---- ---0	---- ---0	---- ---u
RCON(4)	6X27	6X22	8X27	8X22	0q-1 11q0	0q-q qquu	uq-u qquu
TMR1H	6X27	6X22	8X27	8X22	xxxx xxxx	uuuu uuuu	uuuu uuuu
TMR1L	6X27	6X22	8X27	8X22	xxxx xxxx	uuuu uuuu	uuuu uuuu
T1CON	6X27	6X22	8X27	8X22	0000 0000	u0uu uuuu	uuuu uuuu
TMR2	6X27	6X22	8X27	8X22	0000 0000	0000 0000	uuuu uuuu
PR2	6X27	6X22	8X27	8X22	1111 1111	uuuu uuuu	uuuu uuuu
T2CON	6X27	6X22	8X27	8X22	-000 0000	-000 0000	-uuu uuuu
SSP1BUF	6X27	6X22	8X27	8X22	xxxx xxxx	uuuu uuuu	uuuu uuuu
SSP1ADD	6X27	6X22	8X27	8X22	0000 0000	0000 0000	uuuu uuuu
SSP1STAT	6X27	6X22	8X27	8X22	0000 0000	0000 0000	uuuu uuuu
SSP1CON1	6X27	6X22	8X27	8X22	0000 0000	0000 0000	uuuu uuuu
SSP1CON2	6X27	6X22	8X27	8X22	0000 0000	0000 0000	uuuu uuuu

Legend: u = unchanged, x = unknown, - = unimplemented bit, read as '0', q = value depends on condition.
Shaded cells indicate conditions do not apply for the designated device.

Note 1: One or more bits in the INTCONx or PIRx registers will be affected (to cause wake-up).

2: When the wake-up is due to an interrupt and the GIEL or GIEH bit is set, the PC is loaded with the interrupt vector (0008h or 0018h).

3: When the wake-up is due to an interrupt and the GIEL or GIEH bit is set, the TOSU, TOSH and TOSL are updated with the current value of the PC. The STKPTR is modified to point to the next location in the hardware stack.

4: See Table 4-3 for Reset value for specific condition.

5: Bits 6 and 7 of PORTA, LATA and TRISA are enabled, depending on the oscillator mode selected. When not enabled as PORTA pins, they are disabled and read '0'.

© 2008 Microchip Technology Inc.

TABLE 4-4: INITIALIZATION CONDITIONS FOR ALL REGISTERS (CONTINUED)

Register	Applicable Devices				Power-on Reset, Brown-out Reset	$\overline{\text{MCLR}}$ Resets, WDT Reset, RESET Instruction, Stack Resets	Wake-up via WDT or Interrupt
ADRESH	6X27	6X22	8X27	8X22	xxxx xxxx	uuuu uuuu	uuuu uuuu
ADRESL	6X27	6X22	8X27	8X22	xxxx xxxx	uuuu uuuu	uuuu uuuu
ADCON0	6X27	6X22	8X27	8X22	--00 0000	--00 0000	--uu uuuu
ADCON1	6X27	6X22	8X27	8X22	--00 0000	--00 0000	--uu uuuu
ADCON2	6X27	6X22	8X27	8X22	0-00 0000	0-00 0000	u-uu uuuu
CCPR1H	6X27	6X22	8X27	8X22	xxxx xxxx	uuuu uuuu	uuuu uuuu
CCPR1L	6X27	6X22	8X27	8X22	xxxx xxxx	uuuu uuuu	uuuu uuuu
CCP1CON	6X27	6X22	8X27	8X22	0000 0000	0000 0000	uuuu uuuu
CCPR2H	6X27	6X22	8X27	8X22	xxxx xxxx	uuuu uuuu	uuuu uuuu
CCPR2L	6X27	6X22	8X27	8X22	xxxx xxxx	uuuu uuuu	uuuu uuuu
CCP2CON	6X27	6X22	8X27	8X22	0000 0000	0000 0000	uuuu uuuu
CCPR3H	6X27	6X22	8X27	8X22	xxxx xxxx	uuuu uuuu	uuuu uuuu
CCPR3L	6X27	6X22	8X27	8X22	xxxx xxxx	uuuu uuuu	uuuu uuuu
CCP3CON	6X27	6X22	8X27	8X22	0000 0000	0000 0000	uuuu uuuu
ECCP1AS	6X27	6X22	8X27	8X22	0000 0000	0000 0000	uuuu uuuu
CVRCON	6X27	6X22	8X27	8X22	0000 0000	0000 0000	uuuu uuuu
CMCON	6X27	6X22	8X27	8X22	0000 0111	0000 0111	uuuu uuuu
TMR3H	6X27	6X22	8X27	8X22	xxxx xxxx	uuuu uuuu	uuuu uuuu
TMR3L	6X27	6X22	8X27	8X22	xxxx xxxx	uuuu uuuu	uuuu uuuu
T3CON	6X27	6X22	8X27	8X22	0000 0000	uuuu uuuu	uuuu uuuu
PSPCON	6X27	6X22	8X27	8X22	0000 ----	0000 ----	uuuu ----
SPBRG1	6X27	6X22	8X27	8X22	0000 0000	0000 0000	uuuu uuuu
RCREG1	6X27	6X22	8X27	8X22	0000 0000	0000 0000	uuuu uuuu
TXREG1	6X27	6X22	8X27	8X22	0000 0000	0000 0000	uuuu uuuu
TXSTA1	6X27	6X22	8X27	8X22	0000 0010	0000 0010	uuuu uuuu
RCSTA1	6X27	6X22	8X27	8X22	0000 000x	0000 000x	uuuu uuuu
EEADRH	6X27	6X22	8X27	8X22	---- --00	---- --00	---- --uu
EEADR	6X27	6X22	8X27	8X22	0000 0000	0000 0000	uuuu uuuu
EEDATA	6X27	6X22	8X27	8X22	0000 0000	0000 0000	uuuu uuuu
EECON2	6X27	6X22	8X27	8X22	0000 0000	0000 0000	0000 0000
EECON1	6X27	6X22	8X27	8X22	xx-0 x000	uu-0 u000	uu-u uuuu

Legend: u = unchanged, x = unknown, - = unimplemented bit, read as '0', q = value depends on condition.
Shaded cells indicate conditions do not apply for the designated device.

Note 1: One or more bits in the INTCONx or PIRx registers will be affected (to cause wake-up).

2: When the wake-up is due to an interrupt and the GIEL or GIEH bit is set, the PC is loaded with the interrupt vector (0008h or 0018h).

3: When the wake-up is due to an interrupt and the GIEL or GIEH bit is set, the TOSU, TOSH and TOSL are updated with the current value of the PC. The STKPTR is modified to point to the next location in the hardware stack.

4: See Table 4-3 for Reset value for specific condition.

5: Bits 6 and 7 of PORTA, LATA and TRISA are enabled, depending on the oscillator mode selected. When not enabled as PORTA pins, they are disabled and read '0'.

TABLE 4-4: INITIALIZATION CONDITIONS FOR ALL REGISTERS (CONTINUED)

Register	Applicable Devices				Power-on Reset, Brown-out Reset	$\overline{\text{MCLR}}$ Resets, WDT Reset, RESET Instruction, Stack Resets	Wake-up via WDT or Interrupt
IPR3	6X27	6X22	8X27	8X22	1111 1111	1111 1111	uuuu uuuu
PIR3	6X27	6X22	8X27	8X22	0000 0000	0000 0000	uuuu uuuu(1)
PIE3	6X27	6X22	8X27	8X22	0000 0000	0000 0000	uuuu uuuu
IPR2	6X27	6X22	8X27	8X22	11-1 1111	11-1 1111	uu-u uuuu
PIR2	6X27	6X22	8X27	8X22	00-0 0000	00-0 0000	uu-u uuuu(1)
PIE2	6X27	6X22	8X27	8X22	00-0 0000	00-0 0000	uu-u uuuu
IPR1	6X27	6X22	8X27	8X22	1111 1111	1111 1111	uuuu uuuu
PIR1	6X27	6X22	8X27	8X22	0000 0000	0000 0000	uuuu uuuu(1)
PIE1	6X27	6X22	8X27	8X22	0000 0000	0000 0000	uuuu uuuu
MEMCON	6X27	6X22	8X27	8X22	0-00 --00	0-00 --00	u-uu --uu
OSCTUNE	6X27	6X22	8X27	8X22	00-0 0000	00-0 0000	uu-u uuuu
TRISJ	6X27	6X22	8X27	8X22	1111 1111	1111 1111	uuuu uuuu
TRISH	6X27	6X22	8X27	8X22	1111 1111	1111 1111	uuuu uuuu
TRISG	6X27	6X22	8X27	8X22	---1 1111	---1 1111	---u uuuu
TRISF	6X27	6X22	8X27	8X22	1111 1111	1111 1111	uuuu uuuu
TRISE	6X27	6X22	8X27	8X22	1111 1111	1111 1111	uuuu uuuu
TRISD	6X27	6X22	8X27	8X22	1111 1111	1111 1111	uuuu uuuu
TRISC	6X27	6X22	8X27	8X22	1111 1111	1111 1111	uuuu uuuu
TRISB	6X27	6X22	8X27	8X22	1111 1111	1111 1111	uuuu uuuu
TRISA(5)	6X27	6X22	8X27	8X22	1111 1111(5)	1111 1111(5)	uuuu uuuu(5)
LATJ	6X27	6X22	8X27	8X22	xxxx xxxx	uuuu uuuu	uuuu uuuu
LATH	6X27	6X22	8X27	8X22	xxxx xxxx	uuuu uuuu	uuuu uuuu
LATG	6X27	6X22	8X27	8X22	--xx xxxx	--uu uuuu	--uu uuuu
LATF	6X27	6X22	8X27	8X22	xxxx xxxx	uuuu uuuu	uuuu uuuu
LATE	6X27	6X22	8X27	8X22	xxxx xxxx	uuuu uuuu	uuuu uuuu
LATD	6X27	6X22	8X27	8X22	xxxx xxxx	uuuu uuuu	uuuu uuuu
LATC	6X27	6X22	8X27	8X22	xxxx xxxx	uuuu uuuu	uuuu uuuu
LATB	6X27	6X22	8X27	8X22	xxxx xxxx	uuuu uuuu	uuuu uuuu
LATA(5)	6X27	6X22	8X27	8X22	xxxx xxxx(5)	uuuu uuuu(5)	uuuu uuuu(5)
PORTJ	6X27	6X22	8X27	8X22	xxxx xxxx	uuuu uuuu	uuuu uuuu
PORTH	6X27	6X22	8X27	8X22	0000 xxxx	uuuu uuuu	uuuu uuuu
PORTG	6X27	6X22	8X27	8X22	--xx xxxx	--uu uuuu	--uu uuuu
PORTF	6X27	6X22	8X27	8X22	x000 0000	u000 0000	uuuu uuuu
PORTE	6X27	6X22	8X27	8X22	xxxx xxxx	uuuu uuuu	uuuu uuuu
PORTD	6X27	6X22	8X27	8X22	xxxx xxxx	uuuu uuuu	uuuu uuuu
PORTC	6X27	6X22	8X27	8X22	xxxx xxxx	uuuu uuuu	uuuu uuuu
PORTB	6X27	6X22	8X27	8X22	xxxx xxxx	uuuu uuuu	uuuu uuuu

Legend: u = unchanged, x = unknown, - = unimplemented bit, read as '0', q = value depends on condition.
Shaded cells indicate conditions do not apply for the designated device.

Note 1: One or more bits in the INTCONx or PIRx registers will be affected (to cause wake-up).

2: When the wake-up is due to an interrupt and the GIEL or GIEH bit is set, the PC is loaded with the interrupt vector (0008h or 0018h).

3: When the wake-up is due to an interrupt and the GIEL or GIEH bit is set, the TOSU, TOSH and TOSL are updated with the current value of the PC. The STKPTR is modified to point to the next location in the hardware stack.

4: See Table 4-3 for Reset value for specific condition.

5: Bits 6 and 7 of PORTA, LATA and TRISA are enabled, depending on the oscillator mode selected. When not enabled as PORTA pins, they are disabled and read '0'.

© 2008 Microchip Technology Inc.

TABLE 4-4: INITIALIZATION CONDITIONS FOR ALL REGISTERS (CONTINUED)

Register	Applicable Devices				Power-on Reset, Brown-out Reset	$\overline{\text{MCLR}}$ Resets, WDT Reset, RESET Instruction, Stack Resets	Wake-up via WDT or Interrupt
PORTA(5)	6X27	6X22	8X27	8X22	xx0x 0000(5)	uu0u 0000(5)	uuuu uuuu(5)
SPBRGH1	6X27	6X22	8X27	8X22	0000 0000	0000 0000	uuuu uuuu
BAUDCON1	6X27	6X22	8X27	8X22	01-0 0-00	01-0 0-00	uu-u u-uu
SPBRGH2	6X27	6X22	8X27	8X22	0000 0000	0000 0000	uuuu uuuu
BAUDCON2	6X27	6X22	8X27	8X22	01-0 0-00	01-0 0-00	uu-u u-uu
ECCP1DEL	6X27	6X22	8X27	8X22	0000 0000	0000 0000	uuuu uuuu
TMR4	6X27	6X22	8X27	8X22	0000 0000	0000 0000	uuuu uuuu
PR4	6X27	6X22	8X27	8X22	1111 1111	uuuu uuuu	uuuu uuuu
T4CON	6X27	6X22	8X27	8X22	-000 0000	-000 0000	-uuu uuuu
CCPR4H	6X27	6X22	8X27	8X22	xxxx xxxx	uuuu uuuu	uuuu uuuu
CCPR4L	6X27	6X22	8X27	8X22	xxxx xxxx	uuuu uuuu	uuuu uuuu
CCP4CON	6X27	6X22	8X27	8X22	--00 0000	--00 0000	--uu uuuu
CCPR5H	6X27	6X22	8X27	8X22	xxxx xxxx	uuuu uuuu	uuuu uuuu
CCPR5L	6X27	6X22	8X27	8X22	xxxx xxxx	uuuu uuuu	uuuu uuuu
CCP5CON	6X27	6X22	8X27	8X22	--00 0000	--00 0000	--uu uuuu
SPBRG2	6X27	6X22	8X27	8X22	0000 0000	0000 0000	uuuu uuuu
RCREG2	6X27	6X22	8X27	8X22	0000 0000	0000 0000	uuuu uuuu
TXREG2	6X27	6X22	8X27	8X22	0000 0000	0000 0000	uuuu uuuu
TXSTA2	6X27	6X22	8X27	8X22	0000 0010	0000 0010	uuuu uuuu
RCSTA2	6X27	6X22	8X27	8X22	0000 000x	0000 000x	uuuu uuuu
ECCP3AS	6X27	6X22	8X27	8X22	0000 0000	0000 0000	uuuu uuuu
ECCP3DEL	6X27	6X22	8X27	8X22	0000 0000	0000 0000	uuuu uuuu
ECCP2AS	6X27	6X22	8X27	8X22	0000 0000	0000 0000	uuuu uuuu
ECCP2DEL	6X27	6X22	8X27	8X22	0000 0000	0000 0000	uuuu uuuu
SSP2BUF	6X27	6X22	8X27	8X22	xxxx xxxx	uuuu uuuu	uuuu uuuu
SSP2ADD	6X27	6X22	8X27	8X22	0000 0000	0000 0000	uuuu uuuu
SSP2STAT	6X27	6X22	8X27	8X22	0000 0000	0000 0000	uuuu uuuu
SSP2CON1	6X27	6X22	8X27	8X22	0000 0000	0000 0000	uuuu uuuu
SSP2CON2	6X27	6X22	8X27	8X22	0000 0000	0000 0000	uuuu uuuu

Legend: u = unchanged, x = unknown, - = unimplemented bit, read as '0', q = value depends on condition.
Shaded cells indicate conditions do not apply for the designated device.

Note 1: One or more bits in the INTCONx or PIRx registers will be affected (to cause wake-up).

2: When the wake-up is due to an interrupt and the GIEL or GIEH bit is set, the PC is loaded with the interrupt vector (0008h or 0018h).

3: When the wake-up is due to an interrupt and the GIEL or GIEH bit is set, the TOSU, TOSH and TOSL are updated with the current value of the PC. The STKPTR is modified to point to the next location in the hardware stack.

4: See Table 4-3 for Reset value for specific condition.

5: Bits 6 and 7 of PORTA, LATA and TRISA are enabled, depending on the oscillator mode selected. When not enabled as PORTA pins, they are disabled and read '0'.

NOTES:

© 2008 Microchip Technology Inc.

5.0 MEMORY ORGANIZATION

There are three types of memory in PIC18 Enhanced microcontroller devices:

- Program Memory
- Data RAM
- Data EEPROM

As Harvard architecture devices, the data and program memories use separate busses; this allows for concurrent access of the two memory spaces. The data EEPROM, for practical purposes, can be regarded as a peripheral device, since it is addressed and accessed through a set of control registers.

Additional detailed information on the operation of the Flash program memory is provided in **Section 6.0 "Flash Program Memory"**. Data EEPROM is discussed separately in **Section 8.0 "Data EEPROM Memory"**.

5.1 Program Memory Organization

PIC18 microcontrollers implement a 21-bit program counter, which is capable of addressing a 2-Mbyte program memory space. Accessing a location between the upper boundary of the physically implemented memory and the 2-Mbyte address will return all '0's (a NOP instruction).

The PIC18F6527 and PIC18F8527 each have 48 Kbytes of Flash memory and can store up to 24,576 single-word instructions.

The PIC18F6622 and PIC18F8622 each have 64 Kbytes of Flash memory and can store up to 32,768 single-word instructions.

The PIC18F6627 and PIC18F8627 each have 96 Kbytes of Flash memory and can store up to 49,152 single-word instructions.

The PIC18F6722 and PIC18F8722 each have 128 Kbytes of Flash memory and can store up to 65,536 single-word instructions.

PIC18 devices have two interrupt vectors. The Reset vector address is at 0000h and the interrupt vector addresses are at 0008h and 0018h.

The program memory map for the PIC18F8722 family of devices is shown in Figure 5-1.

5.1.1 PIC18F8527/8622/8627/8722 PROGRAM MEMORY MODES

PIC18F8527/8622/8627/8722 devices differ significantly from their PIC18 predecessors in their utilization of program memory. In addition to available on-chip Flash program memory, these controllers can also address up to 2 Mbytes of external program memory through the external memory interface. There are four distinct operating modes available to the controllers:

- Microprocessor (MP)
- Microprocessor with Boot Block (MPBB)
- Extended Microcontroller (EMC)
- Microcontroller (MC)

The program memory mode is determined by setting the two Least Significant bits of the Configuration Register 3L (CONFIG3L) as shown in Register 25-4 (see **Section 25.1 "Configuration Bits"** for additional details on the device Configuration bits).

The program memory modes operate as follows:

- The **Microprocessor Mode** permits access only to external program memory; the contents of the on-chip Flash memory are ignored. The 21-bit program counter permits access to a 2-Mbyte linear program memory space.
- The **Microprocessor with Boot Block Mode** accesses on-chip Flash memory from the boot block. Above this, external program memory is accessed all the way up to the 2-Mbyte limit. Program execution automatically switches between the two memories as required. The boot block is configurable to 1, 2 or 4 Kbytes.
- The **Microcontroller Mode** accesses only on-chip Flash memory. Attempts to read above the physical limit of the on-chip Flash (0BFFFh for the PIC18F8527, 0FFFFh for the PIC18F8622, 17FFFh for the PIC18F8627, 1FFFFh for the PIC18F8722) causes a read of all '0's (a NOP instruction).
  The Microcontroller mode is also the only operating mode available to PIC18F6527/6622/6627/6722 devices.
- The **Extended Microcontroller Mode** allows access to both internal and external program memories as a single block. The device can access its entire on-chip Flash memory; above this, the device accesses external program memory up to the 2-Mbyte program space limit. As with Boot Block mode, execution automatically switches between the two memories as required.

In all modes, the microcontroller has complete access to data RAM and EEPROM.

Figure 5-2 compares the memory maps of the different program memory modes. The differences between on-chip and external memory access limitations are more fully explained in Table 5-1.

FIGURE 5-1: PROGRAM MEMORY MAP AND STACK FOR PIC18F8722 FAMILY DEVICES

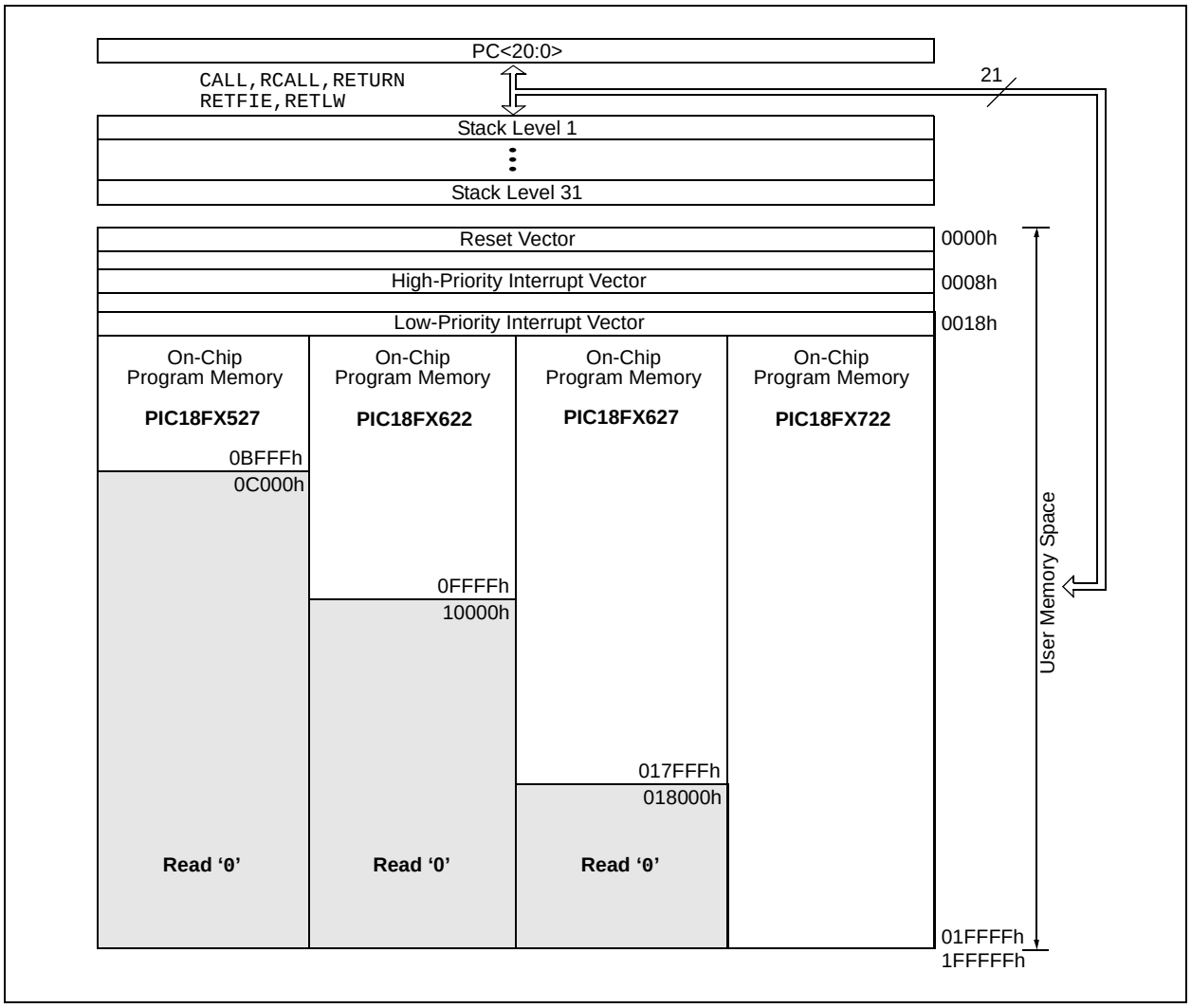

TABLE 5-1: MEMORY ACCESS FOR PIC18F8527/8622/8627/8722 PROGRAM MEMORY MODES

Operating Mode	Internal Program Memory			External Program Memory		
	Execution From	Table Read From	Table Write To	Execution From	Table Read From	Table Write To
Microprocessor	No Access	No Access	No Access	Yes	Yes	Yes
Microprocessor w/ Boot Block	Yes	Yes	Yes	Yes	Yes	Yes
Microcontroller	Yes	Yes	Yes	No Access	No Access	No Access
Extended Microcontroller	Yes	Yes	Yes	Yes	Yes	Yes

© 2008 Microchip Technology Inc.

FIGURE 5-2: MEMORY MAPS FOR PIC18F8722 FAMILY PROGRAM MEMORY MODES

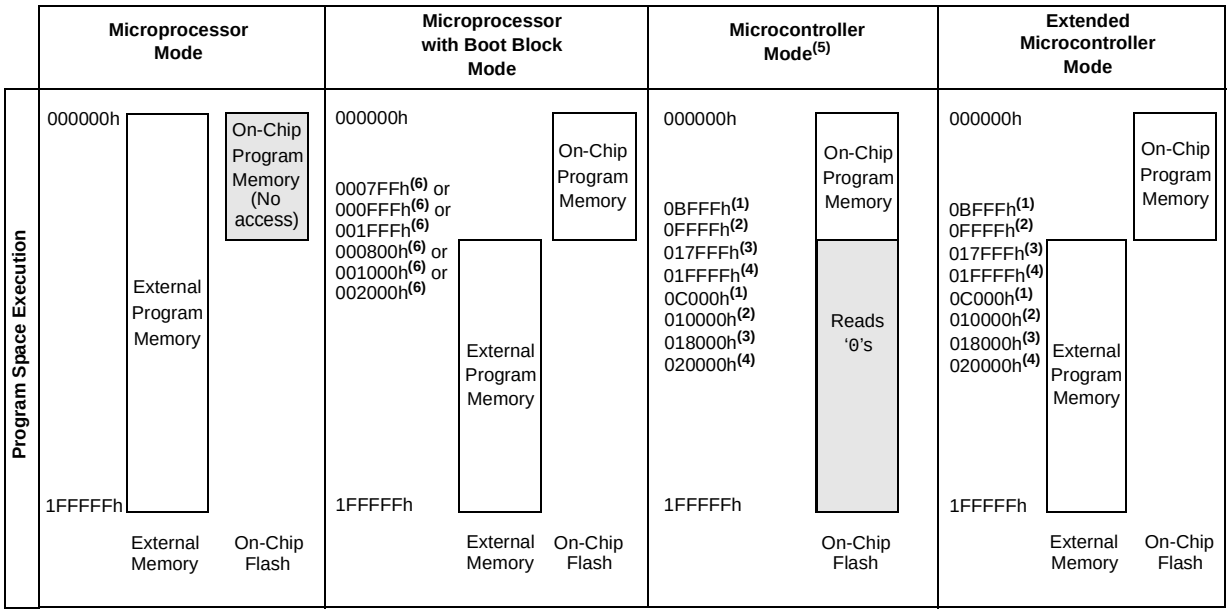

Note 1: PIC18F6527 and PIC18F8527.
2: PIC18F6622 and PIC18F8622.
3: PIC18F6627 and PIC18F8627.
4: PIC18F6722 and PIC18F8722.
5: This is the **only** mode available on PIC18F6527/6622/6627/6722 devices.
6: Boot block size is determined by the BBSIZ<1:0> bits in CONFIG4L.

5.1.2 PROGRAM COUNTER

The Program Counter (PC) specifies the address of the instruction to fetch for execution. The PC is 21 bits wide and is contained in three separate 8-bit registers. The low byte, known as the PCL register, is both readable and writable. The high byte, or PCH register, contains the PC<15:8> bits; it is not directly readable or writable. Updates to the PCH register are performed through the PCLATH register. The upper byte is called PCU. This register contains the PC<20:16> bits; it is also not directly readable or writable. Updates to the PCU register are performed through the PCLATU register.

The contents of PCLATH and PCLATU are transferred to the program counter by any operation that writes PCL. Similarly, the upper two bytes of the program counter are transferred to PCLATH and PCLATU by an operation that reads PCL. This is useful for computed offsets to the PC (see **Section 5.1.5.1 "Computed GOTO"**).

The PC addresses bytes in the program memory. To prevent the PC from becoming misaligned with word instructions, the Least Significant bit of PCL is fixed to a value of '0'. The PC increments by 2 to address sequential instructions in the program memory.

The CALL, RCALL, GOTO and program branch instructions write to the program counter directly. For these instructions, the contents of PCLATH and PCLATU are not transferred to the program counter.

5.1.3 RETURN ADDRESS STACK

The return address stack allows any combination of up to 31 program calls and interrupts to occur. The PC is pushed onto the stack when a CALL or RCALL instruction is executed or an interrupt is Acknowledged. The PC value is pulled off the stack on a RETURN, RETLW or a RETFIE instruction. PCLATU and PCLATH are not affected by any of the RETURN or CALL instructions.

The stack operates as a 31-word by 21-bit RAM and a 5-bit Stack Pointer, STKPTR. The stack space is not part of either program or data space. The Stack Pointer is readable and writable and the address on the top of the stack is readable and writable through the top-of-stack Special File Registers. Data can also be pushed to, or popped from the stack, using these registers.

A CALL type instruction causes a push onto the stack; the Stack Pointer is first incremented and the location pointed to by the Stack Pointer is written with the contents of the PC (already pointing to the instruction following the CALL). A RETURN type instruction causes a POP from the stack; the contents of the location pointed to by the STKPTR are transferred to the PC and then the Stack Pointer is decremented.

The Stack Pointer is initialized to '00000' after all Resets. There is no RAM associated with the location corresponding to a Stack Pointer value of '00000'; this is only a Reset value. Status bits indicate if the stack is full or has overflowed or has underflowed.

5.1.3.1 Top-of-Stack Access

Only the top of the return address stack (TOS) is readable and writable. A set of three registers, TOSU:TOSH:TOSL, hold the contents of the stack location pointed to by the STKPTR register (Figure 5-3). This allows users to implement a software stack if necessary. After a CALL, RCALL or interrupt, the software can read the pushed value by reading the TOSU:TOSH:TOSL registers. These values can be placed on a user defined software stack. At return time, the software can return these values to TOSU:TOSH:TOSL and do a return.

The user must disable the global interrupt enable bits while accessing the stack to prevent inadvertent stack corruption.

FIGURE 5-3: RETURN ADDRESS STACK AND ASSOCIATED REGISTERS

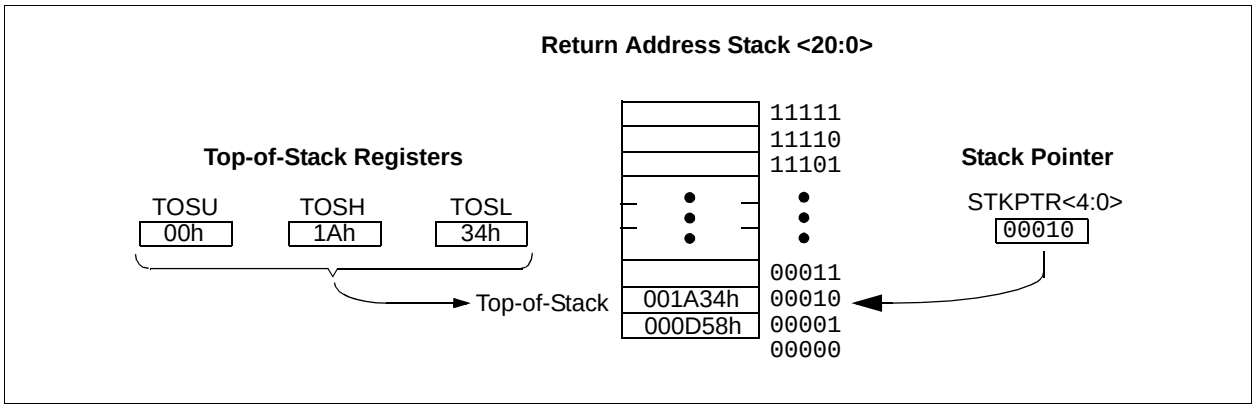

© 2008 Microchip Technology Inc.

5.1.3.2 Return Stack Pointer (STKPTR)

The STKPTR register (Register 5-1) contains the Stack Pointer value, the STKFUL (Stack Full) status bit and the STKUNF (Stack Underflow) status bits. The value of the Stack Pointer can be 0 through 31. The Stack Pointer increments before values are pushed onto the stack and decrements after values are popped off the stack. On Reset, the Stack Pointer value will be zero. The user may read and write the Stack Pointer value. This feature can be used by a Real-Time Operating System (RTOS) for return stack maintenance.

After the PC is pushed onto the stack 31 times (without popping any values off the stack), the STKFUL bit is set. The STKFUL bit is cleared by software or by a POR.

The action that takes place when the stack becomes full depends on the state of the STVREN (Stack Overflow Reset Enable) Configuration bit. (Refer to **Section 25.1 "Configuration Bits"** for a description of the device Configuration bits.) If STVREN is set (default), the 31st PUSH will push the (PC + 2) value onto the stack, set the STKFUL bit and reset the device. The STKFUL bit will remain set and the Stack Pointer will be set to zero.

If STVREN is cleared, the STKFUL bit will be set on the 31st PUSH and the Stack Pointer will increment to 31. Any additional pushes will not overwrite the 31st PUSH and STKPTR will remain at 31.

When the stack has been popped enough times to unload the stack, the next POP will return a value of zero to the PC and set the STKUNF bit, while the Stack Pointer remains at zero. The STKUNF bit will remain set until cleared by software or until a POR occurs.

> **Note:** Returning a value of zero to the PC on an underflow has the effect of vectoring the program to the Reset vector, where the stack conditions can be verified and appropriate actions can be taken. This is not the same as a Reset, as the contents of the SFRs are not affected.

5.1.3.3 PUSH and POP Instructions

Since the Top-of-Stack is readable and writable, the ability to push values onto the stack and pull values off the stack without disturbing normal program execution is a desirable feature. The PIC18 instruction set includes two instructions, PUSH and POP, that permit the TOS to be manipulated under software control. TOSU, TOSH and TOSL can be modified to place data or a return address on the stack.

The PUSH instruction places the current PC value onto the stack. This increments the Stack Pointer and loads the current PC value onto the stack.

The POP instruction discards the current TOS by decrementing the Stack Pointer. The previous value pushed onto the stack then becomes the TOS value.

REGISTER 5-1: STKPTR: STACK POINTER REGISTER

R/C-0	R/C-0	U-0	R/W-0	R/W-0	R/W-0	R/W-0	R/W-0
STKFUL(1)	STKUNF(1)	—	SP4	SP3	SP2	SP1	SP0
bit 7							bit 0

Legend:			
R = Readable bit	W = Writable bit	U = Unimplemented bit, read as '0'	
-n = Value at POR	'1' = Bit is set	'0' = Bit is cleared	x = Bit is unknown

bit 7 **STKFUL:** Stack Full Flag bit(1)
1 = Stack became full or overflowed
0 = Stack has not become full or overflowed

bit 6 **STKUNF:** Stack Underflow Flag bit(1)
1 = Stack underflow occurred
0 = Stack underflow did not occur

bit 5 **Unimplemented:** Read as '0'

bit 4-0 **SP<4:0>:** Stack Pointer Location bits

Note 1: Bit 7 and bit 6 are cleared by user software or by a POR.

5.1.3.4 Stack Full and Underflow Resets

Device Resets on stack overflow and stack underflow conditions are enabled by setting the STVREN bit in Configuration Register 4L. When STVREN is set, a full or underflow will set the appropriate STKFUL or STKUNF bit and then cause a device Reset. When STVREN is cleared, a full or underflow condition will set the appropriate STKFUL or STKUNF bit, but not cause a device Reset. The STKFUL or STKUNF bits are cleared by the user software or a Power-on Reset.

5.1.4 FAST REGISTER STACK

A fast register stack is provided for the STATUS, WREG and BSR registers, to provide a “fast return” option for interrupts. The stack for each register is only one level deep and is neither readable nor writable. It is loaded with the current value of the corresponding register when the processor vectors for an interrupt. All interrupt sources will push values into the Stack registers. The values in the registers are then loaded back into their associated registers if the `RETFIE, FAST` instruction is used to return from the interrupt.

If both low and high-priority interrupts are enabled, the stack registers cannot be used reliably to return from low-priority interrupts. If a high-priority interrupt occurs while servicing a low-priority interrupt, the Stack register values stored by the low-priority interrupt will be overwritten. In these cases, users must save the key registers in software during a low-priority interrupt.

If interrupt priority is not used, all interrupts may use the fast register stack for returns from interrupt. If no interrupts are used, the fast register stack can be used to restore the STATUS, WREG and BSR registers at the end of a subroutine call. To use the fast register stack for a subroutine call, a `CALL label, FAST` instruction must be executed to save the STATUS, WREG and BSR registers to the fast register stack. A `RETURN, FAST` instruction is then executed to restore these registers from the fast register stack.

Example 5-1 shows a source code example that uses the fast register stack during a subroutine call and return.

EXAMPLE 5-1: FAST REGISTER STACK CODE EXAMPLE

```
CALL SUB1, FAST     ;STATUS, WREG, BSR
                    ;SAVED IN FAST REGISTER
                    ;STACK
        •
        •
SUB1    •
        •
    RETURN, FAST    ;RESTORE VALUES SAVED
                    ;IN FAST REGISTER STACK
```

5.1.5 LOOK-UP TABLES IN PROGRAM MEMORY

There may be programming situations that require the creation of data structures, or look-up tables, in program memory. For PIC18 devices, look-up tables can be implemented in two ways:

- Computed `GOTO`
- Table Reads

5.1.5.1 Computed `GOTO`

A computed `GOTO` is accomplished by adding an offset to the program counter. An example is shown in Example 5-2.

A look-up table can be formed with an `ADDWF PCL` instruction and a group of `RETLW nn` instructions. The W register is loaded with an offset into the table before executing a call to that table. The first instruction of the called routine is the `ADDWF PCL` instruction. The next instruction executed will be one of the `RETLW nn` instructions that returns the value ‘nn’ to the calling function.

The offset value (in WREG) specifies the number of bytes that the program counter should advance and should be multiples of 2 (LSb = `0`).

In this method, only one data byte may be stored in each instruction location and room on the return address stack is required.

Note:	The “`ADDWF PCL`” instruction does not update the PCLATH and PCLATU registers. A read operation on PCL must be performed to update PCLATH and PCLATU.

EXAMPLE 5-2: COMPUTED `GOTO` USING AN OFFSET VALUE

```
MAIN:  ORG     0x0000
       MOVLW   0x00
       CALL    TABLE
…
       ORG     0x8000
TABLE  MOVF    PCL, F          ; A simple read of PCL will update PCLATH, PCLATU
       RLNCF   W, W            ; Multiply by 2 to get correct offset in table
       ADDWF   PCL             ; Add the modified offset to force jump into table
       RETLW   ‘A’
       RETLW   ‘B’
       RETLW   ‘C’
       RETLW   ‘D’
       RETLW   ‘E’
       END
```


© 2008 Microchip Technology Inc.

5.1.5.2 Table Reads and Table Writes

A better method of storing data in program memory allows two bytes of data to be stored in each instruction location.

Look-up table data may be stored two bytes per program word by using table reads and writes. The Table Pointer (TBLPTR) register specifies the byte address and the Table Latch (TABLAT) register contains the data that is read from or written to program memory. Data is transferred to or from program memory one byte at a time.

Table read and table write operations are discussed further in **Section 6.1 “Table Reads and Table Writes”**.

5.2 PIC18 Instruction Cycle

5.2.1 CLOCKING SCHEME

The microcontroller clock input, whether from an internal or external source, is internally divided by four to generate four non-overlapping quadrature clocks (Q1, Q2, Q3 and Q4). Internally, the program counter is incremented on every Q1; the instruction is fetched from the program memory and latched into the instruction register during Q4. The instruction is decoded and executed during the following Q1 through Q4. The clocks and instruction execution flow are shown in Figure 5-4.

5.2.2 INSTRUCTION FLOW/PIPELINING

An “Instruction Cycle” consists of four Q cycles: Q1 through Q4. The instruction fetch and execute are pipelined in such a manner that a fetch takes one instruction cycle, while the decode and execute take another instruction cycle. However, due to the pipelining, each instruction effectively executes in one cycle. If an instruction causes the program counter to change (e.g., `GOTO`), then two cycles are required to complete the instruction (Example 5-3).

A fetch cycle begins with the program counter incrementing in Q1.

In the execution cycle, the fetched instruction is latched into the Instruction Register (IR) in cycle Q1. This instruction is then decoded and executed during the Q2, Q3 and Q4 cycles. Data memory is read during Q2 (operand read) and written during Q4 (destination write).

FIGURE 5-4: CLOCK/INSTRUCTION CYCLE

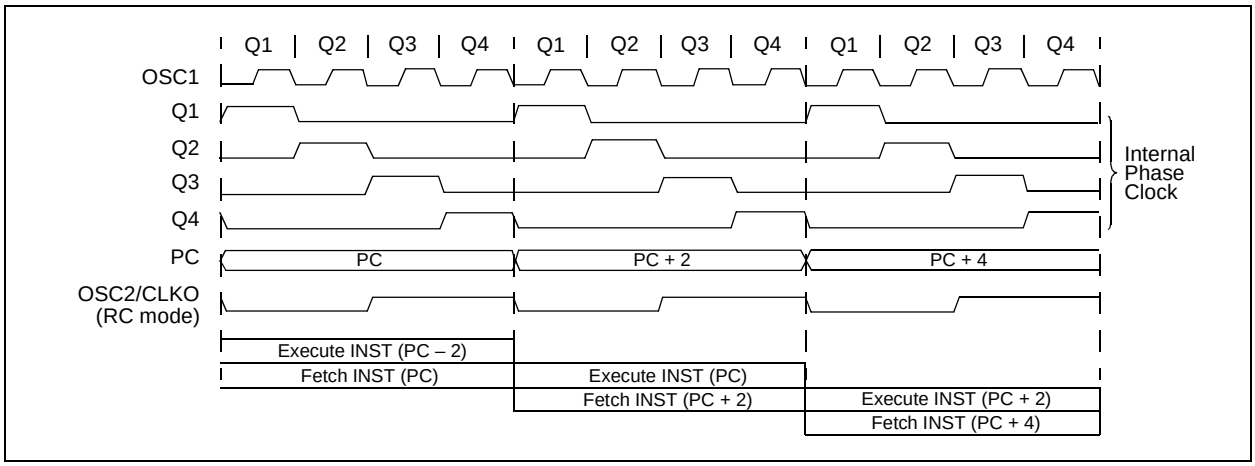

EXAMPLE 5-3: INSTRUCTION PIPELINE FLOW

	TCY0	TCY1	TCY2	TCY3	TCY4	TCY5
1. `MOVLW 55h`	Fetch 1	Execute 1				
2. `MOVWF PORTB`		Fetch 2	Execute 2			
3. `BRA SUB_1`			Fetch 3	Execute 3		
4. `BSF PORTA, BIT3 (Forced NOP)`				Fetch 4	Flush (NOP)	
5. `Instruction @ address SUB_1`					Fetch SUB_1	Execute SUB_1

All instructions are single cycle, except for any program branches. These take two cycles since the fetch instruction is “flushed” from the pipeline while the new instruction is being fetched and then executed.

5.2.3 INSTRUCTIONS IN PROGRAM MEMORY

The program memory is addressed in bytes. Instructions are stored as two bytes or four bytes in program memory. The Least Significant Byte of an instruction word is always stored in a program memory location with an even address (LSb = `0`). To maintain alignment with instruction boundaries, the PC increments in steps of 2 and the LSb will always read '`0`' (see **Section 5.1.2 "Program Counter"**).

Figure 5-5 shows an example of how instruction words are stored in the program memory.

The `CALL` and `GOTO` instructions have the absolute program memory address embedded into the instruction. Since instructions are always stored on word boundaries, the data contained in the instruction is a word address. The word address is written to PC<20:1>, which accesses the desired byte address in program memory. Instruction #2 in Figure 5-5 shows how the instruction `GOTO 0006h` is encoded in the program memory. Program branch instructions, which encode a relative address offset, operate in the same manner. The offset value stored in a branch instruction represents the number of single-word instructions that the PC will be offset by. **Section 26.0 "Instruction Set Summary"** provides further details of the instruction set.

FIGURE 5-5: INSTRUCTIONS IN PROGRAM MEMORY

Program Memory Byte Locations →

			LSB = 1	LSB = 0	Word Address ↓
					000000h
					000002h
					000004h
					000006h
Instruction 1:	MOVLW	055h	0Fh	55h	000008h
Instruction 2:	GOTO	0006h	EFh	03h	00000Ah
			F0h	00h	00000Ch
Instruction 3:	MOVFF	123h, 456h	C1h	23h	00000Eh
			F4h	56h	000010h
					000012h
					000014h

© 2008 Microchip Technology Inc.

5.2.4 TWO-WORD INSTRUCTIONS

The standard PIC18 instruction set has 8 two-word instructions: CALL, MOVFF, GOTO, LSFR, ADDULNK, CALLW, MOVSS and SUBULNK. In all cases, the second word of the instructions always has '1111' as its four Most Significant bits; the other 12 bits are literal data, usually a data memory address.

The use of '1111' in the 4 MSbs of an instruction specifies a special form of NOP. If the instruction is executed in proper sequence – immediately after the first word – the data in the second word is accessed and used by the instruction sequence. If the first word is skipped for some reason and the second word is executed by itself, a NOP is executed instead. This is necessary for cases when the two-word instruction is preceded by a conditional instruction that changes the PC. Example 5-4 shows how this works.

Note:	See **Section 5.6 "PIC18 Instruction Execution and the Extended Instruction Set"** for information on two-word instructions in the extended instruction set.

EXAMPLE 5-4: TWO-WORD INSTRUCTIONS

CASE 1:			
Object Code	**Source Code**		
0110 0110 0000 0000	TSTFSZ	REG1	; is RAM location 0?
1100 0001 0010 0011	MOVFF	REG1, REG2	; No, skip this word
1111 0100 0101 0110			; Execute this word as a NOP
0010 0100 0000 0000	ADDWF	REG3	; continue code
CASE 2:			
Object Code	**Source Code**		
0110 0110 0000 0000	TSTFSZ	REG1	; is RAM location 0?
1100 0001 0010 0011	MOVFF	REG1, REG2	; Yes, execute this word
1111 0100 0101 0110			; 2nd word of instruction
0010 0100 0000 0000	ADDWF	REG3	; continue code

5.3 Data Memory Organization

Note:	The operation of some aspects of data memory are changed when the PIC18 extended instruction set is enabled. See **Section 5.5 "Data Memory and the Extended Instruction Set"** for more information.

The data memory in PIC18 devices is implemented as static RAM. Each register in the data memory has a 12-bit address, allowing up to 4096 bytes of data memory. The memory space is divided into as many as 16 banks that contain 256 bytes each; the PIC18F8722 family of devices implements all 16 banks. Figure 5-6 shows the data memory organization for the PIC18F8722 family of devices.

The data memory contains Special Function Registers (SFRs) and General Purpose Registers (GPRs). The SFRs are used for control and status of the controller and peripheral functions, while GPRs are used for data storage and scratchpad operations in the user's application. Any read of an unimplemented location will read as '0's.

The instruction set and architecture allow operations across all banks. The entire data memory may be accessed by Direct, Indirect or Indexed Addressing modes. Addressing modes are discussed later in this subsection.

To ensure that commonly used registers (SFRs and select GPRs) can be accessed in a single cycle, PIC18 devices implement an Access Bank. This is a 256-byte memory space that provides fast access to SFRs and the lower portion of GPR Bank 0 without using the BSR. **Section 5.3.2 "Access Bank"** provides a detailed description of the Access RAM.

5.3.1 BANK SELECT REGISTER (BSR)

Large areas of data memory require an efficient addressing scheme to make rapid access to any address possible. Ideally, this means that an entire address does not need to be provided for each read or write operation. For PIC18 devices, this is accomplished with a RAM banking scheme. This divides the memory space into 16 contiguous banks of 256 bytes. Depending on the instruction, each location can be addressed directly by its full 12-bit address, or an 8-bit low-order address and a 4-bit Bank Pointer.

Most instructions in the PIC18 instruction set make use of the Bank Pointer, known as the Bank Select Register (BSR). This SFR holds the 4 Most Significant bits of a location's address; the instruction itself includes the 8 Least Significant bits. Only the four lower bits of the BSR are implemented (BSR<3:0>). The upper four bits are unused; they will always read '0' and cannot be written to. The BSR can be loaded directly by using the MOVLB instruction.

The value of the BSR indicates the bank in data memory; the 8 bits in the instruction show the location in the bank and can be thought of as an offset from the bank's lower boundary. The relationship between the BSR's value and the bank division in data memory is shown in Figure 5-7.

Since up to 16 registers may share the same low-order address, the user must always be careful to ensure that the proper bank is selected before performing a data read or write. For example, writing what should be program data to an 8-bit address of F9h while the BSR is 0Fh will end up resetting the program counter.

While any bank can be selected, only those banks that are actually implemented can be read or written to. Writes to unimplemented banks are ignored, while reads from unimplemented banks will return '0's. Even so, the STATUS register will still be affected as if the operation was successful. The data memory map in Figure 5-6 indicates which banks are implemented.

In the core PIC18 instruction set, only the MOVFF instruction fully specifies the 12-bit address of the source and target registers. This instruction ignores the BSR completely when it executes. All other instructions include only the low-order address as an operand and must use either the BSR or the Access Bank to locate their target registers.

© 2008 Microchip Technology Inc.

FIGURE 5-6: DATA MEMORY MAP FOR THE PIC18F8722 FAMILY OF DEVICES

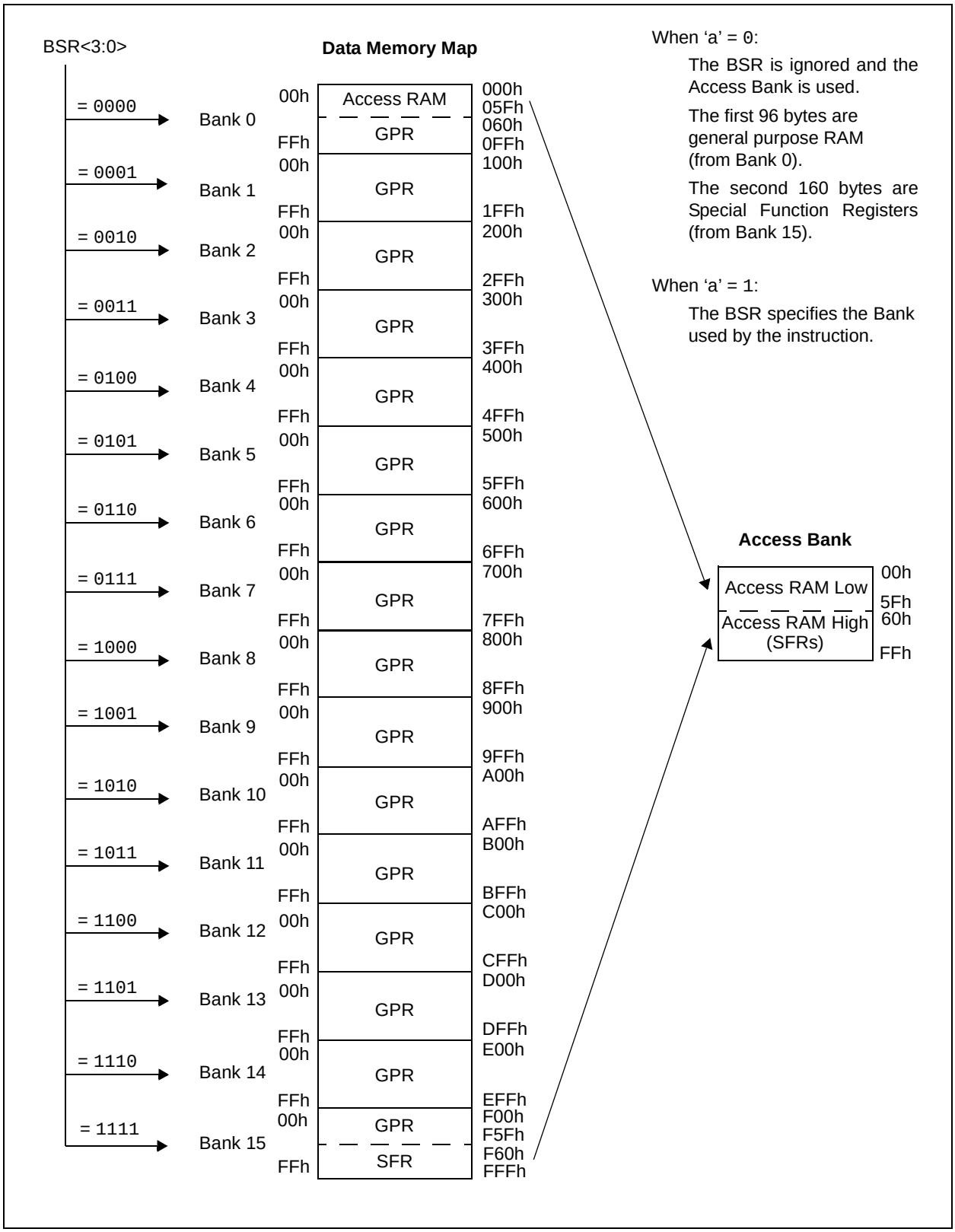

FIGURE 5-7: USE OF THE BANK SELECT REGISTER (DIRECT ADDRESSING)

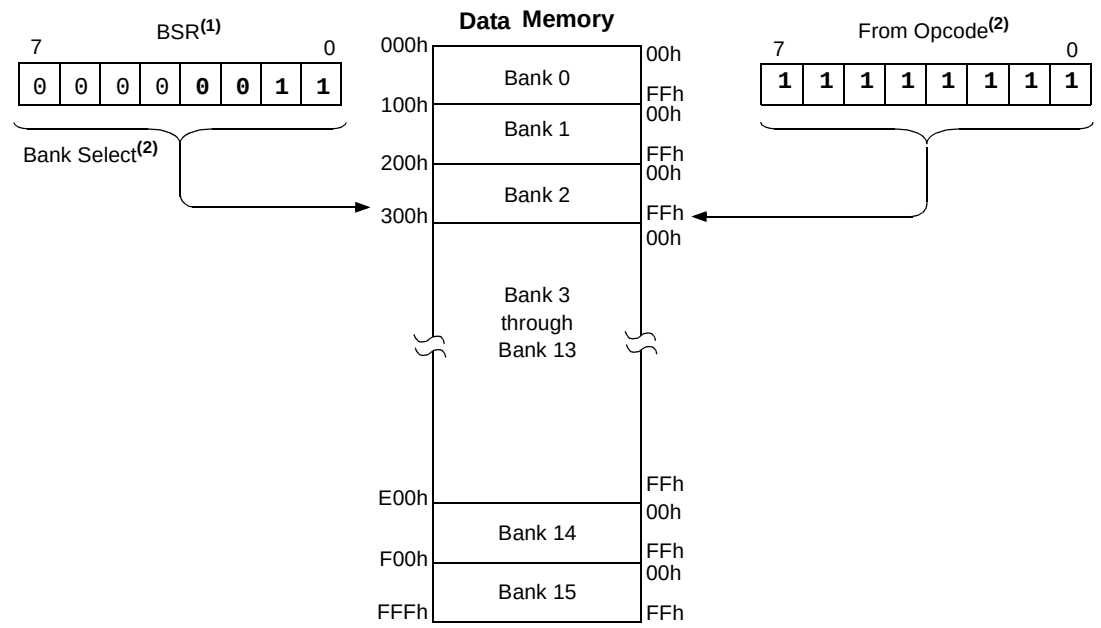

Note 1: The Access RAM bit of the instruction can be used to force an override of the selected bank (BSR<3:0>) to the registers of the Access Bank.

2: The `MOVFF` instruction embeds the entire 12-bit address in the instruction.

5.3.2 ACCESS BANK

While the use of the BSR with an embedded 8-bit address allows users to address the entire range of data memory, it also means that the user must always ensure that the correct bank is selected. Otherwise, data may be read from or written to the wrong location. This can be disastrous if a GPR is the intended target of an operation, but an SFR is written to instead. Verifying and/or changing the BSR for each read or write to data memory can become very inefficient.

To streamline access for the most commonly used data memory locations, the data memory is configured with an Access Bank, which allows users to access a mapped block of memory without specifying a BSR. The Access Bank consists of the first 96 bytes of memory (00h-5Fh) in Bank 0 and the last 160 bytes of memory (60h-FFh) in Block 15. The lower half is known as the “Access RAM” and is composed of GPRs. This upper half is also where the device’s SFRs are mapped. These two areas are mapped contiguously in the Access Bank and can be addressed in a linear fashion by an 8-bit address (Figure 5-6).

The Access Bank is used by core PIC18 instructions that include the Access RAM bit (the ‘a’ parameter in the instruction). When ‘a’ is equal to ‘`1`’, the instruction uses the BSR and the 8-bit address included in the opcode for the data memory address. When ‘a’ is ‘`0`’, however, the instruction is forced to use the Access Bank address map; the current value of the BSR is ignored entirely.

Using this “forced” addressing allows the instruction to operate on a data address in a single cycle, without updating the BSR first. For 8-bit addresses of 60h and above, this means that users can evaluate and operate on SFRs more efficiently. The Access RAM below 60h is a good place for data values that the user might need to access rapidly, such as immediate computational results or common program variables. Access RAM also allows for faster and more code efficient context saving and switching of variables.

The mapping of the Access Bank is slightly different when the extended instruction set is enabled (XINST Configuration bit = `1`). This is discussed in more detail in **Section 5.5.3 “Mapping the Access Bank in Indexed Literal Offset Mode”**.

5.3.3 GENERAL PURPOSE REGISTER FILE

PIC18 devices may have banked memory in the GPR area. This is data RAM, which is available for use by all instructions. GPRs start at the bottom of Bank 0 (address 000h) and grow upwards towards the bottom of the SFR area. GPRs are not initialized by a Power-on Reset and are unchanged on all other Resets.

© 2008 Microchip Technology Inc.

5.3.4 SPECIAL FUNCTION REGISTERS

The Special Function Registers (SFRs) are registers used by the CPU and peripheral modules for controlling the desired operation of the device. These registers are implemented as static RAM. SFRs start at the top of data memory (FFFh) and extend downward to occupy the top half of Bank 15 (F60h to FFFh). A list of these registers is given in Table 5-2 and Table 5-3.

The SFRs can be classified into two sets: those associated with the “core” device functionality (ALU, Resets and interrupts) and those related to the peripheral functions. The Reset and interrupt registers are described in their respective chapters, while the ALU’s STATUS register is described later in this section. Registers related to the operation of a peripheral feature are described in the chapter for that peripheral.

The SFRs are typically distributed among the peripherals whose functions they control. Unused SFR locations are unimplemented and read as ‘0’s.

TABLE 5-2: SPECIAL FUNCTION REGISTER MAP FOR THE PIC18F8722 FAMILY OF DEVICES

Address	Name	Address	Name	Address	Name	Address	Name	Address	Name
FFFh	TOSU	FDFh	INDF2(1)	FBFh	CCPR1H	F9Fh	IPR1	F7Fh	SPBRGH1
FFEh	TOSH	FDEh	POSTINC2(1)	FBEh	CCPR1L	F9Eh	PIR1	F7Eh	BAUDCON1
FFDh	TOSL	FDDh	POSTDEC2(1)	FBDh	CCP1CON	F9Dh	PIE1	F7Dh	SPBRGH2
FFCh	STKPTR	FDCh	PREINC2(1)	FBCh	CCPR2H	F9Ch	MEMCON	F7Ch	BAUDCON2
FFBh	PCLATU	FDBh	PLUSW2(1)	FBBh	CCPR2L	F9Bh	OSCTUNE	F7Bh	—(2)
FFAh	PCLATH	FDAh	FSR2H	FBAh	CCP2CON	F9Ah	TRISJ(3)	F7Ah	—(2)
FF9h	PCL	FD9h	FSR2L	FB9h	CCPR3H	F99h	TRISH(3)	F79h	ECCP1DEL
FF8h	TBLPTRU	FD8h	STATUS	FB8h	CCPR3L	F98h	TRISG	F78h	TMR4
FF7h	TBLPTRH	FD7h	TMR0H	FB7h	CCP3CON	F97h	TRISF	F77h	PR4
FF6h	TBLPTRL	FD6h	TMR0L	FB6h	ECCP1AS	F96h	TRISE	F76h	T4CON
FF5h	TABLAT	FD5h	T0CON	FB5h	CVRCON	F95h	TRISD	F75h	CCPR4H
FF4h	PRODH	FD4h	—(2)	FB4h	CMCON	F94h	TRISC	F74h	CCPR4L
FF3h	PRODL	FD3h	OSCCON	FB3h	TMR3H	F93h	TRISB	F73h	CCP4CON
FF2h	INTCON	FD2h	HLVDCON	FB2h	TMR3L	F92h	TRISA	F72h	CCPR5H
FF1h	INTCON2	FD1h	WDTCON	FB1h	T3CON	F91h	LATJ(3)	F71h	CCPR5L
FF0h	INTCON3	FD0h	RCON	FB0h	PSPCON	F90h	LATH(3)	F70h	CCP5CON
FEFh	INDF0(1)	FCFh	TMR1H	FAFh	SPBRG1	F8Fh	LATG	F6Fh	SPBRG2
FEEh	POSTINC0(1)	FCEh	TMR1L	FAEh	RCREG1	F8Eh	LATF	F6Eh	RCREG2
FEDh	POSTDEC0(1)	FCDh	T1CON	FADh	TXREG1	F8Dh	LATE	F6Dh	TXREG2
FECh	PREINC0(1)	FCCh	TMR2	FACh	TXSTA1	F8Ch	LATD	F6Ch	TXSTA2
FEBh	PLUSW0(1)	FCBh	PR2	FABh	RCSTA1	F8Bh	LATC	F6Bh	RCSTA2
FEAh	FSR0H	FCAh	T2CON	FAAh	EEADRH	F8Ah	LATB	F6Ah	ECCP3AS
FE9h	FSR0L	FC9h	SSP1BUF	FA9h	EEADR	F89h	LATA	F69h	ECCP3DEL
FE8h	WREG	FC8h	SSP1ADD	FA8h	EEDATA	F88h	PORTJ(3)	F68h	ECCP2AS
FE7h	INDF1(1)	FC7h	SSP1STAT	FA7h	EECON2(1)	F87h	PORTH(3)	F67h	ECCP2DEL
FE6h	POSTINC1(1)	FC6h	SSP1CON1	FA6h	EECON1	F86h	PORTG	F66h	SSP2BUF
FE5h	POSTDEC1(1)	FC5h	SSP1CON2	FA5h	IPR3	F85h	PORTF	F65h	SSP2ADD
FE4h	PREINC1(1)	FC4h	ADRESH	FA4h	PIR3	F84h	PORTE	F64h	SSP2STAT
FE3h	PLUSW1(1)	FC3h	ADRESL	FA3h	PIE3	F83h	PORTD	F63h	SSP2CON1
FE2h	FSR1H	FC2h	ADCON0	FA2h	IPR2	F82h	PORTC	F62h	SSP2CON2
FE1h	FSR1L	FC1h	ADCON1	FA1h	PIR2	F81h	PORTB	F61h	—(2)
FE0h	BSR	FC0h	ADCON2	FA0h	PIE2	F80h	PORTA	F60h	—(2)

Note 1: This is not a physical register.
2: Unimplemented registers are read as ‘0’.
3: This register is not available on 64-pin devices.

TABLE 5-3: REGISTER FILE SUMMARY

File Name	Bit 7	Bit 6	Bit 5	Bit 4	Bit 3	Bit 2	Bit 1	Bit 0	Value on POR, BOR	Details on page:
TOSU	—	—	—	Top-of-Stack Upper Byte (TOS<20:16>)					---0 0000	57, 66
TOSH	Top-of-Stack High Byte (TOS<15:8>)								0000 0000	57, 66
TOSL	Top-of-Stack Low Byte (TOS<7:0>)								0000 0000	57, 66
STKPTR	STKFUL(6)	STKUNF(6)	—	SP4	SP3	SP2	SP1	SP0	00-0 0000	57, 67
PCLATU	—	—	—	Holding Register for PC<20:16>					---0 0000	57, 66
PCLATH	Holding Register for PC<15:8>								0000 0000	57, 66
PCL	PC Low Byte (PC<7:0>)								0000 0000	57, 66
TBLPTRU	—	—	bit 21(7)	Program Memory Table Pointer Upper Byte (TBLPTR<20:16>)					--00 0000	57, 90
TBLPTRH	Program Memory Table Pointer High Byte (TBLPTR<15:8>)								0000 0000	57, 90
TBLPTRL	Program Memory Table Pointer Low Byte (TBLPTR<7:0>)								0000 0000	57, 90
TABLAT	Program Memory Table Latch								0000 0000	57, 90
PRODH	Product Register High Byte								xxxx xxxx	57, 117
PRODL	Product Register Low Byte								xxxx xxxx	57, 117
INTCON	GIE/GIEH	PEIE/GIEL	TMR0IE	INT0IE	RBIE	TMR0IF	INT0IF	RBIF	0000 000x	57, 121
INTCON2	$\overline{\text{RBPU}}$	INTEDG0	INTEDG1	INTEDG2	INTEDG3	TMR0IP	INT3IP	RBIP	1111 1111	57, 122
INTCON3	INT2IP	INT1IP	INT3IE	INT2IE	INT1IE	INT3IF	INT2IF	INT1IF	1100 0000	57, 123
INDF0	Uses contents of FSR0 to address data memory – value of FSR0 not changed (not a physical register)								N/A	57, 82
POSTINC0	Uses contents of FSR0 to address data memory – value of FSR0 post-incremented (not a physical register)								N/A	57, 82
POSTDEC0	Uses contents of FSR0 to address data memory – value of FSR0 post-decremented (not a physical register)								N/A	57, 82
PREINC0	Uses contents of FSR0 to address data memory – value of FSR0 pre-incremented (not a physical register)								N/A	57, 82
PLUSW0	Uses contents of FSR0 to address data memory – value of FSR0 pre-incremented (not a physical register) – value of FSR0 offset by W								N/A	57, 82
FSR0H	—	—	—	—	Indirect Data Memory Address Pointer 0 High				---- 0000	57, 82
FSR0L	Indirect Data Memory Address Pointer 0 Low Byte								xxxx xxxx	57, 82
WREG	Working Register								xxxx xxxx	57
INDF1	Uses contents of FSR1 to address data memory – value of FSR1 not changed (not a physical register)								N/A	57, 82
POSTINC1	Uses contents of FSR1 to address data memory – value of FSR1 post-incremented (not a physical register)								N/A	57, 82
POSTDEC1	Uses contents of FSR1 to address data memory – value of FSR1 post-decremented (not a physical register)								N/A	57, 82
PREINC1	Uses contents of FSR1 to address data memory – value of FSR1 pre-incremented (not a physical register)								N/A	57, 82
PLUSW1	Uses contents of FSR1 to address data memory – value of FSR1 pre-incremented (not a physical register) – value of FSR1 offset by W								N/A	57, 82
FSR1H	—	—	—	—	Indirect Data Memory Address Pointer 1 High				---- 0000	58, 82
FSR1L	Indirect Data Memory Address Pointer 1 Low Byte								xxxx xxxx	58, 82
BSR	—	—	—	—	Bank Select Register				---- 0000	58, 72
INDF2	Uses contents of FSR2 to address data memory – value of FSR2 not changed (not a physical register)								N/A	58, 82
POSTINC2	Uses contents of FSR2 to address data memory – value of FSR2 post-incremented (not a physical register)								N/A	58, 82
POSTDEC2	Uses contents of FSR2 to address data memory – value of FSR2 post-decremented (not a physical register)								N/A	58, 82
PREINC2	Uses contents of FSR2 to address data memory – value of FSR2 pre-incremented (not a physical register)								N/A	58, 82
PLUSW2	Uses contents of FSR2 to address data memory – value of FSR2 pre-incremented (not a physical register) – value of FSR2 offset by W								N/A	58, 82
FSR2H	—	—	—	—	Indirect Data Memory Address Pointer 2 High				---- 0000	58, 82
FSR2L	Indirect Data Memory Address Pointer 2 Low Byte								xxxx xxxx	58, 82

Legend: x = unknown, u = unchanged, - = unimplemented, q = value depends on condition

Note 1: The SBOREN bit is only available when the BOREN<1:0> Configuration bits = 01; otherwise, this bit reads as '0'.

2: These registers and/or bits are not implemented on 64-pin devices and are read as '0'. Reset values are shown for 80-pin devices; individual unimplemented bits should be interpreted as '-'.

3: The PLLEN bit is only available in specific oscillator configuration; otherwise, it is disabled and reads as '0'. See **Section 2.6.4 "PLL in INTOSC Modes"**.

4: RA6/RA7 and their associated latch and direction bits are individually configured as port pins based on various primary oscillator modes. When disabled, these bits read as '0'.

5: RG5 and LATG5 are only available when Master Clear is disabled (MCLRE Configuration bit = 0); otherwise, RG5 and LATG5 read as '0'.

6: Bit 7 and Bit 6 are cleared by user software or by a POR.

7: Bit 21 of TBLPTRU allows access to the device Configuration bits.

© 2008 Microchip Technology Inc.

TABLE 5-3: REGISTER FILE SUMMARY (CONTINUED)

File Name	Bit 7	Bit 6	Bit 5	Bit 4	Bit 3	Bit 2	Bit 1	Bit 0	Value on POR, BOR	Details on page:
STATUS	—	—	—	N	OV	Z	DC	C	---x xxxx	58, 80
TMR0H	Timer0 Register High Byte								0000 0000	58, 163
TMR0L	Timer0 Register Low Byte								xxxx xxxx	58, 163
T0CON	TMR0ON	T08BIT	T0CS	T0SE	PSA	T0PS2	T0PS1	T0PS0	1111 1111	58, 161
OSCCON	IDLEN	IRCF2	IRCF1	IRCF0	OSTS	IOFS	SCS1	SCS0	0100 q000	39, 58
HLVDCON	VDIRMAG	—	IRVST	HLVDEN	HLVDL3	HLVDL2	HLVDL1	HLVDL0	0-00 0101	58, 291
WDTCON	—	—	—	—	—	—	—	SWDTEN	--- ---0	58, 313
RCON	IPEN	SBOREN(1)	—	$\overline{RI}$	$\overline{TO}$	$\overline{PD}$	$\overline{POR}$	$\overline{BOR}$	0q-1 11q0	50, 56, 58, 133
TMR1H	Timer1 Register High Byte								xxxx xxxx	58, 169
TMR1L	Timer1 Register Low Byte								xxxx xxxx	58, 169
T1CON	RD16	T1RUN	T1CKPS1	T1CKPS0	T1OSCEN	$\overline{T1SYNC}$	TMR1CS	TMR1ON	0000 0000	58, 165
TMR2	Timer2 Register								0000 0000	58, 172
PR2	Timer2 Period Register								1111 1111	58, 172
T2CON	—	T2OUTPS3	T2OUTPS2	T2OUTPS1	T2OUTPS0	TMR2ON	T2CKPS1	T2CKPS0	-000 0000	58, 171
SSP1BUF	MSSP1 Receive Buffer/Transmit Register								xxxx xxxx	58, 169, 170
SSP1ADD	MSSP1 Address Register in I^{2}C™ Slave mode. MSSP1 Baud Rate Reload Register in I^{2}C Master mode.								0000 0000	58, 170
SSP1STAT	SMP	CKE	D/$\overline{A}$	P	S	R/$\overline{W}$	UA	BF	0000 0000	58, 162, 171
SSP1CON1	WCOL	SSPOV	SSPEN	CKP	SSPM3	SSPM2	SSPM1	SSPM0	0000 0000	58, 163, 172
SSP1CON2	GCEN	ACKSTAT	ACKDT	ACKEN	RCEN	PEN	RSEN	SEN	0000 0000	58, 173
ADRESH	A/D Result Register High Byte								xxxx xxxx	59, 280
ADRESL	A/D Result Register Low Byte								xxxx xxxx	59, 280
ADCON0	—	—	CHS3	CHS2	CHS1	CHS0	GO/$\overline{DONE}$	ADON	--00 0000	59, 271
ADCON1	—	—	VCFG1	VCFG0	PCFG3	PCFG2	PCFG1	PCFG0	--00 0000	59, 272
ADCON2	ADFM	—	ACQT2	ACQT1	ACQT0	ADCS2	ADCS1	ADCS0	0-00 0000	59, 273
CCPR1H	Enhanced Capture/Compare/PWM Register 1 High Byte								xxxx xxxx	59, 180
CCPR1L	Enhanced Capture/Compare/PWM Register 1 Low Byte								xxxx xxxx	59, 180
CCP1CON	P1M1	P1M0	DC1B1	DC1B0	CCP1M3	CCP1M2	CCP1M1	CCP1M0	0000 0000	59, 187
CCPR2H	Enhanced Capture/Compare/PWM Register 2 High Byte								xxxx xxxx	59, 180
CCPR2L	Enhanced Capture/Compare/PWM Register 2 Low Byte								xxxx xxxx	59, 180
CCP2CON	P2M1	P2M0	DC2B1	DC2B0	CCP2M3	CCP2M2	CCP2M1	CCP2M0	0000 0000	59, 179
CCPR3H	Enhanced Capture/Compare/PWM Register 3 High Byte								xxxx xxxx	59, 180
CCPR3L	Enhanced Capture/Compare/PWM Register 3 Low Byte								xxxx xxxx	59, 180
CCP3CON	P3M1	P3M0	DC3B1	DC3B0	CCP3M3	CCP3M2	CCP3M1	CCP3M0	0000 0000	59, 179
ECCP1AS	ECCP1ASE	ECCP1AS2	ECCP1AS1	ECCP1AS0	PSS1AC1	PSS1AC0	PSS1BD1	PSS1BD0	0000 0000	59, 201
CVRCON	CVREN	CVROE	CVRR	CVRSS	CVR3	CVR2	CVR1	CVR0	0000 0000	59, 287
CMCON	C2OUT	C1OUT	C2INV	C1INV	CIS	CM2	CM1	CM0	0000 0111	59, 289
TMR3H	Timer3 Register High Byte								xxxx xxxx	59, 175
TMR3L	Timer3 Register Low Byte								xxxx xxxx	59, 175
T3CON	RD16	T3CCP2	T3CKPS1	T3CKPS0	T3CCP1	$\overline{T3SYNC}$	TMR3CS	TMR3ON	0000 0000	59, 173

Legend: x = unknown, u = unchanged, - = unimplemented, q = value depends on condition

Note 1: The SBOREN bit is only available when the BOREN<1:0> Configuration bits = 01; otherwise, this bit reads as '0'.

2: These registers and/or bits are not implemented on 64-pin devices and are read as '0'. Reset values are shown for 80-pin devices; individual unimplemented bits should be interpreted as '-'.

3: The PLLEN bit is only available in specific oscillator configuration; otherwise, it is disabled and reads as '0'. See **Section 2.6.4 "PLL in INTOSC Modes"**.

4: RA6/RA7 and their associated latch and direction bits are individually configured as port pins based on various primary oscillator modes. When disabled, these bits read as '0'.

5: RG5 and LATG5 are only available when Master Clear is disabled (MCLRE Configuration bit = 0); otherwise, RG5 and LATG5 read as '0'.

6: Bit 7 and Bit 6 are cleared by user software or by a POR.

7: Bit 21 of TBLPTRU allows access to the device Configuration bits.

TABLE 5-3: REGISTER FILE SUMMARY (CONTINUED)

File Name	Bit 7	Bit 6	Bit 5	Bit 4	Bit 3	Bit 2	Bit 1	Bit 0	Value on POR, BOR	Details on page:
PSPCON	IBF	OBF	IBOV	PSPMODE	—	—	—	—	0000 ----	59, 252
SPBRG1	EUSART1 Baud Rate Generator Register Low Byte								0000 0000	59, 252
RCREG1	EUSART1 Receive Register								0000 0000	59, 260
TXREG1	EUSART1 Transmit Register								0000 0000	59, 257
TXSTA1	CSRC	TX9	TXEN	SYNC	SENDB	BRGH	TRMT	TX9D	0000 0010	59, 248
RCSTA1	SPEN	RX9	SREN	CREN	ADDEN	FERR	OERR	RX9D	0000 000x	59, 249
EEADRH	—	—	—	—	—	—	EEPROM Address Register High Byte		---- --00	59, 111
EEADR	EEPROM Address Register Low Byte								0000 0000	59, 111
EEDATA	EEPROM Data Register								0000 0000	59, 111
EECON2	EEPROM Control Register 2 (not a physical register)								0000 0000	59, 88
EECON1	EEPGD	CFGS	—	FREE	WRERR	WREN	WR	RD	xx-0 x000	59, 89
IPR3	SSP2IP	BCL2IP	RC2IP	TX2IP	TMR4IP	CCP5IP	CCP4IP	CCP3IP	1111 1111	60, 131
PIR3	SSP2IF	BCL2IF	RC2IF	TX2IF	TMR4IF	CCP5IF	CCP4IF	CCP3IF	0000 0000	60, 125
PIE3	SSP2IE	BCL2IE	RC2IE	TX2IE	TMR4IE	CCP5IE	CCP4IE	CCP3IE	0000 0000	60, 129
IPR2	OSCFIP	CMIP	—	EEIP	BCL1IP	HLVDIP	TMR3IP	CCP2IP	11-1 1111	60, 131
PIR2	OSCFIF	CMIF	—	EEIF	BCL1IF	HLVDIF	TMR3IF	CCP2IF	00-0 0000	60, 125
PIE2	OSCFIE	CMIE	—	EEIE	BCL1IE	HLVDIE	TMR3IE	CCP2IE	00-0 0000	60, 128
IPR1	PSPIP	ADIP	RC1IP	TX1IP	SSP1IP	CCP1IP	TMR2IP	TMR1IP	1111 1111	60, 130
PIR1	PSPIF	ADIF	RC1IF	TX1IF	SSP1IF	CCP1IF	TMR2IF	TMR1IF	0000 0000	60, 124
PIE1	PSPIE	ADIE	RC1IE	TX1IE	SSP1IE	CCP1IE	TMR2IE	TMR1IE	0000 0000	60, 127
MEMCON(2)	EBDIS	—	WAIT1	WAIT0	—	—	WM1	WM0	0-00 --00	60, 96
OSCTUNE	INTSRC	PLLEN(3)	—	TUN4	TUN3	TUN2	TUN1	TUN0	00-0 0000	35, 60
TRISJ(2)	TRISJ7	TRISJ6	TRISJ5	TRISJ4	TRISJ3	TRISJ2	TRISJ1	TRISJ0	1111 1111	60, 157
TRISH(2)	TRISH7	TRISH6	TRISH5	TRISH4	TRISH3	TRISH2	TRISH1	TRISH0	1111 1111	60, 155
TRISG	—	—	—	TRISG4	TRISG3	TRISG2	TRISG1	TRISG0	---1 1111	60, 153
TRISF	TRISF7	TRISF6	TRISF5	TRISF4	TRISF3	TRISF2	TRISF1	TRISF0	1111 1111	60, 150
TRISE	TRISE7	TRISE6	TRISE5	TRISE4	TRISE3	TRISE2	TRISE1	TRISE0	1111 1111	60, 148
TRISD	TRISD7	TRISD6	TRISD5	TRISD4	TRISD3	TRISD2	TRISD1	TRISD0	1111 1111	60, 143
TRISC	TRISC7	TRISC6	TRISC5	TRISC4	TRISC3	TRISC2	TRISC1	TRISC0	1111 1111	60, 140
TRISB	TRISB7	TRISB6	TRISB5	TRISB4	TRISB3	TRISB2	TRISB1	TRISB0	1111 1111	60, 137
TRISA	TRISA7(4)	TRISA6(4)	TRISA5	TRISA4	TRISA3	TRISA2	TRISA1	TRISA0	1111 1111	60, 135
LATJ(2)	LATJ7	LATJ6	LATJ5	LATJ4	LATJ3	LATJ2	LATJ1	LATJ0	xxxx xxxx	60, 156
LATH(2)	LATH7	LATH6	LATH5	LATH4	LATH3	LATH2	LATH1	LATH0	xxxx xxxx	60, 154
LATG	—	—	LATG5(5)	LATG4	LATG3	LATG2	LATG1	LATG0	--xx xxxx	60, 151
LATF	LATF7	LATF6	LATF5	LATF4	LATF3	LATF2	LATF1	LATF0	xxxx xxxx	60, 149
LATE	LATE7	LATE6	LATE5	LATE4	LATE3	LATE2	LATE1	LATE0	xxxx xxxx	60, 146
LATD	LATD7	LATD6	LATD5	LATD4	LATD3	LATD2	LATD1	LATD0	xxxx xxxx	60, 143
LATC	LATC7	LATC6	LATC5	LATC4	LATC3	LATC2	LATC1	LATC0	xxxx xxxx	60, 140
LATB	LATB7	LATB6	LATB5	LATB4	LATB3	LATB2	LATB1	LATB0	xxxx xxxx	60, 137
LATA	LATA7(4)	LATA6(4)	LATA5	LATA4	LATA3	LATA2	LATA1	LATA0	xxxx xxxx	60, 135

Legend: x = unknown, u = unchanged, - = unimplemented, q = value depends on condition

Note 1: The SBOREN bit is only available when the BOREN<1:0> Configuration bits = 01; otherwise, this bit reads as '0'.

2: These registers and/or bits are not implemented on 64-pin devices and are read as '0'. Reset values are shown for 80-pin devices; individual unimplemented bits should be interpreted as '-'.

3: The PLLEN bit is only available in specific oscillator configuration; otherwise, it is disabled and reads as '0'. See **Section 2.6.4 "PLL in INTOSC Modes"**.

4: RA6/RA7 and their associated latch and direction bits are individually configured as port pins based on various primary oscillator modes. When disabled, these bits read as '0'.

5: RG5 and LATG5 are only available when Master Clear is disabled (MCLRE Configuration bit = 0); otherwise, RG5 and LATG5 read as '0'.

6: Bit 7 and Bit 6 are cleared by user software or by a POR.

7: Bit 21 of TBLPTRU allows access to the device Configuration bits.

© 2008 Microchip Technology Inc.

TABLE 5-3: REGISTER FILE SUMMARY (CONTINUED)

File Name	Bit 7	Bit 6	Bit 5	Bit 4	Bit 3	Bit 2	Bit 1	Bit 0	Value on POR, BOR	Details on page:
PORTJ(2)	RJ7	RJ6	RJ5	RJ4	RJ3	RJ2	RJ1	RJ0	xxxx xxxx	60, 156
PORTH(2)	RH7	RH6	RH5	RH4	RH3	RH2	RH1	RH0	0000 xxxx	60, 154
PORTG	—	—	RG5(5)	RG4	RG3	RG2	RG1	RG0	--xx xxxx	60, 151
PORTF	RF7	RF6	RF5	RF4	RF3	RF2	RF1	RF0	x000 0000	60, 149
PORTE	RE7	RE6	RE5	RE4	RE3	RE2	RE1	RE0	xxxx xxxx	60, 146
PORTD	RD7	RD6	RD5	RD4	RD3	RD2	RD1	RD0	xxxx xxxx	60, 143
PORTC	RC7	RC6	RC5	RC4	RC3	RC2	RC1	RC0	xxxx xxxx	60, 140
PORTB	RB7	RB6	RB5	RB4	RB3	RB2	RB1	RB0	xxxx xxxx	60, 137
PORTA	RA7(4)	RA6(4)	RA5	RA4	RA3	RA2	RA1	RA0	xx0x 0000	61, 135
SPBRGH1	EUSART1 Baud Rate Generator Register High Byte								0000 0000	61, 252
BAUDCON1	ABDOVF	RCIDL	—	SCKP	BRG16	—	WUE	ABDEN	01-0 0-00	61, 250
SPBRGH2	EUSART2 Baud Rate Generator Register High Byte								0000 0000	61, 252
BAUDCON2	ABDOVF	RCIDL	—	SCKP	BRG16	—	WUE	ABDEN	01-0 0-00	61, 250
ECCP1DEL	P1RSEN	P1DC6	P1DC5	P1DC4	P1DC3	P1DC2	P1DC1	P1DC0	0000 0000	61, 200
TMR4	Timer4 Register								0000 0000	61, 178
PR4	Timer4 Period Register								1111 1111	61, 178
T4CON	—	T4OUTPS3	T4OUTPS2	T4OUTPS1	T4OUTPS0	TMR4ON	T4CKPS1	T4CKPS0	-000 0000	61, 178
CCPR4H	Capture/Compare/PWM Register 4 High Byte								xxxx xxxx	61, 180
CCPR4L	Capture/Compare/PWM Register 4 Low Byte								xxxx xxxx	61, 180
CCP4CON	—	—	DC4B1	DC4B0	CCP4M3	CCP4M2	CCP4M1	CCP4M0	--00 0000	61, 179
CCPR5H	Capture/Compare/PWM Register 5 High Byte								xxxx xxxx	61, 180
CCPR5L	Capture/Compare/PWM Register 5 Low Byte								xxxx xxxx	61, 180
CCP5CON	—	—	DC5B1	DC5B0	CCP5M3	CCP5M2	CCP5M1	CCP5M0	--00 0000	61, 179
SPBRG2	EUSART2 Baud Rate Generator Register Low Byte								0000 0000	61, 252
RCREG2	EUSART2 Receive Register								0000 0000	61, 260
TXREG2	EUSART2 Transmit Register								0000 0000	61, 257
TXSTA2	CSRC	TX9	TXEN	SYNC	SENDB	BRGH	TRMT	TX9D	0000 0010	61, 248
RCSTA2	SPEN	RX9	SREN	CREN	ADDEN	FERR	OERR	RX9D	0000 000x	61, 249
ECCP3AS	ECCP3ASE	ECCP3AS2	ECCP3AS1	ECCP3AS0	PSS3AC1	PSS3AC0	PSS3BD1	PSS3BD0	0000 0000	61, 201
ECCP3DEL	P3RSEN	P3DC6	P3DC5	P3DC4	P3DC3	P3DC2	P3DC1	P3DC0	0000 0000	61, 200
ECCP2AS	ECCP2ASE	ECCP2AS2	ECCP2AS1	ECCP2AS0	PSS2AC1	PSS2AC0	PSS2BD1	PSS2BD0	0000 0000	61, 201
ECCP2DEL	P2RSEN	P2DC6	P2DC5	P2DC4	P2DC3	P2DC2	P2DC1	P2DC0	0000 0000	61, 200
SSP2BUF	MSSP2 Receive Buffer/Transmit Register								xxxx xxxx	61, 170
SSP2ADD	MSSP2 Address Register in I^{2}C™ Slave mode. MSSP2 Baud Rate Reload Register in I^{2}C Master mode.								0000 0000	61, 170
SSP2STAT	SMP	CKE	D/$\overline{A}$	P	S	R/$\overline{W}$	UA	BF	0000 0000	61, 216
SSP2CON1	WCOL	SSPOV	SSPEN	CKP	SSPM3	SSPM2	SSPM1	SSPM0	0000 0000	61, 217
SSP2CON2	GCEN	ACKSTAT	ACKDT	ACKEN	RCEN	PEN	RSEN	SEN	0000 0000	61, 218

Legend: x = unknown, u = unchanged, - = unimplemented, q = value depends on condition

Note 1: The SBOREN bit is only available when the BOREN<1:0> Configuration bits = 01; otherwise, this bit reads as '0'.

2: These registers and/or bits are not implemented on 64-pin devices and are read as '0'. Reset values are shown for 80-pin devices; individual unimplemented bits should be interpreted as '-'.

3: The PLLEN bit is only available in specific oscillator configuration; otherwise, it is disabled and reads as '0'. See **Section 2.6.4 "PLL in INTOSC Modes"**.

4: RA6/RA7 and their associated latch and direction bits are individually configured as port pins based on various primary oscillator modes. When disabled, these bits read as '0'.

5: RG5 and LATG5 are only available when Master Clear is disabled (MCLRE Configuration bit = 0); otherwise, RG5 and LATG5 read as '0'.

6: Bit 7 and Bit 6 are cleared by user software or by a POR.

7: Bit 21 of TBLPTRU allows access to the device Configuration bits.

5.3.5 STATUS REGISTER

The STATUS register, shown in Register 5-2, contains the arithmetic status of the ALU. As with any other SFR, it can be the operand for any instruction.

If the STATUS register is the destination for an instruction that affects the Z, DC, C, OV or N bits, the results of the instruction are not written; instead, the STATUS register is updated according to the instruction performed. Therefore, the result of an instruction with the STATUS register as its destination may be different than intended. As an example, `CLRF STATUS` will set the Z bit and leave the remaining Status bits unchanged ('`000u u1uu`').

It is recommended that only `BCF`, `BSF`, `SWAPF`, `MOVFF` and `MOVWF` instructions are used to alter the STATUS register, because these instructions do not affect the Z, C, DC, OV or N bits in the STATUS register.

For other instructions that do not affect Status bits, see the instruction set summaries in Table 26-2 and Table 26-3.

Note:	The C and DC bits operate as the $\overline{\text{borrow}}$ and $\overline{\text{digit borrow}}$ bits, respectively, in subtraction.

REGISTER 5-2: STATUS: ARITHMETIC STATUS REGISTER

U-0	U-0	U-0	R/W-x	R/W-x	R/W-x	R/W-x	R/W-x
—	—	—	N	OV	Z	DC(1)	C(2)
bit 7							bit 0

Legend:			
R = Readable bit	W = Writable bit	U = Unimplemented bit, read as '0'	
-n = Value at POR	'1' = Bit is set	'0' = Bit is cleared	x = Bit is unknown

bit 7-5 **Unimplemented:** Read as '`0`'

bit 4 **N:** Negative bit
This bit is used for signed arithmetic (2's complement). It indicates whether the result was negative (ALU MSB = `1`).
`1` = Result was negative
`0` = Result was positive

bit 3 **OV:** Overflow bit
This bit is used for signed arithmetic (2's complement). It indicates an overflow of the 7-bit magnitude which causes the sign bit (bit 7 of the result) to change state.
`1` = Overflow occurred for signed arithmetic (in this arithmetic operation)
`0` = No overflow occurred

bit 2 **Z:** Zero bit
`1` = The result of an arithmetic or logic operation is zero
`0` = The result of an arithmetic or logic operation is not zero

bit 1 **DC:** Digit Carry/$\overline{\text{borrow}}$ bit(1)
For `ADDWF`, `ADDLW`, `SUBLW` and `SUBWF` instructions:
`1` = A carry-out from the 4th low-order bit of the result occurred
`0` = No carry-out from the 4th low-order bit of the result

bit 0 **C:** Carry/$\overline{\text{borrow}}$ bit(2)
For `ADDWF`, `ADDLW`, `SUBLW` and `SUBWF` instructions:
`1` = A carry-out from the Most Significant bit of the result occurred
`0` = No carry-out from the Most Significant bit of the result occurred

Note 1: For $\overline{\text{borrow}}$, the polarity is reversed. A subtraction is executed by adding the 2's complement of the second operand. For rotate (`RRF`, `RLF`) instructions, this bit is loaded with either bit 4 or bit 3 of the source register.

2: For $\overline{\text{borrow}}$, the polarity is reversed. A subtraction is executed by adding the 2's complement of the second operand. For rotate (`RRF`, `RLF`) instructions, this bit is loaded with either the high or low-order bit of the source register.

© 2008 Microchip Technology Inc.

5.4 Data Addressing Modes

Note:	The execution of some instructions in the core PIC18 instruction set are changed when the PIC18 extended instruction set is enabled. See **Section 5.5 "Data Memory and the Extended Instruction Set"** for more information.

The data memory space can be addressed in several ways. For most instructions, the addressing mode is fixed. Other instructions may use up to three modes, depending on which operands are used and whether or not the extended instruction set is enabled.

The addressing modes are:

- Inherent
- Literal
- Direct
- Indirect

An additional addressing mode, Indexed Literal Offset, is available when the extended instruction set is enabled (XINST Configuration bit = 1). Its operation is discussed in greater detail in **Section 5.5.1 "Indexed Addressing with Literal Offset"**.

5.4.1 INHERENT AND LITERAL ADDRESSING

Many PIC18 control instructions do not need any argument at all; they either perform an operation that globally affects the device or they operate implicitly on one register. This addressing mode is known as Inherent Addressing. Examples include `SLEEP`, `RESET` and `DAW`.

Other instructions work in a similar way but require an additional explicit argument in the opcode. This is known as Literal Addressing mode because they require some literal value as an argument. Examples include `ADDLW` and `MOVLW`, which respectively, add or move a literal value to the W register. Other examples include `CALL` and `GOTO`, which include a 20-bit program memory address.

5.4.2 DIRECT ADDRESSING

Direct Addressing specifies all or part of the source and/or destination address of the operation within the opcode itself. The options are specified by the arguments accompanying the instruction.

In the core PIC18 instruction set, bit-oriented and byte-oriented instructions use some version of Direct Addressing by default. All of these instructions include some 8-bit literal address as their Least Significant Byte. This address specifies either a register address in one of the banks of data RAM (**Section 5.3.3 "General Purpose Register File"**) or a location in the Access Bank (**Section 5.3.2 "Access Bank"**) as the data source for the instruction.

The Access RAM bit 'a' determines how the address is interpreted. When 'a' is '1', the contents of the BSR (**Section 5.3.1 "Bank Select Register (BSR)"**) are used with the address to determine the complete 12-bit address of the register. When 'a' is '0', the address is interpreted as being a register in the Access Bank. Addressing that uses the Access RAM is sometimes also known as Direct Forced Addressing mode.

A few instructions, such as `MOVFF`, include the entire 12-bit address (either source or destination) in their opcodes. In these cases, the BSR is ignored entirely.

The destination of the operation's results is determined by the destination bit 'd'. When 'd' is '1', the results are stored back in the source register, overwriting its original contents. When 'd' is '0', the results are stored in the W register. Instructions without the 'd' argument have a destination that is implicit in the instruction; their destination is either the target register being operated on or the W register.

5.4.3 INDIRECT ADDRESSING

Indirect Addressing allows the user to access a location in data memory without giving a fixed address in the instruction. This is done by using File Select Registers (FSRs) as pointers to the locations to be read or written to. Since the FSRs are themselves located in RAM as Special File Registers, they can also be directly manipulated under program control. This makes FSRs very useful in implementing data structures, such as tables and arrays in data memory.

The registers for Indirect Addressing are also implemented with Indirect File Operands (INDFs) that permit automatic manipulation of the pointer value with auto-incrementing, auto-decrementing or offsetting with another value. This allows for efficient code, using loops, such as the example of clearing an entire RAM bank in Example 5-5.

EXAMPLE 5-5: HOW TO CLEAR RAM (BANK 1) USING INDIRECT ADDRESSING

```
        LFSR    FSR0, 100h ;
NEXT    CLRF    POSTINC0   ; Clear INDF
                           ; register then
                           ; inc pointer
        BTFSS   FSR0H, 1   ; All done with
                           ; Bank1?
        BRA     NEXT       ; NO, clear next
CONTINUE                   ; YES, continue
```

5.4.3.1 FSR Registers and the INDF Operand

At the core of Indirect Addressing are three sets of registers: FSR0, FSR1 and FSR2. Each represents a pair of 8-bit registers, FSRnH and FSRnL. The four upper bits of the FSRnH register are not used so each FSR pair holds a 12-bit value. This represents a value that can address the entire range of the data memory in a linear fashion. The FSR register pairs, then, serve as pointers to data memory locations.

Indirect Addressing is accomplished with a set of Indirect File Operands, INDF0 through INDF2. These can be thought of as “virtual” registers: they are mapped in the SFR space but are not physically implemented. Reading or writing to a particular INDF register actually accesses its corresponding FSR register pair. A read from INDF1, for example, reads the data at the address indicated by FSR1H:FSR1L. Instructions that use the INDF registers as operands actually use the contents of their corresponding FSR as a pointer to the instruction’s target. The INDF operand is just a convenient way of using the pointer.

Because Indirect Addressing uses a full 12-bit address, data RAM banking is not necessary. Thus, the current contents of the BSR and the Access RAM bit have no effect on determining the target address.

5.4.3.2 FSR Registers and POSTINC, POSTDEC, PREINC and PLUSW

In addition to the INDF operand, each FSR register pair also has four additional indirect operands. Like INDF, these are “virtual” registers that cannot be indirectly read or written to. Accessing these registers actually accesses the associated FSR register pair, but also performs a specific action on its stored value. They are:

- POSTDEC: accesses the FSR value, then automatically decrements it by 1 afterwards
- POSTINC: accesses the FSR value, then automatically increments it by 1 afterwards
- PREINC: increments the FSR value by 1, then uses it in the operation
- PLUSW: adds the signed value of the W register (range of -127 to 128) to that of the FSR and uses the new value in the operation.

In this context, accessing an INDF register uses the value in the FSR registers without changing them. Similarly, accessing a PLUSW register gives the FSR value offset by the value in the W register; neither value is actually changed in the operation. Accessing the other virtual registers changes the value of the FSR registers.

Operations on the FSRs with POSTDEC, POSTINC and PREINC affect the entire register pair; that is, rollovers of the FSRnL register from FFh to 00h carry over to the FSRnH register. On the other hand, results of these operations do not change the value of any flags in the STATUS register (e.g., Z, N, OV, etc.).

FIGURE 5-8: INDIRECT ADDRESSING

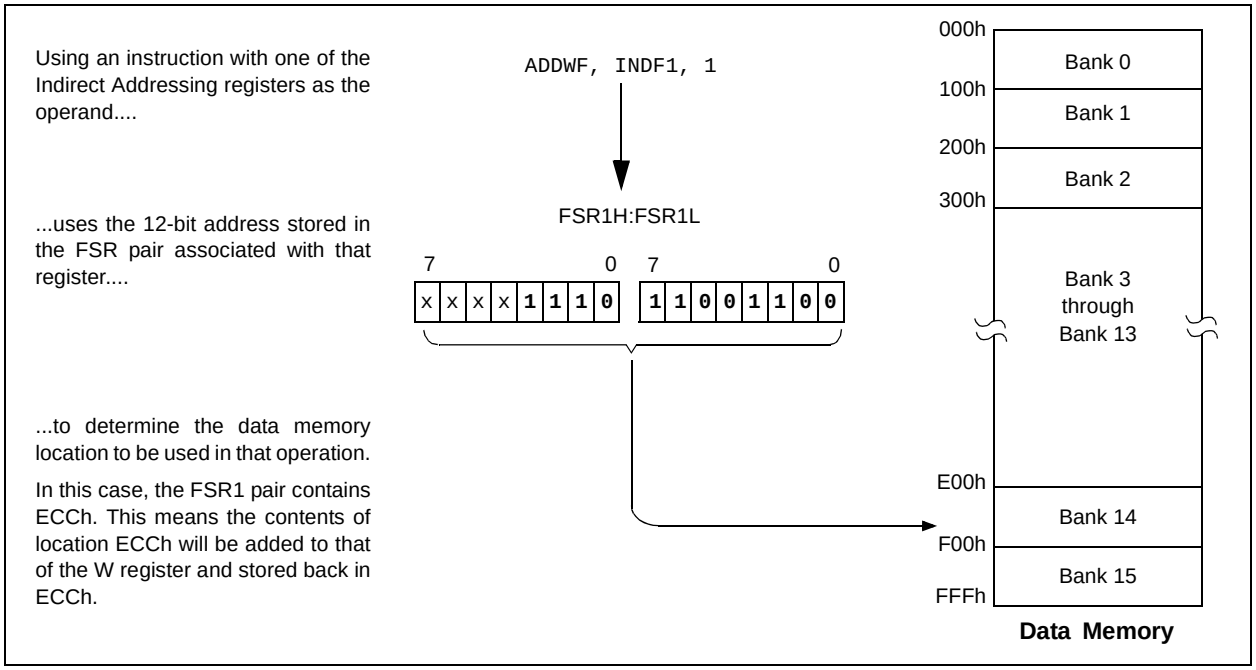

© 2008 Microchip Technology Inc.

The PLUSW register can be used to implement a form of Indexed Addressing in the data memory space. By manipulating the value in the W register, users can reach addresses that are fixed offsets from pointer addresses. In some applications, this can be used to implement some powerful program control structure, such as software stacks, inside of data memory.

5.4.3.3 Operations by FSRs on FSRs

Indirect Addressing operations that target other FSRs or virtual registers represent special cases. For example, using an FSR to point to one of the virtual registers will not result in successful operations. As a specific case, assume that FSR0H:FSR0L contains FE7h, the address of INDF1. Attempts to read the value of the INDF1 using INDF0 as an operand will return 00h. Attempts to write to INDF1 using INDF0 as the operand will result in a `NOP`.

On the other hand, using the virtual registers to write to an FSR pair may not occur as planned. In these cases, the value will be written to the FSR pair but without any incrementing or decrementing. Thus, writing to INDF2 or POSTDEC2 will write the same value to the FSR2H:FSR2L.

Since the FSRs are physical registers mapped in the SFR space, they can be manipulated through all direct operations. Users should proceed cautiously when working on these registers, particularly if their code uses Indirect Addressing.

Similarly, operations by Indirect Addressing are generally permitted on all other SFRs. Users should exercise the appropriate caution that they do not inadvertently change settings that might affect the operation of the device.

5.5 Data Memory and the Extended Instruction Set

Enabling the PIC18 extended instruction set (XINST Configuration bit = `1`) significantly changes certain aspects of data memory and its addressing. Specifically, the use of the Access Bank for many of the core PIC18 instructions is different; this is due to the introduction of a new addressing mode for the data memory space.

What does not change is just as important. The size of the data memory space is unchanged, as well as its linear addressing. The SFR map remains the same. Core PIC18 instructions can still operate in both Direct and Indirect Addressing mode; inherent and literal instructions do not change at all. Indirect Addressing with FSR0 and FSR1 also remain unchanged.

5.5.1 INDEXED ADDRESSING WITH LITERAL OFFSET

Enabling the PIC18 extended instruction set changes the behavior of Indirect Addressing using the FSR2 register pair within Access RAM. Under the proper conditions, instructions that use the Access Bank – that is, most bit-oriented and byte-oriented instructions – can invoke a form of Indexed Addressing using an offset specified in the instruction. This special addressing mode is known as Indexed Addressing with Literal Offset, or Indexed Literal Offset mode.

When using the extended instruction set, this addressing mode requires the following:

- The use of the Access Bank is forced (‘a’ = `0`) and
- The file address argument is less than or equal to 5Fh.

Under these conditions, the file address of the instruction is not interpreted as the lower byte of an address (used with the BSR in Direct Addressing), or as an 8-bit address in the Access Bank. Instead, the value is interpreted as an offset value to an address pointer, specified by FSR2. The offset and the contents of FSR2 are added to obtain the target address of the operation.

5.5.2 INSTRUCTIONS AFFECTED BY INDEXED LITERAL OFFSET MODE

Any of the core PIC18 instructions that can use Direct Addressing are potentially affected by the Indexed Literal Offset Addressing mode. This includes all byte-oriented and bit-oriented instructions, or almost one-half of the standard PIC18 instruction set. Instructions that only use Inherent or Literal Addressing modes are unaffected.

Additionally, byte-oriented and bit-oriented instructions are not affected if they do not use the Access Bank (Access RAM bit is ‘1’), or include a file address of 60h or above. Instructions meeting these criteria will continue to execute as before. A comparison of the different possible addressing modes when the extended instruction set is enabled in shown in Figure 5-9.

Those who desire to use byte-oriented or bit-oriented instructions in the Indexed Literal Offset mode should note the changes to assembler syntax for this mode. This is described in more detail in **Section 26.2.1 “Extended Instruction Syntax”**.

FIGURE 5-9: COMPARING ADDRESSING OPTIONS FOR BIT-ORIENTED AND BYTE-ORIENTED INSTRUCTIONS (EXTENDED INSTRUCTION SET ENABLED)

EXAMPLE INSTRUCTION: `ADDWF, f, d, a` (Opcode: `0010 01da ffff ffff`)

When 'a' = 0 and f ≥ 60h:

The instruction executes in Direct Forced mode. 'f' is interpreted as a location in the Access RAM between 060h and 0FFh. This is the same as locations 060h to 07Fh (Bank 0) and F80h to FFFh (Bank 15) of data memory.

Locations below 60h are not available in this addressing mode.

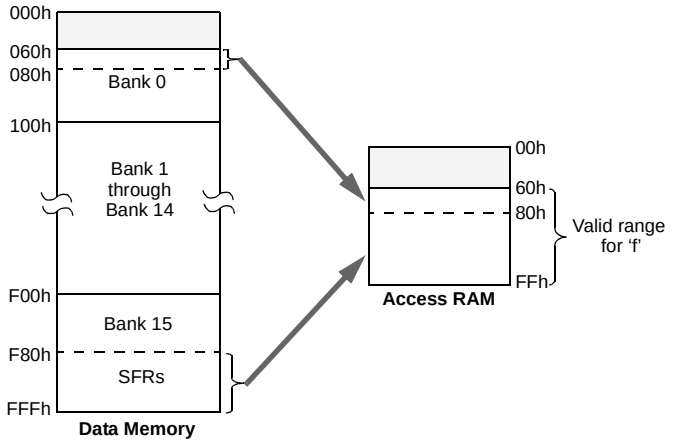

When 'a' = 0 and f ≤ 5Fh:

The instruction executes in Indexed Literal Offset mode. 'f' is interpreted as an offset to the address value in FSR2. The two are added together to obtain the address of the target register for the instruction. The address can be anywhere in the data memory space.

Note that in this mode, the correct syntax is now:
`ADDWF [k], d`
where 'k' is the same as 'f'.

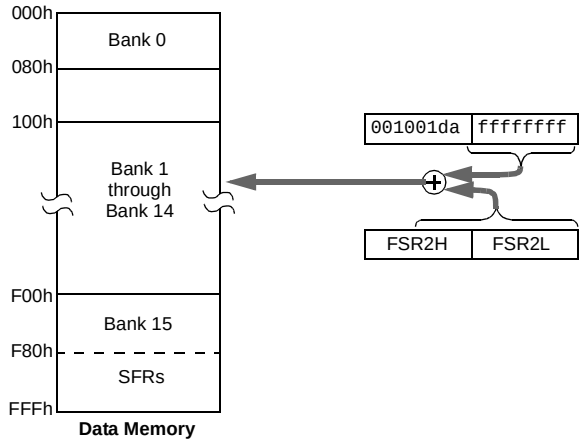

When 'a' = 1 (all values of f):

The instruction executes in Direct mode (also known as Direct Long mode). 'f' is interpreted as a location in one of the 16 banks of the data memory space. The bank is designated by the Bank Select Register (BSR). The address can be in any implemented bank in the data memory space.

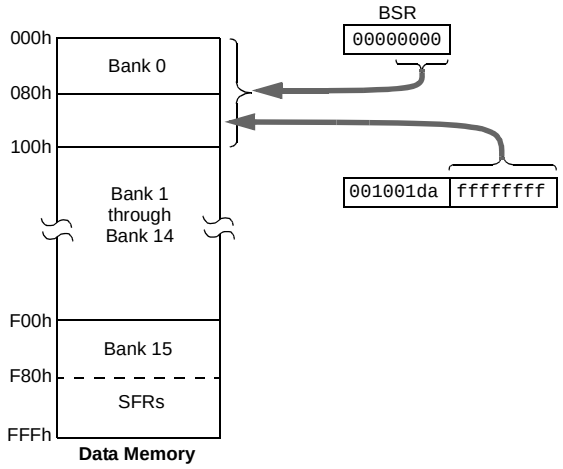

© 2008 Microchip Technology Inc.

5.5.3 MAPPING THE ACCESS BANK IN INDEXED LITERAL OFFSET MODE

The use of Indexed Literal Offset Addressing mode effectively changes how the first 96 locations of Access RAM (00h to 5Fh) are mapped. Rather than containing just the contents of the bottom half of Bank 0, this mode maps the contents from Bank 0 and a user defined “window” that can be located anywhere in the data memory space. The value of FSR2 establishes the lower boundary of the addresses mapped into the window, while the upper boundary is defined by FSR2 plus 95 (5Fh). Addresses in the Access RAM above 5Fh are mapped as previously described (see **Section 5.3.2 “Access Bank”**). An example of Access Bank remapping in this addressing mode is shown in Figure 5-10.

Remapping of the Access Bank applies *only* to operations using the Indexed Literal Offset mode. Operations that use the BSR (Access RAM bit is ‘1’) will continue to use Direct Addressing as before.

5.6 PIC18 Instruction Execution and the Extended Instruction Set

Enabling the extended instruction set adds eight additional commands to the existing PIC18 instruction set. These instructions are executed as described in **Section 26.2 “Extended Instruction Set”**.

FIGURE 5-10: REMAPPING THE ACCESS BANK WITH INDEXED LITERAL OFFSET ADDRESSING

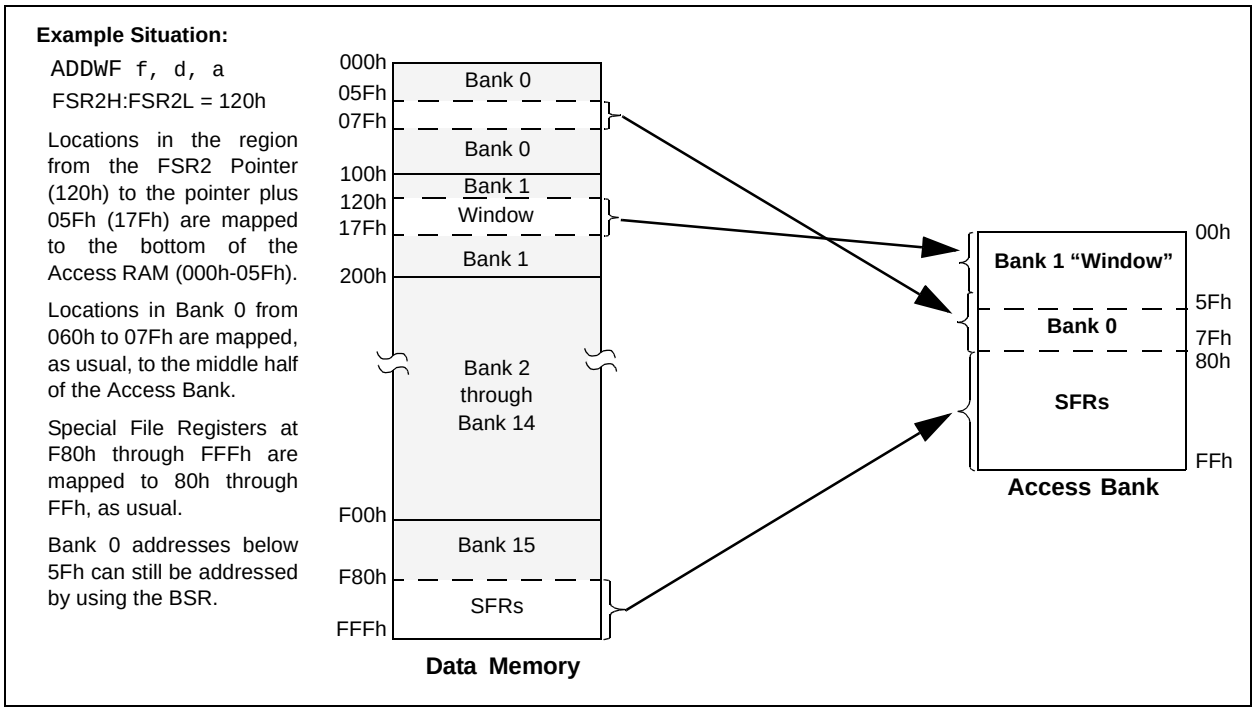

NOTES:

© 2008 Microchip Technology Inc.

6.0 FLASH PROGRAM MEMORY

The Flash program memory is readable, writable and erasable during normal operation over the entire VDD range.

A read from program memory is executed on one byte at a time. A write to program memory is executed on blocks of 64 bytes at a time. Program memory is erased in blocks of 64 bytes at a time. A bulk erase operation may not be issued from user code.

Writing or erasing program memory will cease instruction fetches until the operation is complete. The program memory cannot be accessed during the write or erase, therefore, code cannot execute. An internal programming timer terminates program memory writes and erases.

A value written to program memory does not need to be a valid instruction. Executing a program memory location that forms an invalid instruction results in a NOP.

6.1 Table Reads and Table Writes

In order to read and write program memory, there are two operations that allow the processor to move bytes between the program memory space and the data RAM:

- Table Read (TBLRD)
- Table Write (TBLWT)

The program memory space is 16 bits wide, while the data RAM space is 8 bits wide. Table reads and table writes move data between these two memory spaces through an 8-bit register (TABLAT).

Table read operations retrieve data from program memory and place it into the data RAM space. Figure 6-1 shows the operation of a table read with program memory and data RAM.

Table write operations store data from the data memory space into holding registers in program memory. The procedure to write the contents of the holding registers into program memory is detailed in **Section 6.5 "Writing to Flash Program Memory"**. Figure 6-2 shows the operation of a table write with program memory and data RAM.

Table operations work with byte entities. A table block containing data, rather than program instructions, is not required to be word aligned. Therefore, a table block can start and end at any byte address. If a table write is being used to write executable code into program memory, program instructions will need to be word aligned.

FIGURE 6-1: TABLE READ OPERATION

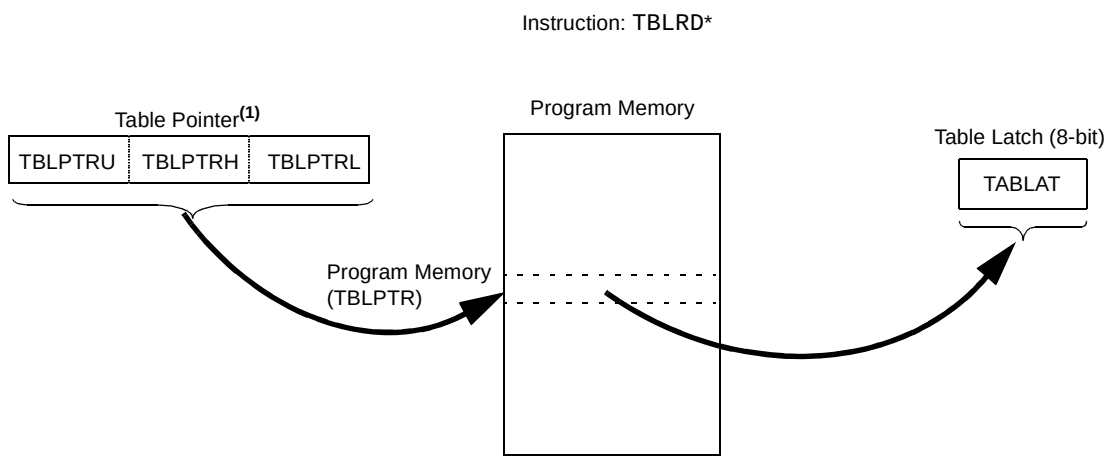

Note 1: Table Pointer register points to a byte in program memory.

FIGURE 6-2: TABLE WRITE OPERATION

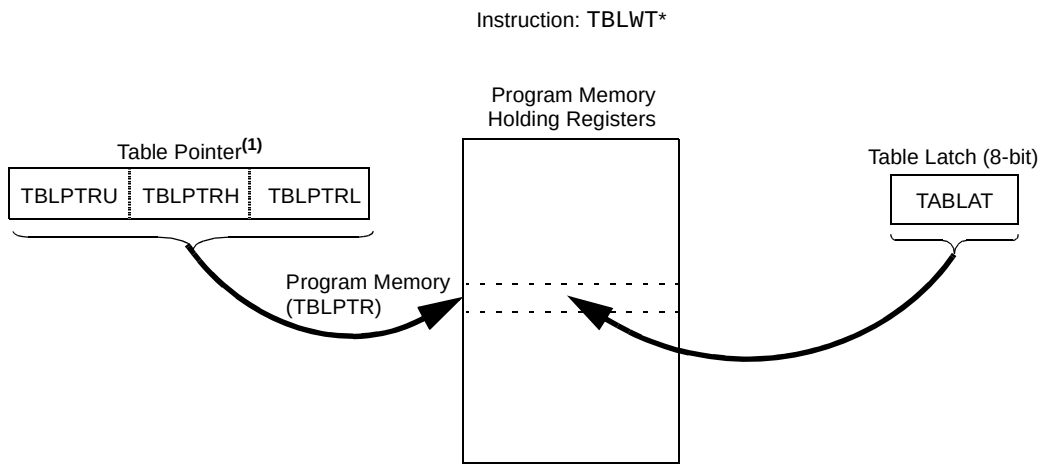

Note1: Table Pointer actually points to one of 64 holding registers, the address of which is determined by TBLPTRL<5:0>. The process for physically writing data to the program memory array is discussed in **Section 6.5 "Writing to Flash Program Memory"**.

6.2 Control Registers

Several control registers are used in conjunction with the TBLRD and TBLWT instructions. These include the:

- EECON1 register
- EECON2 register
- TABLAT register
- TBLPTR registers

6.2.1 EECON1 AND EECON2 REGISTERS

The EECON1 register (Register 6-1) is the control register for memory accesses. The EECON2 register is not a physical register; it is used exclusively in the memory write and erase sequences. Reading EECON2 will read all '0's.

The EEPGD control bit determines if the access will be a program or data EEPROM memory access. When clear, any subsequent operations will operate on the data EEPROM memory. When set, any subsequent operations will operate on the program memory.

The CFGS control bit determines if the access will be to the Configuration/Calibration registers or to program memory/data EEPROM memory. When set, subsequent operations will operate on Configuration registers regardless of EEPGD (see **Section 25.0 "Special Features of the CPU"**). When clear, memory selection access is determined by EEPGD.

The FREE bit, when set, will allow a program memory erase operation. When FREE is set, the erase operation is initiated on the next WR command. When FREE is clear, only writes are enabled.

The WREN bit, when set, will allow a write operation. On power-up, the WREN bit is clear. The WRERR bit is set in hardware when the WR bit is set and cleared when the internal programming timer expires and the write operation is complete.

Note:	During normal operation, the WRERR is read as '1'. This can indicate that a write operation was prematurely terminated by a Reset, or a write operation was attempted improperly.

The WR control bit initiates write operations. The bit cannot be cleared, only set, in software; it is cleared in hardware at the completion of the write operation.

Note:	The EEIF interrupt flag bit (PIR2<4>) is set when the write is complete. It must be cleared in software.

© 2008 Microchip Technology Inc.

REGISTER 6-1: EECON1: EEPROM CONTROL REGISTER 1

R/W-x	R/W-x	U-0	R/W-0	R/W-x	R/W-0	R/S-0	R/S-0
EEPGD	CFGS	—	FREE	WRERR(1)	WREN	WR	RD
bit 7							bit 0

Legend:			
R = Readable bit	W = Writable bit	U = Unimplemented bit, read as ‘0’	
-n = Value at POR	‘1’ = Bit is set	‘0’ = Bit is cleared	x = Bit is unknown

bit 7 **EEPGD:** Flash Program or Data EEPROM Memory Select bit
- 1 = Access Flash program memory
- 0 = Access data EEPROM memory

bit 6 **CFGS:** Flash Program/Data EEPROM or Configuration Select bit
- 1 = Access Configuration registers
- 0 = Access Flash program or data EEPROM memory

bit 5 **Unimplemented:** Read as ‘0’

bit 4 **FREE:** Flash Row Erase Enable bit
- 1 = Erase the program memory row addressed by TBLPTR on the next WR command (cleared by completion of erase operation)
- 0 = Perform write only

bit 3 **WRERR:** Flash Program/Data EEPROM Error Flag bit(1)
- 1 = A write operation is prematurely terminated (any Reset during self-timed programming in normal operation, or an improper write attempt)
- 0 = The write operation completed

bit 2 **WREN:** Flash Program/Data EEPROM Write Enable bit
- 1 = Allows write cycles to Flash program/data EEPROM
- 0 = Inhibits write cycles to Flash program/data EEPROM

bit 1 **WR:** Write Control bit
- 1 = Initiates a data EEPROM erase/write cycle or a program memory erase cycle or write cycle. (The operation is self-timed and the bit is cleared by hardware once write is complete. The WR bit can only be set (not cleared) in software.)
- 0 = Write cycle to the EEPROM is complete

bit 0 **RD:** Read Control bit
- 1 = Initiates an EEPROM read (Read takes one cycle. RD is cleared in hardware. The RD bit can only be set (not cleared) in software. RD bit cannot be set when EEPGD = 1 or CFGS = 1.)
- 0 = Does not initiate an EEPROM read

Note 1: When a WRERR occurs, the EEPGD and CFGS bits are not cleared. This allows tracing of the error condition.

6.2.2 TABLAT – TABLE LATCH REGISTER

The Table Latch (TABLAT) is an 8-bit register mapped into the SFR space. The Table Latch register is used to hold 8-bit data during data transfers between program memory and data RAM.

6.2.3 TBLPTR – TABLE POINTER REGISTER

The Table Pointer (TBLPTR) register addresses a byte within the program memory. The TBLPTR is comprised of three SFR registers: Table Pointer Upper Byte, Table Pointer High Byte and Table Pointer Low Byte (TBLPTRU:TBLPTRH:TBLPTRL). These three registers join to form a 22-bit wide pointer. The low-order 21 bits allow the device to address up to 2 Mbytes of program memory space. The 22nd bit allows access to the device ID, the user ID and the Configuration bits.

The Table Pointer register, TBLPTR, is used by the `TBLRD` and `TBLWT` instructions. These instructions can update the TBLPTR in one of four ways based on the table operation. These operations are shown in Table 6-1. These operations on the TBLPTR only affect the low-order 21 bits.

6.2.4 TABLE POINTER BOUNDARIES

TBLPTR is used in reads, writes and erases of the Flash program memory.

When a `TBLRD` is executed, all 22 bits of the TBLPTR determine which byte is read from program memory into TABLAT.

When a `TBLWT` is executed, the six LSbs of the Table Pointer register (TBLPTR<5:0>) determine which of the 64 program memory holding registers is written to. When the timed write to program memory begins (via the WR bit), the 16 MSbs of the TBLPTR (TBLPTR<21:6>) determine which program memory block of 64 bytes is written to. For more detail, see **Section 6.5 “Writing to Flash Program Memory”**.

When an erase of program memory is executed, the 16 MSbs of the Table Pointer register (TBLPTR<21:6>) point to the 64-byte block that will be erased. The Least Significant bits (TBLPTR<5:0>) are ignored.

Figure 6-3 describes the relevant boundaries of TBLPTR based on Flash program memory operations.

TABLE 6-1: TABLE POINTER OPERATIONS WITH `TBLRD` AND `TBLWT` INSTRUCTIONS

Example	Operation on Table Pointer
`TBLRD*` `TBLWT*`	TBLPTR is not modified
`TBLRD*+` `TBLWT*+`	TBLPTR is incremented after the read/write
`TBLRD*-` `TBLWT*-`	TBLPTR is decremented after the read/write
`TBLRD+*` `TBLWT+*`	TBLPTR is incremented before the read/write

FIGURE 6-3: TABLE POINTER BOUNDARIES BASED ON OPERATION

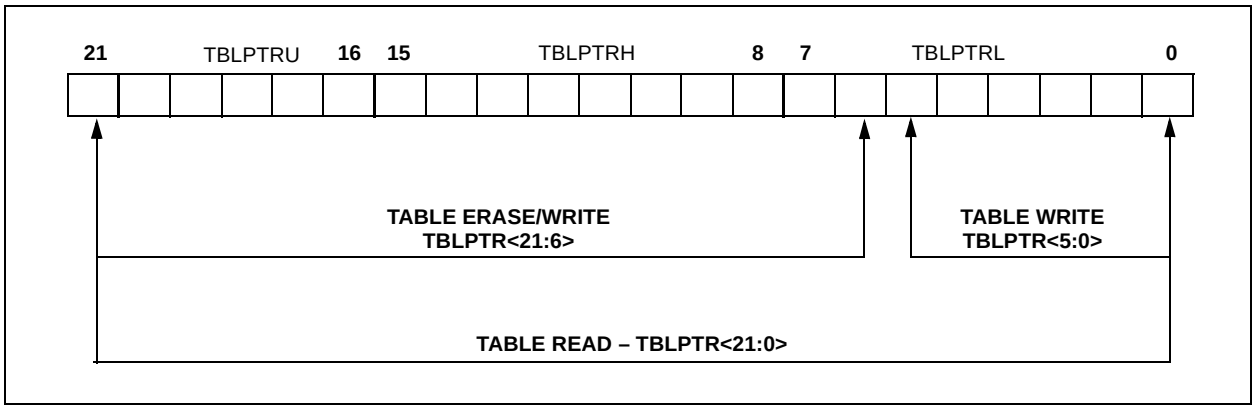

© 2008 Microchip Technology Inc.

6.3 Reading the Flash Program Memory

The TBLRD instruction is used to retrieve data from program memory and places it into data RAM. Table reads from program memory are performed one byte at a time.

TBLPTR points to a byte address in program space. Executing TBLRD places the byte pointed to into TABLAT. In addition, TBLPTR can be modified automatically for the next table read operation.

The internal program memory is typically organized by words. The Least Significant bit of the address selects between the high and low bytes of the word. Figure 6-4 shows the interface between the internal program memory and the TABLAT.

FIGURE 6-4: READS FROM FLASH PROGRAM MEMORY

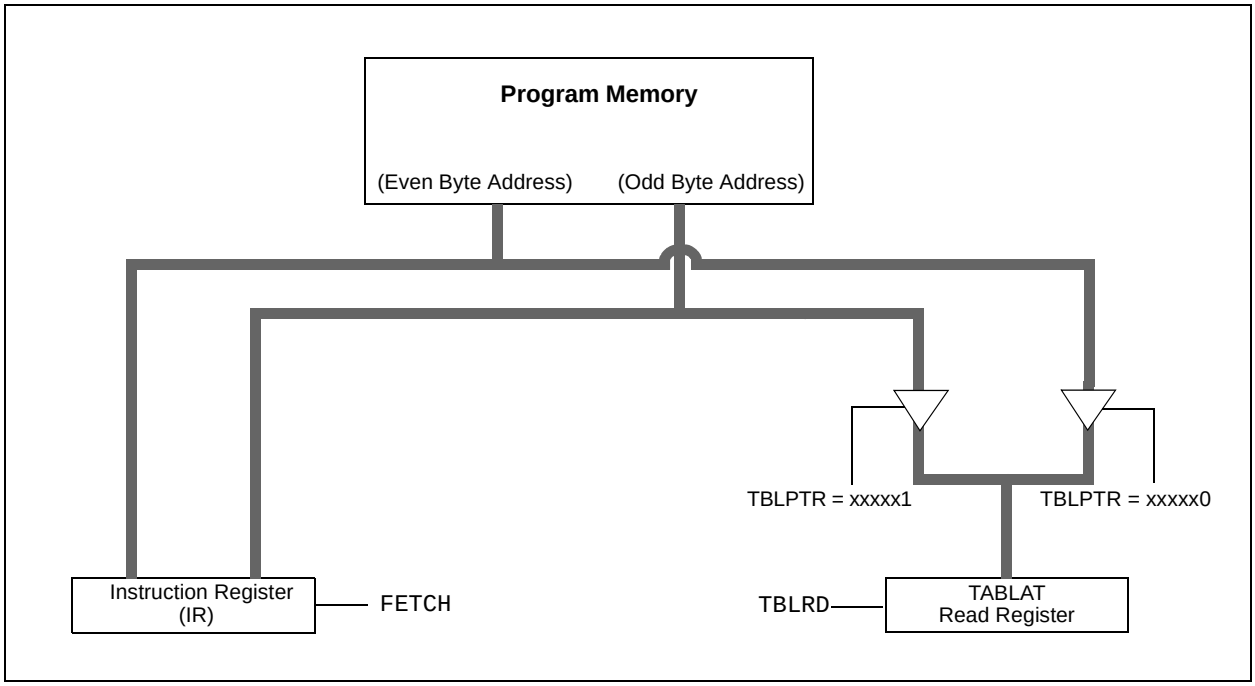

EXAMPLE 6-1: READING A FLASH PROGRAM MEMORY WORD

```
            MOVLW   CODE_ADDR_UPPER        ; Load TBLPTR with the base
            MOVWF   TBLPTRU                ; address of the word
            MOVLW   CODE_ADDR_HIGH
            MOVWF   TBLPTRH
            MOVLW   CODE_ADDR_LOW
            MOVWF   TBLPTRL
READ_WORD
            TBLRD*+                        ; read into TABLAT and increment
            MOVF    TABLAT, W              ; get data
            MOVWF   WORD_EVEN
            TBLRD*+                        ; read into TABLAT and increment
            MOVF    TABLAT, W              ; get data
            MOVF    WORD_ODD
```

6.4 Erasing Flash Program Memory

The minimum erase block is 32 words or 64 bytes. Only through the use of an external programmer, or through ICSP control, can larger blocks of program memory be bulk erased. Word erase in the Flash array is not supported.

When initiating an erase sequence from the micro-controller itself, a block of 64 bytes of program memory is erased. The Most Significant 16 bits of the TBLPTR<21:6> point to the block being erased. TBLPTR<5:0> are ignored.

The EECON1 register commands the erase operation. The EEPGD bit must be set to point to the Flash program memory. The WREN bit must be set to enable write operations. The FREE bit is set to select an erase operation.

For protection, the write initiate sequence for EECON2 must be used.

A long write is necessary for erasing the internal Flash. Instruction execution is halted while in a long write cycle. The long write will be terminated by the internal programming timer.

6.4.1 FLASH PROGRAM MEMORY ERASE SEQUENCE

The sequence of events for erasing a block of internal program memory location is:

1. Load Table Pointer register with address of row being erased.
2. Set the EECON1 register for the erase operation:
   - set EEPGD bit to point to program memory;
   - clear the CFGS bit to access program memory;
   - set WREN bit to enable writes;
   - set FREE bit to enable the erase.
3. Disable interrupts.
4. Write 55h to EECON2.
5. Write 0AAh to EECON2.
6. Set the WR bit. This will begin the row erase cycle.
7. The CPU will stall for duration of the erase for TIW (see parameter D133A).
8. Re-enable interrupts.

EXAMPLE 6-2: ERASING A FLASH PROGRAM MEMORY ROW

```
                MOVLW   CODE_ADDR_UPPER         ; load TBLPTR with the base
                MOVWF   TBLPTRU                 ; address of the memory block
                MOVLW   CODE_ADDR_HIGH
                MOVWF   TBLPTRH
                MOVLW   CODE_ADDR_LOW
                MOVWF   TBLPTRL
        ERASE_ROW
                BSF     EECON1, EEPGD           ; point to Flash program memory
                BCF     EECON1, CFGS            ; access Flash program memory
                BSF     EECON1, WREN            ; enable write to memory
                BSF     EECON1, FREE            ; enable Row Erase operation
                BCF     INTCON, GIE             ; disable interrupts
    Required    MOVLW   55h
    Sequence    MOVWF   EECON2                  ; write 55h
                MOVLW   0AAh
                MOVWF   EECON2                  ; write 0AAh
                BSF     EECON1, WR              ; start erase (CPU stall)
                BSF     INTCON, GIE             ; re-enable interrupts
```


© 2008 Microchip Technology Inc.

6.5 Writing to Flash Program Memory

The minimum programming block is 32 words or 64 bytes. Word or byte programming is not supported.

Table writes are used internally to load the holding registers needed to program the Flash memory. There are 64 holding registers used by the table writes for programming.

Since the Table Latch (TABLAT) is only a single byte, the TBLWT instruction may need to be executed 64 times for each programming operation. All of the table write operations will essentially be short writes because only the holding registers are written. At the end of updating the 64 holding registers, the EECON1 register must be written to in order to start the programming operation with a long write.

The long write is necessary for programming the internal Flash. Instruction execution is halted while in a long write cycle. The long write will be terminated by the internal programming timer.

The EEPROM on-chip timer controls the write time. The write/erase voltages are generated by an on-chip charge pump, rated to operate over the voltage range of the device.

> **Note:** The default value of the holding registers on device Resets and after write operations is FFh. A write of FFh to a holding register does not modify that byte. This means that individual bytes of program memory may be modified, provided that the change does not attempt to change any bit from a '0' to a '1'. When modifying individual bytes, it is not necessary to load all 64 holding registers before executing a write operation.

FIGURE 6-5: TABLE WRITES TO FLASH PROGRAM MEMORY

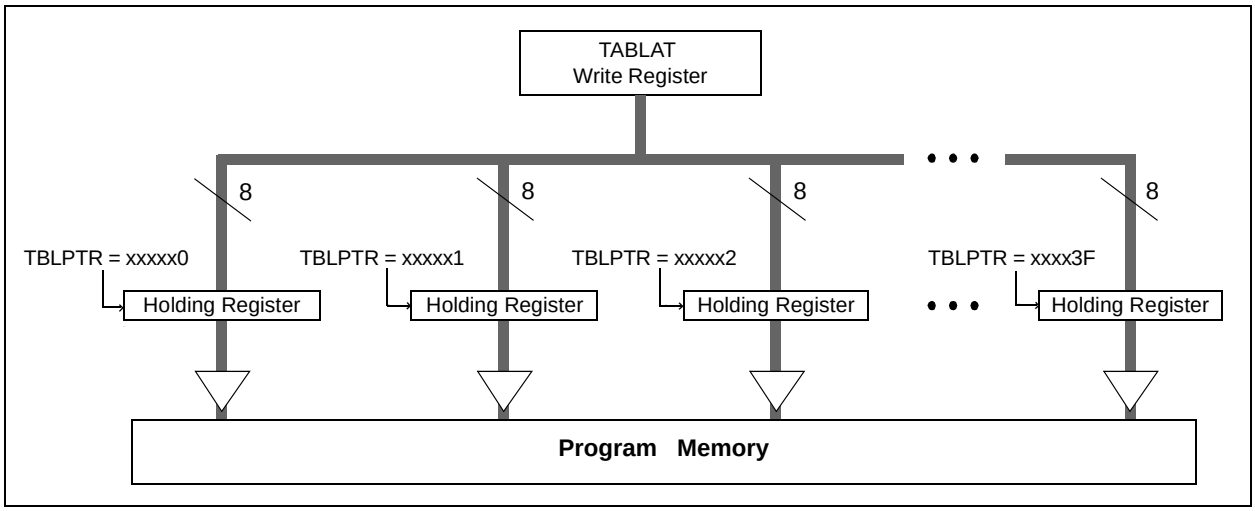

6.5.1 FLASH PROGRAM MEMORY WRITE SEQUENCE

The sequence of events for programming an internal program memory location should be:

1. Read 64 bytes into RAM.
2. Update data values in RAM as necessary.
3. Load Table Pointer register with address being erased.
4. Execute the row erase procedure.
5. Load Table Pointer register with address of first byte being written.
6. Write the 64 bytes into the holding registers with auto-increment.
7. Set the EECON1 register for the write operation:
   - set EEPGD bit to point to program memory;
   - clear the CFGS bit to access program memory;
   - set WREN to enable byte writes.
8. Disable interrupts.
9. Write 55h to EECON2.
10. Write 0AAh to EECON2.
11. Set the WR bit. This will begin the write cycle.
12. The CPU will stall for duration of the write for T_{IW} (see parameter D133A).
13. Re-enable interrupts.
14. Verify the memory (table read).

An example of the required code is shown in Example 6-3 on the following page.

> **Note:** Before setting the WR bit, the Table Pointer address needs to be within the intended address range of the 64 bytes in the holding register.

EXAMPLE 6-3: WRITING TO FLASH PROGRAM MEMORY

```
                MOVLW   D'64'                   ; number of bytes in erase block
                MOVWF   COUNTER
                MOVLW   BUFFER_ADDR_HIGH        ; point to buffer
                MOVWF   FSR0H
                MOVLW   BUFFER_ADDR_LOW
                MOVWF   FSR0L
                MOVLW   CODE_ADDR_UPPER         ; Load TBLPTR with the base
                MOVWF   TBLPTRU                 ; address of the memory block
                MOVLW   CODE_ADDR_HIGH
                MOVWF   TBLPTRH
                MOVLW   CODE_ADDR_LOW
                MOVWF   TBLPTRL
READ_BLOCK
                TBLRD*+                         ; read into TABLAT, and inc
                MOVF    TABLAT, W               ; get data
                MOVWF   POSTINC0                ; store data
                DECFSZ  COUNTER                 ; done?
                BRA     READ_BLOCK              ; repeat
MODIFY_WORD
                MOVLWD  ATA_ADDR_HIGH           ; point to buffer
                MOVWF   FSR0H
                MOVLW   DATA_ADDR_LOW
                MOVWF   FSR0L
                MOVLW   NEW_DATA_LOW            ; update buffer word
                MOVWF   POSTINC0
                MOVLW   NEW_DATA_HIGH
                MOVWF   INDF0
ERASE_BLOCK
                MOVLW   CODE_ADDR_UPPER         ; load TBLPTR with the base
                MOVWF   TBLPTRU                 ; address of the memory block
                MOVLW   CODE_ADDR_HIGH
                MOVWF   TBLPTRH
                MOVLW   CODE_ADDR_LOW
                MOVWF   TBLPTRL
                BSF     EECON1, EEPGD           ; point to Flash program memory
                BCF     EECON1, CFGS            ; access Flash program memory
                BSF     EECON1, WREN            ; enable write to memory
                BSF     EECON1, FREE            ; enable Row Erase operation
                BCF     INTCON, GIE             ; disable interrupts
                MOVLW   55h
Required        MOVWF   EECON2                  ; write 55h
Sequence        MOVLW   0AAh
                MOVWF   EECON2                  ; write 0AAh
                BSF     EECON1, WR              ; start erase (CPU stall)
                BSF     INTCON, GIE             ; re-enable interrupts
                TBLRD*-                         ; dummy read decrement
                MOVLW   BUFFER_ADDR_HIGH        ; point to buffer
                MOVWF   FSR0H
                MOVLW   BUFFER_ADDR_LOW
                MOVWF   FSR0L
WRITE_BUFFER_BACK
                MOVLW   D'64'                   ; number of bytes in holding register
                MOVWF   COUNTER
WRITE_BYTE_TO_HREGS
                MOVFF   POSTINC0, WREG          ; get low byte of buffer data
                MOVWF   TABLAT                  ; present data to table latch
                TBLWT+*                         ; write data, perform a short write
                                                ; to internal TBLWT holding register.
                DECFSZ  COUNTER                 ; loop until buffers are full
                BRA     WRITE_WORD_TO_HREGS
```


© 2008 Microchip Technology Inc.

EXAMPLE 6-3: WRITING TO FLASH PROGRAM MEMORY (CONTINUED)

```
PROGRAM_MEMORY
                BSF     EECON1, EEPGD  ; point to Flash program memory
                BCF     EECON1, CFGS   ; access Flash program memory
                BSF     EECON1, WREN   ; enable write to memory
                BCF     INTCON, GIE    ; disable interrupts
                MOVLW   55h
    Required    MOVWF   EECON2         ; write 55h
    Sequence    MOVLW   0AAh
                MOVWF   EECON2         ; write 0AAh
                BSF     EECON1, WR     ; start program (CPU stall)
                BSF     INTCON, GIE    ; re-enable interrupts
                BCF     EECON1, WREN   ; disable write to memory
```

6.5.2 WRITE VERIFY

Depending on the application, good programming practice may dictate that the value written to the memory should be verified against the original value. This should be used in applications where excessive writes can stress bits near the specification limit.

6.5.3 UNEXPECTED TERMINATION OF WRITE OPERATION

If a write is terminated by an unplanned event, such as loss of power or an unexpected Reset, the memory location just programmed should be verified and reprogrammed if needed. If the write operation is interrupted by a $\overline{\text{MCLR}}$ Reset or a WDT Time-out Reset during normal operation, the user can check the WRERR bit and rewrite the location(s) as needed.

6.5.4 PROTECTION AGAINST SPURIOUS WRITES

To protect against spurious writes to Flash program memory, the write initiate sequence must also be followed. See **Section 25.0 “Special Features of the CPU”** for more detail.

6.6 Flash Program Operation During Code Protection

See **Section 25.5 “Program Verification and Code Protection”** for details on code protection of Flash program memory.

TABLE 6-2: REGISTERS ASSOCIATED WITH PROGRAM FLASH MEMORY

Name	Bit 7	Bit 6	Bit 5	Bit 4	Bit 3	Bit 2	Bit 1	Bit 0	Reset Values on page
TBLPTRU	—	—	bit 21(1)	Program Memory Table Pointer Upper Byte (TBLPTR<20:16>)					57
TBPLTRH	Program Memory Table Pointer High Byte (TBLPTR<15:8>)								57
TBLPTRL	Program Memory Table Pointer Low Byte (TBLPTR<7:0>)								57
TABLAT	Program Memory Table Latch								57
INTCON	GIE/GIEH	PEIE/GIEL	TMR0IE	INT0IE	RBIE	TMR0IF	INT0IF	RBIF	57
EECON2	EEPROM Control Register 2 (not a physical register)								59
EECON1	EEPGD	CFGS	—	FREE	WRERR	WREN	WR	RD	59
IPR2	OSCFIP	CMIP	—	EEIP	BCL1IP	HLVDIP	TMR3IP	CCP2IP	60
PIR2	OSCFIF	CMIF	—	EEIF	BCL1IF	HLVDIF	TMR3IF	CCP2IF	60
PIE2	OSCFIE	CMIE	—	EEIE	BCL1IE	HLVDIE	TMR3IE	CCP2IE	60

Legend: — = unimplemented, read as ‘0’. Shaded cells are not used during Flash/EEPROM access.

Note 1: Bit 21 of TBLPTRU allows access to the device Configuration bits.

NOTES:

© 2008 Microchip Technology Inc.

7.0 EXTERNAL MEMORY BUS

Note: The External Memory Bus is not implemented on PIC18F6527/6622/6627/6722 (64-pin) devices.

The External Memory Bus (EMB) allows the device to access external memory devices (such as Flash, EPROM, SRAM, etc.) as program or data memory. It supports both 8-bit and 16-bit Data Width modes and four address widths from 8 to 20 bits.

The bus is implemented with 28 pins, multiplexed across four I/O ports. Three ports (PORTD, PORTE and PORTH) are multiplexed with the address/data bus for a total of 20 available lines, while PORTJ is multiplexed with the bus control signals.

A list of the pins and their functions is provided in Table 7-1.

TABLE 7-1: PIC18F8527/8622/8627/8722 EXTERNAL BUS – I/O PORT FUNCTIONS

Name	Port	Bit	External Memory Bus Function
RD0/AD0	PORTD	0	Address bit 0 or Data bit 0
RD1/AD1	PORTD	1	Address bit 1 or Data bit 1
RD2/AD2	PORTD	2	Address bit 2 or Data bit 2
RD3/AD3	PORTD	3	Address bit 3 or Data bit 3
RD4/AD4	PORTD	4	Address bit 4 or Data bit 4
RD5/AD5	PORTD	5	Address bit 5 or Data bit 5
RD6/AD6	PORTD	6	Address bit 6 or Data bit 6
RD7/AD7	PORTD	7	Address bit 7 or Data bit 7
RE0/AD8	PORTE	0	Address bit 8 or Data bit 8
RE1/AD9	PORTE	1	Address bit 9 or Data bit 9
RE2/AD10	PORTE	2	Address bit 10 or Data bit 10
RE3/AD11	PORTE	3	Address bit 11 or Data bit 11
RE4/AD12	PORTE	4	Address bit 12 or Data bit 12
RE5/AD13	PORTE	5	Address bit 13 or Data bit 13
RE6/AD14	PORTE	6	Address bit 14 or Data bit 14
RE7/AD15	PORTE	7	Address bit 15 or Data bit 15
RH0/A16	PORTH	0	Address bit 16
RH1/A17	PORTH	1	Address bit 17
RH2/A18	PORTH	2	Address bit 18
RH3/A19	PORTH	3	Address bit 19
RJ0/ALE	PORTJ	0	Address Latch Enable (ALE) Control pin
RJ1/$\overline{OE}$	PORTJ	1	Output Enable ($\overline{OE}$) Control pin
RJ2/$\overline{WRL}$	PORTJ	2	Write Low ($\overline{WRL}$) Control pin
RJ3/$\overline{WRH}$	PORTJ	3	Write High ($\overline{WRH}$) Control pin
RJ4/BA0	PORTJ	4	Byte Address bit 0 (BA0)
RJ5/$\overline{CE}$	PORTJ	5	Chip Enable ($\overline{CE}$) Control pin
RJ6/$\overline{LB}$	PORTJ	6	Lower Byte Enable ($\overline{LB}$) Control pin
RJ7/$\overline{UB}$	PORTJ	7	Upper Byte Enable ($\overline{UB}$) Control pin

Note: For the sake of clarity, only I/O port and external bus assignments are shown here. One or more additional multiplexed features may be available on some pins.

7.1 External Memory Bus Control

The operation of the interface is controlled by the MEMCON register (Register 7-1). This register is available in all program memory operating modes except Microcontroller mode. In this mode, the register is disabled and cannot be written to.

The EBDIS bit (MEMCON<7>) controls the operation of the bus and related port functions. Clearing EBDIS enables the interface and disables the I/O functions of the ports, as well as any other functions multiplexed to those pins. Setting the bit enables the I/O ports and other functions but allows the interface to override everything else on the pins when an external memory operation is required. By default, the external bus is always enabled and disables all other I/O.

The operation of the EBDIS bit is also influenced by the program memory mode being used. This is discussed in more detail in **Section 7.4 "Program Memory Modes and the External Memory Bus"**.

The WAIT bits allow for the addition of wait states to external memory operations. The use of these bits is discussed in **Section 7.3 "Wait States"**.

The WM bits select the particular operating mode used when the bus is operating in 16-bit Data Width mode. These are discussed in more detail in **Section 7.5 "16-Bit Data Width Modes"**. These bits have no effect when an 8-bit Data Width mode is selected.

WM<1:0>: TBLWT Operation with 16-Bit Data Bus Width Select bits

1x = Word Write mode: TABLAT0 and TABLAT1 word output, $\overline{WRH}$ active when TABLAT1 written

01 = Byte Select mode: TABLAT data copied on both MSB and LSB; $\overline{WRH}$ and ($\overline{UB}$ or $\overline{LB}$) will activate

REGISTER 7-1: MEMCON: EXTERNAL MEMORY BUS CONTROL REGISTER

R/W-0	U-0	R/W-0	R/W-0	U-0	U-0	R/W-0	R/W-0
EBDIS	—	WAIT1	WAIT0	—	—	WM1	WM0
bit 7							bit 0

Legend:			
R = Readable bit	W = Writable bit	U = Unimplemented bit, read as '0'	
-n = Value at POR	'1' = Bit is set	'0' = Bit is cleared	x = Bit is unknown

bit 7 **EBDIS**: External Bus Disable bit
- 1 = External bus enabled when microcontroller accesses external memory; otherwise, all external bus drivers are mapped as I/O ports
- 0 = External bus always enabled, I/O ports are disabled

bit 6 **Unimplemented**: Read as '0'

bit 5-4 **WAIT<1:0>:** Table Reads and Writes Bus Cycle Wait Count bits
- 11 = Table reads and writes will wait 0 TCY
- 10 = Table reads and writes will wait 1 TCY
- 01 = Table reads and writes will wait 2 TCY
- 00 = Table reads and writes will wait 3 TCY

bit 3-2 **Unimplemented**: Read as '0'

bit 1-0 **WM<1:0>:** TBLWT Operation with 16-Bit Data Bus Width Select bits
- 1 = Result was negative
- 0 = Result was positive

© 2008 Microchip Technology Inc.

7.2 Address and Data Width

PIC18F8527/8622/8627/8722 devices can be independently configured for different address and data widths on the same memory bus. Both address and data width are set by Configuration bits in the CONFIG3L register. As Configuration bits, this means that these options can only be configured by programming the device and are not controllable in software.

The BW bit selects an 8-bit or 16-bit data bus width. Setting this bit (default) selects a data width of 16 bits.

The ADW<1:0> bits determine the address bus width. The available options are 20-bit (default), 16-bit, 12-bit and 8-bit. Selecting any of the options other than 20-bit width makes a corresponding number of high-order lines available for I/O functions; these pins are no longer affected by the setting of the EBDIS bit. For example, selecting a 16-bit Address mode (ADW<1:0> = `10`) disables A<19:16> and allows PORTH<3:0> to function without interruptions from the bus. Using smaller address widths allows users to tailor the memory bus to the size of the external memory space for a particular design while freeing up pins for dedicated I/O operation.

Because the ADW bits have the effect of disabling pins for memory bus operations, it is important to always select an address width at least equal to the data width. If 8-bit or 12-bit address widths are used with a 16-bit data width, the upper bits of data will not be available on the bus.

All combinations of address and data widths require multiplexing of address and data information on the same lines. The address and data multiplexing, as well as I/O ports made available by the use of smaller address widths, are summarized in Table 7-2.

7.2.1 21-BIT ADDRESSING

As an extension of 20-bit address width operation, the External Memory Bus can also fully address a 2 Mbyte memory space. This is done by using the Bus Address bit 0 (BA0) control line as the Least Significant bit of the address. The $\overline{UB}$ and $\overline{LB}$ control signals may also be used with certain memory devices to select the upper and lower bytes within a 16-bit wide data word.

This addressing mode is available in both 8-bit and certain 16-bit Data Width modes. Additional details are provided in **Section 7.5.3 “16-bit Byte Select Mode”** and **Section 7.6 “8-Bit Data Width Modes”**.

7.3 Wait States

While it may be assumed that external memory devices will operate at the microcontroller clock rate, this is often not the case. In fact, many devices require longer times to write or retrieve data than the time allowed by the execution of table read or table write operations.

To compensate for this, the External Memory Bus can be configured to add a fixed delay to each table operation using the bus. Wait states are enabled by setting the WAITx bit. When enabled, the amount of delay is set by the WAIT<1:0> bits (MEMCON<5:4>). The delay is based on multiples of microcontroller instruction cycle time and are added following the instruction cycle when the table operation is executed. The range is from no delay to 3 TCY (default value).

TABLE 7-2: ADDRESS AND DATA LINES FOR DIFFERENT ADDRESS AND DATA WIDTHS

Data Width	Address Width	Multiplexed Data and Address Lines (and Corresponding Ports)	Address-Only Lines (and Corresponding Ports)	Ports Available for I/O
8-bit	8-bit	AD<7:0> (PORTD<7:0>)	—	All of PORTE and PORTH
	12-bit		AD<11:8> (PORTE<3:0>)	PORTE<7:4>, All of PORTH
	16-bit		AD<15:8> (PORTE<7:0>)	All of PORTH
	20-bit		A<19:16>, AD<15:8> (PORTH<3:0>, PORTE<7:0>)	—
16-bit	16-bit	AD<15:0> (PORTD<7:0>, PORTE<7:0>)	—	All of PORTH
	20-bit		A<19:16> (PORTH<3:0>)	—

7.4 Program Memory Modes and the External Memory Bus

PIC18F8527/8622/8627/8722 devices are capable of operating in any one of four program memory modes, using combinations of on-chip and external program memory. The functions of the multiplexed port pins depends on the program memory mode selected, as well as the setting of the EBDIS bit.

In **Microcontroller Mode,** the bus is not active and the pins have their port functions only. Writes to the MEMCOM register are not permitted. The Reset value of EBDIS (‘0’) is ignored and EMB pins behave as I/O ports.

In **Microprocessor Mode**, the external bus is always active and the port pins have only the external bus function. The value of EBDIS is ignored.

In **Microprocessor with Boot Block** or **Extended Microcontroller Mode,** the external program memory bus shares I/O port functions on the pins. When the device is fetching or doing table read/table write operations on the external program memory space, the pins will have the external bus function. If the device is fetching and accessing internal program memory locations only, the EBDIS control bit will change the pins from external memory to I/O port functions. When EBDIS = 0, the pins function as the external bus. When EBDIS = 1, the pins function as I/O ports.

If the device fetches or accesses external memory while EBDIS = 1, the pins will switch from I/O to external bus. If the EBDIS bit is set by a program executing from external memory, the action of setting the bit will be delayed until the program branches into the internal memory. At that time, the pins will change from external bus to I/O ports.

If the device is executing out of internal memory when EBDIS = 0, the memory bus address/data and control pins will not be active. They will go to a state where the active address/data pins are tri-state; the $\overline{CE}$, $\overline{OE}$, $\overline{WRH}$, $\overline{WRL}$, $\overline{UB}$ and $\overline{LB}$ signals are ‘1’; and ALE and BA0 are ‘0’. Note that only those pins associated with the current address width are forced to tri-state; the other pins continue to function as I/O. In the case of 16-bit address width, for example, only AD<15:0> (PORTD and PORTE) are affected; A<19:16> (PORTH<3:0>) continue to function as I/O.

In all external memory modes, the bus takes priority over any other peripherals that may share pins with it. This includes the Parallel Slave Port and serial communications modules which would otherwise take priority over the I/O port.

7.5 16-Bit Data Width Modes

In 16-Bit Data Width mode, the External Memory Bus can be connected to external memories in three different configurations:

- 16-bit Byte Write
- 16-bit Word Write
- 16-bit Byte Select

The configuration to be used is determined by the WM1:WM0 bits in the MEMCON register (MEMCON<1:0>). These three different configurations allow the designer maximum flexibility in using both 8-bit and 16-bit devices with 16-bit data.

For all 16-bit modes, the Address Latch Enable (ALE) pin indicates that the address bits AD<15:0> are available on the external memory interface bus. Following the address latch, the Output Enable signal ($\overline{OE}$) will enable both bytes of program memory at once to form a 16-bit instruction word. The Chip Enable signal ($\overline{CE}$) is active at any time that the microcontroller accesses external memory, whether reading or writing; it is inactive (asserted high) whenever the device is in Sleep mode.

In Byte Select mode, JEDEC standard Flash memories will require BA0 for the byte address line and one I/O line to select between Byte and Word mode. The other 16-bit modes do not need BA0. JEDEC standard static RAM memories will use the $\overline{UB}$ or $\overline{LB}$ signals for byte selection.

© 2008 Microchip Technology Inc.

7.5.1 16-BIT BYTE WRITE MODE

Figure 7-1 shows an example of 16-bit Byte Write mode for PIC18F8527/8622/8627/8722 devices. This mode is used for two separate 8-bit memories connected for 16-bit operation. This generally includes basic EPROM and Flash devices. It allows table writes to byte-wide external memories.

During a TBLWT instruction cycle, the TABLAT data is presented on the upper and lower bytes of the AD<15:0> bus. The appropriate $\overline{\text{WRH}}$ or $\overline{\text{WRL}}$ control line is strobed on the LSb of the TBLPTR.

FIGURE 7-1: 16-BIT BYTE WRITE MODE EXAMPLE

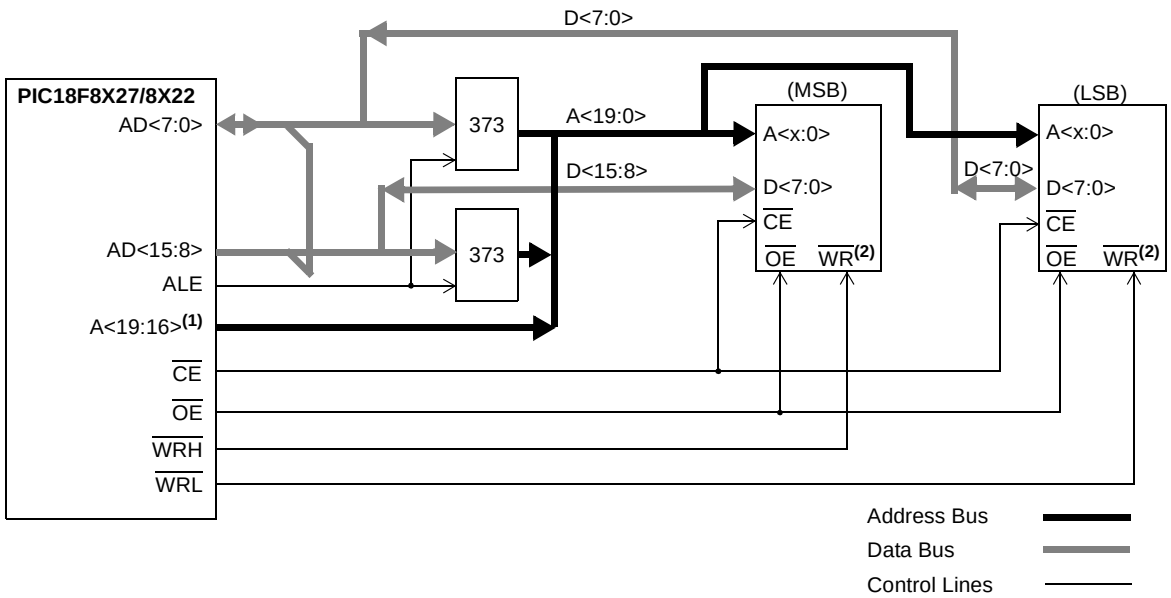

Note 1: Upper-order address lines are used only for 20-bit address widths.

2: This signal only applies to table writes. See **Section 6.1 "Table Reads and Table Writes"**.

7.5.2 16-BIT WORD WRITE MODE

Figure 7-2 shows an example of 16-bit Word Write mode for PIC18F8527/8622/8627/8722 devices. This mode is used for word-wide memories which includes some of the EPROM and Flash-type memories. This mode allows opcode fetches and table reads from all forms of 16-bit memory and table writes to any type of word-wide external memories. This method makes a distinction between TBLWT cycles to even or odd addresses.

During a TBLWT cycle to an even address (TBLPTR<0> = 0), the TABLAT data is transferred to a holding latch and the external address data bus is tri-stated for the data portion of the bus cycle. No write signals are activated.

During a TBLWT cycle to an odd address (TBLPTR<0> = 1), the TABLAT data is presented on the upper byte of the AD15:AD0 bus. The contents of the holding latch are presented on the lower byte of the AD<15:0> bus.

The $\overline{WRH}$ signal is strobed for each write cycle; the $\overline{WRL}$ pin is unused. The signal on the BA0 pin indicates the Least Significant bit of TBLPTR but it is left unconnected. Instead, the $\overline{UB}$ and $\overline{LB}$ signals are active to select both bytes. The obvious limitation to this method is that the table write must be done in pairs on a specific word boundary to correctly write a word location.

FIGURE 7-2: 16-BIT WORD WRITE MODE EXAMPLE

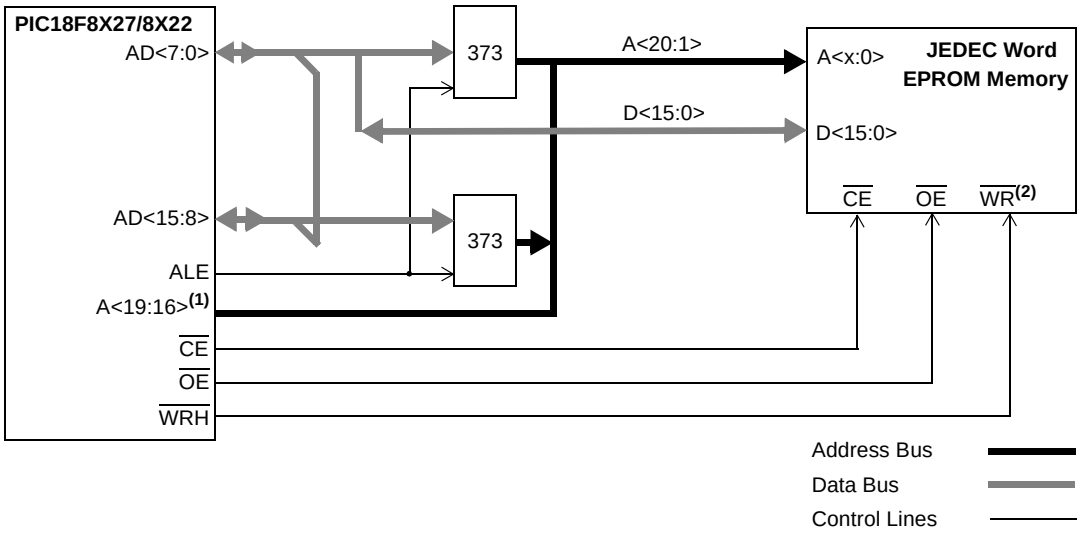

Note 1: Upper-order address lines are used only for 20-bit address widths.

2: This signal only applies to table writes. See **Section 6.1 "Table Reads and Table Writes"**.

© 2008 Microchip Technology Inc.

7.5.3 16-BIT BYTE SELECT MODE

Figure 7-3 shows an example of 16-bit Byte Select mode. This mode allows table write operations to word-wide external memories with byte selection capability. This generally includes both word-wide Flash and SRAM devices.

During a TBLWT cycle, the TABLAT data is presented on the upper and lower byte of the AD<15:0> bus. The $\overline{WRH}$ signal is strobed for each write cycle; the $\overline{WRL}$ pin is not used. The BA0 or $\overline{UB}$/$\overline{LB}$ signals are used to select the byte to be written, based on the Least Significant bit of the TBLPTR register.

Flash and SRAM devices use different control signal combinations to implement Byte Select mode. JEDEC standard Flash memories require that a controller I/O port pin be connected to the memory's BYTE/$\overline{WORD}$ pin to provide the select signal. They also use the BA0 signal from the controller as a byte address. JEDEC standard static RAM memories, on the other hand, use the $\overline{UB}$ or $\overline{LB}$ signals to select the byte.

FIGURE 7-3: 16-BIT BYTE SELECT MODE EXAMPLE

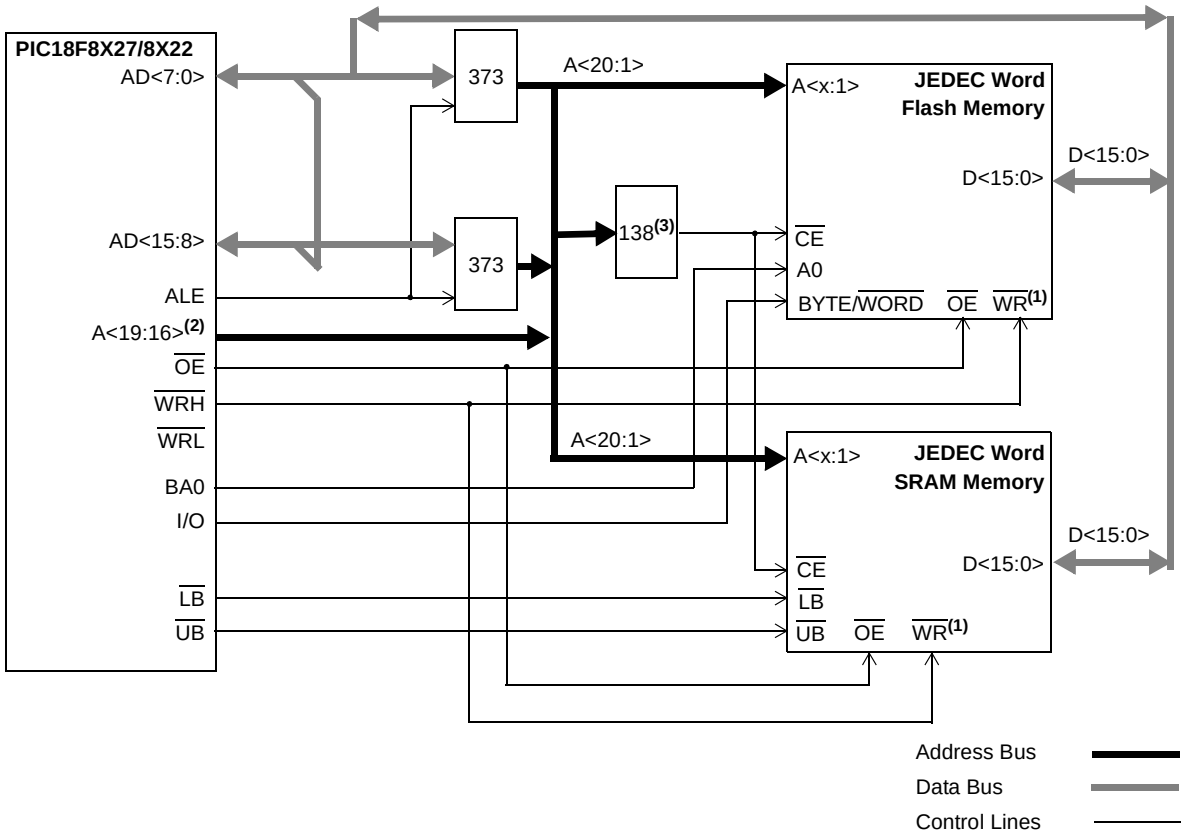

Note 1: This signal only applies to table writes. See **Section 6.1 "Table Reads and Table Writes"**.

2: Upper-order address lines are used only for 20-bit address width.

3: Demultiplexing is only required when multiple memory devices are accessed.

7.5.4 16-BIT MODE TIMING

The presentation of control signals on the External Memory Bus is different for the various operating modes. Typical signal timing diagrams are shown in Figure 7-4 through Figure 7-6. All examples assume either 20-bit or 21-bit address widths.

FIGURE 7-4: EXTERNAL MEMORY BUS TIMING FOR TBLRD WITH A 1 TCY WAIT STATE (MICROPROCESSOR MODE)

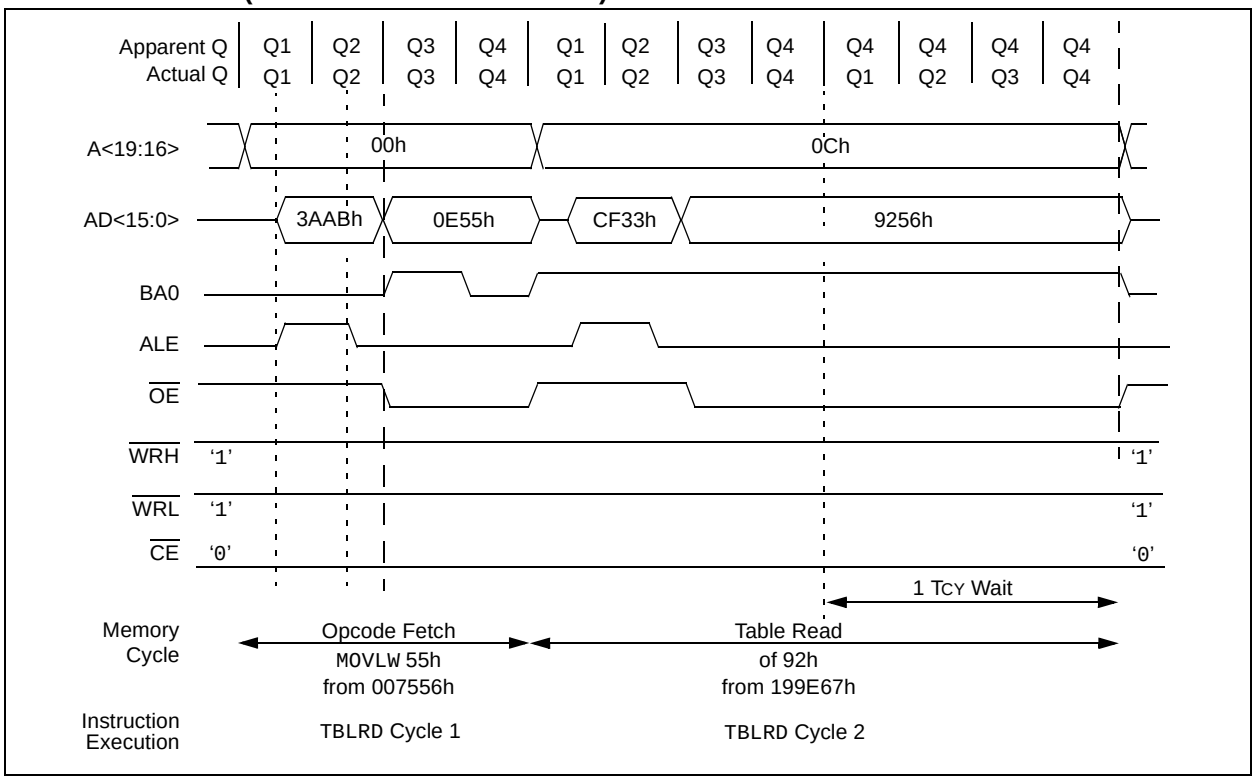

FIGURE 7-5: EXTERNAL MEMORY BUS TIMING FOR TBLRD (EXTENDED MICROCONTROLLER MODE)

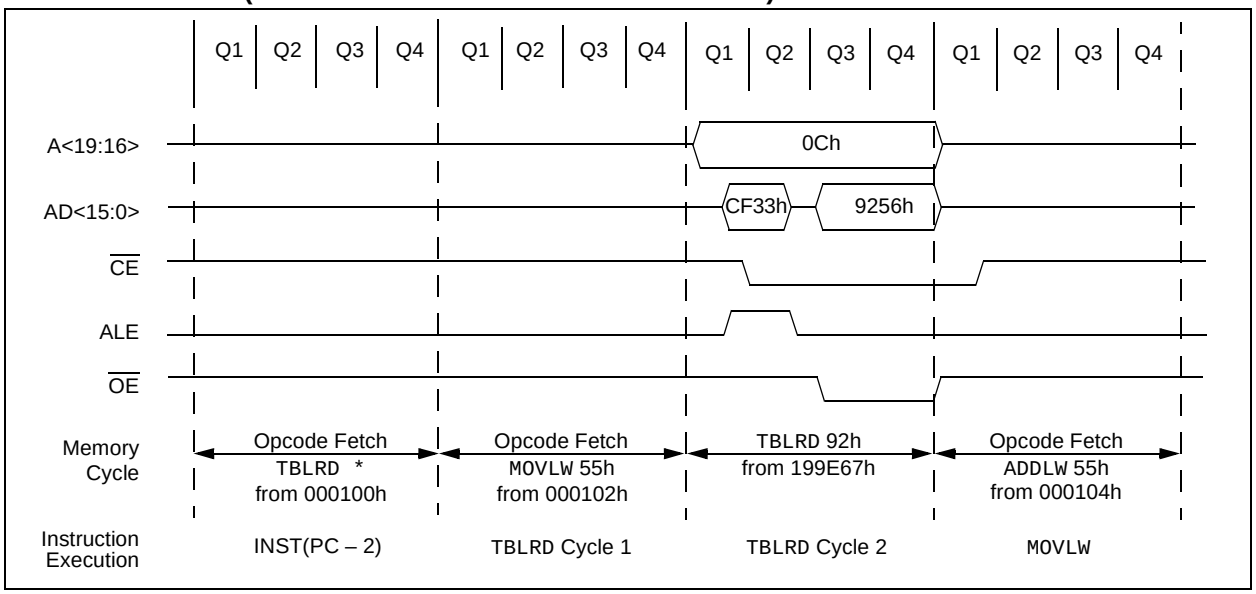

© 2008 Microchip Technology Inc.

FIGURE 7-6: EXTERNAL MEMORY BUS TIMING FOR SLEEP (MICROPROCESSOR MODE)

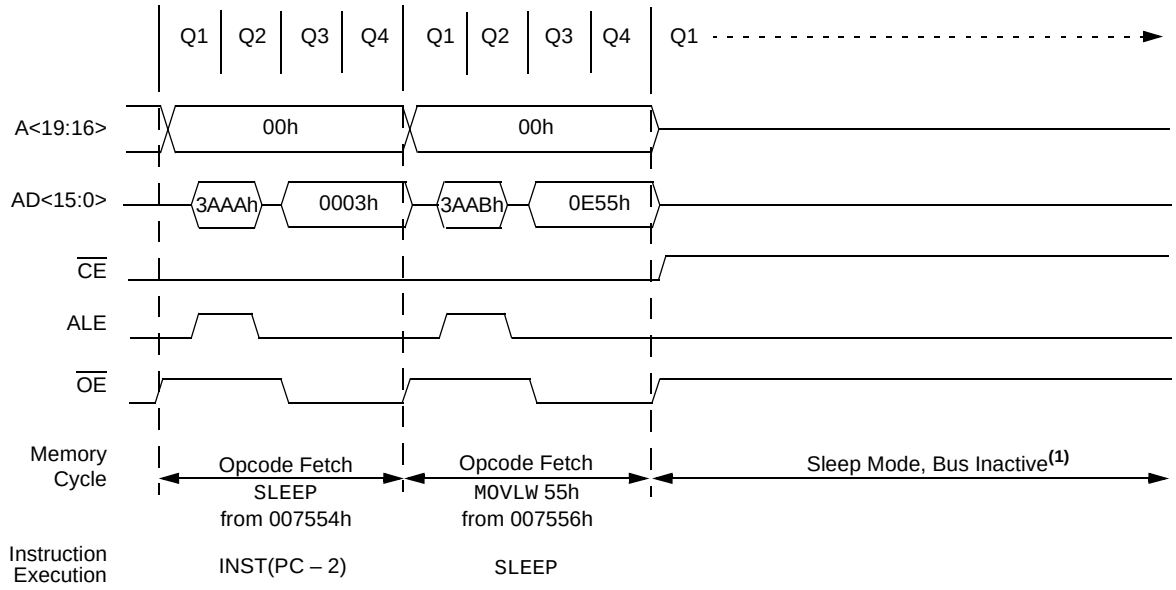

Note 1: Bus becomes inactive regardless of power-managed mode entered when SLEEP is executed.

7.6 8-Bit Data Width Modes

In 8-Bit Data Width mode, the External Memory Bus operates only in Multiplexed mode; that is, data shares the 8 least significant bits of the address bus.

Figure 7-7 shows an example of 8-bit Multiplexed mode for PIC18F8527/8622/8627/8722 devices. This mode is used for a single 8-bit memory connected for 16-bit operation. The instructions will be fetched as two 8-bit bytes on a shared data/address bus. The two bytes are sequentially fetched within one instruction cycle (TCY). Therefore, the designer must choose external memory devices according to timing calculations based on 1/2 TCY (2 times the instruction rate). For proper memory speed selection, glue logic propagation delay times must be considered along with setup and hold times.

The Address Latch Enable (ALE) pin indicates that the address bits A<15:0> are available on the External Memory Interface bus. The Output Enable signal ($\overline{OE}$) will enable one byte of program memory for a portion of the instruction cycle, then BA0 will change and the second byte will be enabled to form the 16-bit instruction word. The least significant bit of the address, BA0, must be connected to the memory devices in this mode. The Chip Enable signal ($\overline{CE}$) is active at any time that the microcontroller accesses external memory, whether reading or writing; it is inactive (asserted high) whenever the device is in Sleep mode.

This generally includes basic EPROM and Flash devices. It allows table writes to byte-wide external memories.

The appropriate level of BA0 control line is strobed on the LSb of the TBLPTR.

FIGURE 7-7: 8-BIT MULTIPLEXED MODE EXAMPLE

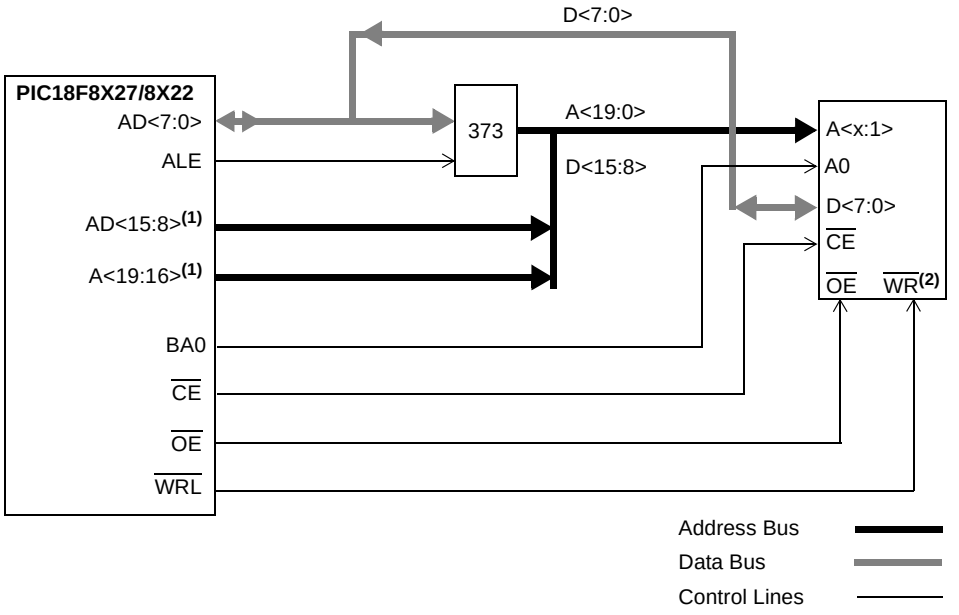

Note 1: Upper-order address bits are used only for 20-bit address width. The upper AD byte is used for all address widths except 8-bit.

2: This signal only applies to table writes. See **Section 6.1 "Table Reads and Table Writes"**.

© 2008 Microchip Technology Inc.

7.6.1 8-BIT MODE TIMING

The presentation of control signals on the External Memory Bus is different for the various operating modes. Typical signal timing diagrams are shown in Figure 7-8 through Figure 7-11.

FIGURE 7-8: EXTERNAL BUS TIMING FOR TBLRD (MICROPROCESSOR MODE)

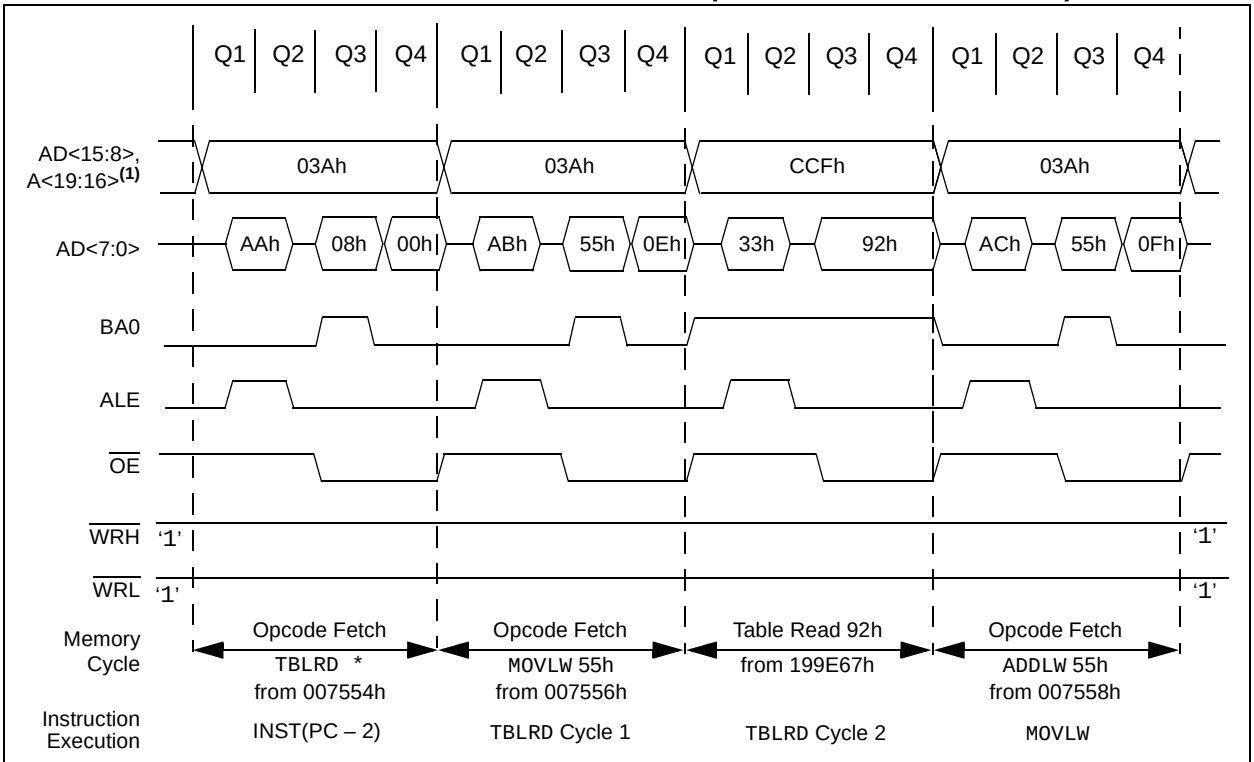

Note 1: The address lines actually used depends on the address width selected. This example assumes 20-bit addressing.

FIGURE 7-9: EXTERNAL BUS TIMING FOR TBLRD (EXTENDED MICROCONTROLLER MODE)

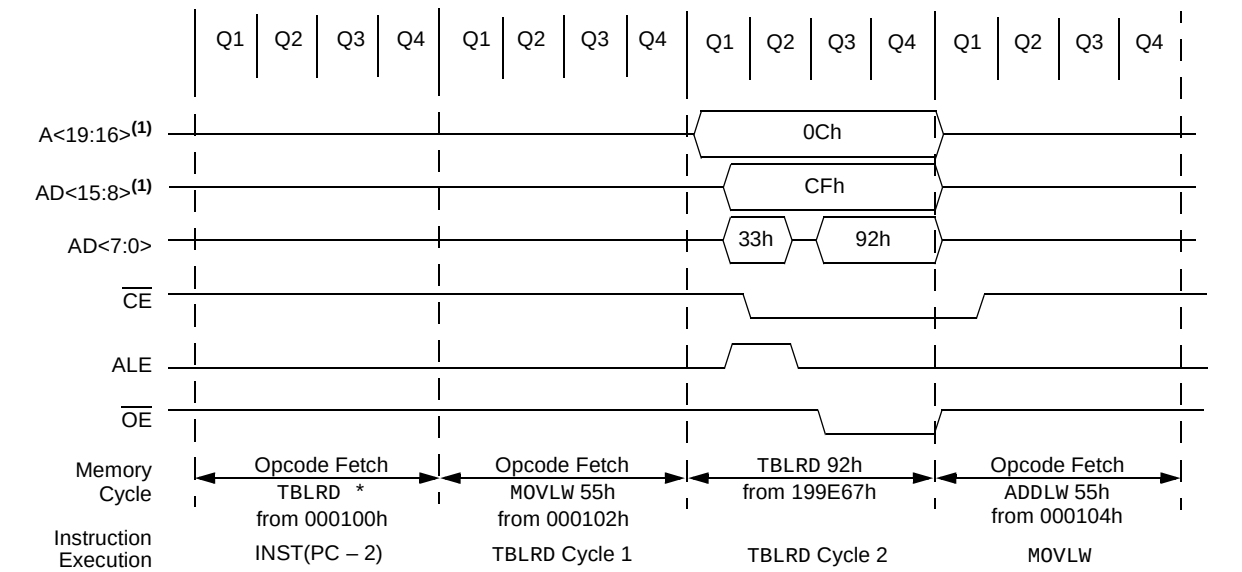

Note 1: The address lines actually used depends on the address width selected. This example assumes 20-bit addressing.

FIGURE 7-10: EXTERNAL MEMORY BUS TIMING FOR SLEEP (MICROPROCESSOR MODE)

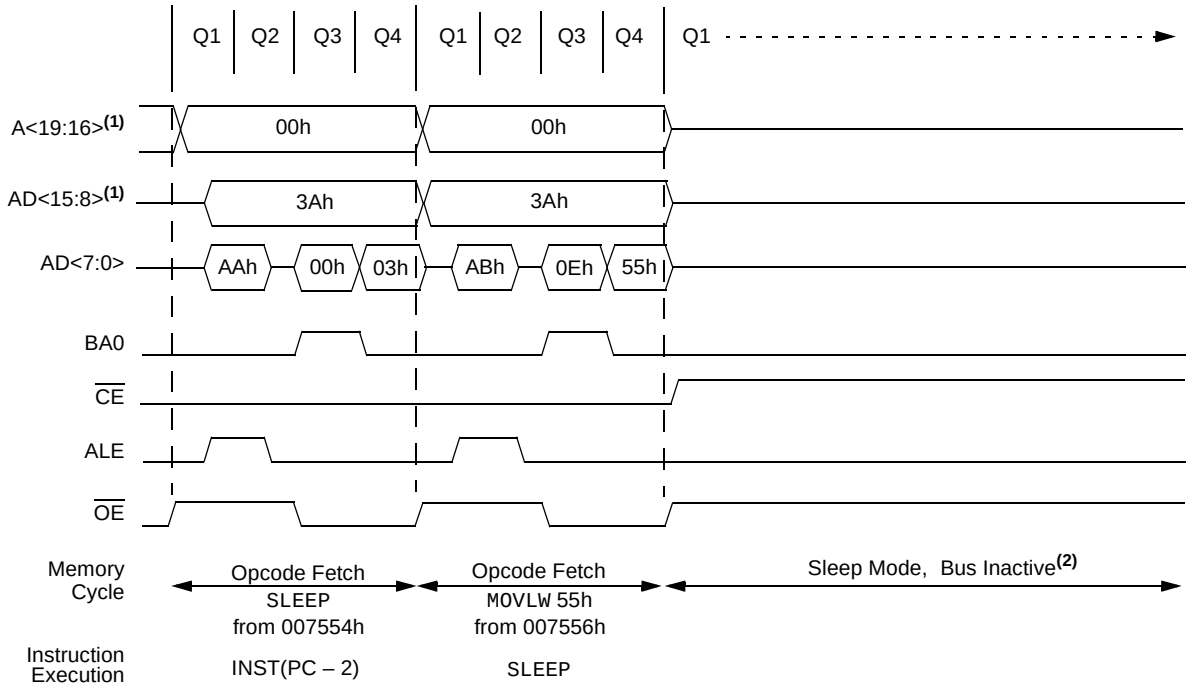

Note 1: The address lines actually used depends on the address width selected. This example assumes 20-bit addressing.

2: Bus becomes inactive regardless of power-managed mode entered when SLEEP is executed.

FIGURE 7-11: TYPICAL OPCODE FETCH, 8-BIT MODE

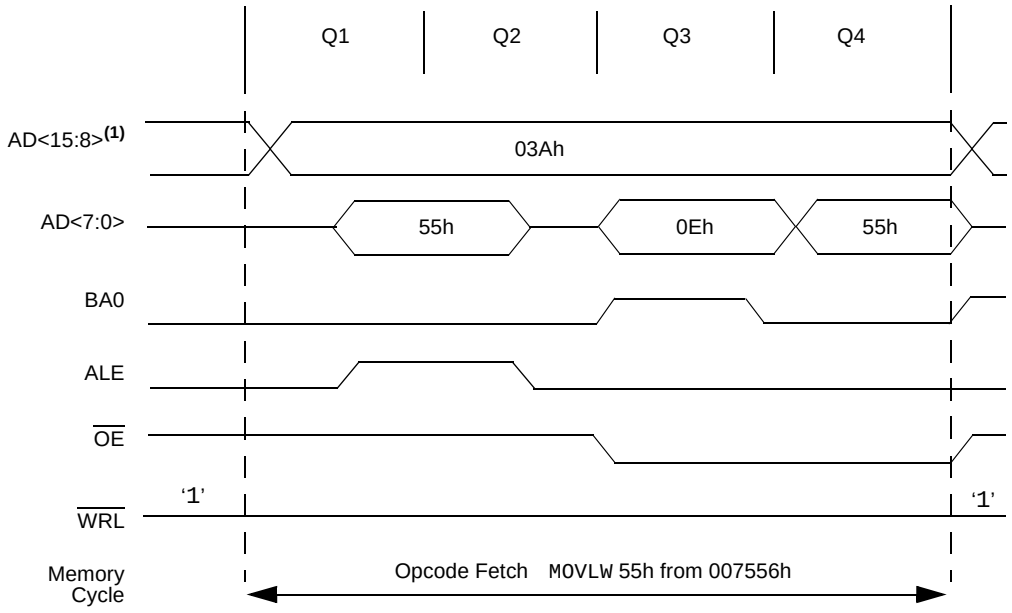

Note 1: The address lines actually used depends on the address width selected. This example assumes 16-bit addressing.

© 2008 Microchip Technology Inc.

7.7 Operation in Power-Managed Modes

In alternate power-managed Run modes, the external bus continues to operate normally. If a clock source with a lower speed is selected, bus operations will run at that speed. In these cases, excessive access times for the external memory may result if wait states have been enabled and added to external memory operations. If operations in a lower power Run mode are anticipated, users should provide in their applications for adjusting memory access times at the lower clock speeds.

In Sleep and Idle modes, the microcontroller core does not need to access data; bus operations are suspended. The state of the external bus is frozen with the address/data pins and most of the control pins holding at the same state they were in when the mode was invoked. The only potential changes are the $\overline{CE}$, $\overline{LB}$ and $\overline{UB}$ pins which are held at logic high.

TABLE 7-3: SUMMARY OF REGISTERS ASSOCIATED WITH POWER-MANAGED MODES

Name	Bit 7	Bit 6	Bit 5	Bit 4	Bit 3	Bit 2	Bit 1	Bit 0	Reset Values on page
MEMCON(1)	EBDIS	—	WAIT1	WAIT0	—	—	WM1	WM0	60
CONFIG3L(2)	WAIT	BW	ABW1	ABW0	—	—	PM1	PM0	302
CONFIG3H	MCLRE	—	—	—	—	LPT1OSC	ECCPMX(2)	CCP2MX	303

Legend: — = unimplemented, read as '0'. Shaded cells are not used by the External Memory Bus.

Note 1: This register is not implemented on 64-pin devices.

2: Unimplemented in PIC18F6527/6622/6627/6722 devices.

NOTES:

© 2008 Microchip Technology Inc.

8.0 DATA EEPROM MEMORY

The data EEPROM is a nonvolatile memory array, separate from the data RAM and program memory, that is used for long-term storage of program data. It is not directly mapped in either the register file or program memory space, but is indirectly addressed through the Special Function Registers (SFRs). The EEPROM is readable and writable during normal operation over the entire VDD range.

Five SFRs are used to read and write to the data EEPROM, as well as the program memory. They are:

- EECON1
- EECON2
- EEDATA
- EEADR
- EEADRH

The data EEPROM allows byte read and write. When interfacing to the data memory block, EEDATA holds the 8-bit data for read/write and the EEADRH:EEADR register pair holds the address of the EEPROM location being accessed.

The EEPROM data memory is rated for high erase/write cycle endurance. A byte write automatically erases the location and writes the new data (erase-before-write). The write time is controlled by an on-chip timer; it will vary with voltage and temperature, as well as from chip-to-chip. Please refer to parameter D122 (Table 28-1 in **Section 28.0 "Electrical Characteristics"**) for exact limits.

8.1 EEADR and EEADRH Registers

The EEADRH:EEADR register pair is used to address the data EEPROM for read and write operations. EEADRH holds the two MSbs of the address; the upper 6 bits are ignored. The 10-bit range of the pair can address a memory range of 1024 bytes (00h to 3FFh).

8.2 EECON1 and EECON2 Registers

Access to the data EEPROM is controlled by two registers: EECON1 and EECON2. These are the same registers which control access to the program memory and are used in a similar manner for the data EEPROM.

The EECON1 register (Register) is the control register for data and program memory access. Control bit EEPGD determines if the access will be to program or data EEPROM memory. When clear, operations will access the data EEPROM memory. When set, program memory is accessed.

Control bit CFGS determines if the access will be to the Configuration registers or to program memory/data EEPROM memory. When set, subsequent operations access Configuration registers. When CFGS is clear, the EEPGD bit selects either program Flash or data EEPROM memory.

The WREN bit, when set, will allow a write operation. On power-up, the WREN bit is clear. The WRERR bit is set in hardware when the WREN bit is set and cleared when the internal programming timer expires and the write operation is complete.

Note:	During normal operation, the WRERR is read as '1'. This can indicate that a write operation was prematurely terminated by a Reset, or a write operation was attempted improperly.

The WR control bit initiates write operations. The bit cannot be cleared, only set, in software; it is cleared in hardware at the completion of the write operation.

Note:	The EEIF interrupt flag bit (PIR2<4>) is set when the write is complete. It must be cleared in software.

Control bits, RD and WR, start read and erase/write operations, respectively. These bits are set by firmware and cleared by hardware at the completion of the operation.

The RD bit cannot be set when accessing program memory (EEPGD = 1). Program memory is read using table read instructions. See **Section 6.1 "Table Reads and Table Writes"** regarding table reads.

The EECON2 register is not a physical register. It is used exclusively in the memory write and erase sequences. Reading EECON2 will read all '0's.

REGISTER 8-1: EECON1: DATA EEPROM CONTROL REGISTER 1

R/W-x	R/W-x	U-0	R/W-0	R/W-x	R/W-0	R/S-0	R/S-0
EEPGD	CFGS	—	FREE	WRERR(1)	WREN	WR	RD
bit 7							bit 0

Legend:			
R = Readable bit	W = Writable bit	U = Unimplemented bit, read as ‘0’	
-n = Value at POR	‘1’ = Bit is set	‘0’ = Bit is cleared	x = Bit is unknown

bit 7 **EEPGD:** Flash Program or Data EEPROM Memory Select bit
1 = Access Flash program memory
0 = Access data EEPROM memory

bit 6 **CFGS:** Flash Program/Data EEPROM or Configuration Select bit
1 = Access Configuration registers
0 = Access Flash program or data EEPROM memory

bit 5 **Unimplemented:** Read as ‘0’

bit 4 **FREE:** Flash Row Erase Enable bit
1 = Erase the program memory row addressed by TBLPTR on the next WR command (cleared by completion of erase operation)
0 = Perform write only

bit 3 **WRERR:** Flash Program/Data EEPROM Error Flag bit(1)
1 = A write operation is prematurely terminated (any Reset during self-timed programming in normal operation, or an improper write attempt)
0 = The write operation completed

bit 2 **WREN:** Flash Program/Data EEPROM Write Enable bit
1 = Allows write cycles to Flash program/data EEPROM
0 = Inhibits write cycles to Flash program/data EEPROM

bit 1 **WR:** Write Control bit
1 = Initiates a data EEPROM erase/write cycle or a program memory erase cycle or write cycle. (The operation is self-timed and the bit is cleared by hardware once write is complete. The WR bit can only be set (not cleared) in software.)
0 = Write cycle to the EEPROM is complete

bit 0 **RD:** Read Control bit
1 = Initiates an EEPROM read
(Read takes one cycle. RD is cleared in hardware. The RD bit can only be set (not cleared) in software. RD bit cannot be set when EEPGD = 1 or CFGS = 1.)
0 = Does not initiate an EEPROM read

Note 1: When a WRERR occurs, the EEPGD and CFGS bits are not cleared. This allows tracing of the error condition.

© 2008 Microchip Technology Inc.

8.3 Reading the Data EEPROM Memory

To read a data memory location, the user must write the address to the EEADRH:EEADR register pair, clear the EEPGD control bit (EECON1<7>) and then set control bit, RD (EECON1<0>). The data is available on the very next instruction cycle; therefore, the EEDATA register can be read by the next instruction. EEDATA will hold this value until another read operation, or until it is written to by the user (during a write operation).

The basic process is shown in Example 8-1.

8.4 Writing to the Data EEPROM Memory

To write an EEPROM data location, the address must first be written to the EEADRH:EEADR register pair and the data written to the EEDATA register. The sequence in Example 8-2 must be followed to initiate the write cycle.

The write will not begin if this sequence is not exactly followed (write 55h to EECON2, write 0AAh to EECON2, then set WR bit) for each byte. It is strongly recommended that interrupts be disabled during this code segment.

Additionally, the WREN bit in EECON1 must be set to enable writes. This mechanism prevents accidental writes to data EEPROM due to unexpected code execution (i.e., runaway programs). The WREN bit should be kept clear at all times, except when updating the EEPROM. The WREN bit is not cleared by hardware.

After a write sequence has been initiated, EECON1, EEADRH:EEADR and EEDATA cannot be modified. The WR bit will be inhibited from being set unless the WREN bit is set. The WREN bit must be set on a previous instruction. Both WR and WREN cannot be set with the same instruction.

At the completion of the write cycle, the WR bit is cleared in hardware and the EEPROM Interrupt Flag bit (EEIF) is set. The user may either enable this interrupt, or poll this bit. EEIF must be cleared by software.

8.5 Write Verify

Depending on the application, good programming practice may dictate that the value written to the memory should be verified against the original value. This should be used in applications where excessive writes can stress bits near the specification limit.

EXAMPLE 8-1: DATA EEPROM READ

```
MOVLW   DATA_EE_ADDRH      ;
MOVWF   EEADRH             ; Upper bits of Data Memory Address to read
MOVLW   DATA_EE_ADDR       ;
MOVWF   EEADR              ; Lower bits of Data Memory Address to read
BCF     EECON1, EEPGD      ; Point to DATA memory
BCF     EECON1, CFGS       ; Access EEPROM
BSF     EECON1, RD         ; EEPROM Read
MOVF    EEDATA, W          ; W = EEDATA
```

EXAMPLE 8-2: DATA EEPROM WRITE

```
                MOVLW   DATA_EE_ADDRH      ;
                MOVWF   EEADRH             ; Upper bits of Data Memory Address to write
                MOVLW   DATA_EE_ADDR       ;
                MOVWF   EEADR              ; Lower bits of Data Memory Address to write
                MOVLW   DATA_EE_DATA       ;
                MOVWF   EEDATA             ; Data Memory Value to write
                BCF     EECON1, EPGD       ; Point to DATA memory
                BCF     EECON1, CFGS       ; Access EEPROM
                BSF     EECON1, WREN       ; Enable writes

                BCF     INTCON, GIE        ; Disable Interrupts
                MOVLW   55h                ;
Required        MOVWF   EECON2             ; Write 55h
Sequence        MOVLW   0AAh               ;
                MOVWF   EECON2             ; Write 0AAh
                BSF     EECON1, WR         ; Set WR bit to begin write
                BSF     INTCON, GIE        ; Enable Interrupts

                                           ; User code execution
                BCF     EECON1, WREN       ; Disable writes on write complete (EEIF set)
```

8.6 Operation During Code-Protect

Data EEPROM memory has its own code-protect bits in Configuration Words. External read and write operations are disabled if code protection is enabled.

The microcontroller itself can both read and write to the internal data EEPROM regardless of the state of the code-protect Configuration bit. Refer to **Section 25.0 "Special Features of the CPU"** for additional information.

8.7 Protection Against Spurious Write

There are conditions when the device may not want to write to the data EEPROM memory. To protect against spurious EEPROM writes, various mechanisms have been implemented. On power-up, the WREN bit is cleared. In addition, writes to the EEPROM are blocked during the Power-up Timer period (T_{PWRT}, parameter 33).

The write initiate sequence and the WREN bit together help prevent an accidental write during brown-out, power glitch or software malfunction.

8.8 Using the Data EEPROM

The data EEPROM is a high-endurance, byte addressable array that has been optimized for the storage of frequently changing information (e.g., program variables or other data that are updated often). Frequently changing values will typically be updated more often than specification D124. If this is not the case, an array refresh must be performed. For this reason, variables that change infrequently (such as constants, IDs, calibration, etc.) should be stored in Flash program memory.

A simple data EEPROM refresh routine is shown in Example 8-3.

Note:	If data EEPROM is only used to store constants and/or data that changes often, an array refresh is likely not required. See specification D124.

EXAMPLE 8-3: DATA EEPROM REFRESH ROUTINE

```
        CLRF    EEADR              ; Start at address 0
        CLRF    EEADRH             ;
        BCF     EECON1, CFGS       ; Set for memory
        BCF     EECON1, EEPGD      ; Set for Data EEPROM
        BCF     INTCON, GIE        ; Disable interrupts
        BSF     EECON1, WREN       ; Enable writes
Loop                               ; Loop to refresh array
        BSF     EECON1, RD         ; Read current address
        MOVLW   55h                ;
        MOVWF   EECON2             ; Write 55h
        MOVLW   0AAh               ;
        MOVWF   EECON2             ; Write 0AAh
        BSF     EECON1, WR         ; Set WR bit to begin write
        BTFSC   EECON1, WR         ; Wait for write to complete
        BRA     $-2
        INCFSZ  EEADR, F           ; Increment address
        BRA     LOOP               ; Not zero, do it again
        INCFSZ  EEADRH, F          ; Increment the high address
        BRA     LOOP               ; Not zero, do it again

        BCF     EECON1, WREN       ; Disable writes
        BSF     INTCON, GIE        ; Enable interrupts
```


© 2008 Microchip Technology Inc.

TABLE 8-1: REGISTERS ASSOCIATED WITH DATA EEPROM MEMORY

Name	Bit 7	Bit 6	Bit 5	Bit 4	Bit 3	Bit 2	Bit 1	Bit 0	Reset Values on page
INTCON	GIE/GIEH	PEIE/GIEL	TMR0IE	INT0IE	RBIE	TMR0IF	INT0IF	RBIF	57
EEADRH	—	—	—	—	—	—	EEPROM Address Register High Byte		59
EEADR	EEPROM Address Register Low Byte								59
EEDATA	EEPROM Data Register								59
EECON2	EEPROM Control Register 2 (not a physical register)								59
EECON1	EEPGD	CFGS	—	FREE	WRERR	WREN	WR	RD	59
IPR2	OSCFIP	CMIP	—	EEIP	BCL1IP	HLVDIP	TMR3IP	CCP2IP	60
PIR2	OSCFIF	CMIF	—	EEIF	BCL1IF	HLVDIF	TMR3IF	CCP2IF	60
PIE2	OSCFIE	CMIE	—	EEIE	BCL1IE	HLVDIE	TMR3IE	CCP2IE	60

Legend: — = unimplemented, read as ‘0’. Shaded cells are not used during Flash/EEPROM access.

NOTES:

© 2008 Microchip Technology Inc.

9.0 8 x 8 HARDWARE MULTIPLIER

9.1 Introduction

All PIC18 devices include an 8 x 8 hardware multiplier as part of the ALU. The multiplier performs an unsigned operation and yields a 16-bit result that is stored in the product register pair, PRODH:PRODL. The multiplier's operation does not affect any flags in the STATUS register.

Making multiplication a hardware operation allows it to be completed in a single instruction cycle. This has the advantages of higher computational throughput and reduced code size for multiplication algorithms and allows the PIC18 devices to be used in many applications previously reserved for digital signal processors. A comparison of various hardware and software multiply operations, along with the savings in memory and execution time, is shown in Table 9-1.

9.2 Operation

Example 9-1 shows the instruction sequence for an 8 x 8 unsigned multiplication. Only one instruction is required when one of the arguments is already loaded in the WREG register.

Example 9-2 shows the sequence to do an 8 x 8 signed multiplication. To account for the sign bits of the arguments, each argument's Most Significant bit (MSb) is tested and the appropriate subtractions are done.

EXAMPLE 9-1: 8 x 8 UNSIGNED MULTIPLY ROUTINE

```
MOVF    ARG1, W     ;
MULWF   ARG2        ; ARG1 * ARG2 ->
                    ; PRODH:PRODL
```

EXAMPLE 9-2: 8 x 8 SIGNED MULTIPLY ROUTINE

```
MOVF    ARG1, W
MULWF   ARG2        ; ARG1 * ARG2 ->
                    ; PRODH:PRODL
BTFSC   ARG2, SB    ; Test Sign Bit
SUBWF   PRODH, F    ; PRODH = PRODH
                    ;         - ARG1
MOVF    ARG2, W
BTFSC   ARG1, SB    ; Test Sign Bit
SUBWF   PRODH, F    ; PRODH = PRODH
                    ;         - ARG2
```

TABLE 9-1: PERFORMANCE COMPARISON FOR VARIOUS MULTIPLY OPERATIONS

Routine	Multiply Method	Program Memory (Words)	Cycles (Max)	Time		
				@ 40 MHz	@ 10 MHz	@ 4 MHz
8 x 8 unsigned	Without hardware multiply	13	69	6.9 μs	27.6 μs	69 μs
	Hardware multiply	1	1	100 ns	400 ns	1 μs
8 x 8 signed	Without hardware multiply	33	91	9.1 μs	36.4 μs	91 μs
	Hardware multiply	6	6	600 ns	2.4 μs	6 μs
16 x 16 unsigned	Without hardware multiply	21	242	24.2 μs	96.8 μs	242 μs
	Hardware multiply	28	28	2.8 μs	11.2 μs	28 μs
16 x 16 signed	Without hardware multiply	52	254	25.4 μs	102.6 μs	254 μs
	Hardware multiply	35	40	4.0 μs	16.0 μs	40 μs

© 2008 Microchip Technology Inc.

Example 9-3 shows the sequence to do a 16 x 16 unsigned multiplication. Equation 9-1 shows the algorithm that is used. The 32-bit result is stored in four registers (RES3:RES0).

EQUATION 9-1: 16 x 16 UNSIGNED MULTIPLICATION ALGORITHM

$$
\begin{aligned}
RES3:RES0 &= ARG1H:ARG1L \bullet ARG2H:ARG2L \\
&= (ARG1H \bullet ARG2H \bullet 2^{16}) + \\
&\quad (ARG1H \bullet ARG2L \bullet 2^{8}) + \\
&\quad (ARG1L \bullet ARG2H \bullet 2^{8}) + \\
&\quad (ARG1L \bullet ARG2L)
\end{aligned}
$$

EXAMPLE 9-3: 16 x 16 UNSIGNED MULTIPLY ROUTINE

```
    MOVF    ARG1L, W
    MULWF   ARG2L           ; ARG1L * ARG2L->
                            ; PRODH:PRODL
    MOVFF   PRODH, RES1     ;
    MOVFF   PRODL, RES0     ;
;
    MOVF    ARG1H, W
    MULWF   ARG2H           ; ARG1H * ARG2H->
                            ; PRODH:PRODL
    MOVFF   PRODH, RES3     ;
    MOVFF   PRODL, RES2     ;
;
    MOVF    ARG1L, W
    MULWF   ARG2H           ; ARG1L * ARG2H->
                            ; PRODH:PRODL
    MOVF    PRODL, W        ;
    ADDWF   RES1, F         ; Add cross
    MOVF    PRODH, W        ; products
    ADDWFC  RES2, F         ;
    CLRF    WREG            ;
    ADDWFC  RES3, F         ;
;
    MOVF    ARG1H, W        ;
    MULWF   ARG2L           ; ARG1H * ARG2L->
                            ; PRODH:PRODL
    MOVF    PRODL, W        ;
    ADDWF   RES1, F         ; Add cross
    MOVF    PRODH, W        ; products
    ADDWFC  RES2, F         ;
    CLRF    WREG            ;
    ADDWFC  RES3, F         ;
```

Example 9-4 shows the sequence to do a 16 x 16 signed multiply. Equation 9-2 shows the algorithm used. The 32-bit result is stored in four registers (RES<3:0>). To account for the sign bits of the arguments, the MSb for each argument pair is tested and the appropriate subtractions are done.

EQUATION 9-2: 16 x 16 SIGNED MULTIPLICATION ALGORITHM

$$
\begin{aligned}
RES3:RES0 &= ARG1H:ARG1L \bullet ARG2H:ARG2L \\
&= (ARG1H \bullet ARG2H \bullet 2^{16}) + \\
&\quad (ARG1H \bullet ARG2L \bullet 2^{8}) + \\
&\quad (ARG1L \bullet ARG2H \bullet 2^{8}) + \\
&\quad (ARG1L \bullet ARG2L) + \\
&\quad (-1 \bullet ARG2H\langle 7\rangle \bullet ARG1H:ARG1L \bullet 2^{16}) + \\
&\quad (-1 \bullet ARG1H\langle 7\rangle \bullet ARG2H:ARG2L \bullet 2^{16})
\end{aligned}
$$

EXAMPLE 9-4: 16 x 16 SIGNED MULTIPLY ROUTINE

```
    MOVF    ARG1L, W
    MULWF   ARG2L           ; ARG1L * ARG2L ->
                            ; PRODH:PRODL
    MOVFF   PRODH, RES1     ;
    MOVFF   PRODL, RES0     ;
;
    MOVF    ARG1H, W
    MULWF   ARG2H           ; ARG1H * ARG2H ->
                            ; PRODH:PRODL
    MOVFF   PRODH, RES3     ;
    MOVFF   PRODL, RES2     ;
;
    MOVF    ARG1L, W
    MULWF   ARG2H           ; ARG1L * ARG2H ->
                            ; PRODH:PRODL
    MOVF    PRODL, W        ;
    ADDWF   RES1, F         ; Add cross
    MOVF    PRODH, W        ; products
    ADDWFC  RES2, F         ;
    CLRF    WREG            ;
    ADDWFC  RES3, F         ;
;
    MOVF    ARG1H, W        ;
    MULWF   ARG2L           ; ARG1H * ARG2L ->
                            ; PRODH:PRODL
    MOVF    PRODL, W        ;
    ADDWF   RES1, F         ; Add cross
    MOVF    PRODH, W        ; products
    ADDWFC  RES2, F         ;
    CLRF    WREG            ;
    ADDWFC  RES3, F         ;
;
    BTFSS   ARG2H, 7        ; ARG2H:ARG2L neg?
    BRA     SIGN_ARG1       ; no, check ARG1
    MOVF    ARG1L, W        ;
    SUBWF   RES2            ;
    MOVF    ARG1H, W        ;
    SUBWFB  RES3
;
SIGN_ARG1
    BTFSS   ARG1H, 7        ; ARG1H:ARG1L neg?
    BRA     CONT_CODE       ; no, done
    MOVF    ARG2L, W        ;
    SUBWF   RES2            ;
    MOVF    ARG2H, W        ;
    SUBWFB  RES3
;
CONT_CODE
   :
```


© 2008 Microchip Technology Inc.

10.0 INTERRUPTS

The PIC18F8722 family of devices have multiple interrupt sources and an interrupt priority feature that allows most interrupt sources to be assigned a high-priority level or a low-priority level. The high-priority interrupt vector is at 0008h and the low-priority interrupt vector is at 0018h. High-priority interrupt events will interrupt any low-priority interrupts that may be in progress.

There are ten registers which are used to control interrupt operation. These registers are:

- RCON
- INTCON
- INTCON2
- INTCON3
- PIR1, PIR2, PIR3
- PIE1, PIE2, PIE3
- IPR1, IPR2, IPR3

It is recommended that the Microchip header files supplied with MPLAB® IDE be used for the symbolic bit names in these registers. This allows the assembler/compiler to automatically take care of the placement of these bits within the specified register.

In general, interrupt sources have three bits to control their operation. They are:

- **Flag bit** to indicate that an interrupt event occurred
- **Enable bit** that allows program execution to branch to the interrupt vector address when the flag bit is set
- **Priority bit** to select high priority or low priority

The interrupt priority feature is enabled by setting the IPEN bit (RCON<7>). When interrupt priority is enabled, there are two bits which enable interrupts globally. Setting the GIEH bit (INTCON<7>) enables all interrupts that have the priority bit set (high priority). Setting the GIEL bit (INTCON<6>) enables all interrupts that have the priority bit cleared (low priority). When the interrupt flag, enable bit and appropriate global interrupt enable bit are set, the interrupt will vector immediately to address 0008h or 0018h, depending on the priority bit setting. Individual interrupts can be disabled through their corresponding enable bits.

When the IPEN bit is cleared (default state), the interrupt priority feature is disabled and interrupts are compatible with PIC® mid-range devices. In Compatibility mode, the interrupt priority bits for each source have no effect. INTCON<6> is the PEIE bit, which enables/disables all peripheral interrupt sources. INTCON<7> is the GIE bit, which enables/disables all interrupt sources. All interrupts branch to address 0008h in Compatibility mode.

When an interrupt is responded to, the global interrupt enable bit is cleared to disable further interrupts. If the IPEN bit is cleared, this is the GIE bit. If interrupt priority levels are used, this will be either the GIEH or GIEL bit. High-priority interrupt sources can interrupt a low-priority interrupt. Low-priority interrupts are not processed while high-priority interrupts are in progress.

The return address is pushed onto the stack and the PC is loaded with the interrupt vector address (0008h or 0018h). Once in the Interrupt Service Routine, the source(s) of the interrupt can be determined by polling the interrupt flag bits. The interrupt flag bits must be cleared in software before re-enabling interrupts to avoid recursive interrupts.

The “return from interrupt” instruction, `RETFIE`, exits the interrupt routine and sets the GIE bit (GIEH or GIEL if priority levels are used), which re-enables interrupts.

For external interrupt events, such as the INTx pins or the PORTB input change interrupt, the interrupt latency will be three to four instruction cycles. The exact latency is the same for one or two-cycle instructions. Individual interrupt flag bits are set, regardless of the status of their corresponding enable bit or the GIE bit.

Note:	Do not use the `MOVFF` instruction to modify any of the interrupt control registers while **any** interrupt is enabled. Doing so may cause erratic microcontroller behavior.

FIGURE 10-1: PIC18F8722 FAMILY INTERRUPT LOGIC

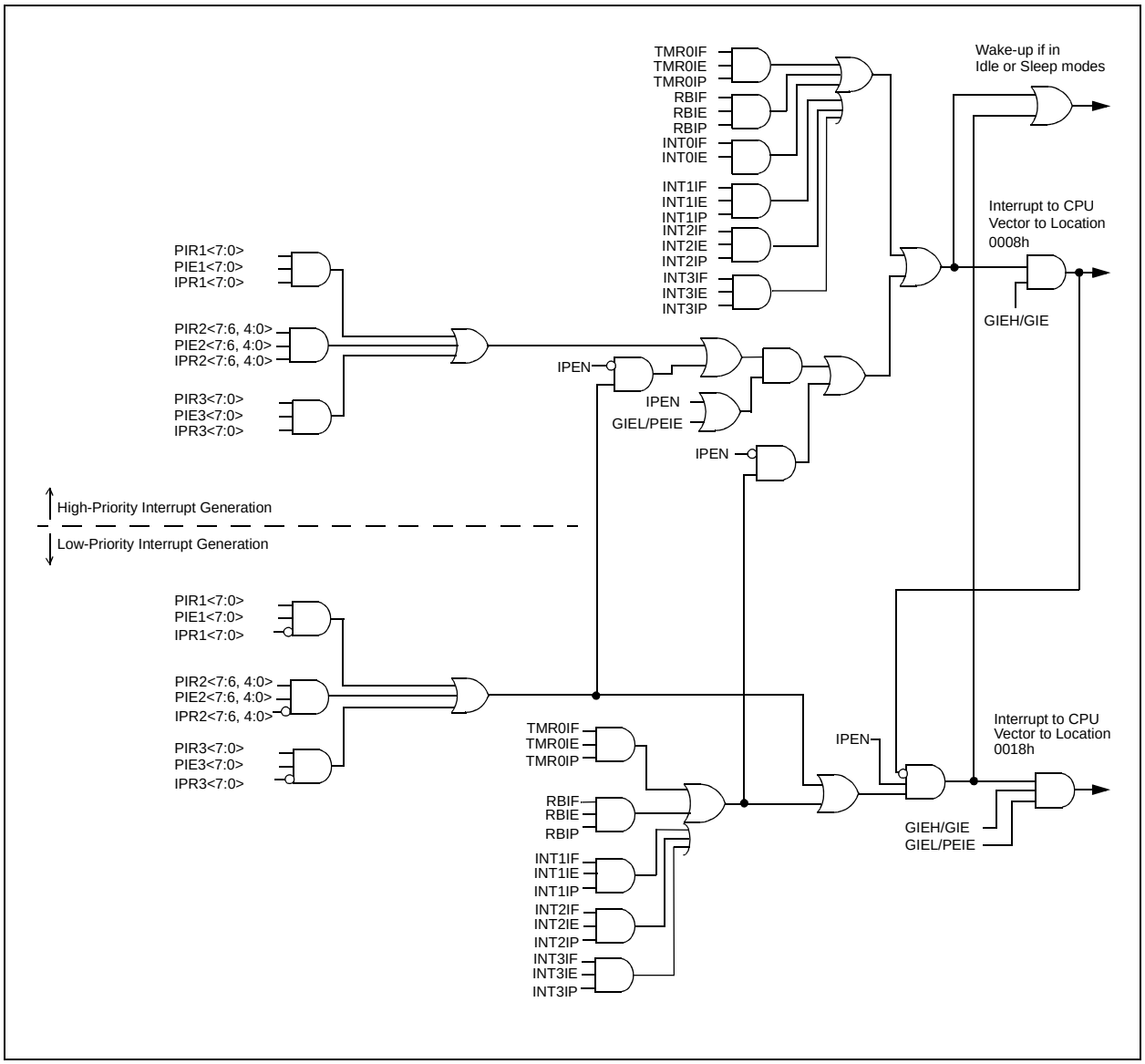

© 2008 Microchip Technology Inc.

10.1 INTCON Registers

The INTCON registers are readable and writable registers which contain various enable, priority and flag bits.

Note: Interrupt flag bits are set when an interrupt condition occurs, regardless of the state of its corresponding enable bit or the global interrupt enable bit. User software should ensure the appropriate interrupt flag bits are clear prior to enabling an interrupt. This feature allows for software polling.

REGISTER 10-1: INTCON: INTERRUPT CONTROL REGISTER

R/W-0	R/W-0	R/W-0	R/W-0	R/W-0	R/W-0	R/W-0	R/W-x
GIE/GIEH	PEIE/GIEL	TMR0IE	INT0IE	RBIE	TMR0IF	INT0IF	RBIF(1)
bit 7							bit 0

Legend:			
R = Readable bit	W = Writable bit	U = Unimplemented bit, read as ‘0’	
-n = Value at POR	‘1’ = Bit is set	‘0’ = Bit is cleared	x = Bit is unknown

bit 7 **GIE/GIEH:** Global Interrupt Enable bit
When IPEN = 0:
1 = Enables all unmasked interrupts
0 = Disables all interrupts
When IPEN = 1:
1 = Enables all high-priority interrupts
0 = Disables all interrupts

bit 6 **PEIE/GIEL:** Peripheral Interrupt Enable bit
When IPEN = 0:
1 = Enables all unmasked peripheral interrupts
0 = Disables all peripheral interrupts
When IPEN = 1:
1 = Enables all low-priority peripheral interrupts
0 = Disables all low-priority peripheral interrupts

bit 5 **TMR0IE:** TMR0 Overflow Interrupt Enable bit
1 = Enables the TMR0 overflow interrupt
0 = Disables the TMR0 overflow interrupt

bit 4 **INT0IE:** INT0 External Interrupt Enable bit
1 = Enables the INT0 external interrupt
0 = Disables the INT0 external interrupt

bit 3 **RBIE:** RB Port Change Interrupt Enable bit
1 = Enables the RB port change interrupt
0 = Disables the RB port change interrupt

bit 2 **TMR0IF:** TMR0 Overflow Interrupt Flag bit
1 = TMR0 register has overflowed (must be cleared in software)
0 = TMR0 register did not overflow

bit 1 **INT0IF:** INT0 External Interrupt Flag bit
1 = The INT0 external interrupt occurred (must be cleared in software)
0 = The INT0 external interrupt did not occur

bit 0 **RBIF:** RB Port Change Interrupt Flag bit(1)
1 = At least one of the RB7:RB4 pins changed state (must be cleared in software)
0 = None of the RB7:RB4 pins have changed state

Note 1: A mismatch condition will continue to set this bit. Reading PORTB will end the mismatch condition and allow the bit to be cleared.

REGISTER 10-2: INTCON2: INTERRUPT CONTROL REGISTER 2

R/W-1	R/W-1	R/W-1	R/W-1	R/W-1	R/W-1	R/W-1	R/W-1
$\overline{\text{RBPU}}$	INTEDG0	INTEDG1	INTEDG2	INTEDG3	TMR0IP	INT3IP	RBIP
bit 7							bit 0

Legend:			
R = Readable bit	W = Writable bit	U = Unimplemented bit, read as ‘0’	
-n = Value at POR	‘1’ = Bit is set	‘0’ = Bit is cleared	x = Bit is unknown

bit 7 **$\overline{\text{RBPU}}$:** PORTB Pull-up Enable bit
1 = All PORTB pull-ups are disabled
0 = PORTB pull-ups are enabled by individual port latch values

bit 6 **INTEDG0:** External Interrupt 0 Edge Select bit
1 = Interrupt on rising edge
0 = Interrupt on falling edge

bit 5 **INTEDG1:** External Interrupt 1 Edge Select bit
1 = Interrupt on rising edge
0 = Interrupt on falling edge

bit 4 **INTEDG2:** External Interrupt 2 Edge Select bit
1 = Interrupt on rising edge
0 = Interrupt on falling edge

bit 3 **INTEDG3:** External Interrupt 3 Edge Select bit
1 = Interrupt on rising edge
0 = Interrupt on falling edge

bit 2 **TMR0IP:** TMR0 Overflow Interrupt Priority bit
1 = High priority
0 = Low priority

bit 1 **INT3IP:** INT3 External Interrupt Priority bit
1 = High priority
0 = Low priority

bit 0 **RBIP:** RB Port Change Interrupt Priority bit
1 = High priority
0 = Low priority

Note: Interrupt flag bits are set when an interrupt condition occurs, regardless of the state of its corresponding enable bit or the global interrupt enable bit. User software should ensure the appropriate interrupt flag bits are clear prior to enabling an interrupt. This feature allows for software polling.

© 2008 Microchip Technology Inc.

REGISTER 10-3: INTCON3: INTERRUPT CONTROL REGISTER 3

R/W-1	R/W-1	R/W-0	R/W-0	R/W-0	R/W-0	R/W-0	R/W-0
INT2IP	INT1IP	INT3IE	INT2IE	INT1IE	INT3IF	INT2IF	INT1IF
bit 7							bit 0

Legend:			
R = Readable bit	W = Writable bit	U = Unimplemented bit, read as ‘0’	
-n = Value at POR	‘1’ = Bit is set	‘0’ = Bit is cleared	x = Bit is unknown

bit 7 **INT2IP:** INT2 External Interrupt Priority bit
1 = High priority
0 = Low priority

bit 6 **INT1IP:** INT1 External Interrupt Priority bit
1 = High priority
0 = Low priority

bit 5 **INT3IE:** INT3 External Interrupt Enable bit
1 = Enables the INT3 external interrupt
0 = Disables the INT3 external interrupt

bit 4 **INT2IE:** INT2 External Interrupt Enable bit
1 = Enables the INT2 external interrupt
0 = Disables the INT2 external interrupt

bit 3 **INT1IE:** INT1 External Interrupt Enable bit
1 = Enables the INT1 external interrupt
0 = Disables the INT1 external interrupt

bit 2 **INT3IF:** INT3 External Interrupt Flag bit
1 = The INT3 external interrupt occurred (must be cleared in software)
0 = The INT3 external interrupt did not occur

bit 1 **INT2IF:** INT2 External Interrupt Flag bit
1 = The INT2 external interrupt occurred (must be cleared in software)
0 = The INT2 external interrupt did not occur

bit 0 **INT1IF:** INT1 External Interrupt Flag bit
1 = The INT1 external interrupt occurred (must be cleared in software)
0 = The INT1 external interrupt did not occur

Note: Interrupt flag bits are set when an interrupt condition occurs, regardless of the state of its corresponding enable bit or the global interrupt enable bit. User software should ensure the appropriate interrupt flag bits are clear prior to enabling an interrupt. This feature allows for software polling.

10.2 PIR Registers

The PIR registers contain the individual flag bits for the peripheral interrupts. Due to the number of peripheral interrupt sources, there are three Peripheral Interrupt Request (Flag) registers (PIR1, PIR2, PIR3).

> **Note 1:** Interrupt flag bits are set when an interrupt condition occurs, regardless of the state of its corresponding enable bit or the Global Interrupt Enable bit, GIE (INTCON<7>).
>
> **2:** User software should ensure the appropriate interrupt flag bits are cleared prior to enabling an interrupt and after servicing that interrupt.

REGISTER 10-4: PIR1: PERIPHERAL INTERRUPT REQUEST (FLAG) REGISTER 1

R/W-0	R/W-0	R-0	R-0	R/W-0	R/W-0	R/W-0	R/W-0
PSPIF	ADIF	RC1IF	TX1IF	SSP1IF	CCP1IF	TMR2IF	TMR1IF
bit 7							bit 0

Legend:			
R = Readable bit	W = Writable bit	U = Unimplemented bit, read as ‘0’	
-n = Value at POR	‘1’ = Bit is set	‘0’ = Bit is cleared	x = Bit is unknown

bit 7 **PSPIF:** Parallel Slave Port Read/Write Interrupt Flag bit
1 = A read or a write operation has taken place (must be cleared in software)
0 = No read or write has occurred

bit 6 **ADIF:** A/D Converter Interrupt Flag bit
1 = An A/D conversion completed (must be cleared in software)
0 = The A/D conversion is not complete

bit 5 **RC1IF:** EUSART1 Receive Interrupt Flag bit
1 = The EUSART1 receive buffer, RCREG1, is full (cleared when RCREG1 is read)
0 = The EUSART1 receive buffer is empty

bit 4 **TX1IF:** EUSART1 Transmit Interrupt Flag bit
1 = The EUSART1 transmit buffer, TXREG1, is empty (cleared when TXREG1 is written)
0 = The EUSART1 transmit buffer is full

bit 3 **SSP1IF:** MSSP1 Interrupt Flag bit
1 = The transmission/reception is complete (must be cleared in software)
0 = Waiting to transmit/receive

bit 2 **CCP1IF:** ECCP1 Interrupt Flag bit
Capture mode:
1 = A TMR1/TMR3 register capture occurred (must be cleared in software)
0 = No TMR1/TMR3 register capture occurred
Compare mode:
1 = A TMR1/TMR3 register compare match occurred (must be cleared in software)
0 = No TMR1/TMR3 register compare match occurred
PWM mode:
Unused in this mode.

bit 1 **TMR2IF:** TMR2 to PR2 Match Interrupt Flag bit
1 = TMR2 to PR2 match occurred (must be cleared in software)
0 = No TMR2 to PR2 match occurred

bit 0 **TMR1IF:** TMR1 Overflow Interrupt Flag bit
1 = TMR1 register overflowed (must be cleared in software)
0 = TMR1 register did not overflow

© 2008 Microchip Technology Inc.

REGISTER 10-5: PIR2: PERIPHERAL INTERRUPT REQUEST (FLAG) REGISTER 2

R/W-0	R/W-0	U-0	R/W-0	R/W-0	R/W-0	R/W-0	R/W-0
OSCFIF	CMIF	—	EEIF	BCL1IF	HLVDIF	TMR3IF	CCP2IF
bit 7							bit 0

Legend:			
R = Readable bit	W = Writable bit	U = Unimplemented bit, read as ‘0’	
-n = Value at POR	‘1’ = Bit is set	‘0’ = Bit is cleared	x = Bit is unknown

bit 7 **OSCFIF:** Oscillator Fail Interrupt Flag bit
1 = Device oscillator failed, clock input has changed to INTOSC (must be cleared in software)
0 = Device clock operating

bit 6 **CMIF:** Comparator Interrupt Flag bit
1 = Comparator input has changed (must be cleared in software)
0 = Comparator input has not changed

bit 5 **Unimplemented:** Read as ‘0’

bit 4 **EEIF:** EEPROM or Flash Write Operation Interrupt Flag bit
1 = The write operation is complete (must be cleared in software)
0 = The write operation is not complete or has not been started

bit 3 **BCL1IF:** MSSP1 Bus Collision Interrupt Flag bit
1 = A bus collision occurred while the MSSP1 module configured in I^2C™ Master mode was transmitting (must be cleared in software)
0 = No bus collision occurred

bit 2 **HLVDIF:** High/Low-Voltage Detect Interrupt Flag bit
1 = A low-voltage condition occurred (must be cleared in software)
0 = The device voltage is above the Low-Voltage Detect trip point

bit 1 **TMR3IF:** TMR3 Overflow Interrupt Flag bit
1 = TMR3 register overflowed (must be cleared in software)
0 = TMR3 register did not overflow

bit 0 **CCP2IF:** ECCP2 Interrupt Flag bit
Capture mode:
1 = A TMR1/TMR3 register capture occurred (must be cleared in software)
0 = No TMR1/TMR3 register capture occurred
Compare mode:
1 = A TMR1/TMR3 register compare match occurred (must be cleared in software)
0 = No TMR1/TMR3 register compare match occurred
PWM mode:
Unused in this mode.

REGISTER 10-6: PIR3: PERIPHERAL INTERRUPT REQUEST (FLAG) REGISTER 3

R/W-0	R/W-0	R-0	R-0	R/W-0	R/W-0	R/W-0	R/W-0
SSP2IF	BCL2IF	RC2IF	TX2IF	TMR4IF	CCP5IF	CCP4IF	CCP3IF
bit 7							bit 0

Legend:			
R = Readable bit	W = Writable bit	U = Unimplemented bit, read as ‘0’	
-n = Value at POR	‘1’ = Bit is set	‘0’ = Bit is cleared	x = Bit is unknown

bit 7 **SSP2IF:** MSSP2 Interrupt Flag bit
1 = The transmission/reception is complete (must be cleared in software)
0 = Waiting to transmit/receive

bit 6 **BCL2IF:** MSSP2 Bus Collision Interrupt Flag bit
1 = A bus collision has occurred while the MSSP2 module configured in I^2C™ master was transmitting (must be cleared in software)
0 = No bus collision occurred

bit 5 **RC2IF:** EUSART2 Receive Interrupt Flag bit
1 = The EUSART2 receive buffer, RCREG2, is full (cleared when RCREG2 is read)
0 = The EUSART2 receive buffer is empty

bit 4 **TX2IF:** EUSART2 Transmit Interrupt Flag bit
1 = The EUSART2 transmit buffer, TXREG2, is empty (cleared when TXREG2 is written)
0 = The EUSART2 transmit buffer is full

bit 3 **TMR4IF:** TMR4 to PR4 Match Interrupt Flag bit
1 = TMR4 to PR4 match occurred (must be cleared in software)
0 = No TMR4 to PR4 match occurred

bit 2 **CCP5IF:** CCP5 Interrupt Flag bit
Capture mode:
1 = A TMR register capture occurred (must be cleared in software)
0 = No TMR register capture occurred
Compare mode:
1 = A TMR register compare match occurred (must be cleared in software)
0 = No TMR register compare match occurred
PWM Mode:

bit 1 **CCP4IF:** CCP4 Interrupt Flag bit
Capture mode:
1 = A TMR register capture occurred (must be cleared in software)
0 = No TMR register capture occurred
Compare mode:
1 = A TMR register compare match occurred (must be cleared in software)
0 = No TMR register compare match occurred
PWM mode:
Not used in PWM mode.

bit 0 **CCP3IF:** ECCP3 Interrupt Flag bit
Capture mode:
1 = A TMR register capture occurred (must be cleared in software)
0 = No TMR register capture occurred
Compare mode:
1 = A TMR register compare match occurred (must be cleared in software)
0 = No TMR register compare match occurred
PWM mode:
Not used in PWM mode.

© 2008 Microchip Technology Inc.

10.3 PIE Registers

The PIE registers contain the individual enable bits for the peripheral interrupts. Due to the number of peripheral interrupt sources, there are three Peripheral Interrupt Enable registers (PIE1, PIE2, PIE3). When IPEN = 0, the PEIE bit must be set to enable any of these peripheral interrupts.

REGISTER 10-7: PIE1: PERIPHERAL INTERRUPT ENABLE REGISTER 1

R/W-0	R/W-0	R/W-0	R/W-0	R/W-0	R/W-0	R/W-0	R/W-0
PSPIE	ADIE	RC1IE	TX1IE	SSP1IE	CCP1IE	TMR2IE	TMR1IE
bit 7							bit 0

Legend:			
R = Readable bit	W = Writable bit	U = Unimplemented bit, read as ‘0’	
-n = Value at POR	‘1’ = Bit is set	‘0’ = Bit is cleared	x = Bit is unknown

bit 7 **PSPIE:** Parallel Slave Port Read/Write Interrupt Enable bit
1 = Enables the PSP read/write interrupt
0 = Disables the PSP read/write interrupt

bit 6 **ADIE:** A/D Converter Interrupt Enable bit
1 = Enables the A/D interrupt
0 = Disables the A/D interrupt

bit 5 **RC1IE:** EUSART1 Receive Interrupt Enable bit
1 = Enables the EUSART1 receive interrupt
0 = Disables the EUSART1 receive interrupt

bit 4 **TX1IE:** EUSART1 Transmit Interrupt Enable bit
1 = Enables the EUSART1 transmit interrupt
0 = Disables the EUSART1 transmit interrupt

bit 3 **SSP1IE:** MSSP1 Interrupt Enable bit
1 = Enables the MSSP1 interrupt
0 = Disables the MSSP1 interrupt

bit 2 **CCP1IE:** ECCP1 Interrupt Enable bit
1 = Enables the ECCP1 interrupt
0 = Disables the ECCP1 interrupt

bit 1 **TMR2IE:** TMR2 to PR2 Match Interrupt Enable bit
1 = Enables the TMR2 to PR2 match interrupt
0 = Disables the TMR2 to PR2 match interrupt

bit 0 **TMR1IE:** TMR1 Overflow Interrupt Enable bit
1 = Enables the TMR1 overflow interrupt
0 = Disables the TMR1 overflow interrupt

REGISTER 10-8: PIE2: PERIPHERAL INTERRUPT ENABLE REGISTER 2

R/W-0	R/W-0	U-0	R/W-0	R/W-0	R/W-0	R/W-0	R/W-0
OSCFIE	CMIE	—	EEIE	BCL1IE	HLVDIE	TMR3IE	CCP2IE
bit 7							bit 0

Legend:			
R = Readable bit	W = Writable bit	U = Unimplemented bit, read as ‘0’	
-n = Value at POR	‘1’ = Bit is set	‘0’ = Bit is cleared	x = Bit is unknown

bit 7 **OSCFIE:** Oscillator Fail Interrupt Enable bit
1 = Enabled
0 = Disabled

bit 6 **CMIE:** Comparator Interrupt Enable bit
1 = Enabled
0 = Disabled

bit 5 **Unimplemented:** Read as ‘0’

bit 4 **EEIE:** Interrupt Enable bit
1 = Enabled
0 = Disabled

bit 3 **BCL1IE:** MSSP1 Bus Collision Interrupt Enable bit
1 = Enabled
0 = Disabled

bit 2 **HLVDIE:** High/Low-Voltage Detect Interrupt Enable bit
1 = Enabled
0 = Disabled

bit 1 **TMR3IE:** TMR3 Overflow Interrupt Enable bit
1 = Enabled
0 = Disabled

bit 0 **CCP2IE:** ECCP2 Interrupt Enable bit
1 = Enabled
0 = Disabled

© 2008 Microchip Technology Inc.

REGISTER 10-9: PIE3: PERIPHERAL INTERRUPT ENABLE REGISTER 3

R/W-0	R/W-0	R-0	R-0	R/W-0	R/W-0	R/W-0	R/W-0
SSP2IE	BCL2IE	RC2IE	TX2IE	TMR4IE	CCP5IE	CCP4IE	CCP3IE
bit 7							bit 0

Legend:			
R = Readable bit	W = Writable bit	U = Unimplemented bit, read as ‘0’	
-n = Value at POR	‘1’ = Bit is set	‘0’ = Bit is cleared	x = Bit is unknown

bit 7 **SSP2IE:** MSSP2 Interrupt Enable bit
1 = Enables the MSSP2 interrupt
0 = Disables the MSSP2 interrupt

bit 6 **BCL2IE:** MSSP2 Bus Collision Interrupt Enable bit
1 = Enabled
0 = Disabled

bit 5 **RC2IE:** EUSART2 Receive Interrupt Enable bit
1 = Enabled
0 = Disabled

bit 4 **TX2IE:** EUSART2 Transmit Interrupt Enable bit
1 = Enabled
0 = Disabled

bit 3 **TMR4IE:** TMR4 to PR4 Match Interrupt Enable bit
1 = Enabled
0 = Disabled

bit 2 **CCP5IE:** CCP5 Interrupt Enable bit
1 = Enabled
0 = Disabled

bit 1 **CCP4IE:** CCP4 Interrupt Enable bit
1 = Enabled
0 = Disabled

bit 0 **CCP3IE:** ECCP3 Interrupt Enable bit
1 = Enabled
0 = Disabled

10.4 IPR Registers

The IPR registers contain the individual priority bits for the peripheral interrupts. Due to the number of peripheral interrupt sources, there are three Peripheral Interrupt Priority registers (IPR1, IPR2, IPR3). Using the priority bits requires that the Interrupt Priority Enable (IPEN) bit be set.

REGISTER 10-10: IPR1: PERIPHERAL INTERRUPT PRIORITY REGISTER 1

R/W-1	R/W-1	R/W-1	R/W-1	R/W-1	R/W-1	R/W-1	R/W-1
PSPIP	ADIP	RC1IP	TX1IP	SSP1IP	CCP1IP	TMR2IP	TMR1IP
bit 7							bit 0

Legend:			
R = Readable bit	W = Writable bit	U = Unimplemented bit, read as ‘0’	
-n = Value at POR	‘1’ = Bit is set	‘0’ = Bit is cleared	x = Bit is unknown

bit 7 **PSPIP:** Parallel Slave Port Read/Write Interrupt Priority bit
1 = High priority
0 = Low priority

bit 6 **ADIP:** A/D Converter Interrupt Priority bit
1 = High priority
0 = Low priority

bit 5 **RC1IP:** EUSART1 Receive Interrupt Priority bit
1 = High priority
0 = Low priority

bit 4 **TX1IP:** EUSART1 Transmit Interrupt Priority bit
1 = High priority
0 = Low priority

bit 3 **SSP1IP:** MSSP1 Interrupt Priority bit
1 = High priority
0 = Low priority

bit 2 **CCP1IP:** ECCP1 Interrupt Priority bit
1 = High priority
0 = Low priority

bit 1 **TMR2IP:** TMR2 to PR2 Match Interrupt Priority bit
1 = High priority
0 = Low priority

bit 0 **TMR1IP:** TMR1 Overflow Interrupt Priority bit
1 = High priority
0 = Low priority

© 2008 Microchip Technology Inc.

REGISTER 10-11: IPR2: PERIPHERAL INTERRUPT PRIORITY REGISTER 2

R/W-1	R/W-1	U-0	R/W-1	R/W-1	R/W-1	R/W-1	R/W-1
OSCFIP	CMIP	—	EEIP	BCL1IP	HLVDIP	TMR3IP	CCP2IP
bit 7							bit 0

Legend:			
R = Readable bit	W = Writable bit	U = Unimplemented bit, read as ‘0’	
-n = Value at POR	‘1’ = Bit is set	‘0’ = Bit is cleared	x = Bit is unknown

bit 7 **OSCFIP:** Oscillator Fail Interrupt Priority bit
1 = High priority
0 = Low priority

bit 6 **CMIP:** Comparator Interrupt Priority bit
1 = High priority
0 = Low priority

bit 5 **Unimplemented:** Read as ‘0’

bit 4 **EEIP:** Interrupt Priority bit
1 = High priority
0 = Low priority

bit 3 **BCL1IP:** MSSP1 Bus Collision Interrupt Priority bit
1 = High priority
0 = Low priority

bit 2 **HLVDIP:** High/Low-Voltage Detect Interrupt Priority bit
1 = High priority
0 = Low priority

bit 1 **TMR3IP:** TMR3 Overflow Interrupt Priority bit
1 = High priority
0 = Low priority

bit 0 **CCP2IP:** ECCP2 Interrupt Priority bit
1 = High priority
0 = Low priority

REGISTER 10-12: IPR3: PERIPHERAL INTERRUPT PRIORITY REGISTER 3

R/W-0	R/W-0	R/W-1	R/W-1	R/W-1	R/W-1	R/W-1	R/W-1
SSP2IP	BCL2IP	RC2IP	TX2IP	TMR4IP	CCP5IP	CCP4IP	CCP3IP
bit 7							bit 0

Legend:			
R = Readable bit	W = Writable bit	U = Unimplemented bit, read as ‘0’	
-n = Value at POR	‘1’ = Bit is set	‘0’ = Bit is cleared	x = Bit is unknown

bit 7 **SSP2IP:** MSSP2 Interrupt Priority bit
1 = High priority
0 = Low priority

bit 6 **BCL2IP:** MSSP2 Bus Collision Interrupt Priority bit
1 = High priority
0 = Low priority

bit 5 **RC2IP:** EUSART2 Receive Interrupt Priority bit
1 = High priority
0 = Low priority

bit 4 **TX2IP:** EUSART2 Transmit Interrupt Priority bit
1 = High priority
0 = Low priority

bit 3 **TMR4IP:** TMR4 to PR4 Match Interrupt Priority bit
1 = High priority
0 = Low priority

bit 2 **CCP5IP:** CCP5 Interrupt Priority bit
1 = High priority
0 = Low priority

bit 1 **CCP4IP:** CCP4 Interrupt Priority bit
1 = High priority
0 = Low priority

bit 0 **CCP3IP:** ECCP3 Interrupt Priority bit
1 = High priority
0 = Low priority

© 2008 Microchip Technology Inc.

10.5 RCON Register

The RCON register contains bits used to determine the cause of the last Reset or wake-up from Idle or Sleep modes. RCON also contains the bit that enables interrupt priorities (IPEN).

REGISTER 10-13: RCON: RESET CONTROL REGISTER

R/W-0	R/W-1	U-0	R/W-1	R-1	R-1	R/W-0	R/W-0
IPEN	SBOREN	—	$\overline{\text{RI}}$	$\overline{\text{TO}}$	$\overline{\text{PD}}$	$\overline{\text{POR}}$	$\overline{\text{BOR}}$
bit 7							bit 0

Legend:			
R = Readable bit	W = Writable bit	U = Unimplemented bit, read as ‘0’	
-n = Value at POR	‘1’ = Bit is set	‘0’ = Bit is cleared	x = Bit is unknown

bit 7 **IPEN:** Interrupt Priority Enable bit
`1` = Enable priority levels on interrupts
`0` = Disable priority levels on interrupts (PIC16CXXX Compatibility mode)

bit 6 **SBOREN:** Software BOR Enable bit
For details of bit operation and Reset state, see Register 4-1.

bit 5 **Unimplemented:** Read as ‘`0`’

bit 4 **$\overline{\text{RI}}$:** RESET Instruction Flag bit
For details of bit operation, see Register 4-1.

bit 3 **$\overline{\text{TO}}$:** Watchdog Timer Time-out Flag bit
For details of bit operation, see Register 4-1.

bit 2 **$\overline{\text{PD}}$:** Power-Down Detection Flag bit
For details of bit operation, see Register 4-1.

bit 1 **$\overline{\text{POR}}$:** Power-on Reset Status bit
For details of bit operation, see Register 4-1.

bit 0 **$\overline{\text{BOR}}$:** Brown-out Reset Status bit
For details of bit operation, see Register 4-1.

10.6 INTx Pin Interrupts

External interrupts on the RB0/INT0, RB1/INT1, RB2/INT2 and RB3/INT3 pins are edge-triggered. If the corresponding INTEDGx bit in the INTCON2 register is set (= 1), the interrupt is triggered by a rising edge; if the bit is clear, the trigger is on the falling edge. When a valid edge appears on the RBx/INTx pin, the corresponding flag bit, INTxIF, is set. This interrupt can be disabled by clearing the corresponding enable bit, INTxIE. Flag bit, INTxIF, must be cleared in software in the Interrupt Service Routine before re-enabling the interrupt.

All external interrupts (INT0, INT1, INT2 and INT3) can wake-up the processor from the power-managed modes if bit INTxIE was set prior to going into power-managed modes. If the Global Interrupt Enable bit, GIE, is set, the processor will branch to the interrupt vector following wake-up.

Interrupt priority for INT1, INT2 and INT3 is determined by the value contained in the interrupt priority bits, INT1IP (INTCON3<6>), INT2IP (INTCON3<7>) and INT3IP (INTCON2<1>). There is no priority bit associated with INT0. It is always a high-priority interrupt source.

10.7 TMR0 Interrupt

In 8-bit mode (which is the default), an overflow in the TMR0 register (FFh → 00h) will set flag bit, TMR0IF. In 16-bit mode, an overflow in the TMR0H:TMR0L register pair (FFFFh → 0000h) will set TMR0IF. The interrupt can be enabled/disabled by setting/clearing enable bit, TMR0IE (INTCON<5>). Interrupt priority for Timer0 is determined by the value contained in the interrupt priority bit, TMR0IP (INTCON2<2>). See **Section 12.0 "Timer0 Module"** for further details on the Timer0 module.

10.8 PORTB Interrupt-on-Change

An input change on PORTB<7:4> sets flag bit, RBIF (INTCON<0>). The interrupt can be enabled/disabled by setting/clearing enable bit, RBIE (INTCON<3>). Interrupt priority for PORTB interrupt-on-change is determined by the value contained in the interrupt priority bit, RBIP (INTCON2<0>).

10.9 Context Saving During Interrupts

During interrupts, the return PC address is saved on the stack. Additionally, the WREG, STATUS and BSR registers are saved on the fast return stack. If a fast return from interrupt is not used (see **Section 5.3 "Data Memory Organization"**), the user may need to save the WREG, STATUS and BSR registers on entry to the Interrupt Service Routine. Depending on the user's application, other registers may also need to be saved. Example 10-1 saves and restores the WREG, STATUS and BSR registers during an Interrupt Service Routine.

EXAMPLE 10-1: SAVING STATUS, WREG AND BSR REGISTERS IN RAM

```
MOVWF   W_TEMP                      ; W_TEMP is in virtual bank
MOVFF   STATUS, STATUS_TEMP         ; STATUS_TEMP located anywhere
MOVFF   BSR, BSR_TEMP               ; BSR_TMEP located anywhere
;
; USER ISR CODE
;
MOVFF   BSR_TEMP, BSR               ; Restore BSR
MOVF    W_TEMP, W                   ; Restore WREG
MOVFF   STATUS_TEMP, STATUS         ; Restore STATUS
```


© 2008 Microchip Technology Inc.

11.0 I/O PORTS

Depending on the device selected and features enabled, there are up to nine ports available. Some pins of the I/O ports are multiplexed with an alternate function from the peripheral features on the device. In general, when a peripheral is enabled, that pin may not be used as a general purpose I/O pin.

Each port has three registers for its operation. These registers are:

- TRIS register (Data Direction register)
- Port register (reads the levels on the pins of the device)
- LAT register (output latch)

The Data Latch (LAT register) is useful for read-modify-write operations on the value that the I/O pins are driving.

A simplified model of a generic I/O port, without the interfaces to other peripherals, is shown in Figure 11-1.

FIGURE 11-1: GENERIC I/O PORT OPERATION

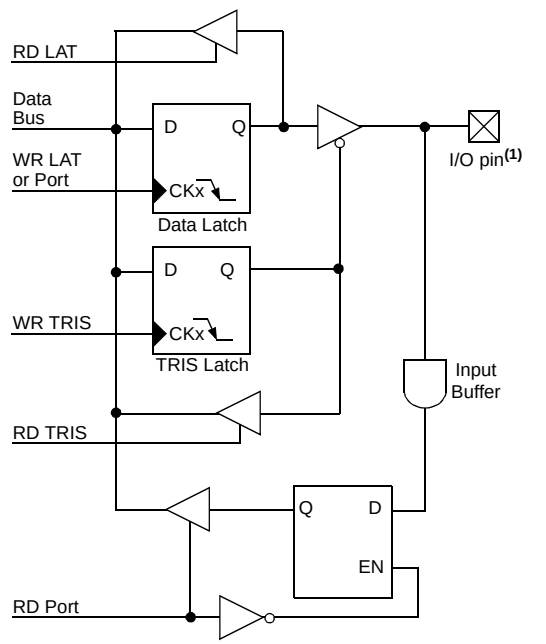

Note 1: I/O pins have diode protection to VDD and VSS.

11.1 PORTA, TRISA and LATA Registers

PORTA is an 8-bit wide, bidirectional port. The corresponding data direction register is TRISA. Setting a TRISA bit (= 1) will make the corresponding PORTA pin an input (i.e., put the corresponding output driver in a high-impedance mode). Clearing a TRISA bit (= 0) will make the corresponding PORTA pin an output (i.e., put the contents of the output latch on the selected pin).

Reading the PORTA register reads the status of the pins, whereas writing to it, will write to the port latch.

The Data Latch register (LATA) is also memory mapped. Read-modify-write operations on the LATA register read and write the latched output value for PORTA.

The RA4 pin is multiplexed with the Timer0 module clock input to become the RA4/T0CKI pin. Pins RA6 and RA7 are multiplexed with the main oscillator pins; they are enabled as oscillator or I/O pins by the selection of the main oscillator in the Configuration register (see **Section 25.1 "Configuration Bits"** for details). When they are not used as port pins, RA6 and RA7 and their associated TRIS and LAT bits are read as '0'.

The other PORTA pins are multiplexed with the analog VREF+ and VREF- inputs. The operation of pins RA5:RA0 as A/D converter inputs is selected by clearing or setting the PCFG<3:0> control bits in the ADCON1 register.

Note:	On a Power-on Reset, RA5 and RA<3:0> are configured as analog inputs and read as '0'. RA4 is configured as a digital input.

The RA4/T0CKI pin is a Schmitt Trigger input and an open-drain output. All other PORTA pins have TTL input levels and full CMOS output drivers.

The TRISA register controls the direction of the PORTA pins, even when they are being used as analog inputs. The user must ensure the bits in the TRISA register are maintained set when using them as analog inputs.

EXAMPLE 11-1: INITIALIZING PORTA

```
CLRF    PORTA   ; Initialize PORTA by
                ; clearing output
                ; data latches
CLRF    LATA    ; Alternate method
                ; to clear output
                ; data latches
MOVLW   0Fh     ; Configure A/D
MOVWF   ADCON1  ; for digital inputs
MOVLW   0CFh    ; Value used to
                ; initialize data
                ; direction
MOVWF   TRISA   ; Set RA<3:0> as inputs
                ; RA<5:4> as outputs
```

TABLE 11-1: PORTA FUNCTIONS

Pin Name	Function	TRIS Setting	I/O	I/O Type	Description
RA0/AN0	RA0	0	O	DIG	LATA<0> data output; not affected by analog input.
		1	I	TTL	PORTA<0> data input; disabled when analog input enabled.
	AN0	1	I	ANA	A/D input channel 0. Default input configuration on POR; does not affect digital output.
RA1/AN1	RA1	0	O	DIG	LATA<1> data output; not affected by analog input.
		1	I	TTL	PORTA<1> data input; disabled when analog input enabled.
	AN1	1	I	ANA	A/D input channel 1. Default input configuration on POR; does not affect digital output.
RA2/AN2/VREF-	RA2	0	O	DIG	LATA<2> data output; not affected by analog input.
		1	I	TTL	PORTA<2> data input. Disabled when analog functions enabled.
	AN2	1	I	ANA	A/D input channel 2. Default input configuration on POR.
	VREF-	1	I	ANA	Comparator voltage reference low input and A/D voltage reference low input.
RA3/AN3/VREF+	RA3	0	O	DIG	LATA<3> data output; not affected by analog input.
		1	I	TTL	PORTA<3> data input; disabled when analog input enabled.
	AN3	1	I	ANA	A/D input channel 3. Default input configuration on POR.
	VREF+	1	I	ANA	Comparator voltage reference high input and A/D voltage reference high input.
RA4/T0CKI	RA4	0	O	DIG	LATA<4> data output.
		1	I	ST	PORTA<4> data input; default configuration on POR.
	T0CKI	x	I	ST	Timer0 clock input.
RA5/AN4/HLVDIN	RA5	0	O	DIG	LATA<5> data output; not affected by analog input.
		1	I	TTL	PORTA<5> data input; disabled when analog input enabled.
	AN4	1	I	ANA	A/D input channel 4. Default configuration on POR.
	HLVDIN	1	I	ANA	High/Low-Voltage Detect external trip point input.
OSC2/CLKO/RA6	OSC2	x	O	ANA	Main oscillator feedback output connection (XT, HS, HSPLL and LP modes).
	CLKO	x	O	DIG	System cycle clock output (FOSC/4) in all oscillator modes except RC, INTIO7 and EC.
	RA6	0	O	DIG	LATA<6> data output. Enabled in RCIO, INTIO2 and ECIO modes only.
		1	I	TTL	PORTA<6> data input. Enabled in RCIO, INTIO2 and ECIO modes only.
OSC1/CLKI/RA7	OSC1	x	I	ANA	Main oscillator input connection.
	CLKI	x	I	ANA	Main clock input connection.
	RA7	0	O	DIG	LATA<7> data output. Disabled in external oscillator modes.
		1	I	TTL	PORTA<7> data input. Disabled in external oscillator modes.

Legend: PWR = Power Supply, O = Output, I = Input, ANA = Analog Signal, DIG = Digital Output, ST= Schmitt Buffer Input, TTL = TTL Buffer Input, x = Don't care (TRIS bit does not affect port direction or is overridden for this option).

TABLE 11-2: SUMMARY OF REGISTERS ASSOCIATED WITH PORTA

Name	Bit 7	Bit 6	Bit 5	Bit 4	Bit 3	Bit 2	Bit 1	Bit 0	Reset Values on page
PORTA	RA7(1)	RA6(1)	RA5	RA4	RA3	RA2	RA1	RA0	61
LATA	LATA7(1)	LATA6(1)	LATA5	LATA4	LATA3	LATA2	LATA1	LATA0	60
TRISA	TRISA7(1)	TRISA6(1)	TRISA5	TRISA4	TRISA3	TRISA2	TRISA1	TRISA0	60
ADCON1	—	—	VCFG1	VCFG0	PCFG3	PCFG2	PCFG1	PCFG0	59

Legend: — = unimplemented, read as '0'. Shaded cells are not used by PORTA.

Note 1: RA<7:6> and their associated latch and data direction bits are enabled as I/O pins based on oscillator configuration; otherwise, they are read as '0'.

© 2008 Microchip Technology Inc.

11.2 PORTB, TRISB and LATB Registers

PORTB is an 8-bit wide, bidirectional port. The corresponding Data Direction register is TRISB. Setting a TRISB bit (= 1) will make the corresponding PORTB pin an input (i.e., put the corresponding output driver in a high-impedance mode). Clearing a TRISB bit (= 0) will make the corresponding PORTB pin an output (i.e., put the contents of the output latch on the selected pin).

The Data Latch register (LATB) is also memory mapped. Read-modify-write operations on the LATB register read and write the latched output value for PORTB.

EXAMPLE 11-2: INITIALIZING PORTB

```
CLRF    PORTB   ; Initialize PORTB by
                ; clearing output
                ; data latches
CLRF    LATB    ; Alternate method
                ; to clear output
                ; data latches
MOVLW   0CFh    ; Value used to
                ; initialize data
                ; direction
MOVWF   TRISB   ; Set RB<3:0> as inputs
                ; RB<5:4> as outputs
                ; RB<7:6> as inputs
```

Each of the PORTB pins has a weak internal pull-up. A single control bit can turn on all the pull-ups. This is performed by clearing bit $\overline{\text{RBPU}}$ (INTCON2<7>). The weak pull-up is automatically turned off when the port pin is configured as an output. The pull-ups are disabled on a Power-on Reset.

Four of the PORTB pins (RB<7:4>) have an interrupt-on-change feature. Only pins configured as inputs can cause this interrupt to occur (i.e., any RB7:RB4 pin configured as an output is excluded from the interrupt-on-change comparison). The input pins (of RB7:RB4) are compared with the old value latched on the last read of PORTB. The “mismatch” outputs of RB7:RB4 are ORed together to generate the RB Port Change Interrupt with Flag bit, RBIF (INTCON<0>).

This interrupt can wake the device from power-managed modes. The user, in the Interrupt Service Routine, can clear the interrupt in the following manner:

a) Any read or write of PORTB (except with the MOVSF, MOVSS, MOVFF (ANY), PORTB instruction). This will end the mismatch condition.
b) Clear flag bit, RBIF.

A mismatch condition will continue to set flag bit, RBIF. Reading PORTB will end the mismatch condition and allow flag bit, RBIF, to be cleared.

The interrupt-on-change feature is recommended for wake-up on key depression operation and operations where PORTB is only used for the interrupt-on-change feature. Polling of PORTB is not recommended while using the interrupt-on-change feature.

For 80-pin devices, RB3 can be configured as the alternate peripheral pin for the ECCP2 module by clearing the CCP2MX Configuration bit. This applies only when the device is in one of the operating modes other than the default Microcontroller mode. If the device is in Microcontroller mode, the alternate assignment for ECCP2 is RE7. As with other ECCP2 configurations, the user must ensure that the TRISB<3> bit is set appropriately for the intended operation.

TABLE 11-3: PORTB FUNCTIONS

Pin Name	Function	TRIS Setting	I/O	I/O Type	Description
RB0/INT0/FLT0	RB0	0	O	DIG	LATB<0> data output.
		1	I	TTL	PORTB<0> data input; weak pull-up when $\overline{\text{RBPU}}$ bit is cleared.
	INT0	1	I	ST	External interrupt 0 input.
	FLT0	1	I	ST	ECCPx PWM Fault input, enabled in software.
RB1/INT1	RB1	0	O	DIG	LATB<1> data output.
		1	I	TTL	PORTB<1> data input; weak pull-up when $\overline{\text{RBPU}}$ bit is cleared.
	INT1	1	I	ST	External interrupt 1 input.
RB2/INT2	RB2	0	O	DIG	LATB<2> data output.
		1	I	TTL	PORTB<2> data input; weak pull-up when $\overline{\text{RBPU}}$ bit is cleared.
	INT2	1	I	ST	External interrupt 2 input.
RB3/INT3/ ECCP2/P2A	RB3	0	O	DIG	LATB<3> data output.
		1	I	TTL	PORTB<3> data input; weak pull-up when $\overline{\text{RBPU}}$ bit is cleared and capture input is disabled.
	INT3	1	I	ST	External interrupt 3 input.
	ECCP2(1)	0	O	DIG	ECCP2 compare output and ECCP2 PWM output. Takes priority over port data.
		1	I	ST	ECCP2 capture input.
	P2A(1)	0	O	DIG	ECCP2 Enhanced PWM output, channel A. May be configured for tri-state during Enhanced PWM shutdown events. Takes priority over port data.
RB4/KBI0	RB4	0	O	DIG	LATB<4> data output.
		1	I	TTL	PORTB<4> data input; weak pull-up when $\overline{\text{RBPU}}$ bit is cleared.
	KBI0	1	I	TTL	Interrupt-on-pin change.
RB5/KBI1/PGM	RB5	0	O	DIG	LATB<5> data output
		1	I	TTL	PORTB<5> data input; weak pull-up when $\overline{\text{RBPU}}$ bit is cleared.
	KBI1	1	I	TTL	Interrupt-on-pin change.
	PGM	x	I	ST	Single-Supply Programming mode entry (ICSP). Enabled by LVP Configuration bit; all other pin functions disabled.
RB6/KBI2/PGC	RB6	0	O	DIG	LATB<6> data output.
		1	I	TTL	PORTB<6> data input; weak pull-up when $\overline{\text{RBPU}}$ bit is cleared.
	KBI2	1	I	TTL	Interrupt-on-pin change.
	PGC	x	I	ST	Serial execution (ICSP™) clock input for ICSP and ICD operation(2).
RB7/KBI3/PGD	RB7	0	O	DIG	LATB<7> data output.
		1	I	TTL	PORTB<7> data input; weak pull-up when $\overline{\text{RBPU}}$ bit is cleared.
	KBI3	1	I	TTL	Interrupt-on-pin change.
	PGD	x	O	DIG	Serial execution data output for ICSP and ICD operation(2).
		x	I	ST	Serial execution data input for ICSP and ICD operation(2).

Legend: PWR = Power Supply, O = Output, I = Input, ANA = Analog Signal, DIG = Digital Output, ST = Schmitt Buffer Input, TTL = TTL Buffer Input, x = Don't care (TRIS bit does not affect port direction or is overridden for this option).

Note 1: Alternate assignment for ECCP2 when the CCP2MX Configuration bit is cleared (Microprocessor, Extended Microcontroller and Microcontroller with Boot Block modes, 80-pin devices only). Default assignment is RC1.

2: All other pin functions are disabled when ICSP or ICD operations are enabled.

© 2008 Microchip Technology Inc.

TABLE 11-4: SUMMARY OF REGISTERS ASSOCIATED WITH PORTB

Name	Bit 7	Bit 6	Bit 5	Bit 4	Bit 3	Bit 2	Bit 1	Bit 0	Reset Values on page
PORTB	RB7	RB6	RB5	RB4	RB3	RB2	RB1	RB0	60
LATB	LATB7	LATB6	LATB5	LATB4	LATB3	LATB2	LATB1	LATB0	60
TRISB	TRISB7	TRISB6	TRISB5	TRISB4	TRISB3	TRISB2	TRISB1	TRISB0	60
INTCON	GIE/GIEH	PEIE/GIEL	TMR0IE	INT0IE	RBIE	TMR0IF	INT0IF	RBIF	57
INTCON2	$\overline{\text{RBPU}}$	INTEDG0	INTEDG1	INTEDG2	INTEDG3	TMR0IP	INT3IP	RBIP	57
INTCON3	INT2IP	INT1IP	INT3IE	INT2IE	INT1IE	INT3IF	INT2IF	INT1IF	57

Legend: Shaded cells are not used by PORTB.

11.3 PORTC, TRISC and LATC Registers

PORTC is an 8-bit wide, bidirectional port. The corresponding Data Direction register is TRISC. Setting a TRISC bit (= 1) will make the corresponding PORTC pin an input (i.e., put the corresponding output driver in a high-impedance mode). Clearing a TRISC bit (= 0) will make the corresponding PORTC pin an output (i.e., put the contents of the output latch on the selected pin).

The Data Latch register (LATC) is also memory mapped. Read-modify-write operations on the LATC register read and write the latched output value for PORTC.

PORTC is multiplexed with several peripheral functions. All port pins have Schmitt Trigger input buffers. RC1 is normally configured by Configuration bit, CCP2MX, as the default peripheral pin of the ECCP2 module (default/erased state, CCP2MX = 1).

When enabling peripheral functions, care should be taken in defining TRIS bits for each PORTC pin. Some peripherals override the TRIS bit to make a pin an output, while other peripherals override the TRIS bit to make a pin an input. The user should refer to the corresponding peripheral section for the correct TRIS bit settings.

Note:	On a Power-on Reset, these pins are configured as digital inputs.

The contents of the TRISC register are affected by peripheral overrides. Reading TRISC always returns the current contents, even though a peripheral device may be overriding one or more of the pins.

EXAMPLE 11-3: INITIALIZING PORTC

```
CLRF    PORTC   ; Initialize PORTC by
                ; clearing output
                ; data latches
CLRF    LATC    ; Alternate method
                ; to clear output
                ; data latches
MOVLW   0CFh    ; Value used to
                ; initialize data
                ; direction
MOVWF   TRISC   ; Set RC<3:0> as inputs
                ; RC<5:4> as outputs
                ; RC<7:6> as inputs
```


© 2008 Microchip Technology Inc.

TABLE 11-5: PORTC FUNCTIONS

Pin Name	Function	TRIS Setting	I/O	I/O Type	Description
RC0/T1OSO/T13CKI	RC0	0	O	DIG	LATC<0> data output.
		1	I	ST	PORTC<0> data input.
	T1OSO	x	O	ANA	Timer1 oscillator output; enabled when Timer1 oscillator enabled. Disables digital I/O.
	T13CKI	1	I	ST	Timer1/Timer3 counter input.
RC1/T1OSI/ ECCP2/P2A	RC1	0	O	DIG	LATC<1> data output.
		1	I	ST	PORTC<1> data input.
	T1OSI	x	I	ANA	Timer1 oscillator input; enabled when Timer1 oscillator enabled. Disables digital I/O.
	ECCP2(1)	0	O	DIG	ECCP2 compare output and ECCP2 PWM output. Takes priority over port data.
		1	I	ST	ECCP2 capture input.
	P2A(1)	0	O	DIG	ECCP2 Enhanced PWM output, channel A. May be configured for tri-state during Enhanced PWM shutdown events. Takes priority over port data.
RC2/ECCP1/P1A	RC2	0	O	DIG	LATC<2> data output.
		1	I	ST	PORTC<2> data input.
	ECCP1	0	O	DIG	ECCP1 compare output and ECCP1 PWM output. Takes priority over port data.
		1	I	ST	ECCP1 capture input.
	P1A	0	O	DIG	ECCP1 Enhanced PWM output, channel A. May be configured for tri-state during Enhanced PWM shutdown events. Takes priority over port data.
RC3/SCK1/SCL1	RC3	0	O	DIG	LATC<3> data output.
		1	I	ST	PORTC<3> data input.
	SCK1	0	O	DIG	SPI clock output (MSSP1 module). Takes priority over port data.
		1	I	ST	SPI clock input (MSSP1 module).
	SCL1	0	O	DIG	I^2C™ clock output (MSSP1 module). Takes priority over port data.
		1	I	I^2C/SMB	I^2C clock input (MSSP1 module); input type depends on module setting.
RC4/SDI1/SDA1	RC4	0	O	DIG	LATC<4> data output.
		1	I	ST	PORTC<4> data input.
	SDI1	1	I	ST	SPI data input (MSSP1 module).
	SDA1	1	O	DIG	I^2C data output (MSSP1 module). Takes priority over port data.
		1	I	I^2C/SMB	I^2C data input (MSSP1 module); input type depends on module setting.
RC5/SDO1	RC5	0	O	DIG	LATC<5> data output.
		1	I	ST	PORTC<5> data input.
	SDO1	0	O	DIG	SPI data output (MSSP1 module). Takes priority over port data.

Legend: DIG = Digital level output; TTL = TTL input buffer; ST = Schmitt Trigger input buffer; ANA = Analog level input/output; I^2C/SMB = I^2C/SMBus input buffer; x = Don't care (TRIS bit does not affect port direction or is overridden for this option).

Note 1: Default assignment for ECCP2 when CCP2MX Configuration bit is set.

TABLE 11-5: PORTC FUNCTIONS (CONTINUED)

Pin Name	Function	TRIS Setting	I/O	I/O Type	Description
RC6/TX1/CK1	RC6	0	O	DIG	LATC<6> data output.
		1	I	ST	PORTC<6> data input.
	TX1	0	O	DIG	Asynchronous serial transmit data output (EUSART1 module). Takes priority over port data.
	CK1	0	O	DIG	Synchronous serial clock output (EUSART1 module). Takes priority over port data.
		1	I	ST	Synchronous serial clock input (EUSART1 module).
RC7/RX1/DT1	RC7	0	O	DIG	LATC<7> data output.
		1	I	ST	PORTC<7> data input.
	RX1	1	I	ST	Asynchronous serial receive data input (EUSART1 module)
	DT1	1	O	DIG	Synchronous serial data output (EUSART1 module). Takes priority over port data. User must configure as input.
		1	I	ST	Synchronous serial data input (EUSART1 module). User must configure as an input.

Legend: DIG = Digital level output; TTL = TTL input buffer; ST = Schmitt Trigger input buffer; ANA = Analog level input/output; I^2C/SMB = I^2C/SMBus input buffer; x = Don't care (TRIS bit does not affect port direction or is overridden for this option).

Note 1: Default assignment for ECCP2 when CCP2MX Configuration bit is set.

TABLE 11-6: SUMMARY OF REGISTERS ASSOCIATED WITH PORTC

Name	Bit 7	Bit 6	Bit 5	Bit 4	Bit 3	Bit 2	Bit 1	Bit 0	Reset Values on page
PORTC	RC7	RC6	RC5	RC4	RC3	RC2	RC1	RC0	60
LATC	LATC7	LATC6	LATC5	LATC4	LATC3	LATC2	LATC1	LATC0	60
TRISC	TRISC7	TRISC6	TRISC5	TRISC4	TRISC3	TRISC2	TRISC1	TRISC0	60

© 2008 Microchip Technology Inc.

11.4 PORTD, TRISD and LATD Registers

PORTD is an 8-bit wide, bidirectional port. The corresponding Data Direction register is TRISD. Setting a TRISD bit (= 1) will make the corresponding PORTD pin an input (i.e., put the corresponding output driver in a high-impedance mode). Clearing a TRISD bit (= 0) will make the corresponding PORTD pin an output (i.e., put the contents of the output latch on the selected pin).

The Data Latch register (LATD) is also memory mapped. Read-modify-write operations on the LATD register read and write the latched output value for PORTD.

All pins on PORTD are implemented with Schmitt Trigger input buffers. Each pin is individually configurable as an input or output.

Note:	On a Power-on Reset, these pins are configured as digital inputs.

In 80-pin devices, PORTD is multiplexed with the system bus as part of the external memory interface. I/O port and other functions are only available when the interface is disabled by setting the EBDIS bit (MEMCON<7>). When the interface is enabled, PORTD is the low-order byte of the multiplexed address/data bus (AD<7:0>). The TRISD bits are also overridden.

PORTD can also be configured to function as an 8-bit wide parallel microprocessor port by setting the PSPMODE control bit (PSPCON<4>). In this mode, parallel port data takes priority over other digital I/O (but not the external memory interface). When the parallel port is active, the input buffers are TTL. For more information, refer to **Section 11.10 "Parallel Slave Port"**.

EXAMPLE 11-4: INITIALIZING PORTD

```
CLRF    PORTD   ; Initialize PORTD by
                ; clearing output
                ; data latches
CLRF    LATD    ; Alternate method
                ; to clear output
                ; data latches
MOVLW   0CFh    ; Value used to
                ; initialize data
                ; direction
MOVWF   TRISD   ; Set RD<3:0> as inputs
                ; RD<5:4> as outputs
                ; RD<7:6> as inputs
```

TABLE 11-7: PORTD FUNCTIONS

Pin Name	Function	TRIS Setting	I/O	I/O Type	Description
RD0/AD0/PSP0	RD0	0	O	DIG	LATD<0> data output.
		1	I	ST	PORTD<0> data input.
	AD0(1)	x	O	DIG	External memory interface, address/data bit 0 output. Takes priority over PSP and port data.
		x	I	TTL	External memory interface, data bit 0 input.
	PSP0	x	O	DIG	PSP read data output (LATD<0>). Takes priority over port data.
		x	I	TTL	PSP write data input.
RD1/AD1/PSP1	RD1	0	O	DIG	LATD<1> data output.
		1	I	ST	PORTD<1> data input.
	AD1(1)	x	O	DIG	External memory interface, address/data bit 1 output. Takes priority over PSP and port data.
		x	I	TTL	External memory interface, data bit 1 input.
	PSP1	x	O	DIG	PSP read data output (LATD<1>). Takes priority over port data.
		x	I	TTL	PSP write data input.
RD2/AD2/PSP2	RD2	0	O	DIG	LATD<2> data output.
		1	I	ST	PORTD<2> data input.
	AD2(1)	x	O	DIG	External memory interface, address/data bit 2 output. Takes priority over PSP and port data.
		x	I	TTL	External memory interface, data bit 2 input.
	PSP2	x	O	DIG	PSP read data output (LATD<2>). Takes priority over port data.
		x	I	TTL	PSP write data input.
RD3/AD3/PSP3	RD3	0	O	DIG	LATD<3> data output.
		1	I	ST	PORTD<3> data input.
	AD3(1)	x	O	DIG	External memory interface, address/data bit 3 output. Takes priority over PSP and port data.
		x	I	TTL	External memory interface, data bit 3 input.
	PSP3	x	O	DIG	PSP read data output (LATD<3>). Takes priority over port data.
		x	I	TTL	PSP write data input.
RD4/AD4/ PSP4/SDO2	RD4	0	O	DIG	LATD<4> data output.
		1	I	ST	PORTD<4> data input.
	AD4(1)	x	O	DIG	External memory interface, address/data bit 4 output. Takes priority over PSP, MSSP and port data.
		x	I	TTL	External memory interface, data bit 4 input.
	PSP4	x	O	DIG	PSP read data output (LATD<4>). Takes priority over port and PSP data.
		x	I	TTL	PSP write data input.
	SDO2	0	O	DIG	SPI data output (MSSP2 module). Takes priority over PSP and port data.

Legend: PWR = Power Supply, O = Output, I = Input, ANA = Analog Signal, DIG = Digital Output, ST = Schmitt Buffer Input, TTL = TTL Buffer Input, x = Don't care (TRIS bit does not affect port direction or is overridden for this option).

Note 1: Implemented on 80-pin devices only.

© 2008 Microchip Technology Inc.

TABLE 11-7: PORTD FUNCTIONS (CONTINUED)

Pin Name	Function	TRIS Setting	I/O	I/O Type	Description
RD5/AD5/ PSP5/SDI2 /SDA2	RD5	0	O	DIG	LATD<5> data output.
		1	I	ST	PORTD<5> data input.
	AD5(1)	x	O	DIG	External memory interface, address/data bit 5 output. Takes priority over PSP, MSSP and port data.
		x	I	TTL	External memory interface, data bit 5 input.
	PSP5	x	O	DIG	PSP read data output (LATD<5>). Takes priority over port data.
		x	I	TTL	PSP write data input.
	SDI2	1	I	ST	SPI data input (MSSP2 module).
	SDA2	1	O	DIG	I^2C™ data output (MSSP2 module). Takes priority over PSP and port data.
		1	I	I^2C/SMB	I^2C data input (MSSP2 module); input type depends on module setting.
RD6/AD6/ PSP6/SCK2/ SCL2	RD6	0	O	DIG	LATD<6> data output.
		1	I	ST	PORTD<6> data input.
	AD6(1)	x	O	DIG-3	External memory interface, address/data bit 6 output. Takes priority over PSP, MSSP and port data.
		x	I	TTL	External memory interface, data bit 6 input.
	PSP6	x	O	DIG	PSP read data output (LATD<6>). Takes priority over port data.
		x	I	TTL	PSP write data input.
	SCK2	0	O	DIG	SPI clock output (MSSP2 module). Takes priority over PSP and port data.
		1	I	ST	SPI clock input (MSSP2 module).
	SCL2	0	O	DIG	I^2C clock output (MSSP2 module). Takes priority over PSP and port data.
		1	I	I^2C/SMB	I^2C clock input (MSSP2 module); input type depends on module setting.
RD7/AD7/ PSP7/$\overline{SS2}$	RD7	0	O	DIG	LATD<7> data output.
		1	I	ST	PORTD<7> data input.
	AD7(1)	x	O	DIG	External memory interface, address/data bit 7 output. Takes priority over PSP and port data.
		x	I	TTL	External memory interface, data bit 7 input.
	PSP7	x	O	DIG	PSP read data output (LATD<7>). Takes priority over port data.
		x	I	TTL	PSP write data input.
	$\overline{SS2}$	1	I	TTL	Slave select input for SSP (MSSP2 module).

Legend: PWR = Power Supply, O = Output, I = Input, ANA = Analog Signal, DIG = Digital Output, ST = Schmitt Buffer Input, TTL = TTL Buffer Input, x = Don't care (TRIS bit does not affect port direction or is overridden for this option).

Note 1: Implemented on 80-pin devices only.

TABLE 11-8: SUMMARY OF REGISTERS ASSOCIATED WITH PORTD

Name	Bit 7	Bit 6	Bit 5	Bit 4	Bit 3	Bit 2	Bit 1	Bit 0	Reset Values on page
PORTD	RD7	RD6	RD5	RD4	RD3	RD2	RD1	RD0	60
LATD	LATD7	LATD6	LATD5	LATD4	LATD3	LATD2	LATD1	LATD0	60
TRISD	TRISD7	TRISD6	TRISD5	TRISD4	TRISD3	TRISD2	TRISD1	TRISD0	60

11.5 PORTE, TRISE and LATE Registers

PORTE is an 8-bit wide, bidirectional port. The corresponding Data Direction register is TRISE. Setting a TRISE bit (= 1) will make the corresponding PORTE pin an input (i.e., put the corresponding output driver in a high-impedance mode). Clearing a TRISE bit (= 0) will make the corresponding PORTE pin an output (i.e., put the contents of the output latch on the selected pin).

The Data Latch register (LATE) is also memory mapped. Read-modify-write operations on the LATE register read and write the latched output value for PORTE.

All pins on PORTE are implemented with Schmitt Trigger input buffers. Each pin is individually configurable as an input or output.

Note:	On a Power-on Reset, these pins are configured as digital inputs.

When the device is operating in Microcontroller mode, pin RE7 can be configured as the alternate peripheral pin for the ECCP2 module. This is done by clearing the CCP2MX Configuration bit.

In 80-pin devices, PORTE is multiplexed with the system bus as part of the external memory interface. I/O port and other functions are only available when the interface is disabled by setting the EBDIS bit (MEMCON<7>). When the interface is enabled (80-pin devices only), PORTE is the high-order byte of the multiplexed address/data bus (AD<15:8>). The TRISE bits are also overridden.

When the Parallel Slave Port is active on PORTD, three of the PORTE pins (RE0/AD8/$\overline{RD}$/P2D, RE1/AD9/$\overline{WR}$/P2C and RE2/AD10/$\overline{CS}$/P2B) are configured as digital control inputs for the port. The control functions are summarized in Table 11-9. The reconfiguration occurs automatically when the PSPMODE control bit (PSPCON<4>) is set. Users must still make certain the corresponding TRISE bits are set to configure these pins as digital inputs.

EXAMPLE 11-5: INITIALIZING PORTE

```
CLRF    PORTE   ; Initialize PORTE by
                ; clearing output
                ; data latches
CLRF    LATE    ; Alternate method
                ; to clear output
                ; data latches
MOVLW   03h     ; Value used to
                ; initialize data
                ; direction
MOVWF   TRISE   ; Set RE<1:0> as inputs
                ; RE<7:2> as outputs
```


© 2008 Microchip Technology Inc.

TABLE 11-9: PORTE FUNCTIONS

Pin Name	Function	TRIS Setting	I/O	I/O Type	Description
RE0/AD8/ $\overline{\text{RD}}$/P2D	RE0	0	O	DIG	LATE<0> data output.
		1	I	ST	PORTE<0> data input.
	AD8(2)	x	O	DIG	External memory interface, address/data bit 8 output. Takes priority over ECCP and port data.
		x	I	TTL	External memory interface, data bit 8 input.
	$\overline{\text{RD}}$	1	I	TTL	Parallel Slave Port read enable control input.
	P2D	0	O	DIG	ECCP2 Enhanced PWM output, channel D. May be configured for tri-state during Enhanced PWM shutdown events. Takes priority over port data.
RE1/AD9/ $\overline{\text{WR}}$/P2C	RE1	0	O	DIG	LATE<1> data output.
		1	I	ST	PORTE<1> data input.
	AD9(2)	x	O	DIG	External memory interface, address/data bit 9 output. Takes priority over ECCP and port data.
		x	I	TTL	External memory interface, data bit 9 input.
	$\overline{\text{WR}}$	1	I	TTL	Parallel Slave Port write enable control input.
	P2C	0	O	DIG	ECCP2 Enhanced PWM output, channel C. May be configured for tri-state during Enhanced PWM shutdown events. Takes priority over port data.
RE2/AD10/ $\overline{\text{CS}}$/P2B	RE2	0	O	DIG	LATE<2> data output.
		1	I	ST	PORTE<2> data input.
	AD10(2)	x	O	DIG	External memory interface, address/data bit 10 output. Takes priority over ECCP and port data.
		x	I	TTL	External memory interface, data bit 10 input.
	$\overline{\text{CS}}$	1	I	TTL	Parallel Slave Port chip select control input.
	P2B	0	O	DIG	ECCP2 Enhanced PWM output, channel B. May be configured for tri-state during Enhanced PWM shutdown events. Takes priority over port data.
RE3/AD11/P3C	RE3	0	O	DIG	LATE<3> data output.
		1	I	ST	PORTE<3> data input.
	AD11(2)	x	O	DIG	External memory interface, address/data bit 11 output. Takes priority over ECCP and port data.
		x	I	TTL	External memory interface, data bit 11 input.
	P3C	0	O	DIG	ECCP3 Enhanced PWM output, channel C. May be configured for tri-state during Enhanced PWM shutdown events. Takes priority over port data.
RE4/AD12/P3B	RE4	0	O	DIG	LATE<4> data output.
		1	I	ST	PORTE<4> data input.
	AD12(2)	x	O	DIG	External memory interface, address/data bit 12 output. Takes priority over ECCP and port data.
		x	I	TTL	External memory interface, data bit 12 input.
	P3B	0	O	DIG	ECCP3 Enhanced PWM output, channel B. May be configured for tri-state during Enhanced PWM shutdown events. Takes priority over port data.

Legend: PWR = Power Supply, O = Output, I = Input, ANA = Analog Signal, DIG = Digital Output, ST = Schmitt Buffer Input, TTL = TTL Buffer Input, x = Don't care (TRIS bit does not affect port direction or is overridden for this option).

Note 1: Alternate assignment for ECCP2 when CCP2MX Configuration bit is cleared (all devices in Microcontroller mode).

2: Implemented on 80-pin devices only.

TABLE 11-9: PORTE FUNCTIONS (CONTINUED)

Pin Name	Function	TRIS Setting	I/O	I/O Type	Description
RE5/AD13/P1C	RE5	0	O	DIG	LATE<5> data output.
		1	I	ST	PORTE<5> data input.
	AD13(2)	x	O	DIG	External memory interface, address/data bit 13 output. Takes priority over ECCP and port data.
		x	I	TTL	External memory interface, data bit 13 input.
	P1C	0	O	DIG	ECCP1 Enhanced PWM output, channel C. May be configured for tri-state during Enhanced PWM shutdown events. Takes priority over port data.
RE6/AD14/P1B	RE6	0	O	DIG	LATE<6> data output.
		1	I	ST	PORTE<6> data input.
	AD14(2)	x	O	DIG	External memory interface, address/data bit 14 output. Takes priority over ECCP and port data.
		x	I	TTL	External memory interface, data bit 14 input.
	P1B	0	O	DIG	ECCP1 Enhanced PWM output, channel B. May be configured for tri-state during Enhanced PWM shutdown events. Takes priority over port data.
RE7/AD15/ ECCP2/P2A	RE7	0	O	DIG	LATE<7> data output.
		1	I	ST	PORTE<7> data input.
	AD15(2)	x	O	DIG	External memory interface, address/data bit 15 output. Takes priority over ECCP and port data.
		x	I	TTL	External memory interface, data bit 15 input.
	ECCP2(1)	0	O	DIG	ECCP2 compare output and ECCP2 PWM output. Takes priority over port data.
		1	I	ST	ECCP2 capture input.
	P2A(1)	0	O	DIG	ECCP2 Enhanced PWM output, channel A. Takes priority over port and data. May be configured for tri-state during Enhanced PWM shutdown events.

Legend: PWR = Power Supply, O = Output, I = Input, ANA = Analog Signal, DIG = Digital Output, ST = Schmitt Buffer Input, TTL = TTL Buffer Input, x = Don't care (TRIS bit does not affect port direction or is overridden for this option).

Note 1: Alternate assignment for ECCP2 when CCP2MX Configuration bit is cleared (all devices in Microcontroller mode).

2: Implemented on 80-pin devices only.

TABLE 11-10: SUMMARY OF REGISTERS ASSOCIATED WITH PORTE

Name	Bit 7	Bit 6	Bit 5	Bit 4	Bit 3	Bit 2	Bit 1	Bit 0	Reset Values on page
PORTE	RE7	RE6	RE5	RE4	RE3	RE2	RE1	RE0	60
LATE	LATE7	LATE6	LATE5	LATE4	LATE3	LATE2	LATE1	LATE0	60
TRISE	TRISE7	TRISE6	TRISE5	TRISE4	TRISE3	TRISE2	TRISE1	TRISE0	60

© 2008 Microchip Technology Inc.

11.6 PORTF, LATF and TRISF Registers

PORTF is an 8-bit wide, bidirectional port. The corresponding Data Direction register is TRISF. Setting a TRISF bit (= 1) will make the corresponding PORTF pin an input (i.e., put the corresponding output driver in a high-impedance mode). Clearing a TRISF bit (= 0) will make the corresponding PORTF pin an output (i.e., put the contents of the output latch on the selected pin).

The Data Latch register (LATF) is also memory mapped. Read-modify-write operations on the LATF register read and write the latched output value for PORTF.

All pins on PORTF are implemented with Schmitt Trigger input buffers. Each pin is individually configurable as an input or output.

PORTF is multiplexed with several analog peripheral functions, including the A/D converter and comparator inputs, as well as the comparator outputs. Pins RF1 through RF2 may be used as comparator inputs or outputs by setting the appropriate bits in the CMCON register. To use RF<6:0:> as digital inputs, it is necessary to turn off the A/D inputs.

Note 1: On a Power-on Reset, the RF<6:0> pins are configured as analog inputs and read as '0'.

2: To configure PORTF as digital I/O, set the ADCON1 register.

EXAMPLE 11-6: INITIALIZING PORTF

```
CLRF    PORTF   ; Initialize PORTF by
                ; clearing output
                ; data latches
CLRF    LATF    ; Alternate method
                ; to clear output
                ; data latches
MOVLW   0x0F    ;
MOVWF   ADCON1  ; Set PORTF as digital I/O
MOVLW   0xCF    ; Value used to
                ; initialize data
                ; direction
MOVWF   TRISF   ; Set RF3:RF0 as inputs
                ; RF5:RF4 as outputs
                ; RF7:RF6 as inputs
```

TABLE 11-11: PORTF FUNCTIONS

Pin Name	Function	TRIS Setting	I/O	I/O Type	Description
RF0/AN5	RF0	0	O	DIG	LATF<0> data output; not affected by analog input.
		1	I	ST	PORTF<0> data input; disabled when analog input enabled.
	AN5	1	I	ANA	A/D input channel 5. Default configuration on POR.
RF1/AN6/C2OUT	RF1	0	O	DIG	LATF<1> data output; not affected by analog input.
		1	I	ST	PORTF<1> data input; disabled when analog input enabled.
	AN6	1	I	ANA	A/D input channel 6. Default configuration on POR.
	C2OUT	0	O	DIG	Comparator 2 output; takes priority over port data.
RF2/AN7/C1OUT	RF2	0	O	DIG	LATF<2> data output; not affected by analog input.
		1	I	ST	PORTF<2> data input; disabled when analog input enabled.
	AN7	1	I	ANA	A/D input channel 7. Default configuration on POR.
	C1OUT	0	O	TTL	Comparator 1 output; takes priority over port data.
RF3/AN8	RF3	0	O	DIG	LATF<3> data output; not affected by analog input.
		1	I	ST	PORTF<3> data input; disabled when analog input enabled.
	AN8	1	I	ANA	A/D input channel 8 and Comparator C2+ input. Default input configuration on POR; not affected by analog output.
RF4/AN9	RF4	0	O	DIG	LATF<4> data output; not affected by analog input.
		1	I	ST	PORTF<4> data input; disabled when analog input enabled.
	AN9	1	I	ANA	A/D input channel 9 and Comparator C2- input. Default input configuration on POR; does not affect digital output.
RF5/AN10/CVREF	RF5	0	O	DIG	LATF<5> data output; not affected by analog input. Disabled when CVREF output enabled.
		1	I	ST	PORTF<5> data input; disabled when analog input enabled. Disabled when CVREF output enabled.
	AN10	1	I	ANA	A/D input channel 10 and Comparator C1+ input. Default input configuration on POR; not affected by analog output.
	CVREF	x	O	ANA	Comparator voltage reference output. Enabling this feature disables digital I/O.
RF6/AN11	RF6	0	O	DIG	LATF<6> data output; not affected by analog input.
		1	I	ST	PORTF<6> data input; disabled when analog input enabled.
	AN11	1	I	ANA	A/D input channel 11 and Comparator C1- input. Default input configuration on POR; does not affect digital output.
RF7/$\overline{SS1}$	RF7	0	O	DIG	LATF<7> data output.
		1	I	ST	PORTF<7> data input.
	$\overline{SS1}$	1	I	TTL	Slave select input for SSP (MSSP1 module).

Legend: PWR = Power Supply, O = Output, I = Input, ANA = Analog Signal, DIG = Digital Output, ST = Schmitt Buffer Input, TTL = TTL Buffer Input, x = Don't care (TRIS bit does not affect port direction or is overridden for this option).

TABLE 11-12: SUMMARY OF REGISTERS ASSOCIATED WITH PORTF

Name	Bit 7	Bit 6	Bit 5	Bit 4	Bit 3	Bit 2	Bit 1	Bit 0	Reset Values on page
TRISF	TRISF7	TRISF6	TRISF5	TRISF4	TRISF3	TRISF2	TRISF1	TRISF0	60
PORTF	RF7	RF6	RF5	RF4	RF3	RF2	RF1	RF0	60
LATF	LATF7	LATF6	LATF5	LATF4	LATF3	LATF2	LATF1	LATF0	60
ADCON1	—	—	VCFG1	VCFG0	PCFG3	PCFG2	PCFG1	PCFG0	59
CMCON	C2OUT	C1OUT	C2INV	C1INV	CIS	CM2	CM1	CM0	59

Legend: — = unimplemented, read as '0'. Shaded cells are not used by PORTF.

© 2008 Microchip Technology Inc.

11.7 PORTG, TRISG and LATG Registers

PORTG is a 6-bit wide, bidirectional port. The corresponding Data Direction register is TRISG. Setting a TRISG bit (= 1) will make the corresponding PORTG pin an input (i.e., put the corresponding output driver in a high-impedance mode). Clearing a TRISG bit (= 0) will make the corresponding PORTG pin an output (i.e., put the contents of the output latch on the selected pin).

The Data Latch register (LATG) is also memory mapped. Read-modify-write operations on the LATG register, read and write the latched output value for PORTG.

PORTG is multiplexed with EUSART and CCP functions (Table 11-13). PORTG pins have Schmitt Trigger input buffers.

When enabling peripheral functions, care should be taken in defining TRIS bits for each PORTG pin. Some peripherals override the TRIS bit to make a pin an output, while other peripherals override the TRIS bit to make a pin an input. The user should refer to the corresponding peripheral section for the correct TRIS bit settings. The pin override value is not loaded into the TRIS register. This allows read-modify-write of the TRIS register without concern due to peripheral overrides.

The sixth pin of PORTG (RG5/$\overline{\text{MCLR}}$/VPP) is an input only pin. Its operation is controlled by the MCLRE Configuration bit. When selected as a port pin (MCLRE = 0), it functions as a digital input only pin; as such, it does not have TRIS or LAT bits associated with its operation. Otherwise, it functions as the device's Master Clear input. In either configuration, RG5 also functions as the programming voltage input during programming.

Note:	On a Power-on Reset, RG5 is enabled as a digital input only if Master Clear functionality is disabled. All other 5 pins are configured as digital inputs.

EXAMPLE 11-7: INITIALIZING PORTG

```
CLRF    PORTG   ; Initialize PORTG by
                ; clearing output
                ; data latches
CLRF    LATG    ; Alternate method
                ; to clear output
                ; data latches
MOVLW   0x04    ; Value used to
                ; initialize data
                ; direction
MOVWF   TRISG   ; Set RG1:RG0 as outputs
                ; RG2 as input
                ; RG4:RG3 as inputs
```

TABLE 11-13: PORTG FUNCTIONS

Pin Name	Function	TRIS Setting	I/O	I/O Type	Description
RG0/ECCP3/P3A	RG0	0	O	DIG	LATG<0> data output.
		1	I	ST	PORTG<0> data input.
	ECCP3	0	O	DIG	ECCP3 compare and ECCP3 PWM output. Takes priority over port data.
		1	I	ST	ECCP3 capture input.
	P3A	0	O	DIG	ECCP3 Enhanced PWM output, channel B. May be configured for tri-state during Enhanced PWM shutdown events. Takes priority over port data.
RG1/TX2/CK2	RG1	0	O	DIG	LATG<1> data output.
		1	I	ST	PORTG<1> data input.
	TX2	0	O	DIG	Asynchronous serial transmit data output (EUSART2 module). Takes priority over port data.
	CK2	0	O	DIG	Synchronous serial clock output (EUSART2 module). Takes priority over port data.
		1	I	ST	Synchronous serial clock input (EUSART2 module).
RG2/RX2/DT2	RG2	0	O	DIG	LATG<2> data output.
		1	I	ST	PORTG<2> data input.
	RX2	1	I	ST	Asynchronous serial receive data input (EUSART2 module).
	DT2	1	O	DIG	Synchronous serial data output (EUSART2 module). Takes priority over port data. User must configure as an input.
		1	I	ST	Synchronous serial data input (EUSART2 module). User must configure as an input.
RG3/CCP4/P3D	RG3	0	O	DIG	LATG<3> data output.
		1	I	ST	PORTG<3> data input.
	CCP4	0	O	DIG	CCP4 compare and PWM output; takes priority over port data and P3D function.
		1	I	ST	CCP4 capture input.
	P3D	0	O	DIG	ECCP3 Enhanced PWM output, channel D. May be configured for tri-state during Enhanced PWM shutdown events. Takes priority over port data.
RG4/CCP5/P1D	RG4	0	O	DIG	LATG<4> data output.
		1	I	ST	PORTG<4> data input.
	CCP5	0	O	DIG	CCP5 compare and PWM output. Takes priority over port data and P1D function.
		1	I	ST	CCP5 capture input.
	P1D	0	O	DIG	ECCP1 Enhanced PWM output, channel B. May be configured for tri-state during Enhanced PWM shutdown events. Takes priority over port data.
RG5/$\overline{\text{MCLR}}$/VPP	RG5	—(1)	I	ST	PORTG<5> data input; enabled when MCLRE Configuration bit is clear.
	$\overline{\text{MCLR}}$	—	I	ST	External Master Clear input; enabled when MCLRE Configuration bit is set.
	VPP	—	I	ANA	High-voltage detection; used for ICSP™ mode entry detection. Always available regardless of pin mode.

Legend: PWR = Power Supply, O = Output, I = Input, ANA = Analog Signal, DIG = Digital Output, ST = Schmitt Buffer Input, TTL = TTL Buffer Input, x = Don't care (TRIS bit does not affect port direction or is overridden for this option).

Note 1: RG5 does not have a corresponding TRISG bit.

© 2008 Microchip Technology Inc.

TABLE 11-14: SUMMARY OF REGISTERS ASSOCIATED WITH PORTG

Name	Bit 7	Bit 6	Bit 5	Bit 4	Bit 3	Bit 2	Bit 1	Bit 0	Reset Values on page
PORTG	—	—	RG5(1)	RG4	RG3	RG2	RG1	RG0	60
LATG	—	—	LATG5(1)	LATG4	LATG3	LATG2	LATG1	LATG0	60
TRISG	—	—	—	TRISG4	TRISG3	TRISG2	TRISG1	TRISG0	60

Legend: — = unimplemented, read as '0'. Shaded cells are not used by PORTG.

Note 1: RG5 and LATG5 are only available when $\overline{\text{MCLR}}$ is disabled (MCLRE Configuration bit = 0; otherwise, RG5 and LATG5 read as '0'.

11.8 PORTH, LATH and TRISH Registers

Note: PORTH is available only on PIC18F8527/8622/8627/8722 devices.

PORTH is an 8-bit wide, bidirectional I/O port. The corresponding Data Direction register is TRISH. Setting a TRISH bit (= 1) will make the corresponding PORTH pin an input (i.e., put the corresponding output driver in a high-impedance mode). Clearing a TRISH bit (= 0) will make the corresponding PORTH pin an output (i.e., put the contents of the output latch on the selected pin).

The Data Latch register (LATH) is also memory mapped. Read-modify-write operations on the LATH register, read and write the latched output value for PORTH.

All pins on PORTH are implemented with Schmitt Trigger input buffers. Each pin is individually configurable as an input or output.

Note: On a Power-on Reset, these pins are configured as digital inputs.

When the external memory interface is enabled, four of the PORTH pins function as the high-order address lines for the interface. The address output from the interface takes priority over other digital I/O. The corresponding TRISH bits are also overridden.

EXAMPLE 11-8: INITIALIZING PORTH

```
CLRF    PORTH       ; Initialize PORTH by
                    ; clearing output
                    ; data latches
CLRF    LATH        ; Alternate method
                    ; to clear output
                    ; data latches
MOVLW   0CFh        ; Value used to
                    ; initialize data
                    ; direction
MOVWF   TRISH       ; Set RH3:RH0 as inputs
                    ; RH5:RH4 as outputs
                    ; RH7:RH6 as inputs
```


© 2008 Microchip Technology Inc.

TABLE 11-15: PORTH FUNCTIONS

Pin Name	Function	TRIS Setting	I/O	I/O Type	Description
RH0/A16	RH0	0	O	DIG	LATH<0> data output.
		1	I	ST	PORTH<0> data input.
	A16	x	O	DIG	External memory interface, address line 16. Takes priority over port data.
RH1/A17	RH1	0	O	DIG	LATH<1> data output.
		1	I	ST	PORTH<1> data input.
	A17	x	O	DIG	External memory interface, address line 17. Takes priority over port data.
RH2/A18	RH2	0	O	DIG	LATH<2> data output.
		1	I	ST	PORTH<2> data input.
	A18	x	O	DIG	External memory interface, address line 18. Takes priority over port data.
RH3/A19	RH3	0	O	DIG	LATH<3> data output.
		1	I	ST	PORTH<3> data input.
	A19	x	O	DIG	External memory interface, address line 19. Takes priority over port data.
RH4/AN12/ P3C	RH4	0	O	DIG	LATH<4> data output.
		1	I	ST	PORTH<4> data input.
	AN12	1	I	ANA	A/D input channel 12. Default configuration on POR.
	P3C(1)	0	O	DIG	ECCP3 Enhanced PWM output, channel C. May be configured for tri-state during Enhanced PWM shutdown events. Takes priority over port data.
RH5/AN13/ P3B	RH5	0	O	DIG	LATH<5> data output.
		1	I	ST	PORTH<5> data input.
	AN13	1	I	ANA	A/D input channel 13. Default configuration on POR.
	P3B(1)	0	O	DIG	ECCP3 Enhanced PWM output, channel B. May be configured for tri-state during Enhanced PWM shutdown events. Takes priority over port data.
RH6/AN14/ P1C	RH6	0	O	DIG	LATH<6> data output.
		1	I	ST	PORTH<6> data input.
	AN14	1	I	ANA	A/D input channel 14. Default configuration on POR.
	P1C(1)	0	O	DIG	ECCP1 Enhanced PWM output, channel C. May be configured for tri-state during Enhanced PWM shutdown events. Takes priority over port data.
RH7/AN15/ P1B	RH7	0	O	DIG	LATH<7> data output.
		1	I	ST	PORTH<7> data input.
	AN15	1	I	ANA	A/D input channel 15. Default configuration on POR.
	P1B(1)	0	O	DIG	ECCP1 Enhanced PWM output, channel B. May be configured for tri-state during Enhanced PWM shutdown events. Takes priority over port data.

Legend: PWR = Power Supply, O = Output, I = Input, ANA = Analog Signal, DIG = Digital Output, ST = Schmitt Buffer Input, TTL = TTL Buffer Input, x = Don't care (TRIS bit does not affect port direction or is overridden for this option).

Note 1: Alternate assignment for P1B/P1C/P3B/P3C (ECCPMX is clear).

TABLE 11-16: SUMMARY OF REGISTERS ASSOCIATED WITH PORTH

Name	Bit 7	Bit 6	Bit 5	Bit 4	Bit 3	Bit 2	Bit 1	Bit 0	Reset Values on page
TRISH	TRISH7	TRISH6	TRISH5	TRISH4	TRISH3	TRISH2	TRISH1	TRISH0	60
PORTH	RH7	RH6	RH5	RH4	RH3	RH2	RH1	RH0	60
LATH	LATH7	LATH6	LATH5	LATH4	LATH3	LATH2	LATH1	LATH0	60
ADCON1	—	—	VCFG1	VCFG0	PCFG3	PCFG2	PCFG1	PCFG0	59

11.9 PORTJ, TRISJ and LATJ Registers

Note:	PORTJ is available only on PIC18F8527/8622/8627/8722 devices.

PORTJ is an 8-bit wide, bidirectional port. The corresponding Data Direction register is TRISJ. Setting a TRISJ bit (= 1) will make the corresponding PORTJ pin an input (i.e., put the corresponding output driver in a high-impedance mode). Clearing a TRISJ bit (= 0) will make the corresponding PORTJ pin an output (i.e., put the contents of the output latch on the selected pin).

The Data Latch register (LATJ) is also memory mapped. Read-modify-write operations on the LATJ register, read and write the latched output value for PORTJ.

All pins on PORTJ are implemented with Schmitt Trigger input buffers. Each pin is individually configurable as an input or output.

Note:	On a Power-on Reset, these pins are configured as digital inputs.

When the external memory interface is enabled, all of the PORTJ pins function as control outputs for the interface. This occurs automatically when the interface is enabled by clearing the EBDIS control bit (MEMCON<7>). The TRISJ bits are also overridden.

EXAMPLE 11-9: INITIALIZING PORTJ

```
CLRF   PORTJ   ; Initialize PORTJ by
               ; clearing output
               ; data latches
CLRF   LATJ    ; Alternate method
               ; to clear output
               ; data latches
MOVLW 0xCF     ; Value used to
               ; initialize data
               ; direction
MOVWF TRISJ    ; Set RJ3:RJ0 as inputs
               ; RJ5:RJ4 as output
               ; RJ7:RJ6 as inputs
```


© 2008 Microchip Technology Inc.

TABLE 11-17: PORTJ FUNCTIONS

Pin Name	Function	TRIS Setting	I/O	I/O Type	Description
RJ0/ALE	RJ0	0	O	DIG	LATJ<0> data output.
		1	I	ST	PORTJ<0> data input.
	ALE	x	O	DIG	External memory interface address latch enable control output. Takes priority over digital I/O.
RJ1/$\overline{OE}$	RJ1	0	O	DIG	LATJ<1> data output.
		1	I	ST	PORTJ<1> data input.
	$\overline{OE}$	x	O	DIG	External memory interface output enable control output. Takes priority over digital I/O.
RJ2/$\overline{WRL}$	RJ2	0	O	DIG	LATJ<2> data output.
		1	I	ST	PORTJ<2> data input.
	$\overline{WRL}$	x	O	DIG	External Memory Bus write low byte control. Takes priority over digital I/O.
RJ3/$\overline{WRH}$	RJ3	0	O	DIG	LATJ<3> data output.
		1	I	ST	PORTJ<3> data input.
	$\overline{WRH}$	x	O	DIG	External memory interface write high byte control output. Takes priority over digital I/O.
RJ4/BA0	RJ4	0	O	DIG	LATJ<4> data output.
		1	I	ST	PORTJ<4> data input.
	BA0	x	O	DIG	External memory interface byte address 0 control output. Takes priority over digital I/O.
RJ5/$\overline{CE}$	RJ5	0	O	DIG	LATJ<5> data output.
		1	I	ST	PORTJ<5> data input.
	$\overline{CE}$	x	O	DIG	External memory interface chip enable control output. Takes priority over digital I/O.
RJ6/$\overline{LB}$	RJ6	0	O	DIG	LATJ<6> data output.
		1	I	ST	PORTJ<6> data input.
	$\overline{LB}$	x	O	DIG	External memory interface lower byte enable control output. Takes priority over digital I/O.
RJ7/$\overline{UB}$	RJ7	0	O	DIG	LATJ<7> data output.
		1	I	ST	PORTJ<7> data input.
	$\overline{UB}$	x	O	DIG	External memory interface upper byte enable control output. Takes priority over digital I/O.

Legend: PWR = Power Supply, O = Output, I = Input, ANA = Analog Signal, DIG = Digital Output, ST = Schmitt Buffer Input, TTL = TTL Buffer Input, x = Don't care (TRIS bit does not affect port direction or is overridden for this option).

TABLE 11-18: SUMMARY OF REGISTERS ASSOCIATED WITH PORTJ

Name	Bit 7	Bit 6	Bit 5	Bit 4	Bit 3	Bit 2	Bit 1	Bit 0	Reset Values on page
PORTJ	RJ7	RJ6	RJ5	RJ4	RJ3	RJ2	RJ1	RJ0	60
LATJ	LATJ7	LATJ6	LATJ5	LATJ4	LATJ3	LATJ2	LATJ1	LATJ0	60
TRISJ	TRISJ7	TRISJ6	TRISJ5	TRISJ4	TRISJ3	TRISJ2	TRISJ1	TRISJ0	60

11.10 Parallel Slave Port

PORTD can also function as an 8-bit wide Parallel Slave Port, or microprocessor port, when control bit PSPMODE (PSPCON<4>) is set. It is asynchronously readable and writable by the external world through the $\overline{RD}$ and $\overline{WR}$ control input pins.

Note:	For PIC18F8527/8622/8627/8722 devices, the Parallel Slave Port is available only in Microcontroller mode.

The PSP can directly interface to an 8-bit microprocessor data bus. The external microprocessor can read or write the PORTD latch as an 8-bit latch. Setting bit PSPMODE enables port pin RE0/$\overline{RD}$ to be the $\overline{RD}$ input, RE1/$\overline{WR}$ to be the $\overline{WR}$ input and RE2/$\overline{CS}$ to be the $\overline{CS}$ (Chip Select) input. For this functionality, the corresponding data direction bits of the TRISE register (TRISE<2:0>) must be configured as inputs (set).

A write to the PSP occurs when both the $\overline{CS}$ and $\overline{WR}$ lines are first detected low and ends when either are detected high. The PSPIF and IBF flag bits are both set when the write ends.

A read from the PSP occurs when both the $\overline{CS}$ and $\overline{RD}$ lines are first detected low. The data in PORTD is read out and the OBF bit is set. If the user writes new data to PORTD to set OBF, the data is immediately read out; however, the OBF bit is not set.

When either the $\overline{CS}$ or $\overline{RD}$ lines are detected high, the PORTD pins return to the input state and the PSPIF bit is set. User applications should wait for PSPIF to be set before servicing the PSP; when this happens, the IBF and OBF bits can be polled and the appropriate action taken.

The timing for the control signals in Write and Read modes is shown in Figure 11-3 and Figure 11-4, respectively.

FIGURE 11-2: PORTD AND PORTE BLOCK DIAGRAM (PARALLEL SLAVE PORT)

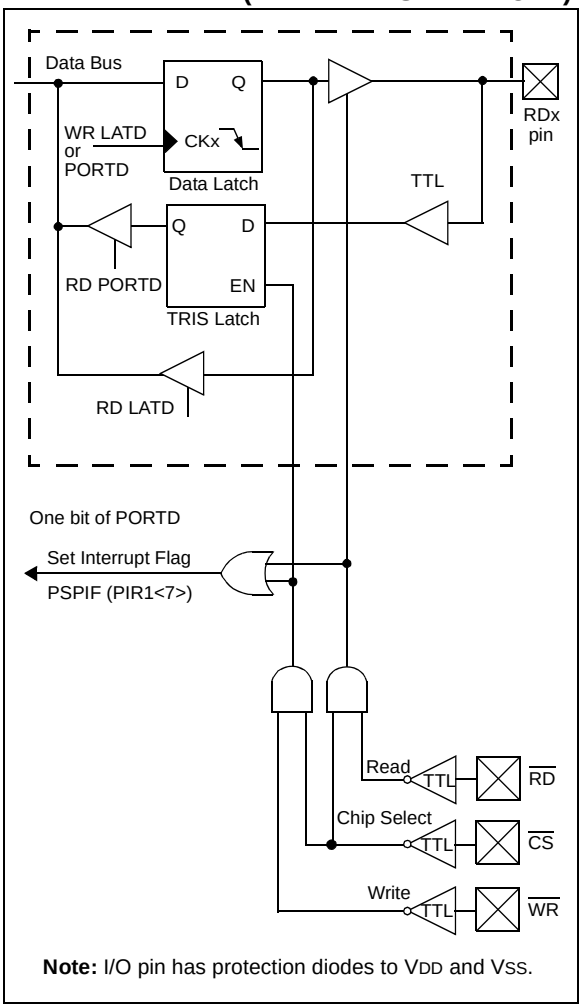

Note: I/O pin has protection diodes to V_{DD} and V_{SS}.

© 2008 Microchip Technology Inc.

REGISTER 11-1: PSPCON: PARALLEL SLAVE PORT CONTROL REGISTER

R-0	R-0	R/W-0	R/W-0	U-0	U-0	U-0	U-0
IBF	OBF	IBOV	PSPMODE	—	—	—	—
bit 7							bit 0

Legend:			
R = Readable bit	W = Writable bit	U = Unimplemented bit, read as ‘0’	
-n = Value at POR	‘1’ = Bit is set	‘0’ = Bit is cleared	x = Bit is unknown

bit 7 **IBF:** Input Buffer Full Status bit
1 = A word has been received and is waiting to be read by the CPU
0 = No word has been received

bit 6 **OBF:** Output Buffer Full Status bit
1 = The output buffer still holds a previously written word
0 = The output buffer has been read

bit 5 **IBOV:** Input Buffer Overflow Detect bit
1 = A write occurred when a previously input word has not been read (must be cleared in software)
0 = No overflow occurred

bit 4 **PSPMODE:** Parallel Slave Port Mode Select bit
1 = Parallel Slave Port mode
0 = General Purpose I/O mode

bit 3-0 **Unimplemented:** Read as ‘0’

FIGURE 11-3: PARALLEL SLAVE PORT WRITE WAVEFORMS

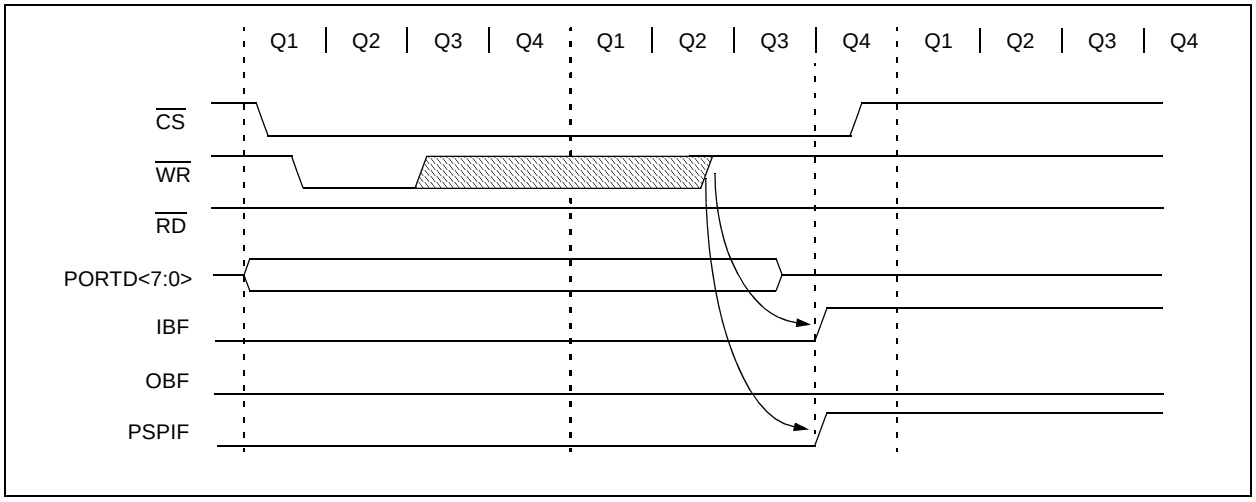

FIGURE 11-4: PARALLEL SLAVE PORT READ WAVEFORMS

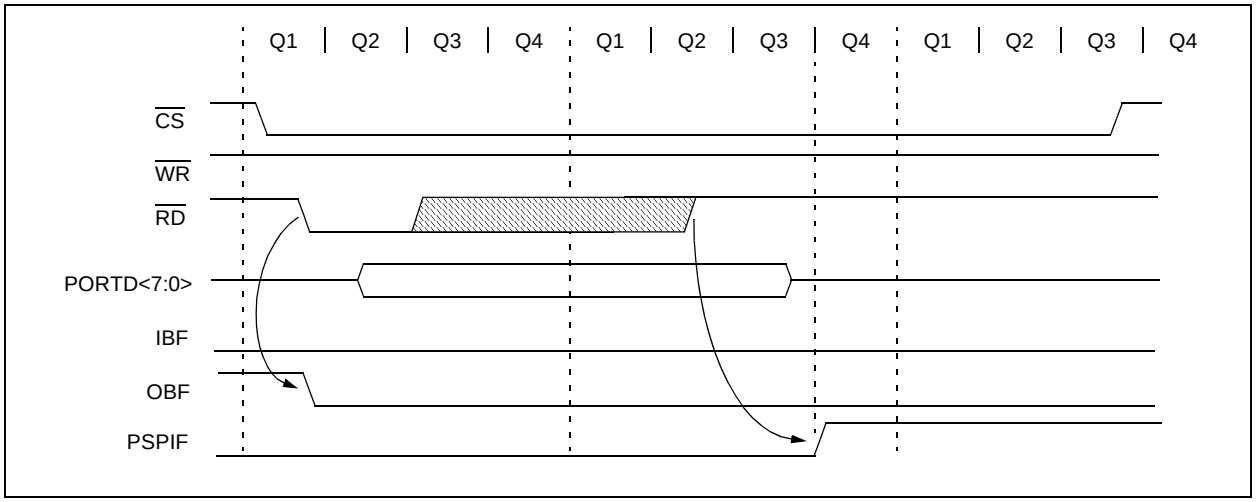

TABLE 11-19: REGISTERS ASSOCIATED WITH PARALLEL SLAVE PORT

Name	Bit 7	Bit 6	Bit 5	Bit 4	Bit 3	Bit 2	Bit 1	Bit 0	Reset Values on page
PORTD	RD7	RD6	RD5	RD4	RD3	RD2	RD1	RD0	60
LATD	LATD7	LATD6	LATD5	LATD4	LATD3	LATD2	LATD1	LATD0	60
TRISD	TRISD7	TRISD6	TRISD5	TRISD4	TRISD3	TRISD2	TRISD1	TRISD0	60
PORTE	RE7	RE6	RE5	RE4	RE3	RE2	RE1	RE0	60
LATE	LATE7	LATE6	LATE5	LATE4	LATE3	LATE2	LATE1	LATE0	60
TRISE	TRISE7	TRISE6	TRISE5	TRISE4	TRISE3	TRISE2	TRISE1	TRISE0	60
PSPCON	IBF	OBF	IBOV	PSPMODE	—	—	—	—	59
INTCON	GIE/GIEH	PEIE/GIEL	TMR0IE	INT0IE	RBIE	TMR0IF	INT0IF	RBIF	57
PIR1	PSPIF	ADIF	RC1IF	TX1IF	SSP1IF	CCP1IF	TMR2IF	TMR1IF	60
PIE1	PSPIE	ADIE	RC1IE	TX1IE	SSP1IE	CCP1IE	TMR2IE	TMR1IE	60
IPR1	PSPIP	ADIP	RC1IP	TX1IP	SSP1IP	CCP1IP	TMR2IP	TMR1IP	60

Legend: — = unimplemented, read as '0'. Shaded cells are not used by the Parallel Slave Port.

© 2008 Microchip Technology Inc.

12.0 TIMER0 MODULE

The Timer0 module incorporates the following features:

- Software selectable operation as a timer or counter in both 8-bit or 16-bit modes
- Readable and writable registers
- Dedicated 8-bit, software programmable prescaler
- Selectable clock source (internal or external)
- Edge select for external clock
- Interrupt-on-overflow

The T0CON register (Register 12-1) controls all aspects of the module's operation, including the prescale selection. It is both readable and writable.

A simplified block diagram of the Timer0 module in 8-bit mode is shown in Figure 12-1. Figure 12-2 shows a simplified block diagram of the Timer0 module in 16-bit mode.

REGISTER 12-1: T0CON: TIMER0 CONTROL REGISTER

R/W-1	R/W-1	R/W-1	R/W-1	R/W-1	R/W-1	R/W-1	R/W-1
TMR0ON	T08BIT	T0CS	T0SE	PSA	T0PS2	T0PS1	T0PS0
bit 7							bit 0

Legend:			
R = Readable bit	W = Writable bit	U = Unimplemented bit, read as '0'	
-n = Value at POR	'1' = Bit is set	'0' = Bit is cleared	x = Bit is unknown

bit 7 **TMR0ON:** Timer0 On/Off Control bit
1 = Enables Timer0
0 = Stops Timer0

bit 6 **T08BIT**: Timer0 8-bit/16-bit Control bit
1 = Timer0 is configured as an 8-bit timer/counter
0 = Timer0 is configured as a 16-bit timer/counter

bit 5 **T0CS**: Timer0 Clock Source Select bit
1 = Transition on T0CKI pin
0 = Internal instruction cycle clock (CLKO)

bit 4 **T0SE**: Timer0 Source Edge Select bit
1 = Increment on high-to-low transition on T0CKI pin
0 = Increment on low-to-high transition on T0CKI pin

bit 3 **PSA**: Timer0 Prescaler Assignment bit
1 = TImer0 prescaler is NOT assigned. Timer0 clock input bypasses prescaler.
0 = Timer0 prescaler is assigned. Timer0 clock input comes from prescaler output.

bit 2-0 **T0PS<2:0>**: Timer0 Prescaler Select bits
111 = 1:256 Prescale value
110 = 1:128 Prescale value
101 = 1:64 Prescale value
100 = 1:32 Prescale value
011 = 1:16 Prescale value
010 = 1:8 Prescale value
001 = 1:4 Prescale value
000 = 1:2 Prescale value

12.1 Timer0 Operation

Timer0 can operate as either a timer or a counter; the mode is selected with the T0CS bit (T0CON<5>). In Timer mode (T0CS = 0), the module increments on every clock by default unless a different prescaler value is selected (see **Section 12.3 "Prescaler"**). If the TMR0 register is written to, the increment is inhibited for the following two instruction cycles. The user can work around this by writing an adjusted value to the TMR0 register.

The Counter mode is selected by setting the T0CS bit (= 1). In this mode, Timer0 increments either on every rising or falling edge of pin RA4/T0CKI. The incrementing edge is determined by the Timer0 Source Edge Select bit, T0SE (T0CON<4>); clearing this bit selects the rising edge. Restrictions on the external clock input are discussed below.

An external clock source can be used to drive Timer0; however, it must meet certain requirements to ensure that the external clock can be synchronized with the internal phase clock (TOSC). There is a delay between synchronization and the onset of incrementing the timer/counter.

12.2 Timer0 Reads and Writes in 16-bit Mode

TMR0H is not the actual high byte of Timer0 in 16-bit mode; it is actually a buffered version of the real high byte of Timer0 which is not directly readable nor writable (refer to Figure 12-2). TMR0H is updated with the contents of the high byte of Timer0 during a read of TMR0L. This provides the ability to read all 16 bits of Timer0 without having to verify that the read of the high and low byte were valid, due to a rollover between successive reads of the high and low byte.

Similarly, a write to the high byte of Timer0 must also take place through the TMR0H Buffer register. The high byte is updated with the contents of TMR0H when a write occurs to TMR0L. This allows all 16 bits of Timer0 to be updated at once.

FIGURE 12-1: TIMER0 BLOCK DIAGRAM (8-BIT MODE)

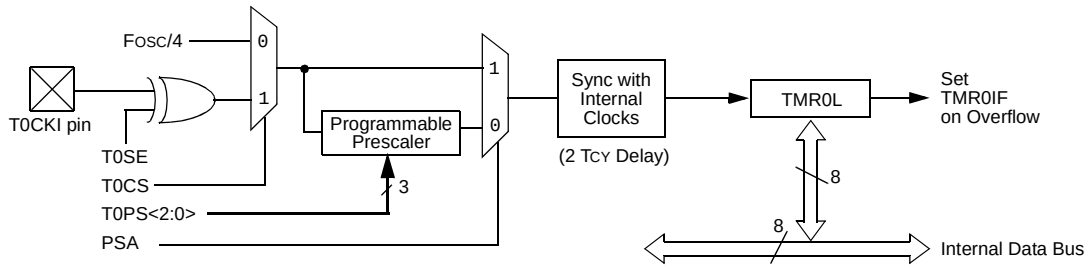

Note: Upon Reset, Timer0 is enabled in 8-bit mode with clock input from T0CKI max. prescale.

FIGURE 12-2: TIMER0 BLOCK DIAGRAM (16-BIT MODE)

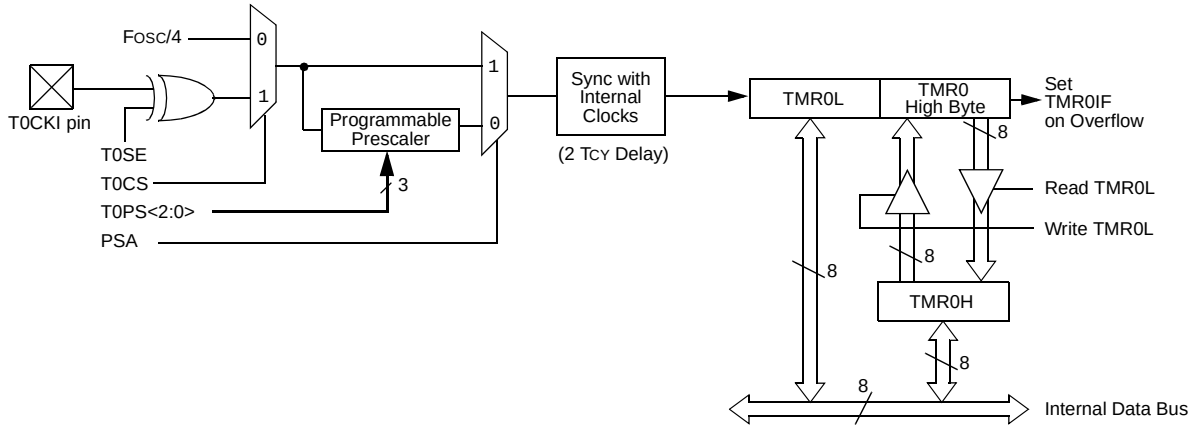

Note: Upon Reset, Timer0 is enabled in 8-bit mode with clock input from T0CKI max. prescale.

© 2008 Microchip Technology Inc.

12.3 Prescaler

An 8-bit counter is available as a prescaler for the Timer0 module. The prescaler is not directly readable or writable; its value is set by the PSA and T0PS<2:0> bits (T0CON<3:0>) which determine the prescaler assignment and prescale ratio.

Clearing the PSA bit assigns the prescaler to the Timer0 module. When it is assigned, prescale values from 1:2 through 1:256 in power-of-2 increments are selectable.

When assigned to the Timer0 module, all instructions writing to the TMR0 register (e.g., `CLRF TMR0`, `MOVWF TMR0`, `BSF TMR0`, etc.) clear the prescaler count.

> **Note:** Writing to TMR0 when the prescaler is assigned to Timer0 will clear the prescaler count, but will not change the prescaler assignment.

12.3.1 SWITCHING PRESCALER ASSIGNMENT

The prescaler assignment is fully under software control and can be changed “on-the-fly” during program execution.

12.4 Timer0 Interrupt

The TMR0 interrupt is generated when the TMR0 register overflows from FFh to 00h in 8-bit mode, or from FFFFh to 0000h in 16-bit mode. This overflow sets the TMR0IF flag bit. The interrupt can be masked by clearing the TMR0IE bit (INTCON<5>). Before re-enabling the interrupt, the TMR0IF bit must be cleared in software by the Interrupt Service Routine.

Since Timer0 is shut down in Sleep mode, the TMR0 interrupt cannot awaken the processor from Sleep.

TABLE 12-1: REGISTERS ASSOCIATED WITH TIMER0

Name	Bit 7	Bit 6	Bit 5	Bit 4	Bit 3	Bit 2	Bit 1	Bit 0	Reset Values on page
TMR0L	Timer0 Register Low Byte								58
TMR0H	Timer0 Register High Byte								58
INTCON	GIE/GIEH	PEIE/GIEL	TMR0IE	INT0IE	RBIE	TMR0IF	INT0IF	RBIF	57
T0CON	TMR0ON	T08BIT	T0CS	T0SE	PSA	T0PS2	T0PS1	T0PS0	58
TRISA	TRISA7(1)	TRISA6(1)	TRISA5	TRISA4	TRISA3	TRISA2	TRISA1	TRISA0	60

Legend: Shaded cells are not used by Timer0.

Note 1: PORTA<7:6> and their direction bits are individually configured as port pins based on various primary oscillator modes. When disabled, these bits read as ‘0’.

NOTES:

© 2008 Microchip Technology Inc.

13.0 TIMER1 MODULE

The Timer1 timer/counter module incorporates these features:

- Software selectable operation as a 16-bit timer or counter
- Readable and writable 8-bit registers (TMR1H and TMR1L)
- Selectable clock source (internal or external) with device clock or Timer1 oscillator internal options
- Interrupt-on-overflow
- Reset on CCP Special Event Trigger
- Device clock status flag (T1RUN)

A simplified block diagram of the Timer1 module is shown in Figure 13-1. A block diagram of the module's operation in Read/Write mode is shown in Figure 13-2.

The module incorporates its own low-power oscillator to provide an additional clocking option. The Timer1 oscillator can also be used as a low-power clock source for the microcontroller in power-managed operation.

Timer1 can also be used to provide Real-Time Clock (RTC) functionality to applications with only a minimal addition of external components and code overhead.

Timer1 is controlled through the T1CON Control register (Register 13-1). It also contains the Timer1 Oscillator Enable bit (T1OSCEN). Timer1 can be enabled or disabled by setting or clearing control bit, TMR1ON (T1CON<0>).

REGISTER 13-1: T1CON: TIMER1 CONTROL REGISTER

R/W-0	R/W-0	R/W-0	R/W-0	R/W-0	R/W-0	R/W-0	R/W-0
RD16	T1RUN	T1CKPS1	T1CKPS0	T1OSCEN	$\overline{\text{T1SYNC}}$	TMR1CS	TMR1ON
bit 7							bit 0

Legend:			
R = Readable bit	W = Writable bit	U = Unimplemented bit, read as '0'	
-n = Value at POR	'1' = Bit is set	'0' = Bit is cleared	x = Bit is unknown

bit 7 **RD16:** 16-Bit Read/Write Mode Enable bit
1 = Enables register read/write of Timer1 in one 16-bit operation
0 = Enables register read/write of Timer1 in two 8-bit operations

bit 6 **T1RUN:** Timer1 System Clock Status bit
1 = Device clock is derived from Timer1 oscillator
0 = Device clock is derived from another source

bit 5-4 **T1CKPS<1:0>:** Timer1 Input Clock Prescale Select bits
11 = 1:8 Prescale value
10 = 1:4 Prescale value
01 = 1:2 Prescale value
00 = 1:1 Prescale value

bit 3 **T1OSCEN:** Timer1 Oscillator Enable bit
1 = Timer1 oscillator is enabled
0 = Timer1 oscillator is shut off
The oscillator inverter and feedback resistor are turned off to eliminate power drain.

bit 2 **$\overline{\text{T1SYNC}}$:** Timer1 External Clock Input Synchronization Select bit
When TMR1CS = 1:
1 = Do not synchronize external clock input
0 = Synchronize external clock input
When TMR1CS = 0:
This bit is ignored. Timer1 uses the internal clock when TMR1CS = 0.

bit 1 **TMR1CS:** Timer1 Clock Source Select bit
1 = External clock from pin RC0/T1OSO/T13CKI (on the rising edge)
0 = Internal clock (Fosc/4)

bit 0 **TMR1ON:** Timer1 On bit
1 = Enables Timer1
0 = Stops Timer1

13.1 Timer1 Operation

Timer1 can operate in one of these modes:

- Timer
- Synchronous Counter
- Asynchronous Counter

The operating mode is determined by the clock select bit, TMR1CS (T1CON<1>). When TMR1CS is cleared (= 0), Timer1 increments on every internal instruction cycle (FOSC/4). When the bit is set, Timer1 increments on every rising edge of the Timer1 external clock input or the Timer1 oscillator, if enabled.

When Timer1 is enabled, the RC1/T1OSI and RC0/T1OSO/T13CKI pins become inputs. This means the values of TRISC<1:0> are ignored and the pins are read as '0'.

FIGURE 13-1: TIMER1 BLOCK DIAGRAM

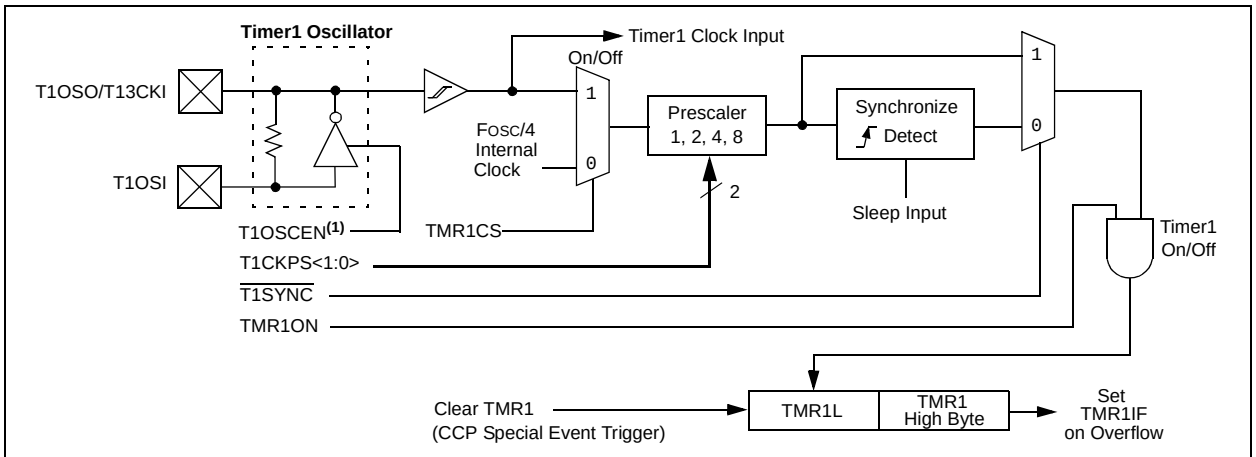

Note 1: When enable bit, T1OSCEN, is cleared, the inverter and feedback resistor are turned off to eliminate power drain.

FIGURE 13-2: TIMER1 BLOCK DIAGRAM (16-BIT READ/WRITE MODE)

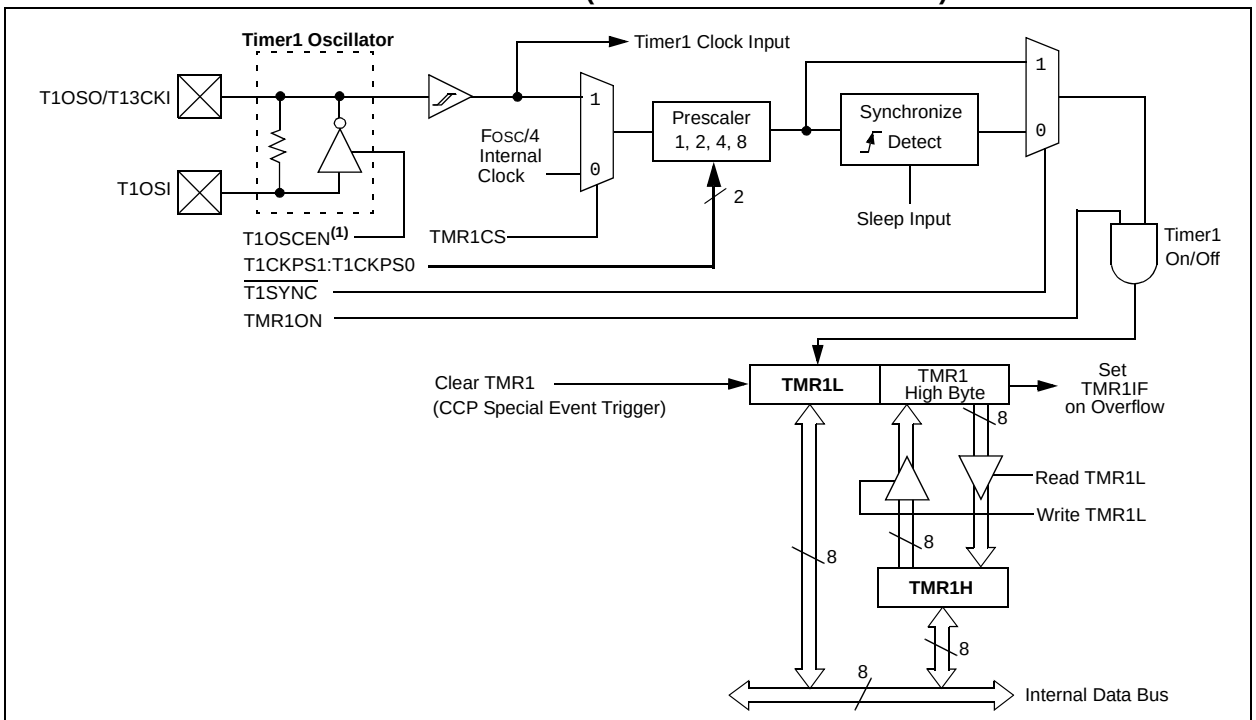

Note 1: When enable bit, T1OSCEN, is cleared, the inverter and feedback resistor are turned off to eliminate power drain.

© 2008 Microchip Technology Inc.

13.2 Timer1 16-bit Read/Write Mode

Timer1 can be configured for 16-bit reads and writes (see Figure 13-2). When the RD16 control bit (T1CON<7>) is set, the address for TMR1H is mapped to a buffer register for the high byte of Timer1. A read from TMR1L will load the contents of the high byte of Timer1 into the Timer1 high byte buffer. This provides the user with the ability to accurately read all 16 bits of Timer1 without having to determine whether a read of the high byte, followed by a read of the low byte, has become invalid due to a rollover between reads.

A write to the high byte of Timer1 must also take place through the TMR1H Buffer register. The Timer1 high byte is updated with the contents of TMR1H when a write occurs to TMR1L. This allows a user to write all 16 bits to both the high and low bytes of Timer1 at once.

The high byte of Timer1 is not directly readable or writable in this mode. All reads and writes must take place through the Timer1 High Byte Buffer register. Writes to TMR1H do not clear the Timer1 prescaler. The prescaler is only cleared on writes to TMR1L.

13.3 Timer1 Oscillator

An on-chip crystal oscillator circuit is incorporated between pins T1OSI (input) and T1OSO (amplifier output). It is enabled by setting the Timer1 Oscillator Enable bit, T1OSCEN (T1CON<3>). The oscillator is a low-power circuit rated for 32 kHz crystals. It will continue to run during all power-managed modes. The circuit for a typical LP oscillator is shown in Figure 13-3. Table 13-1 shows the capacitor selection for the Timer1 oscillator.

The user must provide a software time delay to ensure proper start-up of the Timer1 oscillator.

FIGURE 13-3: EXTERNAL COMPONENTS FOR THE TIMER1 LP OSCILLATOR

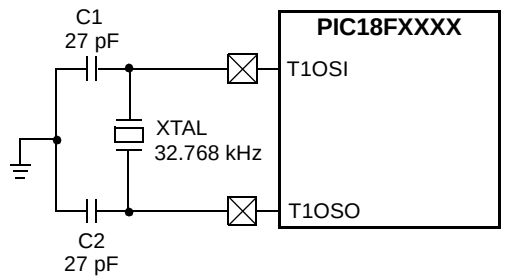

Note: See the Notes with Table 13-1 for additional information about capacitor selection.

TABLE 13-1: CAPACITOR SELECTION FOR THE TIMER OSCILLATOR(2,3,4)

Osc Type	Freq	C1	C2
LP	32 kHz	27 pF(1)	27 pF(1)

Note 1: Microchip suggests these values as a starting point in validating the oscillator circuit.

2: Higher capacitance increases the stability of the oscillator but also increases the start-up time.

3: Since each resonator/crystal has its own characteristics, the user should consult the resonator/crystal manufacturer for appropriate values of external components.

4: Capacitor values are for design guidance only.

13.3.1 USING TIMER1 AS A CLOCK SOURCE

The Timer1 oscillator is also available as a clock source in power-managed modes. By setting the clock select bits, SCS<1:0> (OSCCON<1:0>), to ‘01’, the device switches to SEC_RUN mode; both the CPU and peripherals are clocked from the Timer1 oscillator. If the IDLEN bit (OSCCON<7>) is cleared and a SLEEP instruction is executed, the device enters SEC_IDLE mode. Additional details are available in **Section 3.0 “Power-Managed Modes”**.

Whenever the Timer1 oscillator is providing the clock source, the Timer1 system clock status flag, T1RUN (T1CON<6>), is set. This can be used to determine the controller’s current clocking mode. It can also indicate the clock source being currently used by the Fail-Safe Clock Monitor. If the Clock Monitor is enabled and the Timer1 oscillator fails while providing the clock, polling the T1RUN bit will indicate whether the clock is being provided by the Timer1 oscillator or another source.

13.3.2 LOW-POWER TIMER1 OPTION

The Timer1 oscillator can operate at two distinct levels of power consumption based on device configuration. When the LPT1OSC Configuration bit is set, the Timer1 oscillator operates in a low-power mode. When LPT1OSC is not set, Timer1 operates at a higher power level. Power consumption for a particular mode is relatively constant, regardless of the device’s operating mode. The default Timer1 configuration is the higher power mode.

As the low-power Timer1 mode tends to be more sensitive to interference, high noise environments may cause some oscillator instability. The low-power option is, therefore, best suited for low noise applications where power conservation is an important design consideration.

13.3.3 TIMER1 OSCILLATOR LAYOUT CONSIDERATIONS

The Timer1 oscillator circuit draws very little power during operation. Due to the low-power nature of the oscillator, it may also be sensitive to rapidly changing signals in close proximity.

The oscillator circuit, shown in Figure 13-3, should be located as close as possible to the microcontroller. There should be no circuits passing within the oscillator circuit boundaries other than VSS or VDD.

If a high-speed circuit must be located near the Timer1 oscillator, a grounded guard ring around the oscillator circuit may be helpful when used on a single-sided PCB or in addition to a ground plane.

13.4 Timer1 Interrupt

The TMR1 register pair (TMR1H:TMR1L) increments from 0000h to FFFFh and rolls over to 0000h. The Timer1 interrupt, if enabled, is generated on overflow, which is latched in interrupt flag bit, TMR1IF (PIR1<0>). This interrupt can be enabled or disabled by setting or clearing the Timer1 Interrupt Enable bit, TMR1IE (PIE1<0>).

13.5 Resetting Timer1 Using the CCP Special Event Trigger

If any of the CCP modules are configured to use Timer1 and generate a Special Event Trigger in Compare mode (CCPxM<3:0>, this signal will reset Timer1. The trigger from the ECCP2 module will also start an A/D conversion if the A/D module is enabled (see **Section 17.3.4 “Special Event Trigger”** for more information).

The module must be configured as either a timer or a synchronous counter to take advantage of this feature. When used this way, the CCPRH:CCPRL register pair effectively becomes a period register for Timer1.

If Timer1 is running in Asynchronous Counter mode, this Reset operation may not work.

In the event that a write to Timer1 coincides with a Special Event Trigger, the write operation will take precedence.

Note:	The Special Event Triggers from the CCPx module will not set the TMR1IF interrupt flag bit (PIR1<0>).

13.6 Using Timer1 as a Real-Time Clock

Adding an external LP oscillator to Timer1 (such as the one described in **Section 13.3 “Timer1 Oscillator”** above) gives users the option to include RTC functionality to their applications. This is accomplished with an inexpensive watch crystal to provide an accurate time base and several lines of application code to calculate the time. When operating in Sleep mode and using a battery or supercapacitor as a power source, it can completely eliminate the need for a separate RTC device and battery backup.

The application code routine, `RTCisr`, shown in Example 13-1, demonstrates a simple method to increment a counter at one-second intervals using an Interrupt Service Routine. Incrementing the TMR1 register pair to overflow triggers the interrupt and calls the routine, which increments the seconds counter by one; additional counters for minutes and hours are incremented as the previous counter overflow.

Since the register pair is 16 bits wide, counting up to overflow the register directly from a 32.768 kHz clock would take 2 seconds. To force the overflow at the required one-second intervals, it is necessary to preload it; the simplest method is to set the MSb of TMR1H with a BSF instruction. Note that the TMR1L register is never preloaded or altered; doing so may introduce cumulative error over many cycles.

For this method to be accurate, Timer1 must operate in Asynchronous mode and the Timer1 overflow interrupt must be enabled (PIE1<0> = 1), as shown in the routine, `RTCinit`. The Timer1 oscillator must also be enabled and running at all times.

© 2008 Microchip Technology Inc.

EXAMPLE 13-1: IMPLEMENTING A REAL-TIME CLOCK USING A TIMER1 INTERRUPT SERVICE

```
RTCinit
            MOVLW   80h             ; Preload TMR1 register pair
            MOVWF   TMR1H           ; for 1 second overflow
            CLRF    TMR1L
            MOVLW   b'00001111'     ; Configure for external clock,
            MOVWF   T1CON           ; Asynchronous operation, external oscillator
            CLRF    secs            ; Initialize timekeeping registers
            CLRF    mins            ;
            MOVLW   .12
            MOVWF   hours
            BSF     PIE1, TMR1IE    ; Enable Timer1 interrupt
            RETURN
RTCisr
            BSF     TMR1H, 7        ; Preload for 1 sec overflow
            BCF     PIR1, TMR1IF    ; Clear interrupt flag
            INCF    secs, F         ; Increment seconds
            MOVLW   .59             ; 60 seconds elapsed?
            CPFSGT  secs
            RETURN                  ; No, done
            CLRF    secs            ; Clear seconds
            INCF    mins, F         ; Increment minutes
            MOVLW   .59             ; 60 minutes elapsed?
            CPFSGT  mins
            RETURN                  ; No, done
            CLRF    mins            ; clear minutes
            INCF    hours, F        ; Increment hours
            MOVLW   .23             ; 24 hours elapsed?
            CPFSGT  hours
            RETURN                  ; No, done
            CLRF    hours           ; Reset hours
            RETURN                  ; Done
```

TABLE 13-2: REGISTERS ASSOCIATED WITH TIMER1 AS A TIMER/COUNTER

Name	Bit 7	Bit 6	Bit 5	Bit 4	Bit 3	Bit 2	Bit 1	Bit 0	Reset Values on page
INTCON	GIE/GIEH	PEIE/GIEL	TMR0IE	INT0IE	RBIE	TMR0IF	INT0IF	RBIF	57
PIR1	PSPIF	ADIF	RC1IF	TX1IF	SSP1IF	CCP1IF	TMR2IF	TMR1IF	60
PIE1	PSPIE	ADIE	RC1IE	TX1IE	SSP1IE	CCP1IE	TMR2IE	TMR1IE	60
IPR1	PSPIP	ADIP	RC1IP	TX1IP	SSP1IP	CCP1IP	TMR2IP	TMR1IP	60
TMR1L	Timer1 Register Low Byte								58
TMR1H	Timer1 Register High Byte								58
T1CON	RD16	T1RUN	T1CKPS1	T1CKPS0	T1OSCEN	$\overline{\text{T1SYNC}}$	TMR1CS	TMR1ON	58

Legend: Shaded cells are not used by the Timer1 module.

NOTES:

© 2008 Microchip Technology Inc.

14.0 TIMER2 MODULE

The Timer2 timer module incorporates the following features:

- 8-bit Timer and Period registers (TMR2 and PR2, respectively)
- Readable and writable (both registers)
- Software programmable prescaler (1:1, 1:4 and 1:16)
- Software programmable postscaler (1:1 through 1:16)
- Interrupt on TMR2 to PR2 match
- Optional use as the shift clock for the MSSPx module

The module is controlled through the T2CON register (Register 14-1), which enables or disables the timer and configures the prescaler and postscaler. Timer2 can be shut off by clearing control bit, TMR2ON (T2CON<2>), to minimize power consumption.

A simplified block diagram of the module is shown in Figure 14-1.

14.1 Timer2 Operation

In normal operation, TMR2 is incremented from 00h on each clock (FOSC/4). A 4-bit counter/prescaler on the clock input gives direct input, divide-by-4 and divide-by-16 prescale options; these are selected by the prescaler control bits, T2CKPS<1:0> (T2CON<1:0>). The value of TMR2 is compared to that of the period register, PR2, on each clock cycle. When the two values match, the comparator generates a match signal as the timer output. This signal also resets the value of TMR2 to 00h on the next cycle and drives the output counter/postscaler (see **Section 14.2 "Timer2 Interrupt"**).

The TMR2 and PR2 registers are both directly readable and writable. The TMR2 register is cleared on any device Reset, while the PR2 register initializes at FFh. Both the prescaler and postscaler counters are cleared on the following events:

- a write to the TMR2 register
- a write to the T2CON register
- any device Reset (Power-on Reset, $\overline{\text{MCLR}}$ Reset, Watchdog Timer Reset or Brown-out Reset)

TMR2 is not cleared when T2CON is written.

REGISTER 14-1: T2CON: TIMER2 CONTROL REGISTER

U-0	R/W-0	R/W-0	R/W-0	R/W-0	R/W-0	R/W-0	R/W-0
—	T2OUTPS3	T2OUTPS2	T2OUTPS1	T2OUTPS0	TMR2ON	T2CKPS1	T2CKPS0
bit 7							bit 0

Legend:			
R = Readable bit	W = Writable bit	U = Unimplemented bit, read as '0'	
-n = Value at POR	'1' = Bit is set	'0' = Bit is cleared	x = Bit is unknown

bit 7 **Unimplemented:** Read as '0'

bit 6-3 **T2OUTPS<3:0>**: Timer2 Output Postscale Select bits
0000 = 1:1 Postscale
0001 = 1:2 Postscale
•
•
•
1111 = 1:16 Postscale

bit 2 **TMR2ON**: Timer2 On bit
1 = Timer2 is on
0 = Timer2 is off

bit 1-0 **T2CKPS<1:0>**: Timer2 Clock Prescale Select bits
00 = Prescaler is 1
01 = Prescaler is 4
1x = Prescaler is 16

14.2 Timer2 Interrupt

Timer2 also can generate an optional device interrupt. The Timer2 output signal (TMR2 to PR2 match) provides the input for the 4-bit output counter/postscaler. This counter generates the TMR2 match interrupt flag which is latched in TMR2IF (PIR1<1>). The interrupt is enabled by setting the TMR2 Match Interrupt Enable bit, TMR2IE (PIE1<1>).

A range of 16 postscale options (from 1:1 through 1:16 inclusive) can be selected with the postscaler control bits, T2OUTPS<3:0> (T2CON<6:3>).

14.3 Timer2 Output

The unscaled output of TMR2 is available primarily to the CCP modules, where it is used as a time base for operations in PWM mode.

Timer2 can be optionally used as the shift clock source for the MSSP module operating in SPI mode. Additional information is provided in **Section 19.0 "Master Synchronous Serial Port (MSSP) Module"**.

FIGURE 14-1: TIMER2 BLOCK DIAGRAM

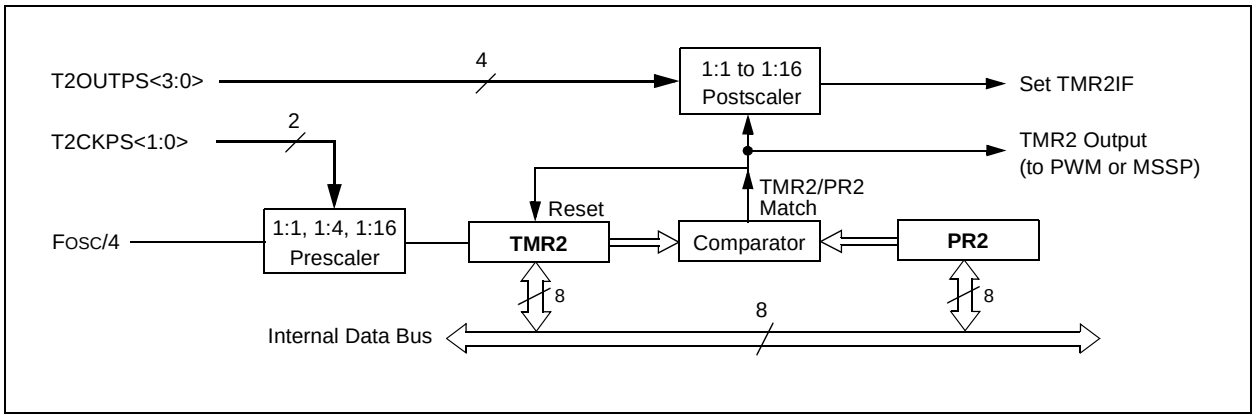

TABLE 14-1: REGISTERS ASSOCIATED WITH TIMER2 AS A TIMER/COUNTER

Name	Bit 7	Bit 6	Bit 5	Bit 4	Bit 3	Bit 2	Bit 1	Bit 0	Reset Values on page
INTCON	GIE/GIEH	PEIE/GIEL	TMR0IE	INT0IE	RBIE	TMR0IF	INT0IF	RBIF	57
PIR1	PSPIF	ADIF	RC1IF	TX1IF	SSP1IF	CCP1IF	TMR2IF	TMR1IF	60
PIE1	PSPIE	ADIE	RC1IE	TX1IE	SSP1IE	CCP1IE	TMR2IE	TMR1IE	60
IPR1	PSPIP	ADIP	RC1IP	TX1IP	SSP1IP	CCP1IP	TMR2IP	TMR1IP	60
TMR2	Timer2 Register								58
T2CON	—	T2OUTPS3	T2OUTPS2	T2OUTPS1	T2OUTPS0	TMR2ON	T2CKPS1	T2CKPS0	58
PR2	Timer2 Period Register								58

Legend: — = unimplemented, read as '0'. Shaded cells are not used by the Timer2 module.

© 2008 Microchip Technology Inc.

15.0 TIMER3 MODULE

The Timer3 timer/counter module incorporates these features:

- Software selectable operation as a 16-bit timer or counter
- Readable and writable 8-bit registers (TMR3H and TMR3L)
- Selectable clock source (internal or external) with device clock or Timer1 oscillator internal options
- Interrupt-on-overflow
- Module Reset on CCP Special Event Trigger

A simplified block diagram of the Timer3 module is shown in Figure 15-1. A block diagram of the module's operation in Read/Write mode is shown in Figure 15-2.

The Timer3 module is controlled through the T3CON register (Register 15-1). It also selects the clock source options for the CCP modules (see **Section 17.1.1 "CCP Modules and Timer Resources"** for more information).

REGISTER 15-1: T3CON: TIMER3 CONTROL REGISTER

R/W-0	R/W-0	R/W-0	R/W-0	R/W-0	R/W-0	R/W-0	R/W-0
RD16	T3CCP2	T3CKPS1	T3CKPS0	T3CCP1	$\overline{\text{T3SYNC}}$	TMR3CS	TMR3ON
bit 7							bit 0

Legend:			
R = Readable bit	W = Writable bit	U = Unimplemented bit, read as '0'	
-n = Value at POR	'1' = Bit is set	'0' = Bit is cleared	x = Bit is unknown

bit 7 **RD16:** 16-Bit Read/Write Mode Enable bit
1 = Enables register read/write of Timer3 in one 16-bit operation
0 = Enables register read/write of Timer3 in two 8-bit operations

bit 6, 3 **T3CCP<2:1>:** Timer3 and Timer1 to CCPx Enable bits
11 = Timer3 and Timer4 are the clock sources for ECCP1, ECCP2, ECCP3, CCP4 and CCP5
10 = Timer3 and Timer4 are the clock sources for ECCP3, CCP4 and CCP5;
Timer1 and Timer2 are the clock sources for ECCP1 and ECCP2
01 = Timer3 and Timer4 are the clock sources for ECCP2, ECCP3, CCP4 and CCP5;
Timer1 and Timer2 are the clock sources for ECCP1
00 = Timer1 and Timer2 are the clock sources for ECCP1, ECCP2, ECCP3, CCP4 and CCP5

bit 5-4 **T3CKPS<1:0>**: Timer3 Input Clock Prescale Select bits
11 = 1:8 Prescale value
10 = 1:4 Prescale value
01 = 1:2 Prescale value
00 = 1:1 Prescale value

bit 2 **$\overline{\text{T3SYNC}}$:** Timer3 External Clock Input Synchronization Control bit
(Not usable if the device clock comes from Timer1/Timer3.)
When TMR3CS = 1:
1 = Do not synchronize external clock input
0 = Synchronize external clock input
When TMR3CS = 0:
This bit is ignored. Timer3 uses the internal clock when TMR3CS = 0.

bit 1 **TMR3CS:** Timer3 Clock Source Select bit
1 = External clock input from Timer1 oscillator or T13CKI (on the rising edge after the first falling edge)
0 = Internal clock (FOSC/4)

bit 0 **TMR3ON:** Timer3 On bit
1 = Enables Timer3
0 = Stops Timer3

15.1 Timer3 Operation

Timer3 can operate in one of three modes:

- Timer
- Synchronous Counter
- Asynchronous Counter

The operating mode is determined by the clock select bit, TMR3CS (T3CON<1>). When TMR3CS is cleared (= 0), Timer3 increments on every internal instruction cycle (FOSC/4). When the bit is set, Timer3 increments on every rising edge of the Timer1 external clock input or the Timer1 oscillator, if enabled.

As with Timer1, the RC1/T1OSI and RC0/T1OSO/T13CKI pins become inputs when the Timer1 oscillator is enabled. This means the values of TRISC<1:0> are ignored and the pins are read as '0'.

FIGURE 15-1: TIMER3 BLOCK DIAGRAM

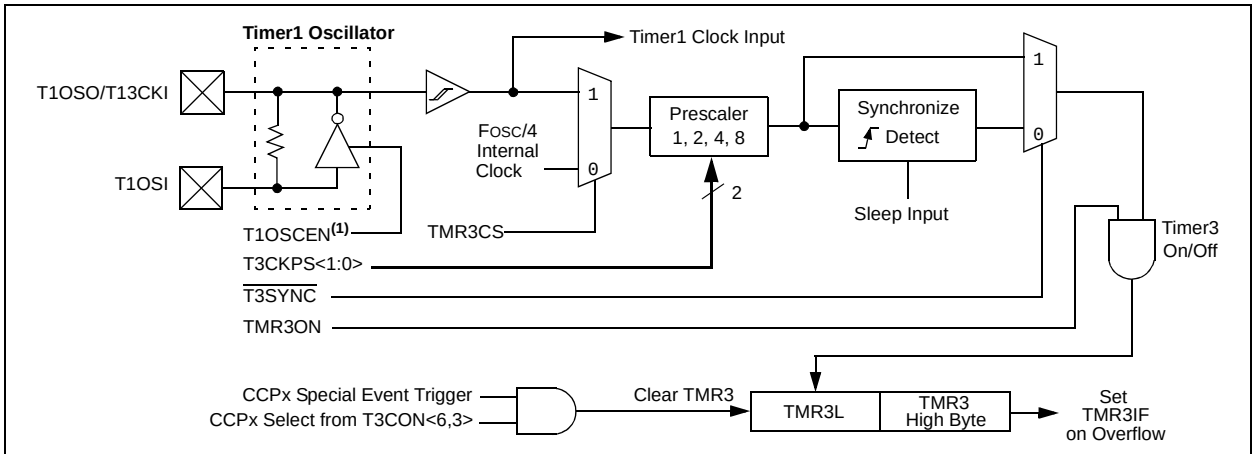

Note 1: When enable bit, T1OSCEN, is cleared, the inverter and feedback resistor are turned off to eliminate power drain.

FIGURE 15-2: TIMER3 BLOCK DIAGRAM (16-BIT READ/WRITE MODE)

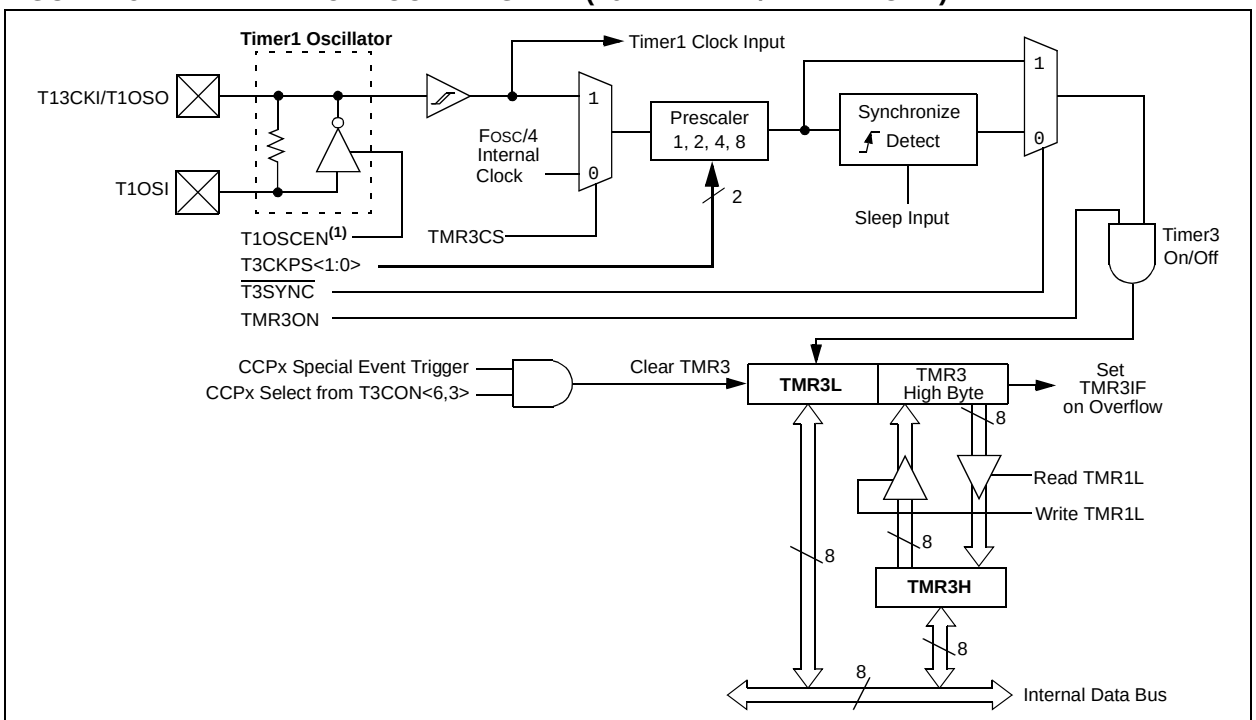

Note 1: When enable bit, T1OSCEN, is cleared, the inverter and feedback resistor are turned off to eliminate power drain.

© 2008 Microchip Technology Inc.

15.2 Timer3 16-bit Read/Write Mode

Timer3 can be configured for 16-bit reads and writes (see Figure 15-2). When the RD16 control bit (T3CON<7>) is set, the address for TMR3H is mapped to a buffer register for the high byte of Timer3. A read from TMR3L will load the contents of the high byte of Timer3 into the Timer3 High Byte Buffer register. This provides the user with the ability to accurately read all 16 bits of Timer3 without having to determine whether a read of the high byte, followed by a read of the low byte, has become invalid due to a rollover between reads.

A write to the high byte of Timer3 must also take place through the TMR3H Buffer register. The Timer3 high byte is updated with the contents of TMR3H when a write occurs to TMR3L. This allows a user to write all 16 bits to both the high and low bytes of Timer3 at once.

The high byte of Timer3 is not directly readable or writable in this mode. All reads and writes must take place through the Timer3 High Byte Buffer register.

Writes to TMR3H do not clear the Timer3 prescaler. The prescaler is only cleared on writes to TMR3L.

15.3 Using the Timer1 Oscillator as the Timer3 Clock Source

The Timer1 internal oscillator may be used as the clock source for Timer3. The Timer1 oscillator is enabled by setting the T1OSCEN (T1CON<3>) bit. To use it as the Timer3 clock source, the TMR3CS bit must also be set. As previously noted, this also configures Timer3 to increment on every rising edge of the oscillator source.

The Timer1 oscillator is described in **Section 13.0 “Timer1 Module”**.

15.4 Timer3 Interrupt

The TMR3 register pair (TMR3H:TMR3L) increments from 0000h to FFFFh and overflows to 0000h. The Timer3 interrupt, if enabled, is generated on overflow and is latched in interrupt flag bit, TMR3IF (PIR2<1>). This interrupt can be enabled or disabled by setting or clearing the Timer3 Interrupt Enable bit, TMR3IE (PIE2<1>).

15.5 Resetting Timer3 Using the CCP Special Event Trigger

If any of the CCP modules are configured to use Timer3 and to generate a Special Event Trigger in Compare mode (CCPxM<3:0> = `1011`), this signal will reset Timer3. ECCP2 can also start an A/D conversion if the A/D module is enabled (see **Section 17.3.4 “Special Event Trigger”** for more information).

The module must be configured as either a timer or synchronous counter to take advantage of this feature. When used this way, the CCPRxH:CCPRxL register pair effectively becomes a period register for Timer3.

If Timer3 is running in Asynchronous Counter mode, the Reset operation may not work.

In the event that a write to Timer3 coincides with a Special Event Trigger from a CCP module, the write will take precedence.

Note:	The Special Event Triggers from the CCPx module will not set the TMR3IF interrupt flag bit (PIR2<1>).

TABLE 15-1: REGISTERS ASSOCIATED WITH TIMER3 AS A TIMER/COUNTER

Name	Bit 7	Bit 6	Bit 5	Bit 4	Bit 3	Bit 2	Bit 1	Bit 0	Reset Values on page
INTCON	GIE/GIEH	PEIE/GIEL	TMR0IE	INT0IE	RBIE	TMR0IF	INT0IF	RBIF	57
PIR2	OSCFIF	CMIF	—	EEIF	BCL1IF	HLVDIF	TMR3IF	CCP2IF	60
PIE2	OSCFIE	CMIE	—	EEIE	BCL1IE	HLVDIE	TMR3IE	CCP2IE	60
IPR2	OSCFIP	CMIP	—	EEIP	BCL1IP	HLVDIP	TMR3IP	CCP2IP	60
TMR3L	Timer3 Register Low Byte								59
TMR3H	Timer3 Register High Byte								59
T1CON	RD16	T1RUN	T1CKPS1	T1CKPS0	T1OSCEN	$\overline{\text{T1SYNC}}$	TMR1CS	TMR1ON	58
T3CON	RD16	T3CCP2	T3CKPS1	T3CKPS0	T3CCP1	$\overline{\text{T3SYNC}}$	TMR3CS	TMR3ON	59

Legend: — = unimplemented, read as ‘`0`’. Shaded cells are not used by the Timer3 module.

NOTES:

© 2008 Microchip Technology Inc.

16.0 TIMER4 MODULE

The Timer4 timer module has the following features:

- 8-bit Timer register (TMR4)
- 8-bit Period register (PR4)
- Readable and writable (both registers)
- Software programmable prescaler (1:1, 1:4, 1:16)
- Software programmable postscaler (1:1 to 1:16)
- Interrupt on TMR4 match of PR4

Timer4 has a control register shown in Register 16-1. Timer4 can be shut off by clearing control bit, TMR4ON (T4CON<2>), to minimize power consumption. The prescaler and postscaler selection of Timer4 are also controlled by this register. Figure 16-1 is a simplified block diagram of the Timer4 module.

16.1 Timer4 Operation

Timer4 can be used as the PWM time base for the PWM mode of the CCP modules. The TMR4 register is readable and writable and is cleared on any device Reset. The input clock (FOSC/4) has a prescale option of 1:1, 1:4 or 1:16, selected by control bits T4CKPS<1:0> (T4CON<1:0>). The match output of TMR4 goes through a 4-bit postscaler (which gives a 1:1 to 1:16 scaling inclusive) to generate a TMR4 interrupt, latched in flag bit, TMR4IF (PIR3<3>).

The prescaler and postscaler counters are cleared when any of the following occurs:

- a write to the TMR4 register
- a write to the T4CON register
- any device Reset (Power-on Reset, $\overline{\text{MCLR}}$ Reset, Watchdog Timer Reset or Brown-out Reset)

TMR4 is not cleared when T4CON is written.

REGISTER 16-1: T4CON: TIMER4 CONTROL REGISTER

U-0	R/W-0	R/W-0	R/W-0	R/W-0	R/W-0	R/W-0	R/W-0
—	T4OUTPS3	T4OUTPS2	T4OUTPS1	T4OUTPS0	TMR4ON	T4CKPS1	T4CKPS0
bit 7							bit 0

Legend:			
R = Readable bit	W = Writable bit	U = Unimplemented bit, read as ‘0’	
-n = Value at POR	‘1’ = Bit is set	‘0’ = Bit is cleared	x = Bit is unknown

bit 7 **Unimplemented:** Read as ‘0’

bit 6-3 **T4OUTPS<3:0>:** Timer4 Output Postscale Select bits
0000 = 1:1 Postscale
0001 = 1:2 Postscale
•
•
•
1111 = 1:16 Postscale

bit 2 **TMR4ON**: Timer4 On bit
1 = Timer4 is on
0 = Timer4 is off

bit 1-0 **T4CKPS<1:0>**: Timer4 Clock Prescale Select bits
00 = Prescaler is 1
01 = Prescaler is 4
1x = Prescaler is 16

16.2 Timer4 Interrupt

The Timer4 module has an 8-bit Period register, PR4, which is both readable and writable. Timer4 increments from 00h until it matches PR4 and then resets to 00h on the next increment cycle. The PR4 register is initialized to FFh upon Reset.

16.3 Output of TMR4

The output of TMR4 (before the postscaler) is used only as a PWM time base for the CCP modules. It is not used as a baud rate clock for the MSSP, as is the Timer2 output.

FIGURE 16-1: TIMER4 BLOCK DIAGRAM

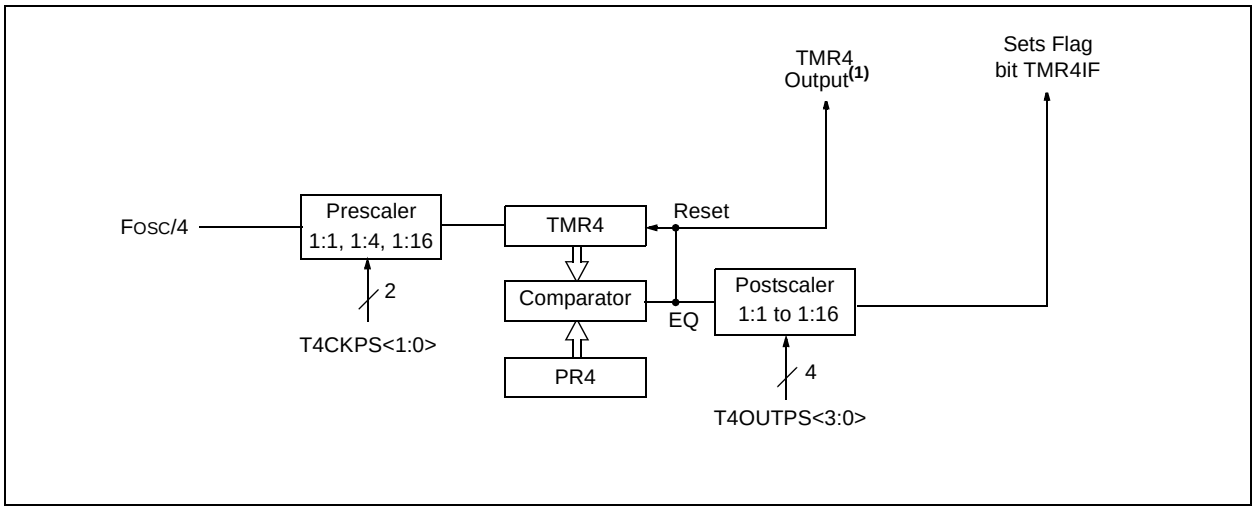

TABLE 16-1: REGISTERS ASSOCIATED WITH TIMER4 AS A TIMER/COUNTER

Name	Bit 7	Bit 6	Bit 5	Bit 4	Bit 3	Bit 2	Bit 1	Bit 0	Reset Values on page
INTCON	GIE/GIEH	PEIE/GIEL	TMR0IE	INT0IE	RBIE	TMR0IF	INT0IF	RBIF	57
IPR3	SSP2IP	BCL2IP	RC2IP	TX2IP	TMR4IP	CCP5IP	CCP4IP	CCP3IP	60
PIR3	SSP2IF	BCL2IF	RC2IF	TX2IF	TMR4IF	CCP5IF	CCP4IF	CCP3IF	60
PIE3	SSP2IE	BCL2IE	RC2IE	TX2IE	TMR4IE	CCP5IE	CCP4IE	CCP3IE	60
TMR4	Timer4 Register								61
T4CON	—	T4OUTPS3	T4OUTPS2	T4OUTPS1	T4OUTPS0	TMR4ON	T4CKPS1	T4CKPS0	61
PR4	Timer4 Period Register								61

Legend: x = unknown, u = unchanged, — = unimplemented, read as '0'. Shaded cells are not used by the Timer4 module.

© 2008 Microchip Technology Inc.

17.0 CAPTURE/COMPARE/PWM (CCP) MODULES

The PIC18F8722 family of devices all have a total of five CCP (Capture/Compare/PWM) modules. Two of these (CCP4 and CCP5) implement standard Capture, Compare and Pulse-Width Modulation (PWM) modes and are discussed in this section. The other three modules (ECCP1, ECCP2, ECCP3) implement standard Capture and Compare modes, as well as Enhanced PWM modes. These are discussed in **Section 18.0 "Enhanced Capture/Compare/PWM (ECCP) Module"**.

Each CCP/ECCP module contains a 16-bit register which can operate as a 16-bit Capture register, a 16-bit Compare register or a PWM Master/Slave Duty Cycle register. For the sake of clarity, all CCP module operations in the following sections are described with respect to CCP4, but are equally applicable to CCP5.

Capture and Compare operations described in this chapter apply to all standard and Enhanced CCP modules. The operations of PWM mode described in **Section 17.4 "PWM Mode"** apply to CCP4 and CCP5 only.

> **Note:** Throughout this section and **Section 18.0 "Enhanced Capture/Compare/PWM (ECCP) Module"**, references to register and bit names that may be associated with a specific CCP module are referred to generically by the use of 'x' or 'y' in place of the specific module number. Thus, "CCPxCON" might refer to the control register for CCP4 or CCP5, or ECCP1, ECCP2 or ECCP3. "CCPxCON" is used throughout these sections to refer to the module control register, regardless of whether the CCP module is a standard or enhanced implementation.

REGISTER 17-1: CCPxCON: CCPx CONTROL REGISTER (CCP4 AND CCP5 MODULES)

U-0	U-0	R/W-0	R/W-0	R/W-0	R/W-0	R/W-0	R/W-0
—	—	DCxB1	DCxB0	CCPxM3	CCPxM2	CCPxM1	CCPxM0
bit 7							bit 0

Legend:			
R = Readable bit	W = Writable bit	U = Unimplemented bit, read as '0'	
-n = Value at POR	'1' = Bit is set	'0' = Bit is cleared	x = Bit is unknown

bit 7-6 **Unimplemented:** Read as '0'

bit 5-4 **DCxB<1:0>**: PWM Duty Cycle bit 1 and bit 0 for CCP Module x

Capture mode:
Unused.

Compare mode:
Unused.

PWM mode:
These bits are the two Least Significant bits (bit 1 and bit 0) of the 10-bit PWM duty cycle. The eight Most Significant bits (DCx<9:2>) of the duty cycle are found in CCPRxL.

bit 3-0 **CCPxM<3:0>**: CCP Module x Mode Select bits

0000 = Capture/Compare/PWM disabled; resets CCPx module
0001 = Reserved
0010 = Compare mode, toggle output on match; CCPxIF bit is set
0011 = Reserved
0100 = Capture mode, every falling edge
0101 = Capture mode, every rising edge
0110 = Capture mode, every 4th rising edge
0111 = Capture mode, every 16th rising edge
1000 = Compare mode, initialize CCPx pin low; on compare match, force CCPx pin high; CCPxIF bit is set
1001 = Compare mode, initialize CCPx pin high; on compare match, force CCPx pin low; CCPxIF bit is set
1010 = Compare mode, generate software interrupt on compare match; CCPxIF bit is set; CCPx pin reflects I/O state
1011 = Compare mode, trigger special event; CCPxIF bit is set, CCPx pin is unaffected (For the effects of the trigger, see **Section 17.3.4 "Special Event Trigger"**.)
11xx = PWM mode

17.1 CCP Module Configuration

Each Capture/Compare/PWM module is associated with a control register (generically, CCPxCON) and a data register (CCPRx). The data register, in turn, is comprised of two 8-bit registers: CCPRxL (low byte) and CCPRxH (high byte). All registers are both readable and writable.

17.1.1 CCP MODULES AND TIMER RESOURCES

The CCP/ECCP modules utilize Timers 1, 2, 3 or 4, depending on the mode selected. Timer1 and Timer3 are available to modules in Capture or Compare modes, while Timer2 and Timer4 are available for modules in PWM mode.

TABLE 17-1: CCP MODE – TIMER RESOURCE

CCP Mode	Timer Resource
Capture	Timer1 or Timer3
Compare	Timer1 or Timer3
PWM	Timer2 or Timer4

The assignment of a particular timer to a module is determined by the Timer to CCP enable bits in the T3CON register (Register 15-1). Depending on the configuration selected, up to four timers may be active at once, with modules in the same configuration (Capture/Compare or PWM) sharing timer resources. The possible configurations are shown in Figure 17-1.

17.1.2 ECCP2 PIN ASSIGNMENT

The pin assignment for ECCP2 (Capture input, Compare and PWM output) can change, based on device configuration. The CCP2MX Configuration bit determines which pin ECCP2 is multiplexed to. By default, it is assigned to RC1 (CCP2MX = 1). If the Configuration bit is cleared, ECCP2 is multiplexed with RE7 in Microcontroller mode, or RE3 in all other modes.

Changing the pin assignment of ECCP2 does not automatically change any requirements for configuring the port pin. Users must always verify that the appropriate TRIS register is configured correctly for ECCP2 operation regardless of where it is located.

FIGURE 17-1: CCP AND TIMER INTERCONNECT CONFIGURATIONS

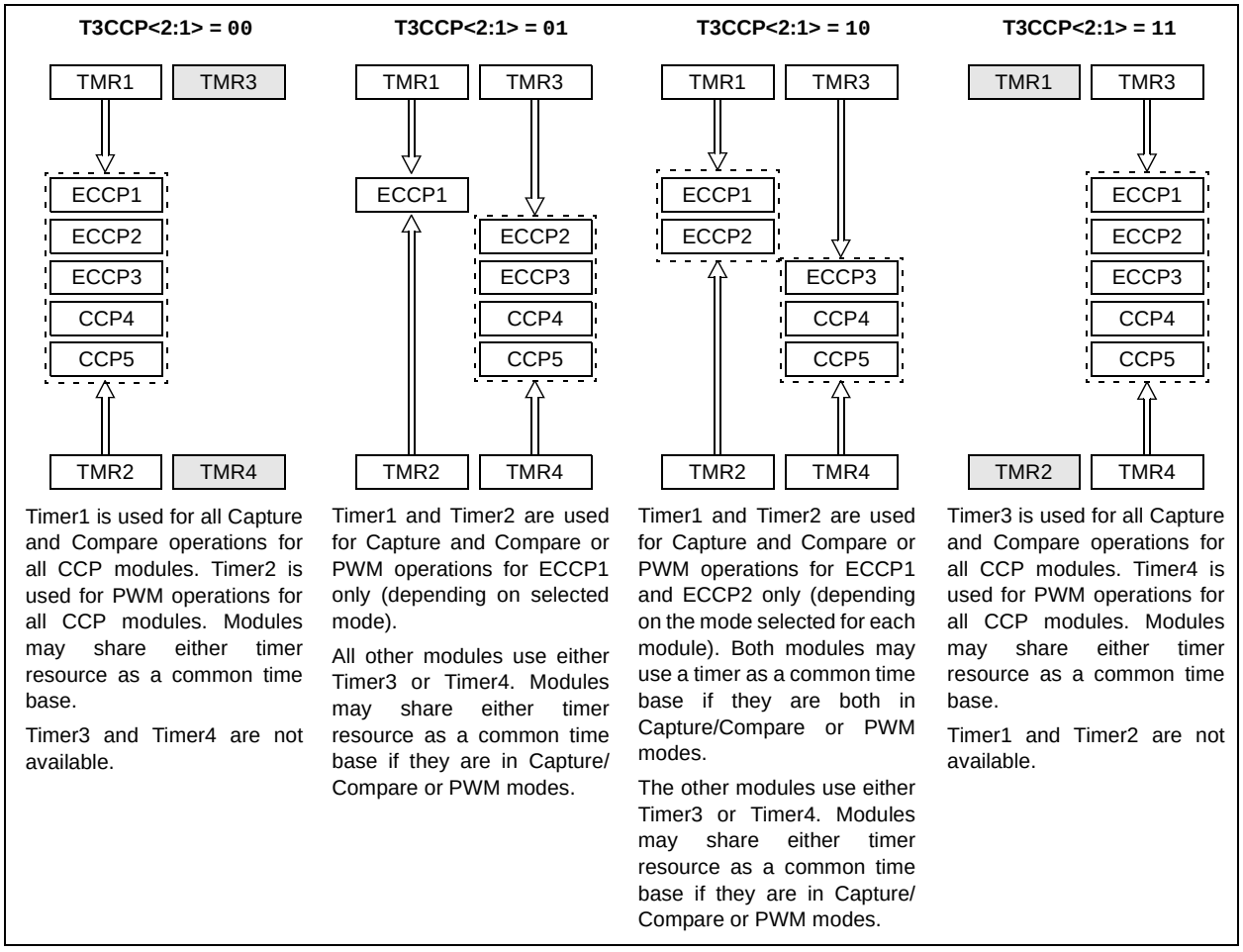

© 2008 Microchip Technology Inc.

17.2 Capture Mode

In Capture mode, the CCPRxH:CCPRxL register pair captures the 16-bit value of the TMR1 or TMR3 registers when an event occurs on the corresponding CCPx pin. An event is defined as one of the following:

- every falling edge
- every rising edge
- every 4th rising edge
- every 16th rising edge

The event is selected by the mode select bits, CCPxM<3:0> (CCPxCON<3:0>). When a capture is made, the interrupt request flag bit, CCPxIF, is set; it must be cleared in software. If another capture occurs before the value in the CCPRx registers is read, the old captured value is overwritten by the new captured value.

17.2.1 CCPx PIN CONFIGURATION

In Capture mode, the appropriate CCPx pin should be configured as an input by setting the corresponding TRIS direction bit.

Note:	If a CCPx pin is configured as an output, a write to the port can cause a capture condition.

17.2.2 TIMER1/TIMER3 MODE SELECTION

The timers that are to be used with the capture feature (Timer1 and/or Timer3) must be running in Timer mode or Synchronized Counter mode. In Asynchronous Counter mode, the capture operation will not work. The timer to be used with each CCP module is selected in the T3CON register (see **Section 17.1.1 “CCP Modules and Timer Resources”**).

17.2.3 SOFTWARE INTERRUPT

When the Capture mode is changed, a false capture interrupt may be generated. The user should keep the CCPxIE interrupt enable bit clear to avoid false interrupts. The interrupt flag bit, CCPxIF, should also be cleared following any such change in operating mode.

17.2.4 CCP PRESCALER

There are four prescaler settings in Capture mode; they are specified as part of the operating mode selected by the mode select bits (CCPxM<3:0>). Whenever the CCP module is turned off, or Capture mode is disabled, the prescaler counter is cleared. This means that any Reset will clear the prescaler counter.

Switching from one capture prescaler to another may generate an interrupt. Also, the prescaler counter will not be cleared; therefore, the first capture may be from a non-zero prescaler. Example 17-1 shows the recommended method for switching between capture prescalers. This example also clears the prescaler counter and will not generate the “false” interrupt.

EXAMPLE 17-1: CHANGING BETWEEN CAPTURE PRESCALERS (CCP5 SHOWN)

```
CLRF   CCP5CON     ; Turn CCP module off
MOVLW  NEW_CAPT_PS ; Load WREG with the
                   ; new prescaler mode
                   ; value and CCP ON
MOVWF  CCP5CON     ; Load CCP5CON with
                   ; this value
```

FIGURE 17-2: CAPTURE MODE OPERATION BLOCK DIAGRAM

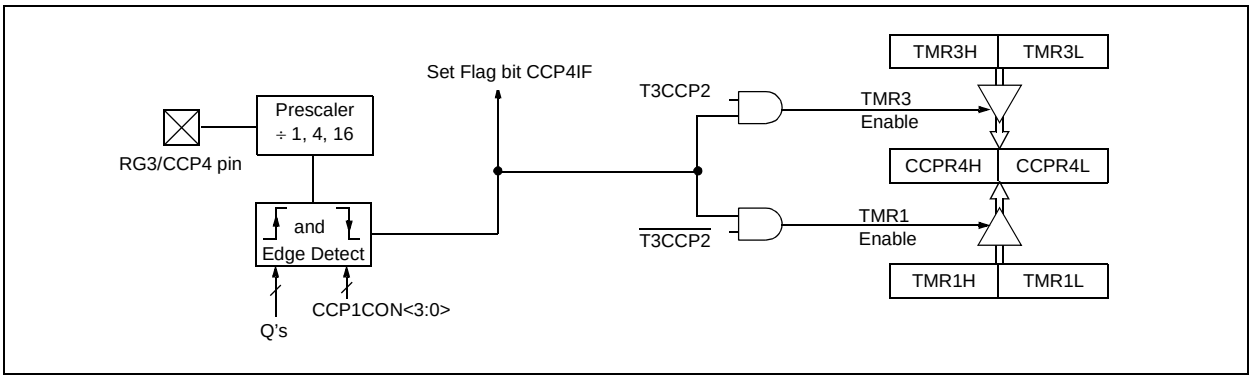

17.3 Compare Mode

In Compare mode, the 16-bit value of the CCPRx registers is constantly compared against either the TMR1 or TMR3 register pair value. When a match occurs, the CCPx pin can be:

- driven high
- driven low
- toggled (high-to-low or low-to-high)
- remain unchanged (that is, reflects the state of the I/O latch)

The action on the pin is based on the value of the mode select bits (CCPxM<3:0>). At the same time, the interrupt flag bit, CCPxIF, is set.

17.3.1 CCPx PIN CONFIGURATION

The user must configure the CCPx pin as an output by clearing the appropriate TRIS bit.

Note:	Clearing the CCPxCON register will force the compare output latch (depending on device configuration) to the default low level. This is not the port I/O data latch.

17.3.2 TIMER1/TIMER3 MODE SELECTION

Timer1 and/or Timer3 must be running in Timer mode or Synchronized Counter mode if the CCP module is using the compare feature. In Asynchronous Counter mode, the compare operation may not work.

17.3.3 SOFTWARE INTERRUPT MODE

When the Generate Software Interrupt mode is chosen (CCPxM<3:0> = `1010`), the corresponding CCPx pin is not affected. Only a CCP interrupt is generated, if enabled and the CCPxIE bit is set.

17.3.4 SPECIAL EVENT TRIGGER

All CCP modules are equipped with a Special Event Trigger. This is an internal hardware signal generated in Compare mode to trigger actions by other modules. The Special Event Trigger is enabled by selecting the Compare Special Event Trigger mode (CCPxM<3:0> = `1011`).

For all CCP modules, the Special Event Trigger resets the timer register pair for whichever timer resource is currently assigned as the module's time base. This allows the CCPRx registers to serve as a programmable period register for either timer.

The ECCP2 Special Event Trigger can also start an A/D conversion. In order to do this, the A/D converter must already be enabled.

FIGURE 17-3: COMPARE MODE OPERATION BLOCK DIAGRAM

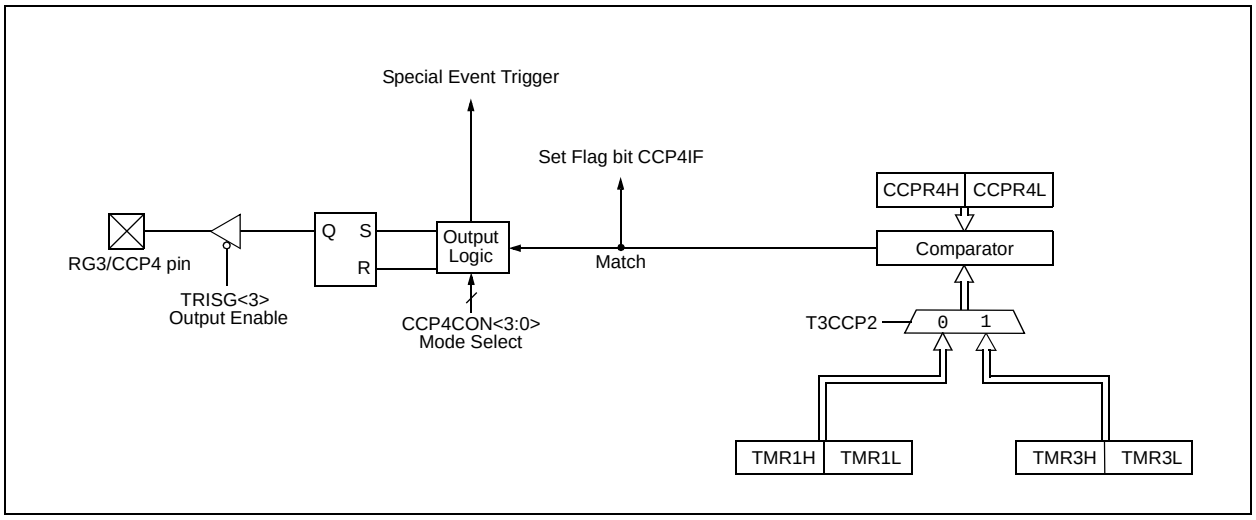

© 2008 Microchip Technology Inc.

TABLE 17-2: REGISTERS ASSOCIATED WITH CAPTURE, COMPARE, TIMER1 AND TIMER3

Name	Bit 7	Bit 6	Bit 5	Bit 4	Bit 3	Bit 2	Bit 1	Bit 0	Reset Values on page
INTCON	GIE/GIEH	PEIE/GIEL	TMR0IE	INT0IE	RBIE	TMR0IF	INT0IF	RBIF	57
RCON	IPEN	SBOREN	—	$\overline{\text{RI}}$	$\overline{\text{TO}}$	$\overline{\text{PD}}$	$\overline{\text{POR}}$	$\overline{\text{BOR}}$	56
PIR1	PSPIF	ADIF	RC1IF	TX1IF	SSP1IF	CCP1IF	TMR2IF	TMR1IF	60
PIE1	PSPIE	ADIE	RC1IE	TX1IE	SSP1IE	CCP1IE	TMR2IE	TMR1IE	60
IPR1	PSPIP	ADIP	RC1IP	TX1IP	SSP1IP	CCP1IP	TMR2IP	TMR1IP	60
PIR2	OSCFIF	CMIF	—	EEIF	BCL1IF	HLVDIF	TMR3IF	CCP2IF	60
PIE2	OSCFIE	CMIE	—	EEIE	BCL1IE	HLVDIE	TMR3IE	CCP2IE	60
IPR2	OSCFIP	CMIP	—	EEIP	BCL1IP	HLVDIP	TMR3IP	CCP2IP	60
PIR3	SSP2IF	BCL2IF	RC2IF	TX2IF	TMR4IF	CCP5IF	CCP4IF	CCP3IF	60
PIE3	SSP2IE	BCL2IE	RC2IE	TX2IE	TMR4IE	CCP5IE	CCP4IE	CCP3IE	60
IPR3	SSP2IP	BCL2IP	RC2IP	TX2IP	TMR4IP	CCP5IP	CCP4IP	CCP3IP	60
TRISB	TRISB7	TRISB6	TRISB5	TRISB4	TRISB3	TRISB2	TRISB1	TRISB0	60
TRISC	TRISC7	TRISC6	TRISC5	TRISC4	TRISC3	TRISC2	TRISC1	TRISC0	60
TRISE	TRISE7	TRISE6	TRISE5	TRISE4	TRISE3	TRISE2	TRISE1	TRISE0	60
TRISG	—	—	—	TRISG4	TRISG3	TRISG2	TRISG1	TRISG0	60
TRISH(1)	TRISH7	TRISH6	TRISH5	TRISH4	TRISH3	TRISH2	TRISH1	TRISH0	60
TMR1L	Timer1 Register Low Byte								58
TMR1H	Timer1 Register High Byte								58
T1CON	RD16	T1RUN	T1CKPS1	T1CKPS0	T1OSCEN	$\overline{\text{T1SYNC}}$	TMR1CS	TMR1ON	58
TMR3H	Timer3 Register High Byte								59
TMR3L	Timer3 Register Low Byte								59
T3CON	RD16	T3CCP2	T3CKPS1	T3CKPS0	T3CCP1	$\overline{\text{T3SYNC}}$	TMR3CS	TMR3ON	59
CCPR1L	Enhanced Capture/Compare/PWM Register 1 Low Byte								59
CCPR1H	Enhanced Capture/Compare/PWM Register 1 High Byte								59
CCP1CON	P1M1	P1M0	DC1B1	DC1B0	CCP1M3	CCP1M2	CCP1M1	CCP1M0	59
CCPR2L	Enhanced Capture/Compare/PWM Register 2 Low Byte								59
CCPR2H	Enhanced Capture/Compare/PWM Register 2 High Byte								59
CCP2CON	P2M1	P2M0	DC2B1	DC2B0	CCP2M3	CCP2M2	CCP2M1	CCP2M0	59
CCP3CON	P3M1	P3M0	DC3B1	DC3B0	CCP3M3	CCP3M2	CCP3M1	CCP3M0	59
CCP4CON	—	—	DC4B1	DC4B0	CCP4M3	CCP4M2	CCP4M1	CCP4M0	61
CCP5CON	—	—	DC5B1	DC5B0	CCP5M3	CCP5M2	CCP5M1	CCP5M0	61

Legend: — = unimplemented, read as '0'. Shaded cells are not used by Capture/Compare, Timer1 or Timer3.

Note 1: Implemented on 80-pin devices only.

17.4 PWM Mode

In Pulse-Width Modulation (PWM) mode, the CCPx pin produces up to a 10-bit resolution PWM output. Since the CCP4 and CCP5 pins are multiplexed with a PORTG data latch, the appropriate TRISG bit must be cleared to make the CCP4 or CCP5 pin an output.

Note:	Clearing the CCP4CON or CCP5CON register will force the RG3 or RG4 output latch (depending on device configuration) to the default low level. This is not the PORTG I/O data latch.

Figure 17-4 shows a simplified block diagram of the CCP module in PWM mode.

For a step-by-step procedure on how to set up a CCP module for PWM operation, see **Section 17.4.3 "Setup for PWM Operation"**.

FIGURE 17-4: SIMPLIFIED PWM BLOCK DIAGRAM

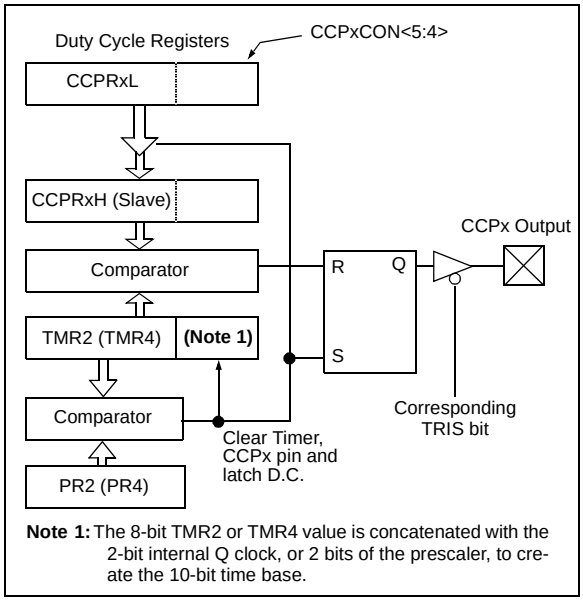

A PWM output (Figure 17-5) has a time base (period) and a time that the output stays high (duty cycle). The frequency of the PWM is the inverse of the period (1/period).

FIGURE 17-5: PWM OUTPUT

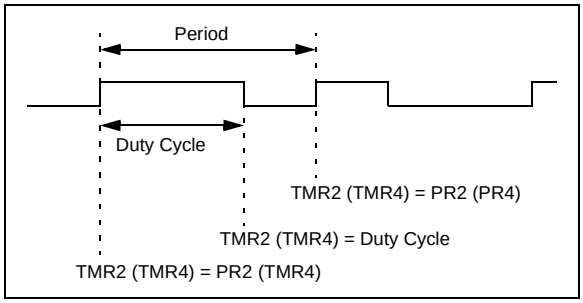

17.4.1 PWM PERIOD

The PWM period is specified by writing to the PR2 (PR4) register. The PWM period can be calculated using the following formula:

EQUATION 17-1:

$$\text{PWM Period} = [(PR2) + 1] \cdot 4 \cdot T_{OSC} \cdot (\text{TMR2 Prescale Value})$$

PWM frequency is defined as 1/[PWM period].

When TMR2 (TMR4) is equal to PR2 (PR4), the following three events occur on the next increment cycle:

- TMR2 (TMR4) is cleared
- The CCPx pin is set (exception: if PWM duty cycle = 0%, the CCPx pin will not be set)
- The PWM duty cycle is latched from CCPRxL into CCPRxH

Note:	The Timer2 and Timer 4 postscalers (see **Section 14.0 "Timer2 Module"** and **Section 16.0 "Timer4 Module"**) are not used in the determination of the PWM frequency. The postscaler could be used to have a servo update rate at a different frequency than the PWM output.

17.4.2 PWM DUTY CYCLE

The PWM duty cycle is specified by writing to the CCPRxL register and to the CCPxCON<5:4> bits. Up to 10-bit resolution is available. The CCPRxL contains the eight MSbs and the CCPxCON<5:4> contains the two LSbs. This 10-bit value is represented by CCPRxL:CCPxCON<5:4>. The following equation is used to calculate the PWM duty cycle in time:

EQUATION 17-2:

$$\text{PWM Duty Cycle} = (CCPRxL{:}CCPxCON\langle 5{:}4\rangle) \cdot T_{OSC} \cdot (\text{TMR2 Prescale Value})$$

CCPRxL and CCPxCON<5:4> can be written to at any time, but the duty cycle value is not latched into CCPRxH until after a match between PR2 (PR4) and TMR2 (TMR4) occurs (i.e., the period is complete). In PWM mode, CCPRxH is a read-only register.

© 2008 Microchip Technology Inc.

The CCPRxH register and a 2-bit internal latch are used to double-buffer the PWM duty cycle. This double-buffering is essential for glitchless PWM operation.

When the CCPRxH and 2-bit latch match TMR2 (TMR4), concatenated with an internal 2-bit Q clock or 2 bits of the TMR2 (TMR4) prescaler, the CCPx pin is cleared.

The maximum PWM resolution (bits) for a given PWM frequency is given by the equation:

EQUATION 17-3:

$$\text{PWM Resolution (max)} = \frac{\log\left(\frac{F_{OSC}}{F_{PWM}}\right)}{\log(2)} \text{bits}$$

Note:	If the PWM duty cycle value is longer than the PWM period, the CCPx pin will not be cleared.

17.4.3 SETUP FOR PWM OPERATION

The following steps should be taken when configuring the CCP module for PWM operation:

1. Set the PWM period by writing to the PR2 (PR4) register.
2. Set the PWM duty cycle by writing to the CCPRxL register and CCPxCON<5:4> bits.
3. Make the CCPx pin an output by clearing the appropriate TRIS bit.
4. Set the TMR2 (TMR4) prescale value, then enable Timer2 (Timer4) by writing to T2CON (T4CON).
5. Configure the CCPx module for PWM operation.

TABLE 17-3: EXAMPLE PWM FREQUENCIES AND RESOLUTIONS AT 40 MHz

PWM Frequency	2.44 kHz	9.77 kHz	39.06 kHz	156.25 kHz	312.50 kHz	416.67 kHz
Timer Prescaler (1, 4, 16)	16	4	1	1	1	1
PR2 Value	FFh	FFh	FFh	3Fh	1Fh	17h
Maximum Resolution (bits)	10	10	10	8	7	6.58

TABLE 17-4: REGISTERS ASSOCIATED WITH PWM, TIMER2 AND TIMER4

Name	Bit 7	Bit 6	Bit 5	Bit 4	Bit 3	Bit 2	Bit 1	Bit 0	Reset Values on page
INTCON	GIE/GIEH	PEIE/GIEL	TMR0IE	INT0IE	RBIE	TMR0IF	INT0IF	RBIF	57
RCON	IPEN	SBOREN	—	$\overline{\text{RI}}$	$\overline{\text{TO}}$	$\overline{\text{PD}}$	$\overline{\text{POR}}$	$\overline{\text{BOR}}$	56
PIR1	PSPIF	ADIF	RC1IF	TX1IF	SSP1IF	CCP1IF	TMR2IF	TMR1IF	60
PIE1	PSPIE	ADIE	RC1IE	TX1IE	SSP1IE	CCP1IE	TMR2IE	TMR1IE	60
IPR1	PSPIP	ADIP	RC1IP	TX1IP	SSP1IP	CCP1IP	TMR2IP	TMR1IP	60
PIR3	SSP2IF	BCL2IF	RC2IF	TX2IF	TMR4IF	CCP5IF	CCP4IF	CCP3IF	60
PIE3	SSP2IE	BCL2IF	RC2IE	TX2IE	TMR4IE	CCP5IE	CCP4IE	CCP3IE	60
IPR3	SSP2IP	BCL2IP	RC2IP	TX2IP	TMR4IP	CCP5IP	CCP4IP	CCP3IP	60
TMR2	Timer2 Register								58
PR2	Timer2 Period Register								58
T2CON	—	T2OUTPS3	T2OUTPS2	T2OUTPS1	T2OUTPS0	TMR2ON	T2CKPS1	T2CKPS0	58
TMR4	Timer4 Register								61
PR4	Timer4 Period Register								61
T4CON	—	T4OUTPS3	T4OUTPS2	T4OUTPS1	T4OUTPS0	TMR4ON	T4CKPS1	T4CKPS0	61
CCPR1L	Enhanced Capture/Compare/PWM Register 1 Low Byte								59
CCPR1H	Enhanced Capture/Compare/PWM Register 1 High Byte								59
CCPR2L	Enhanced Capture/Compare/PWM Register 2 Low Byte								59
CCPR2H	Enhanced Capture/Compare/PWM Register 2 High Byte								59
CCP4CON	—	—	DC4B1	DC4B0	CCP4M3	CCP4M2	CCP4M1	CCP4M0	61
CCP5CON	—	—	DC5B1	DC5B0	CCP5M3	CCP5M2	CCP5M1	CCP5M0	61

Legend: — = unimplemented, read as ‘0’. Shaded cells are not used by PWM, Timer2 or Timer4.

© 2008 Microchip Technology Inc.

18.0 ENHANCED CAPTURE/ COMPARE/PWM (ECCP) MODULE

In the PIC18F8722 family of devices, ECCP1, ECCP2 and ECCP3 are implemented as a standard CCP module with Enhanced PWM capabilities. These include the provision for 2 or 4 output channels, user selectable polarity, dead-band control and automatic shutdown and restart. The enhanced features are discussed in detail in **Section 18.4 "Enhanced PWM Mode"**. Capture, Compare and single-output PWM functions of the ECCP module are the same as described for the standard CCP module.

The control register for the Enhanced CCP modules is shown in Register 18-1. It differs from the CCPxCON registers discussed in **Section 17.0 "Capture/ Compare/PWM (CCP) Modules"** in that the two Most Significant bits are implemented to control PWM functionality. In addition to the expanded range of modes available through the Enhanced CCPxCON register, the ECCP modules each have two additional features associated with Enhanced PWM operation and auto-shutdown features. They are:

- ECCPxDEL (Dead-Band Delay)
- ECCPxAS (Auto-Shutdown Configuration)

REGISTER 18-1: CCPxCON: ENHANCED CCPx CONTROL REGISTER (ECCP1, ECCP2, ECCP3)

R/W-0	R/W-0	R/W-0	R/W-0	R/W-0	R/W-0	R/W-0	R/W-0
PxM1	PxM0	DCxB1	DCxB0	CCPxM3	CCPxM2	CCPxM1	CCPxM0
bit 7							bit 0

Legend:			
R = Readable bit	W = Writable bit	U = Unimplemented bit, read as '0'	
-n = Value at POR	'1' = Bit is set	'0' = Bit is cleared	x = Bit is unknown

bit 7-6 **PxM1:PxM0:** Enhanced PWM Output Configuration bits

If CCPxM<3:2> = 00, 01, 10:
xx = PxA assigned as Capture/Compare input/output; PxB, PxC, PxD assigned as port pins
If CCPxM<3:2> = 11:
00 = Single output: PxA modulated; PxB, PxC, PxD assigned as port pins
01 = Full-bridge output forward: P1D modulated; P1A active; P1B, P1C inactive
10 = Half-bridge output: P1A, P1B modulated with dead-band control; P1C, P1D assigned as port pins
11 = Full-bridge output reverse: P1B modulated; P1C active; P1A, P1D inactive

bit 5-4 **DCxB<1:0>:** PWM Duty Cycle bit 1 and bit 0

Capture mode:
Unused.
Compare mode:
Unused.
PWM mode:
These bits are the two LSbs of the 10-bit PWM duty cycle. The eight MSbs of the duty cycle are found in CCPRxL.

bit 3-0 **CCPxM3:CCPxM0**: Enhanced CCP Mode Select bits

0000 = Capture/Compare/PWM off (resets ECCPx module)
0001 = Reserved
0010 = Compare mode: toggle output on match
0011 = Capture mode
0100 = Capture mode: every falling edge
0101 = Capture mode: every rising edge
0110 = Capture mode: every 4th rising edge
0111 = Capture mode: every 16th rising edge
1000 = Compare mode: initialize ECCPx pin low; set output on compare match (set CCPxIF)
1001 = Compare mode: initialize ECCPx pin high; clear output on compare match (set CCPxIF)
1010 = Compare mode: generate software interrupt only; ECCPx pin reverts to I/O state
1011 = Compare mode: trigger special event (ECCP resets TMR1 or TMR3, sets CCPxIF bit; ECCP2 trigger starts A/D conversion if A/D module is enabled)
1100 = PWM mode: PxA, PxC active-high; PxB, PxD active-high
1101 = PWM mode: PxA, PxC active-high; PxB, PxD active-low
1110 = PWM mode: PxA, PxC active-low; PxB, PxD active-high
1111 = PWM mode: PxA, PxC active-low; PxB, PxD active-low

18.1 ECCP Outputs and Configuration

Each of the Enhanced CCP modules may have up to four PWM outputs, depending on the selected operating mode. These outputs, designated PxA through PxD, are multiplexed with various I/O pins. Some ECCPx pin assignments are constant, while others change based on device configuration. For those pins that do change, the controlling bits are:

- CCP2MX Configuration bit (CONFIG3H<0>)
- ECCPMX Configuration bit (CONFIG3H<1>)
- Program Memory mode (set by Configuration bits, CONFIG3L<1:0>)

The pin assignments for the Enhanced CCP modules are summarized in Table 18-1, Table 18-2 and Table 18-3. To configure the I/O pins as PWM outputs, the proper PWM mode must be selected by setting the PxMx and CCPxMx bits (CCPxCON<7:6> and <3:0>, respectively). The appropriate TRIS direction bits for the corresponding port pins must also be set as outputs.

18.1.1 USE OF CCP4 AND CCP5 WITH ECCP1 AND ECCP3

Only the ECCP2 module has four dedicated output pins available for use. Assuming that the I/O ports or other multiplexed functions on those pins are not needed, they may be used whenever needed without interfering with any other CCP module.

ECCP1 and ECCP3, on the other hand, only have three dedicated output pins: ECCPx/P3A, PxB and PxC. Whenever these modules are configured for Quad PWM mode, the pin used for CCP4 or CCP5 takes priority over the D output pins for ECCP3 and ECCP1, respectively.

18.1.2 ECCP MODULE OUTPUTS, PROGRAM MEMORY MODES AND EMB ADDRESS BUS WIDTH

For PIC18F8527/8622/8627/8722 devices, the program memory mode of the device (**Section 7.2 “Address and Data Width”** and **Section 7.4 “Program Memory Modes and the External Memory Bus”**) impacts both pin multiplexing and the operation of the module.

The ECCP2 input/output (ECCP2/P2A) can be multiplexed to one of three pins. By default, this is RC1 for all devices; in this case, the default is in effect when CCP2MX is set and the device is operating in Microcontroller mode. With PIC18F8527/8622/8627/8722 devices, three other options exist. When CCP2MX is not set (= `0`) and the device is in Microcontroller mode, ECCP2/P2A is multiplexed to RE7; in all other program memory modes, it is multiplexed to RB3.

Another option is for ECCPMX to be set while the device is operating in one of the three other program memory modes. In this case, ECCP1 and ECCP3 operate as compatible (i.e., single output) CCP modules. The pins used by their other outputs (PxB through PxD) are available for other multiplexed functions. ECCP2 continues to operate as an Enhanced CCP module regardless of the program memory mode.

The final option is that the ABW<1:0> Configuration bits can be used to select 8, 12, 16 or 20-bit EMB addressing. Pins not assigned to EMB address pins are available for peripheral or port functions.

© 2008 Microchip Technology Inc.

TABLE 18-1: PIN CONFIGURATIONS FOR ECCP1

ECCP Mode	CCP1CON Configuration	RC2	RE6	RE5	RG4	RH7	RH6
PIC18F6527/6622/6627/6722 Devices:							
Compatible CCP	00xx 11xx	ECCP1	RE6	RE5	RG4/CCP5	N/A	N/A
Dual PWM	10xx 11xx	P1A	P1B	RE5	RG4/CCP5	N/A	N/A
Quad PWM	x1xx 11xx	P1A	P1B	P1C	CCP5/P1D(1)	N/A	N/A
PIC18F8527/8622/8627/8722 Devices, ECCPMX = 1, Microcontroller mode:							
Compatible CCP	00xx 11xx	ECCP1	RE6	RE5	RG4/CCP5	RH7/AN15	RH6/AN14
Dual PWM	10xx 11xx	P1A	P1B	RE5	RG4/CCP5	RH7/AN15	RH6/AN14
Quad PWM	x1xx 11xx	P1A	P1B	P1C	CCP5/P1D(1)	RH7/AN15	RH6/AN14
PIC18F8527/8622/8627/8722 Devices, ECCPMX = 0, Microcontroller mode:							
Compatible CCP	00xx 11xx	ECCP1	RE6	RE5	RG4/CCP5	RH7/AN15	RH6/AN14
Dual PWM	10xx 11xx	P1A	RE6	RE5	RG4/CCP5	P1B	RH6/AN14
Quad PWM	x1xx 11xx	P1A	RE6	RE5	CCP5/P1D(1)	P1B	P1C
PIC18F8527/8622/8627/8722 Devices, ECCPMX = 1, all other Program Memory modes:							
Compatible CCP	00xx 11xx	ECCP1	AD14(2)	AD13(2)	RG4/CCP5	RH7/AN15	RH6/AN14
Dual PWM	10xx 11xx	P1A	P1B/AD14(2)	AD13(2)	RG4/CCP5	RH7/AN15	RH6/AN14
Quad PWM	x1xx 11xx	P1A	P1B/AD14(2)	P1C/AD13(2)	CCP5/P1D(1)	RH7/AN15	RH6/AN14
PIC18F8527/8622/8627/8722 Devices, ECCPMX = 0, all other Program Memory modes:							
Compatible CCP	00xx 11xx	ECCP1	AD14(2)	AD13(2)	RG4/CCP5	RH7/AN15	RH6/AN14
Dual PWM	10xx 11xx	P1A	AD14(2)	AD13(2)	RG4/CCP5	P1B	RH6/AN14
Quad PWM	x1xx 11xx	P1A	AD14(2)	AD13(2)	CCP5/P1D(1)	P1B	P1C

Legend: x = Don't care, N/A = Not available. Shaded cells indicate pin assignments not used by ECCP1 in a given mode.

Note 1: With ECCP1 in Quad PWM mode, the CCP5 module's output overrides P1D.

2: The EMB address bus width will determine whether the pin will perform an EMB or port/peripheral function.

TABLE 18-2: PIN CONFIGURATIONS FOR ECCP2

ECCP Mode	CCP2CON Configuration	RB3	RC1	RE7	RE2	RE1	RE0
PIC18F6527/6622/6627/6722 Devices, CCP2MX = 1:							
Compatible CCP	00xx 11xx	RB3/INT3	ECCP2	RE7	RE2	RE1	RE0
Dual PWM	10xx 11xx	RB3/INT3	P2A	RE7	P2B	RE1	RE0
Quad PWM	x1xx 11xx	RB3/INT3	P2A	RE7	P2B	P2C	P2D
PIC18F6527/6622/6627/6722 Devices CCP2MX = 0:							
Compatible CCP	00xx 11xx	RB3/INT3	RC1/T1OSI	ECCP2	RE2	RE1	RE0
Dual PWM	10xx 11xx	RB3/INT3	RC1/T1OSI	P2A	P2B	RE1	RE0
Quad PWM	x1xx 11xx	RB3/INT3	RC1/T1OSI	P2A	P2B	P2C	P2D
PIC18F8527/8622/8627/8722 Devices, CCP2MX = 1, Microcontroller mode:							
Compatible CCP	00xx 11xx	RB3/INT3	ECCP2	RE7	RE2	RE1	RE0
Dual PWM	10xx 11xx	RB3/INT3	P2A	RE7	P2B	RE1	RE0
Quad PWM	x1xx 11xx	RB3/INT3	P2A	RE7	P2B	P2C	P2D
PIC18F8527/8622/8627/8722 Devices, CCP2MX = 0, Microcontroller mode:							
Compatible CCP	00xx 11xx	RB3/INT3	RC1/T1OSI	ECCP2	RE2	RE1	RE0
Dual PWM	10xx 11xx	RB3/INT3	RC1/T1OSI	P2A	P2B	RE1	RE0
Quad PWM	x1xx 11xx	RB3/INT3	RC1/T1OSI	P2A	P2B	P2C	P2D
PIC18F8527/8622/8627/8722 Devices, CCP2MX = 1, all other Program Memory modes:							
Compatible CCP	00xx 11xx	RB3/INT3	ECCP2	AD15(1)	AD10(1)	AD9(1)	AD8(1)
Dual PWM	10xx 11xx	RB3/INT3	P2A	AD15(1)	AD10/P2B(1)	AD9(1)	AD8(1)
Quad PWM	x1xx 11xx	RB3/INT3	P2A	AD15(1)	AD10/P2B(1)	AD9/P2C(1)	P2D/AD8(1)
PIC18F8527/8622/8627/8722 Devices, CCP2MX = 0, all other Program Memory modes:							
Compatible CCP	00xx 11xx	ECCP2	RC1/T1OSI	AD15(1)	AD10(1)	AD9(1)	AD8(1)
Dual PWM	10xx 11xx	P2A	RC1/T1OSI	AD15(1)	AD10/P2B(1)	AD9(1)	AD8(1)
Quad PWM	x1xx 11xx	P2A	RC1/T1OSI	AD15(1)	AD10/P2B(1)	AD9/P2C(1)	P2D/AD8(1)

Legend: x = Don't care. Shaded cells indicate pin assignments not used by ECCP2 in a given mode.

Note 1: The EMB address bus width will determine whether the pin will perform an EMB or port/peripheral function.

© 2008 Microchip Technology Inc.

TABLE 18-3: PIN CONFIGURATIONS FOR ECCP3

ECCP Mode	CCP3CON Configuration	RG0	RE4	RE3	RG3	RH5	RH4
PIC18F6527/6622/6627/6722 Devices:							
Compatible CCP	00xx 11xx	ECCP3	RE4	RE3	RG3/CCP4	N/A	N/A
Dual PWM	10xx 11xx	P3A	P3B	RE3	RG3/CCP4	N/A	N/A
Quad PWM	x1xx 11xx	P3A	P3B	P3C	CCP4/P3D(1)	N/A	N/A
PIC18F8527/8622/8627/8722 Devices, ECCPMX = 1, Microcontroller mode:							
Compatible CCP	00xx 11xx	ECCP3	RE4	RE3	RG3/CCP4	RH5/AN13	RH4/AN12
Dual PWM	10xx 11xx	P3A	P3B	RE3	RG3/CCP4	RH5/AN13	RH4/AN12
Quad PWM	x1xx 11xx	P3A	P3B	P3C	CCP4/P3D(1)	RH5/AN13	RH4/AN12
PIC18F8527/8622/8627/8722 Devices, ECCPMX = 0, Microcontroller mode:							
Compatible CCP	00xx 11xx	ECCP3	RE4	RE3	RG3/CCP4	RH5/AN13	RH4/AN12
Dual PWM	10xx 11xx	P3A	RE4	RE3	RG3/CCP4	P3B	RH4/AN12
Quad PWM	x1xx 11xx	P3A	RE4	RE3	CCP4/P3D(1)	P3B	P3C
PIC18F8527/8622/8627/8722 Devices, ECCPMX = 1, all other Program Memory modes:							
Compatible CCP	00xx 11xx	ECCP3	AD12(2)	AD10(2)	RG3/CCP4	RH5/AN13	RH4/AN12
Dual PWM	10xx 11xx	P3A	AD12/P3B(2)	AD10(2)	RG3/CCP4	RH5/AN13	RH4/AN12
Quad PWM	x1xx 11xx	P3A	AD12/P3B(2)	P3C/AD10(1)	CCP4/P3D(1)	RH5/AN13	RH4/AN12
PIC18F8527/8622/8627/8722 Devices, ECCPMX = 0, all other Program Memory modes:							
Compatible CCP	00xx 11xx	ECCP3	AD12(2)	AD10(2)	RG3/CCP4	RH5/AN13	RH4/AN12
Dual PWM	10xx 11xx	P3A	AD12(2)	AD10(2)	RG3/CCP4	P3B	RH4/AN12
Quad PWM	x1xx 11xx	P3A	AD12(2)	AD10(2)	CCP4/P3D(1)	P3B	P3C

Legend: x = Don't care, N/A = Not available. Shaded cells indicate pin assignments not used by ECCP3 in a given mode.

Note 1: With ECCP3 in Quad PWM mode, the CCP4 module's output overrides P3D.

2: The EMB address bus width will determine whether the pin will perform an EMB or port/peripheral function.

18.1.3 ECCP MODULES AND TIMER RESOURCES

Like the standard CCP modules, the ECCP modules can utilize Timers 1, 2, 3 or 4, depending on the mode selected. Timer1 and Timer3 are available for modules in Capture or Compare modes, while Timer2 and Timer4 are available for modules in PWM mode. Additional details on timer resources are provided in **Section 17.1.1 "CCP Modules and Timer Resources"**.

18.2 Capture and Compare Modes

With the exception of the Special Event Trigger discussed below, the Capture and Compare modes of the ECCP modules are identical in operation to that of CCP4. These are discussed in detail in **Section 17.2 "Capture Mode"** and **Section 17.3 "Compare Mode"**.

18.2.1 SPECIAL EVENT TRIGGER

The Special Event Trigger output of ECCPx resets the TMR1 or TMR3 register pair, depending on which timer resource is currently selected. This allows the CCPRx registers to effectively be 16-bit programmable period registers for Timer1 or Timer3.

18.3 Standard PWM Mode

When configured in Single Output mode, the ECCP module functions identically to the standard CCP module in PWM mode as described in **Section 17.4 "PWM Mode"**. This is also sometimes referred to as "Compatible CCP" mode as in Tables 18-1 through 18-3.

Note:	When setting up single output PWM operations, users are free to use either of the processes described in **Section 17.4.3 "Setup for PWM Operation"** or **Section 18.4.9 "Setup for PWM Operation"**. The latter is more generic, but will work for either single or multi-output PWM.

18.4 Enhanced PWM Mode

The Enhanced PWM mode provides additional PWM output options for a broader range of control applications. The module is a backward compatible version of the standard CCP module and offers up to four outputs, designated PxA through PxD. Users are also able to select the polarity of the signal (either active-high or active-low). The module's output mode and polarity are configured by setting the PxM<1:0> and CCPxM<3:0> bits of the CCPxCON register (CCPxCON<7:6> and CCPxCON<3:0>, respectively).

For the sake of clarity, Enhanced PWM mode operation is described generically throughout this section with respect to ECCP1 and TMR2 modules. Control register names are presented in terms of ECCP1. All three Enhanced modules, as well as the two timer resources, can be used interchangeably and function identically. TMR2 or TMR4 can be selected for PWM operation by selecting the proper bits in T3CON.

Figure 18-1 shows a simplified block diagram of PWM operation. All control registers are double-buffered and are loaded at the beginning of a new PWM cycle (the period boundary when Timer2 resets) in order to prevent glitches on any of the outputs. The exception is the PWM Dead-Band Delay register, ECCP1DEL, which is loaded at either the duty cycle boundary or the boundary period (whichever comes first). Because of the buffering, the module waits until the assigned timer resets instead of starting immediately. This means that Enhanced PWM waveforms do not exactly match the standard PWM waveforms, but are instead offset by one full instruction cycle (4 TOSC).

As before, the user must manually configure the appropriate TRIS bits for output.

18.4.1 PWM PERIOD

The PWM period is specified by writing to the PR2 register. The PWM period can be calculated using the following equation:

EQUATION 18-1:

$$\text{PWM Period} = [(PR2) + 1] \cdot 4 \cdot T_{OSC} \cdot (\text{TMR2 Prescale Value})$$

PWM frequency is defined as 1/[PWM period]. When TMR2 is equal to PR2, the following three events occur on the next increment cycle:

- TMR2 is cleared
- The ECCP1 pin is set (if PWM duty cycle = 0%, the ECCP1 pin will not be set)
- The PWM duty cycle is copied from CCPR1L into CCPR1H

Note:	The Timer2 postscaler (see **Section 14.0 "Timer2 Module"**) is not used in the determination of the PWM frequency. The postscaler could be used to have a servo update rate at a different frequency than the PWM output.

© 2008 Microchip Technology Inc.

FIGURE 18-1: SIMPLIFIED BLOCK DIAGRAM OF THE ENHANCED PWM MODULE

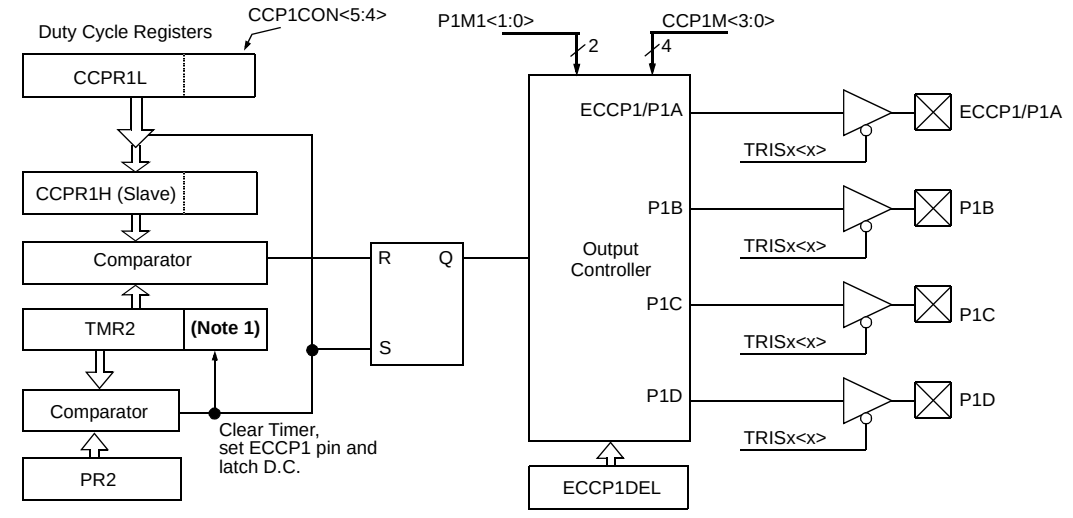

Note: The 8-bit TMR2 register is concatenated with the 2-bit internal Q clock, or 2 bits of the prescaler, to create the 10-bit time base.

18.4.2 PWM DUTY CYCLE

The PWM duty cycle is specified by writing to the CCPR1L register and to the CCP1CON<5:4> bits. Up to 10-bit resolution is available. The CCPR1L contains the eight MSbs and the CCP1CON<5:4> contains the two LSbs. This 10-bit value is represented by CCPR1L:CCP1CON<5:4>. The PWM duty cycle is calculated by the equation:

EQUATION 18-2:

$$\text{PWM Duty Cycle} = (\text{CCPR1L:CCP1CON<5:4>}) \cdot T_{OSC} \cdot (\text{TMR2 Prescale Value})$$

CCPR1L and CCP1CON<5:4> can be written to at any time but the duty cycle value is not copied into CCPR1H until a match between PR2 and TMR2 occurs (i.e., the period is complete). In PWM mode, CCPR1H is a read-only register.

The CCPR1H register and a 2-bit internal latch are used to double-buffer the PWM duty cycle. This double-buffering is essential for glitchless PWM operation. When the CCPR1H and 2-bit latch match TMR2, concatenated with an internal 2-bit Q clock or two bits of the TMR2 prescaler, the ECCP1 pin is cleared. The maximum PWM resolution (bits) for a given PWM frequency is given by the equation:

EQUATION 18-3:

$$\text{PWM Resolution (max)} = \frac{\log\left(\frac{F_{OSC}}{F_{PWM}}\right)}{\log(2)} \text{ bits}$$

Note: If the PWM duty cycle value is longer than the PWM period, the ECCP1 pin will not be cleared.

TABLE 18-4: EXAMPLE PWM FREQUENCIES AND RESOLUTIONS AT 40 MHz

PWM Frequency	2.44 kHz	9.77 kHz	39.06 kHz	156.25 kHz	312.50 kHz	416.67 kHz
Timer Prescaler (1, 4, 16)	16	4	1	1	1	1
PR2 Value	FFh	FFh	FFh	3Fh	1Fh	17h
Maximum Resolution (bits)	10	10	10	8	7	6.58

18.4.3 PWM OUTPUT CONFIGURATIONS

The P1M1:P1M0 bits in the CCP1CON register allow one of four configurations:

- Single Output
- Half-Bridge Output
- Full-Bridge Output, Forward mode
- Full-Bridge Output, Reverse mode

The Single Output mode is the standard PWM mode discussed in **Section 18.4 “Enhanced PWM Mode”**. The Half-Bridge and Full-Bridge Output modes are covered in detail in the sections that follow.

The general relationship of the outputs in all configurations is summarized in Figure 18-2.

FIGURE 18-2: PWM OUTPUT RELATIONSHIPS (ACTIVE-HIGH STATE)

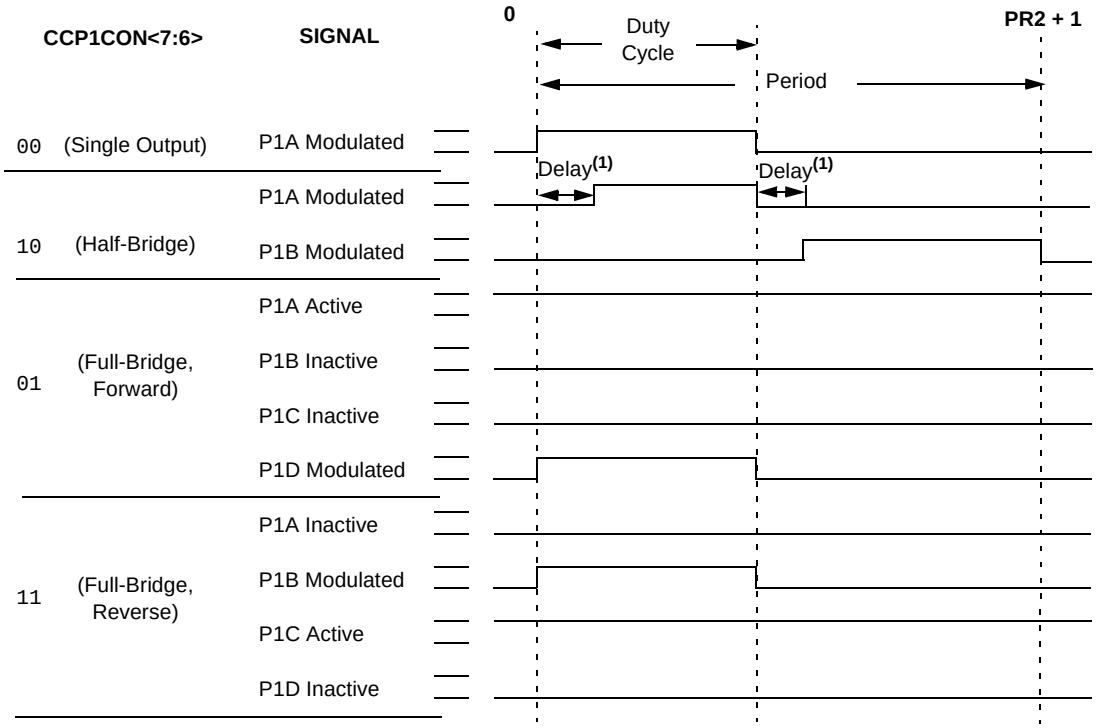

Relationships:

- Period = 4 * TOSC * (PR2 + 1) * (TMR2 Prescale Value)
- Duty Cycle = TOSC * (CCPR1L<7:0>:CCP1CON<5:4>) * (TMR2 Prescale Value)
- Delay = 4 * TOSC * (ECCP1DEL<6:0>)

Note 1: Dead-band delay is programmed using the ECCP1DEL register (**Section 18.4.6 “Programmable Dead-Band Delay”**).

© 2008 Microchip Technology Inc.

FIGURE 18-3: PWM OUTPUT RELATIONSHIPS (ACTIVE-LOW STATE)

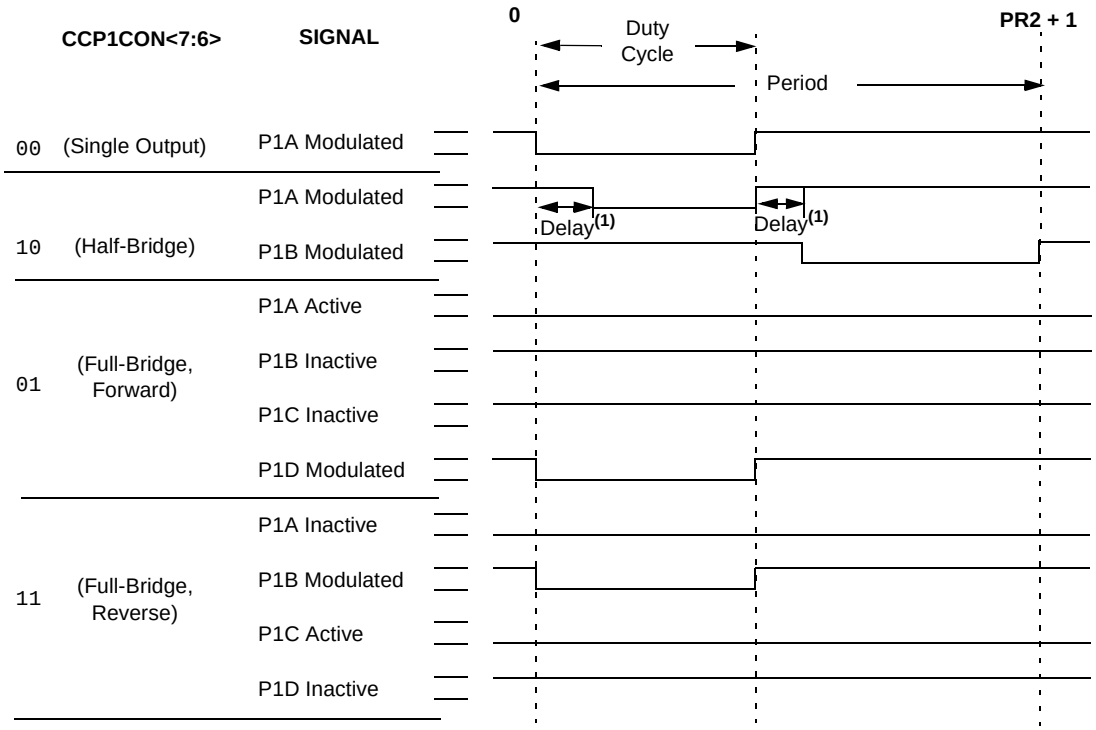

Relationships:

- Period = 4 * Tosc * (PR2 + 1) * (TMR2 Prescale Value)
- Duty Cycle = Tosc * (CCPR1L<7:0>:CCP1CON<5:4>) * (TMR2 Prescale Value)
- Delay = 4 * Tosc * (ECCP1DEL<6:0>)

Note 1: Dead-band delay is programmed using the ECCP1DEL register (**Section 18.4.6 "Programmable Dead-Band Delay"**).

18.4.4 HALF-BRIDGE MODE

In the Half-Bridge Output mode, two pins are used as outputs to drive push-pull loads. The PWM output signal is output on the P1A pin, while the complementary PWM output signal is output on the P1B pin (Figure 18-4). This mode can be used for half-bridge applications, as shown in Figure 18-5, or for full-bridge applications, where four power switches are being modulated with two PWM signals.

In Half-Bridge Output mode, the programmable dead-band delay can be used to prevent shoot-through current in half-bridge power devices. The value of bits, P1DC<6:0> sets the number of instruction cycles before the output is driven active. If the value is greater than the duty cycle, the corresponding output remains inactive during the entire cycle. See **Section 18.4.6 "Programmable Dead-Band Delay"** for more details on dead-band delay operations.

The P1A and P1B outputs are multiplexed with the PORTC<2> and PORTE<6> data latches. Alternatively, P1B can be assigned to PORTH<7> by programming the ECCPMX Configuration bit to '0'. See Table 18-1, Table 18-2 and Table 18-3 for more information. The associated TRIS bit must be cleared to configure P1A and P1B as outputs.

FIGURE 18-4: HALF-BRIDGE PWM OUTPUT

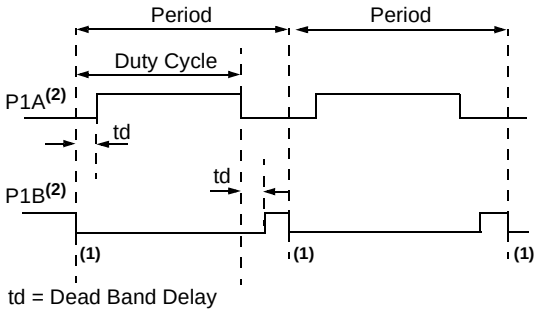

Note 1: At this time, the TMR2 register is equal to the PR2 register.

2: Output signals are shown as active-high.

FIGURE 18-5: EXAMPLES OF HALF-BRIDGE OUTPUT MODE APPLICATIONS

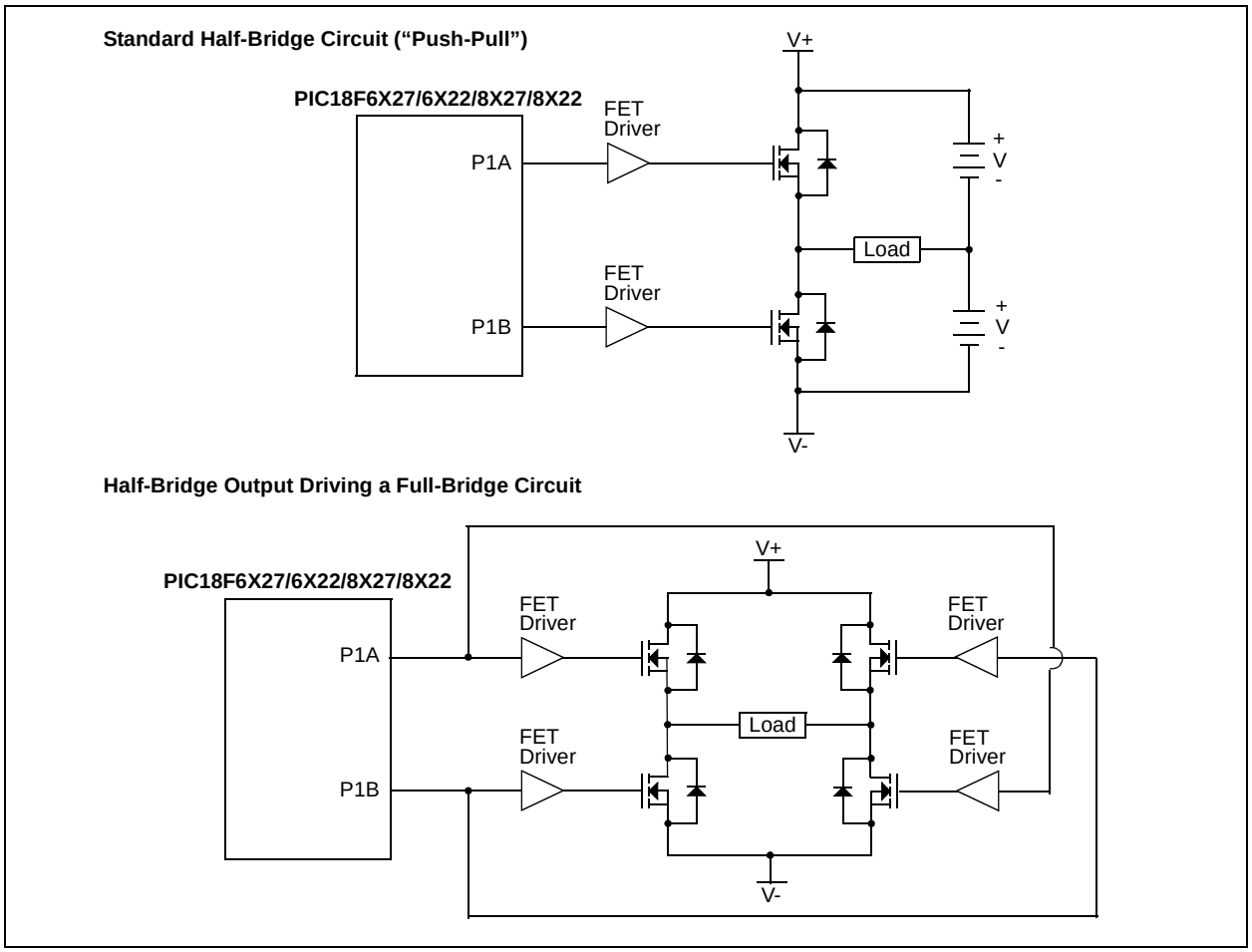

© 2008 Microchip Technology Inc.

18.4.5 FULL-BRIDGE MODE

In Full-Bridge Output mode, four pins are used as outputs; however, only two outputs are active at a time. In the Forward mode, pin P1A is continuously active and pin P1D is modulated. In the Reverse mode, pin P1C is continuously active and pin P1B is modulated. These are illustrated in Figure 18-6.

P1A, P1B, P1C and P1D outputs are multiplexed with the PORTC<2>, PORTE<6:5> and PORTG<4> data latches. Alternatively, P1B and P1C can be assigned to PORTH<7> and PORTH<6>, respectively, by programming the ECCPMX Configuration bit to '0'. See Table 18-1, Table 18-2 and Table 18-3 for more information. The associated bits must be cleared to make the P1A, P1B, P1C and P1D pins outputs.

FIGURE 18-6: FULL-BRIDGE PWM OUTPUT

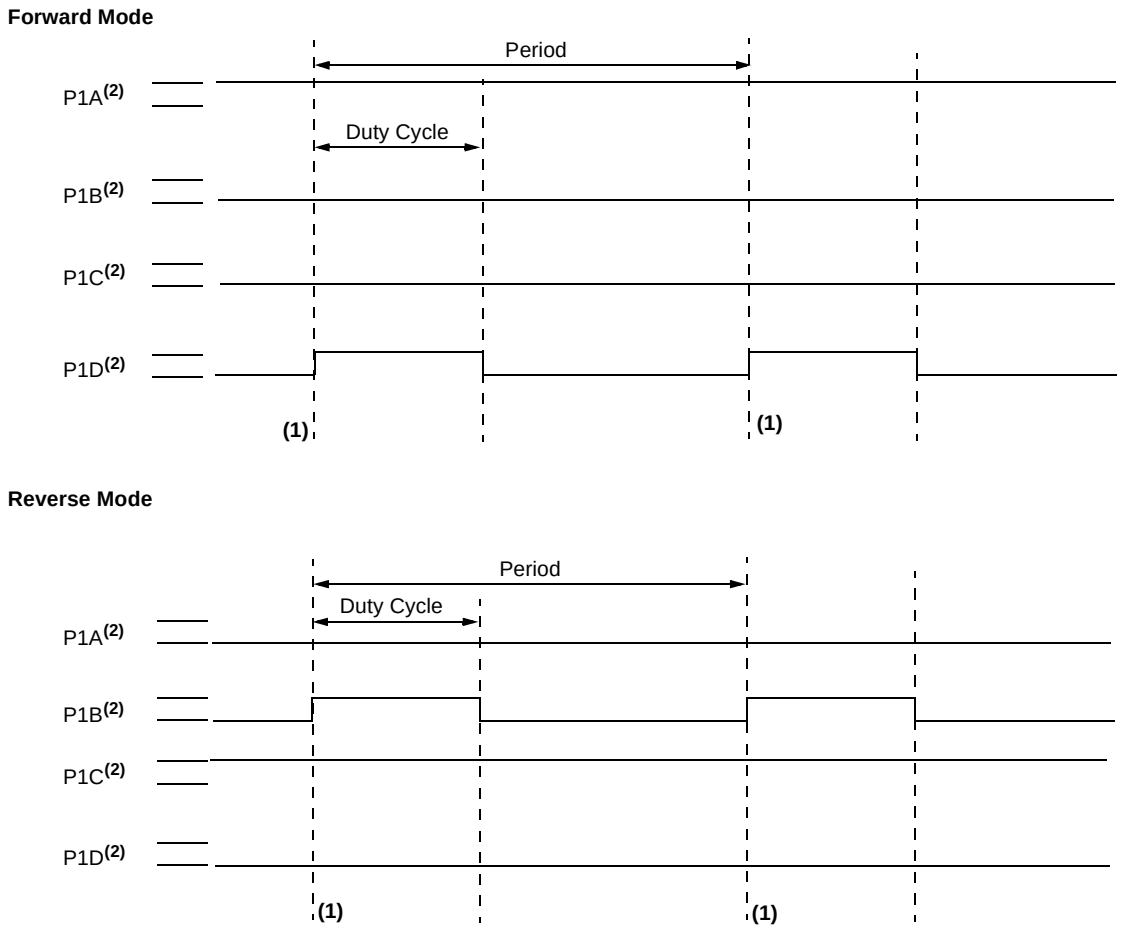

Note 1: At this time, the TMR2 register is equal to the PR2 register.
2: Output signal is shown as active-high.

FIGURE 18-7: EXAMPLE OF FULL-BRIDGE APPLICATION

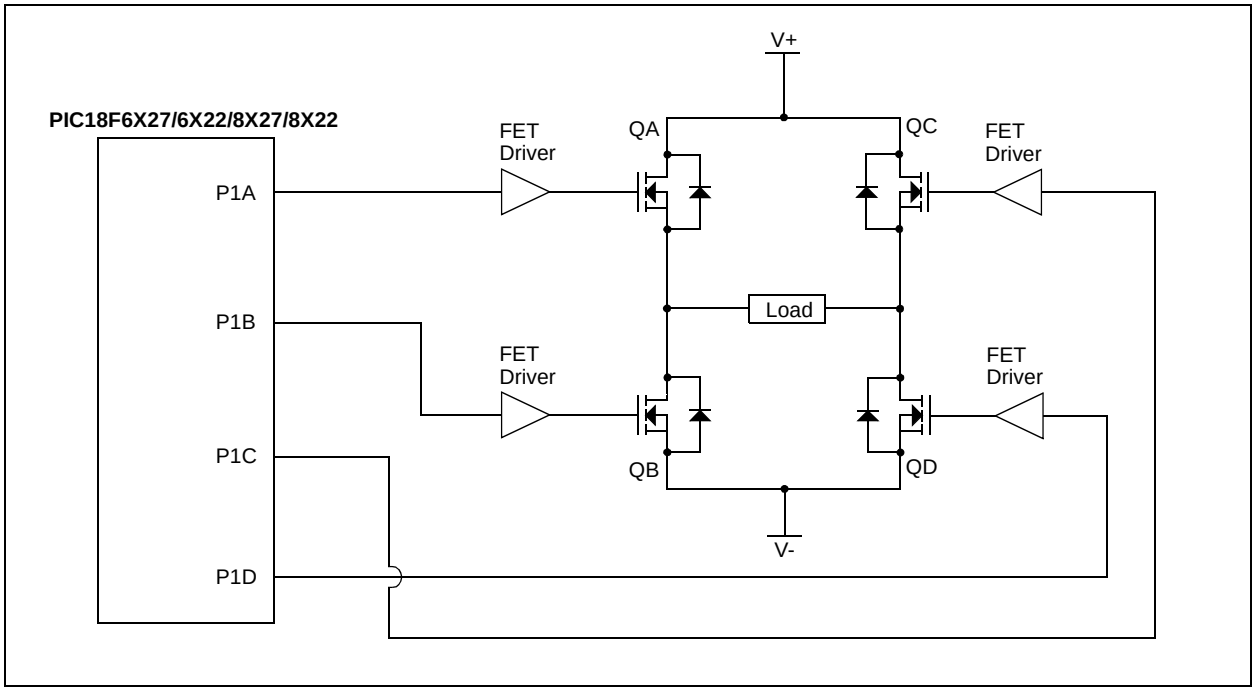

18.4.5.1 Direction Change in Full-Bridge Mode

In the Full-Bridge Output mode, the P1M1 bit in the CCP1CON register allows users to control the forward/reverse direction. When the application firmware changes this direction control bit, the module will assume the new direction on the next PWM cycle.

Just before the end of the current PWM period, the modulated outputs (P1B and P1D) are placed in their inactive state, while the unmodulated outputs (P1A and P1C) are switched to drive in the opposite direction. This occurs in a time interval of (4 TOSC * (Timer2 Prescale Value)) before the next PWM period begins. The Timer2 prescaler will be either 1, 4 or 16, depending on the value of the T2CKPSx bit (T2CON<1:0>). During the interval from the switch of the unmodulated outputs to the beginning of the next period, the modulated outputs (P1B and P1D) remain inactive. This relationship is shown in Figure 18-8.

Note that in the Full-Bridge Output mode, the ECCP1 module does not provide any dead-band delay. In general, since only one output is modulated at all times, dead-band delay is not required. However, there is a situation where a dead-band delay might be required. This situation occurs when both of the following conditions are true:

1. The direction of the PWM output changes when the duty cycle of the output is at or near 100%.
2. The turn-off time of the power switch, including the power device and driver circuit, is greater than the turn-on time.

Figure 18-9 shows an example where the PWM direction changes from forward to reverse at a near 100% duty cycle. At time, t1, the outputs P1A and P1D become inactive, while output P1C becomes active. In this example, since the turn-off time of the power devices is longer than the turn-on time, a shoot-through current may flow through power devices QC and QD (see Figure 18-7) for the duration of ‘t’. The same phenomenon will occur to power devices QA and QB for PWM direction change from reverse to forward.

If changing PWM direction at high duty cycle is required for an application, one of the following requirements must be met:

1. Reduce PWM for a PWM period before changing directions.
2. Use switch drivers that can drive the switches off faster than they can drive them on.

Other options to prevent shoot-through current may exist.

© 2008 Microchip Technology Inc.

FIGURE 18-8: PWM DIRECTION CHANGE

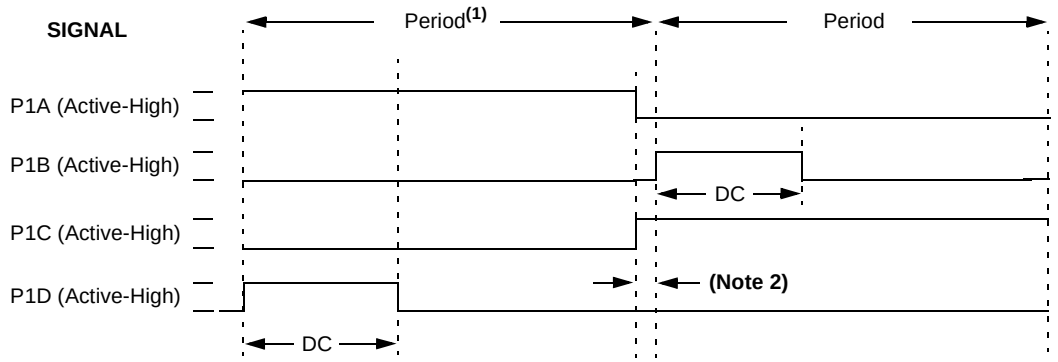

Note 1: The direction bit in the ECCP1 Control register (CCP1CON<7>) is written any time during the PWM cycle.
2: When changing directions, the P1A and P1C signals switch before the end of the current PWM cycle at intervals of 4 TOSC, 16 TOSC or 64 TOSC, depending on the Timer2 prescaler value. The modulated P1B and P1D signals are inactive at this time.

FIGURE 18-9: PWM DIRECTION CHANGE AT NEAR 100% DUTY CYCLE(1)

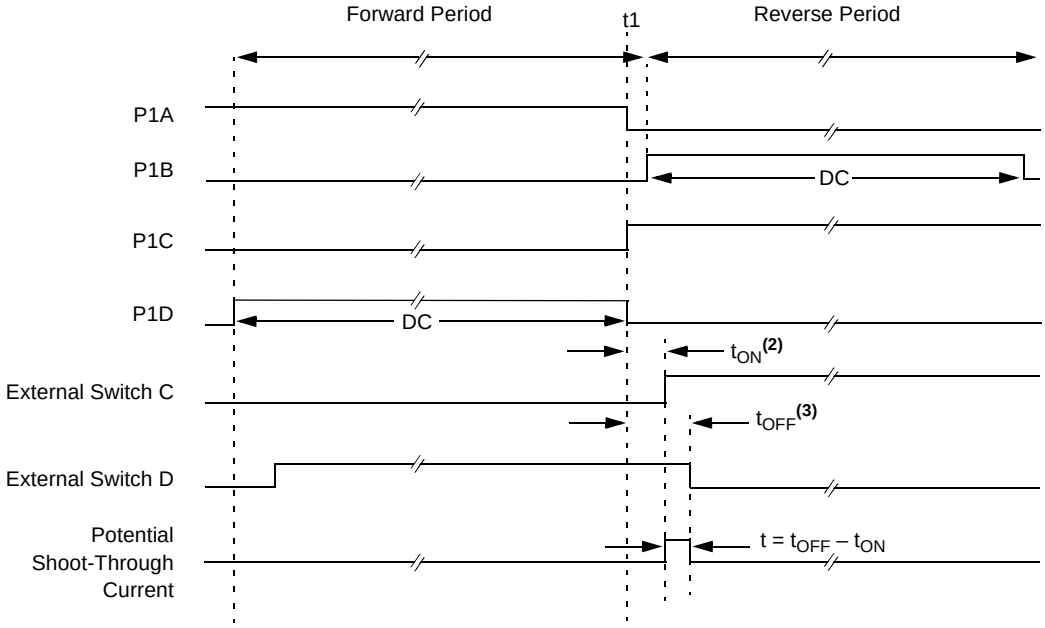

Note 1: All signals are shown as active-high.
2: t_{ON} is the turn-on delay of power switch QC and its driver.
3: t_{OFF} is the turn-off delay of power switch QD and its driver.

18.4.6 PROGRAMMABLE DEAD-BAND DELAY

In half-bridge applications where all power switches are modulated at the PWM frequency at all times, the power switches normally require more time to turn off than to turn on. If both the upper and lower power switches are switched at the same time (one turned on and the other turned off), both switches may be on for a short period of time until one switch completely turns off. During this brief interval, a very high current (*shoot-through current*) may flow through both power switches, shorting the bridge supply. To avoid this potentially destructive shoot-through current from flowing during switching, turning on either of the power switches is normally delayed to allow the other switch to completely turn off.

In the Half-Bridge Output mode, a digitally programmable dead-band delay is available to avoid shoot-through current from destroying the bridge power switches. The delay occurs at the signal transition from the non-active state to the active state. See Figure 18-4 for illustration. The lower seven bits of the ECCP1DEL register (Register 18-2) set the delay period in terms of microcontroller instruction cycles (TCY or 4 TOSC).

18.4.7 ENHANCED PWM AUTO-SHUTDOWN

When the ECCP is programmed for any of the Enhanced PWM modes, the active output pins may be configured for auto-shutdown. Auto-shutdown immediately places the Enhanced PWM output pins into a defined shutdown state when a shutdown event occurs.

A shutdown event can be caused by either of the two comparator modules or the FLT0 pin (or any combination of these three sources). The comparators may be used to monitor a voltage input proportional to a current being monitored in the bridge circuit. If the voltage exceeds a threshold, the comparator switches state and triggers a shutdown. Alternatively, a digital signal on the FLT0 pin can also trigger a shutdown. The auto-shutdown feature can be disabled by not selecting any auto-shutdown sources. The auto-shutdown sources to be used are selected using the ECCP1AS<2:0> bits (ECCP1AS<6:4>).

When a shutdown occurs, the output pins are asynchronously placed in their shutdown states, specified by the PSS1AC<1:0> and PSS1BD<1:0> bits (ECCP1AS<3:0>). Each pin pair (P1A/P1C and P1B/P1D) may be set to drive high, drive low or be tri-stated (not driving). The ECCP1ASE bit (ECCP1AS<7>) is also set to hold the Enhanced PWM outputs in their shutdown states.

The ECCP1ASE bit is set by hardware when a shutdown event occurs. If automatic restarts are not enabled, the ECCP1ASE bit is cleared by firmware when the cause of the shutdown clears. If automatic restarts are enabled, the ECCP1ASE bit is automatically cleared when the cause of the auto-shutdown has cleared.

If the ECCP1ASE bit is set when a PWM period begins, the PWM outputs remain in their shutdown state for that entire PWM period. When the ECCP1ASE bit is cleared, the PWM outputs will return to normal operation at the beginning of the next PWM period.

Note:	Writing to the ECCP1ASE bit is disabled while a shutdown condition is active.

REGISTER 18-2: ECCPxDEL: ENHANCED PWM DEAD-BAND DELAY REGISTER

R/W-0	R/W-0	R/W-0	R/W-0	R/W-0	R/W-0	R/W-0	R/W-0
PxRSEN	PxDC6	PxDC5	PxDC4	PxDC3	PxDC2	PxDC1	PxDC0
bit 7							bit 0

Legend:			
R = Readable bit	W = Writable bit	U = Unimplemented bit, read as ‘0’	
-n = Value at POR	‘1’ = Bit is set	‘0’ = Bit is cleared	x = Bit is unknown

bit 7 **PxRSEN:** PWM Restart Enable bit

1 = Upon auto-shutdown, the ECCPxASE bit clears automatically once the shutdown event goes away; the PWM restarts automatically

0 = Upon auto-shutdown, the ECCPxASE bit must be cleared in software to restart the PWM

bit 6-0 **PxDC<6:0>:** PWM Delay Count bits

Delay time, in number of FOSC/4 (4 * TOSC) cycles, between the scheduled and actual time for a PWM signal to transition to active.

© 2008 Microchip Technology Inc.

REGISTER 18-3: ECCPxAS: ENHANCED CCP AUTO-SHUTDOWN CONFIGURATION REGISTER

R/W-0	R/W-0	R/W-0	R/W-0	R/W-0	R/W-0	R/W-0	R/W-0
ECCPxASE	ECCPxAS2	ECCPxAS1	ECCPxAS0	PSSxAC1	PSSxAC0	PSSxBD1	PSSxBD0
bit 7							bit 0

Legend:			
R = Readable bit	W = Writable bit	U = Unimplemented bit, read as ‘0’	
-n = Value at POR	‘1’ = Bit is set	‘0’ = Bit is cleared	x = Bit is unknown

bit 7 **ECCPxASE:** ECCP Auto-Shutdown Event Status bit
`0` = ECCP outputs are operating
`1` = A shutdown event has occurred; ECCP outputs are in shutdown state

bit 6-4 **ECCPxAS<2:0>:** ECCP Auto-Shutdown Source Select bits
`000` = Auto-shutdown is disabled
`001` = Comparator 1 output
`010` = Comparator 2 output
`011` = Either Comparator 1 or 2
`100` = FLT0
`101` = FLT0 or Comparator 1
`110` = FLT0 or Comparator 2
`111` = FLT0 or Comparator 1 or Comparator 2

bit 3-2 **PSSxAC<1:0>:** Pins A and C Shutdown State Control bits
`00` = Drive pins A and C to ‘`0`’
`01` = Drive pins A and C to ‘`1`’
`1x` = Pins A and C tri-state

bit 1-0 **PSSxBD<1:0>:** Pins B and D Shutdown State Control bits
`00` = Drive pins B and D to ‘`0`’
`01` = Drive pins B and D to ‘`1`’
`1x` = Pins B and D tri-state

18.4.7.1 Auto-Shutdown and Automatic Restart

The Auto-Shutdown feature can be configured to allow automatic restarts of the module following a shutdown event. This is enabled by setting the P1RSEN bit of the ECCP1DEL register (ECCP1DEL<7>).

In Shutdown mode with P1RSEN = 1 (Figure 18-10), the ECCP1ASE bit will remain set for as long as the cause of the shutdown continues. When the shutdown condition clears, the ECCP1ASE bit is cleared. If P1RSEN = 0 (Figure 18-11), once a shutdown condition occurs, the ECCP1ASE bit will remain set until it is cleared by firmware. Once ECCP1ASE is cleared, the Enhanced PWM will resume at the beginning of the next PWM period.

Note:	Writing to the ECCP1ASE bit is disabled while a shutdown condition is active.

Independent of the P1RSEN bit setting, if the auto-shutdown source is one of the comparators, the shutdown condition is a level. The ECCP1ASE bit cannot be cleared as long as the cause of the shutdown persists.

The Auto-Shutdown mode can be forced by writing a ‘1’ to the ECCP1ASE bit.

18.4.8 START-UP CONSIDERATIONS

When the ECCP module is used in the PWM mode, the application hardware must use the proper external pull-up and/or pull-down resistors on the PWM output pins. When the microcontroller is released from Reset, all of the I/O pins are in the high-impedance state. The external circuits must keep the power switch devices in the OFF state until the microcontroller drives the I/O pins with the proper signal levels or activates the PWM output(s).

The CCP1M<1:0> bits (CCP1CON<1:0>) allow the user to choose whether the PWM output signals are active-high or active-low for each pair of PWM output pins (P1A/P1C and P1B/P1D). The PWM output polarities must be selected before the PWM pins are configured as outputs. Changing the polarity configuration while the PWM pins are configured as outputs is not recommended since it may result in damage to the application circuits.

The P1A, P1B, P1C and P1D output latches may not be in the proper states when the PWM module is initialized. Enabling the PWM pins for output at the same time as the ECCP1 module may cause damage to the application circuit. The ECCP1 module must be enabled in the proper output mode and complete a full PWM cycle before configuring the PWM pins as outputs. The completion of a full PWM cycle is indicated by the TMR2IF bit being set as the second PWM period begins.

FIGURE 18-10: PWM AUTO-SHUTDOWN (P1RSEN = 1, AUTO-RESTART ENABLED)

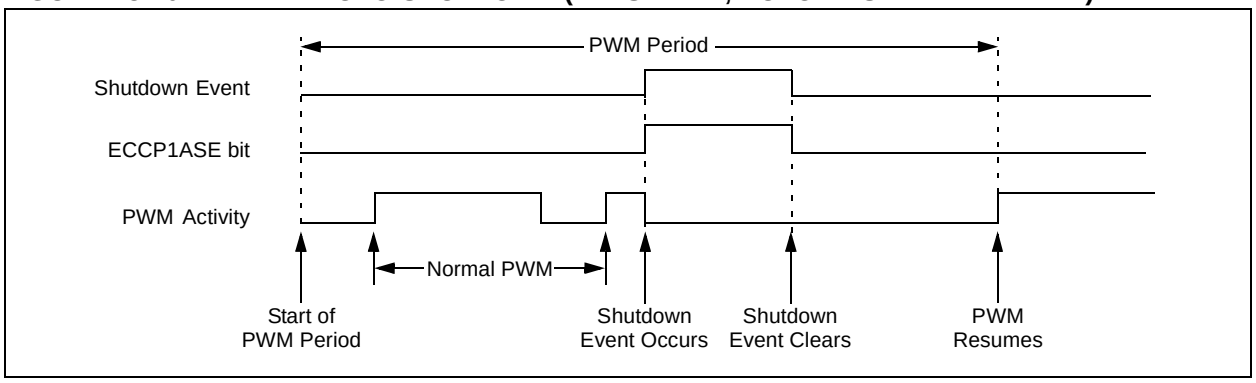

FIGURE 18-11: PWM AUTO-SHUTDOWN (P1RSEN = 0, AUTO-RESTART DISABLED)

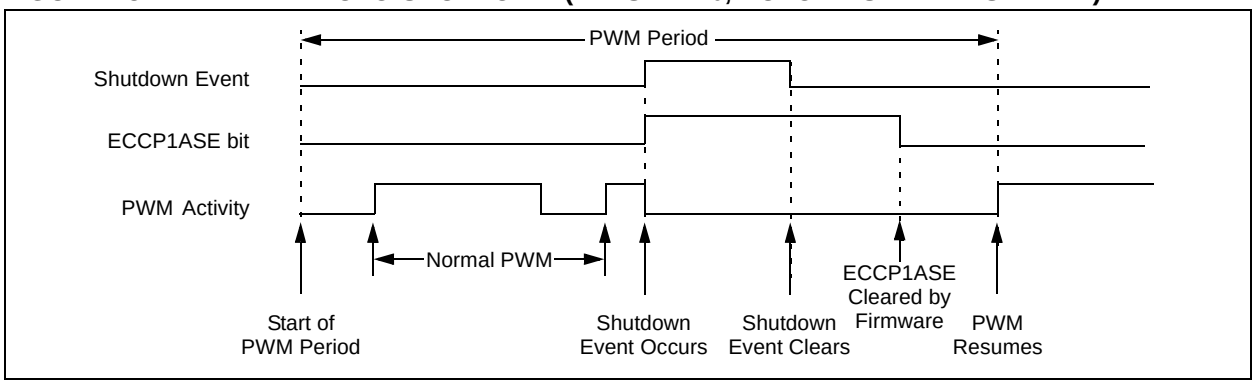

© 2008 Microchip Technology Inc.

18.4.9 SETUP FOR PWM OPERATION

The following steps should be taken when configuring the ECCP1 module for PWM operation using Timer2:

1. Configure the PWM pins, P1A and P1B (and P1C and P1D, if used), as inputs by setting the corresponding TRIS bits.
2. Set the PWM period by loading the PR2 register.
3. If auto-shutdown is required do the following:
   - Disable auto-shutdown (ECCP1AS = 0)
   - Configure source (FLT0, Comparator 1 or Comparator 2)
   - Wait for non-shutdown condition
4. Configure the ECCP1 module for the desired PWM mode and configuration by loading the CCP1CON register with the appropriate values:
   - Select one of the available output configurations and direction with the P1M<1:0> bits.
   - Select the polarities of the PWM output signals with the CCP1M<3:0> bits.
5. Set the PWM duty cycle by loading the CCPR1L register and CCP1CON<5:4> bits.
6. For Half-Bridge Output mode, set the dead-band delay by loading ECCP1DEL<6:0> with the appropriate value.
7. If auto-shutdown operation is required, load the ECCP1AS register:
   - Select the auto-shutdown sources using the ECCP1AS<2:0> bits.
   - Select the shutdown states of the PWM output pins using the PSS1AC<1:0> and PSS1BD<1:0> bits.
   - Set the ECCP1ASE bit (ECCP1AS<7>).
   - Configure the comparators using the CMCON register.
   - Configure the comparator inputs as analog inputs.
8. If auto-restart operation is required, set the P1RSEN bit (ECCP1DEL<7>).
9. Configure and start TMR2:
   - Clear the TMR2 interrupt flag bit by clearing the TMR2IF bit (PIR1<1>).
   - Set the TMR2 prescale value by loading the T2CKPS bits (T2CON<1:0>).
   - Enable Timer2 by setting the TMR2ON bit (T2CON<2>).
10. Enable PWM outputs after a new PWM cycle has started:
    - Wait until TMRx overflows (TMRxIF bit is set).
    - Enable the ECCP1/P1A, P1B, P1C and/or P1D pin outputs by clearing the respective TRIS bits.
    - Clear the ECCP1ASE bit (ECCP1AS<7>).

18.4.10 OPERATION IN POWER-MANAGED MODES

In Sleep mode, all clock sources are disabled. Timer2 or Timer4 will not increment and the state of the module will not change. If the ECCP1 pin is driving a value, it will continue to drive that value. When the device wakes up, it will continue from this state. If Two-Speed Start-ups are enabled, the initial start-up frequency from INTOSC and the postscaler may not be stable immediately.

In PRI_IDLE mode, the primary clock will continue to clock the ECCP1 module without change. In all other power-managed modes, the selected power-managed mode clock will clock Timer2 or Timer4. Other power-managed mode clocks will most likely be different than the primary clock frequency.

18.4.10.1 Operation with Fail-Safe Clock Monitor

If the Fail-Safe Clock Monitor is enabled, a clock failure will force the device into the power-managed RC_RUN mode and the OSCFIF bit (PIR2<7>) will be set. The ECCP1 will then be clocked from the internal oscillator clock source, which may have a different clock frequency than the primary clock.

See the previous section for additional details.

18.4.11 EFFECTS OF A RESET

Both Power-on Reset and subsequent Resets will force all ports to Input mode and the CCP registers to their Reset states.

This forces the Enhanced CCP module to reset to a state compatible with the standard CCP module.

TABLE 18-5: REGISTERS ASSOCIATED WITH ECCP MODULES AND TIMER1 TO TIMER4

Name	Bit 7	Bit 6	Bit 5	Bit 4	Bit 3	Bit 2	Bit 1	Bit 0	Reset Values on page
INTCON	GIE/GIEH	PEIE/GIEL	TMR0IE	INT0IE	RBIE	TMR0IF	INT0IF	RBIF	57
RCON	IPEN	SBOREN	—	$\overline{\text{RI}}$	$\overline{\text{TO}}$	$\overline{\text{PD}}$	$\overline{\text{POR}}$	$\overline{\text{BOR}}$	58
PIR1	PSPIF	ADIF	RC1IF	TX1IF	SSP1IF	CCP1IF	TMR2IF	TMR1IF	60
PIE1	PSPIE	ADIE	RC1IE	TX1IE	SSP1IE	CCP1IE	TMR2IE	TMR1IE	60
IPR1	PSPIP	ADIP	RC1IP	TX1IP	SSP1IP	CCP1IP	TMR2IP	TMR1IP	60
PIR2	OSCFIF	CMIF	—	EEIF	BCL1IF	HLVDIF	TMR3IF	CCP2IF	60
PIE2	OSCFIE	CMIE	—	EEIE	BCL1IE	HLVDIE	TMR3IE	CCP2IE	60
IPR2	OSCFIP	CMIP	—	EEIP	BCL1IP	HLVDIP	TMR3IP	CCP2IP	60
PIR3	SSP2IF	BCL2IF	RC2IF	TX2IF	TMR4IF	CCP5IF	CCP4IF	CCP3IF	60
PIE3	SSP2IE	BCL2IE	RC2IE	TX2IE	TMR4IE	CCP5IE	CCP4IE	CCP3IE	60
IPR3	SSP2IP	BCL2IP	RC2IP	TX2IP	TMR4IP	CCP5IP	CCP4IP	CCP3IP	60
TRISB	TRISB7	TRISB6	TRISB5	TRISB4	TRISB3	TRISB2	TRISB1	TRISB0	60
TRISC	TRISC7	TRISC6	TRISC5	TRISC4	TRISC3	TRISC2	TRISC1	TRISC0	60
TRISE	TRISE7	TRISE6	TRISE5	TRISE4	TRISE3	TRISE2	TRISE1	TRISE0	60
TRISG	—	—	—	TRISG4	TRISG3	TRISG2	TRISG1	TRISG0	60
TRISH(2)	TRISH7	TRISH6	TRISH5	TRISH4	TRISH3	TRISH2	TRISH1	TRISH0	60
TMR1L	Timer1 Register Low Byte								58
TMR1H	Timer1 Register High Byte								58
T1CON	RD16	T1RUN	T1CKPS1	T1CKPS0	T1OSCEN	$\overline{\text{T1SYNC}}$	TMR1CS	TMR1ON	58
TMR2	Timer2 Register								58
T2CON	—	T2OUTPS3	T2OUTPS2	T2OUTPS1	T2OUTPS0	TMR2ON	T2CKPS1	T2CKPS0	58
PR2	Timer2 Period Register								58
TMR3L	Timer3 Register Low Byte								59
TMR3H	Timer3 Register High Byte								59
T3CON	RD16	T3CCP2	T3CKPS1	T3CKPS0	T3CCP1	$\overline{\text{T3SYNC}}$	TMR3CS	TMR3ON	59
TMR4	Timer4 Register								61
T4CON	—	T4OUTPS3	T4OUTPS2	T4OUTPS1	T4OUTPS0	TMR4ON	T4CKPS1	T4CKPS0	61
PR4	Timer4 Period Register								61
CCPRxL(1)	Enhanced Capture/Compare/PWM Register x Low Byte								59, 61
CCPRxH(1)	Enhanced Capture/Compare/PWM Register x High Byte								59, 61
CCPxCON(1)	PxM1	PxM0	DCxB1	DCxB0	CCPxM3	CCPxM2	CCPxM1	CCPxM0	59
ECCPxAS(1)	ECCPxASE	ECCPxAS2	ECCPxAS1	ECCPxAS0	PSSxAC1	PSSxAC0	PSSxBD1	PSSxBD0	59, 61
ECCPxDEL(1)	PxRSEN	PxDC6	PxDC5	PxDC4	PxDC3	PxDC2	PxDC1	PxDC0	61

Legend: — = unimplemented, read as '0'. Shaded cells are not used during ECCP operation.

Note 1: Generic term for all of the identical registers of this name for all Enhanced CCP modules, where 'x' identifies the individual module (ECCP1, ECCP2 or ECCP3). Bit assignments and Reset values for all registers of the same generic name are identical.

2: This register is not implemented on PIC18F6527/6622/6627/6722 devices.

© 2008 Microchip Technology Inc.

19.0 MASTER SYNCHRONOUS SERIAL PORT (MSSP) MODULE

19.1 Master SSP (MSSP) Module Overview

The Master Synchronous Serial Port (MSSP) module is a serial interface, useful for communicating with other peripheral or microcontroller devices. These peripheral devices may be serial EEPROMs, shift registers, display drivers, A/D converters, etc. The MSSP module can operate in one of two modes:

- Serial Peripheral Interface (SPI)
- Inter-Integrated Circuit (I^2C™)
  - Full Master mode
  - Slave mode (with general address call)

The I^2C interface supports the following modes in hardware:

- Master mode
- Multi-Master mode
- Slave mode

All members of the PIC18F8722 family have two MSSP modules, designated as MSSP1 and MSSP2. Each module operates independently of the other.

Note:	Throughout this section, generic references to an MSSP module in any of its operating modes may be interpreted as being equally applicable to MSSP1 or MSSP2. Register names and module I/O signals use the generic designator 'x' to indicate the use of a numeral to distinguish a particular module when required. Control bit names are not individuated.

19.2 Control Registers

Each MSSP module has three associated control registers. These include a status register (SSPxSTAT) and two control registers (SSPxCON1 and SSPxCON2). The use of these registers and their individual Configuration bits differ significantly depending on whether the MSSP module is operated in SPI or I^2C mode.

Additional details are provided under the individual sections.

Note:	In devices with more than one MSSP module, it is very important to pay close attention to SSPCON register names. SSP1CON1 and SSP1CON2 control different operational aspects of the same module, while SSP1CON1 and SSP2CON1 control the same features for two different modules.

19.3 SPI Mode

The SPI mode allows 8 bits of data to be synchronously transmitted and received simultaneously. All four modes of SPI are supported. To accomplish communication, typically three pins are used:

- Serial Data Out (SDOx) – RC5/SDO1 or RD4/SDO2
- Serial Data In (SDIx) – RC4/SDI1/SDA1 or RD5/SDI2/SDA2
- Serial Clock (SCKx) – RC3/SCK1/SCL1 or RD6/SCK2/SCL2

Additionally, a fourth pin may be used when in a Slave mode of operation:

- Slave Select ($\overline{SSx}$) – RF7/$\overline{SS1}$ or RD7/$\overline{SS2}$

Figure 19-1 shows the block diagram of the MSSP module when operating in SPI mode.

FIGURE 19-1: MSSP BLOCK DIAGRAM (SPI MODE)

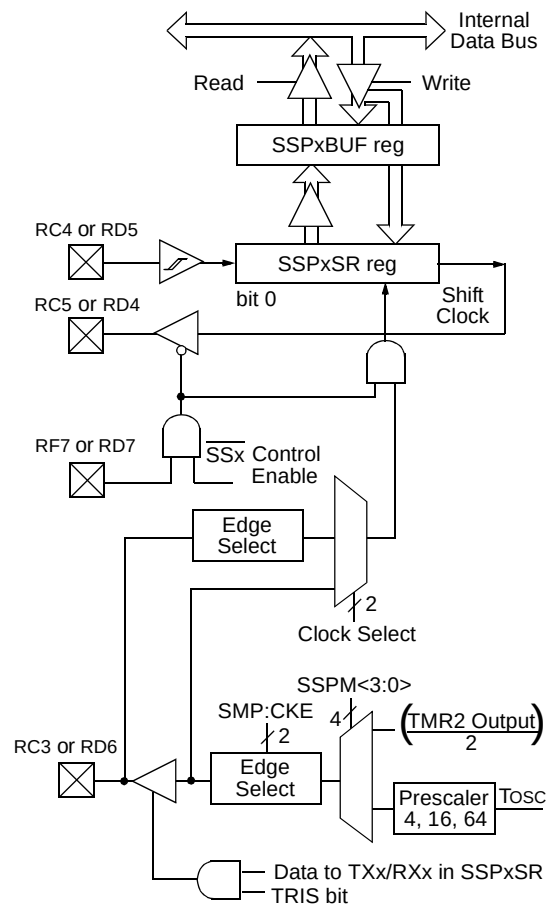

Note: Only port I/O names are used in this diagram for the sake of brevity. Refer to the text for a full list of multiplexed functions.

19.3.1 REGISTERS

Each MSSP module has four registers for SPI mode operation. These are:

- MSSP Control Register 1 (SSPxCON1)
- MSSP Status Register (SSPxSTAT)
- Serial Receive/Transmit Buffer Register (SSPxBUF)
- MSSP Shift Register (SSPxSR) – Not directly accessible

SSPxCON1 and SSPxSTAT are the control and status registers in SPI mode operation. The SSPxCON1 register is readable and writable. The lower 6 bits of the SSPxSTAT are read-only. The upper two bits of the SSPxSTAT are read/write.

SSPxSR is the shift register used for shifting data in or out. SSPxBUF is the buffer register to which data bytes are written to or read from.

In receive operations, SSPxSR and SSPxBUF together create a double-buffered receiver. When SSPxSR receives a complete byte, it is transferred to SSPxBUF and the SSPxIF interrupt is set.

During transmission, the SSPxBUF is not double-buffered. A write to SSPxBUF will write to both SSPxBUF and SSPxSR.

REGISTER 19-1: SSPxSTAT: MSSPx STATUS REGISTER (SPI MODE)

R/W-0	R/W-0	R-0	R-0	R-0	R-0	R-0	R-0
SMP	CKE	D/$\overline{A}$	P	S	R/$\overline{W}$	UA	BF
bit 7							bit 0

Legend:			
R = Readable bit	W = Writable bit	U = Unimplemented bit, read as ‘0’	
-n = Value at POR	‘1’ = Bit is set	‘0’ = Bit is cleared	x = Bit is unknown

bit 7 **SMP:** Sample bit
SPI Master mode:
1 = Input data sampled at end of data output time
0 = Input data sampled at middle of data output time
SPI Slave mode:
SMP must be cleared when SPI is used in Slave mode.

bit 6 **CKE:** SPI Clock Select bit
1 = Transmit occurs on transition from active to Idle clock state
0 = Transmit occurs on transition from Idle to active clock state

Note: Polarity of clock state is set by the CKP bit (SSPxCON1<4>).

bit 5 **D/$\overline{A}$:** Data/$\overline{\text{Address}}$ bit
Used in I^2C mode only.

bit 4 **P:** Stop bit
Used in I^2C mode only. This bit is cleared when the MSSP module is disabled, SSPEN is cleared.

bit 3 **S:** Start bit
Used in I^2C mode only.

bit 2 **R/$\overline{W}$:** Read/$\overline{\text{Write}}$ Information bit
Used in I^2C mode only.

bit 1 **UA:** Update Address bit
Used in I^2C mode only.

bit 0 **BF:** Buffer Full Status bit (Receive mode only)
1 = Receive complete, SSPxBUF is full
0 = Receive not complete, SSPxBUF is empty

© 2008 Microchip Technology Inc.

REGISTER 19-2: SSPxCON1: MSSPx CONTROL REGISTER 1 (SPI MODE)

R/W-0	R/W-0	R/W-0	R/W-0	R/W-0	R/W-0	R/W-0	R/W-0
WCOL	SSPOV(1)	SSPEN(2)	CKP	SSPM3(3)	SSPM2(3)	SSPM1(3)	SSPM0(3)
bit 7							bit 0

Legend:			
R = Readable bit	W = Writable bit	U = Unimplemented bit, read as ‘0’	
-n = Value at POR	‘1’ = Bit is set	‘0’ = Bit is cleared	x = Bit is unknown

bit 7 **WCOL:** Write Collision Detect bit
1 = The SSPxBUF register is written while it is still transmitting the previous word (must be cleared in software)
0 = No collision

bit 6 **SSPOV:** Receive Overflow Indicator bit(1)
SPI Slave mode:
1 = A new byte is received while the SSPxBUF register is still holding the previous data. In case of overflow, the data in SSPxSR is lost. Overflow can only occur in Slave mode. The user must read the SSPxBUF, even if only transmitting data, to avoid setting overflow (must be cleared in software).
0 = No overflow

bit 5 **SSPEN:** Synchronous Serial Port Enable bit(2)
1 = Enables serial port and configures SCKx, SDOx, SDIx and $\overline{SSx}$ as serial port pins
0 = Disables serial port and configures these pins as I/O port pins

bit 4 **CKP:** Clock Polarity Select bit
1 = Idle state for clock is a high level
0 = Idle state for clock is a low level

bit 3-0 **SSPM<3:0>:** Synchronous Serial Port Mode Select bits(3)
0101 = SPI Slave mode, clock = SCKx pin, $\overline{SSx}$ pin control disabled, $\overline{SSx}$ can be used as I/O pin
0100 = SPI Slave mode, clock = SCKx pin, $\overline{SSx}$ pin control enabled
0011 = SPI Master mode, clock = TMR2 output/2
0010 = SPI Master mode, clock = FOSC/64
0001 = SPI Master mode, clock = FOSC/16
0000 = SPI Master mode, clock = FOSC/4

Note 1: In Master mode, the overflow bit is not set since each new reception (and transmission) is initiated by writing to the SSPxBUF register.
2: When enabled, these pins must be properly configured as input or output.
3: Bit combinations not specifically listed here are either reserved or implemented in I^2C™ mode only.

19.3.2 OPERATION

When initializing the SPI, several options need to be specified. This is done by programming the appropriate control bits (SSPxCON1<5:0> and SSPxSTAT<7:6>). These control bits allow the following to be specified:

- Master mode (SCKx is the clock output)
- Slave mode (SCKx is the clock input)
- Clock Polarity (Idle state of SCKx)
- Data Input Sample Phase (middle or end of data output time)
- Clock Edge (output data on rising/falling edge of SCKx)
- Clock Rate (Master mode only)
- Slave Select mode (Slave mode only)

Each MSSP module consists of a transmit/receive shift register (SSPxSR) and a buffer register (SSPxBUF). The SSPxSR shifts the data in and out of the device, MSb first. The SSPxBUF holds the data that was written to the SSPxSR until the received data is ready. Once the 8 bits of data have been received, that byte is moved to the SSPxBUF register. Then, the Buffer Full detect bit, BF (SSPxSTAT<0>) and the interrupt flag bit, SSPxIF, are set. This double-buffering of the received data (SSPxBUF) allows the next byte to start reception before reading the data that was just received. Any write to the SSPxBUF register during transmission/reception of data will be ignored and the Write Collision Detect bit, WCOL (SSPxCON1<7>), will be set. User software must clear the WCOL bit so that it can be determined if the following write(s) to the SSPxBUF register completed successfully.

When the application software is expecting to receive valid data, the SSPxBUF should be read before the next byte of data to transfer is written to the SSPxBUF. The Buffer Full bit, BF (SSPxSTAT<0>), indicates when SSPxBUF has been loaded with the received data (transmission is complete). When the SSPxBUF is read, the BF bit is cleared. This data may be irrelevant if the SPI is only a transmitter. Generally, the MSSP interrupt is used to determine when the transmission/reception has completed. If the interrupt method is not going to be used, then software polling can be done to ensure that a write collision does not occur. Example 19-1 shows the loading of the SSPxBUF (SSPxSR) for data transmission.

The SSPxSR is not directly readable or writable and can only be accessed by addressing the SSPxBUF register. Additionally, the SSPxSTAT register indicates the various status conditions.

EXAMPLE 19-1: LOADING THE SSP1BUF (SSP1SR) REGISTER

```
LOOP    BTFSS   SSP1STAT, BF    ;Has data been received (transmit complete)?
        BRA     LOOP            ;No
        MOVF    SSP1BUF, W      ;WREG reg = contents of SSP1BUF
        MOVWF   RXDATA          ;Save in user RAM, if data is meaningful
        MOVF    TXDATA, W       ;W reg = contents of TXDATA
        MOVWF   SSP1BUF         ;New data to xmit
```


© 2008 Microchip Technology Inc.

19.3.3 ENABLING SPI I/O

To enable the serial port, SSP Enable bit, SSPEN (SSPxCON1<5>), must be set. To reset or reconfigure SPI mode, clear the SSPEN bit, reinitialize the SSPxCON registers and then set the SSPEN bit. This configures the SDIx, SDOx, SCKx and $\overline{SS}$x pins as serial port pins. For the pins to behave as the serial port function, some must have their data direction bits (in the TRIS register) appropriately programmed as follows:

- SDIx is automatically controlled by the SPI module
- SDOx must have the TRISC<5> or TRISD<4> bit cleared
- SCKx (Master mode) must have the TRISC<3> or TRISD<6>bit cleared
- SCKx (Slave mode) must have the TRISC<3> or TRISD<6> bit set
- $\overline{SS}$x must have the TRISF<7> or TRISD<7> bit set

Any serial port function that is not desired may be overridden by programming the corresponding data direction (TRIS) register to the opposite value.

19.3.4 TYPICAL CONNECTION

Figure 19-2 shows a typical connection between two microcontrollers. The master controller (Processor 1) initiates the data transfer by sending the SCKx signal. Data is shifted out of both shift registers on their programmed clock edge and latched on the opposite edge of the clock. Both processors should be programmed to the same Clock Polarity (CKP), then both controllers would send and receive data at the same time. Whether the data is meaningful (or dummy data) depends on the application software. This leads to three scenarios for data transmission:

- Master sends data – Slave sends dummy data
- Master sends data – Slave sends data
- Master sends dummy data – Slave sends data

FIGURE 19-2: SPI MASTER/SLAVE CONNECTION

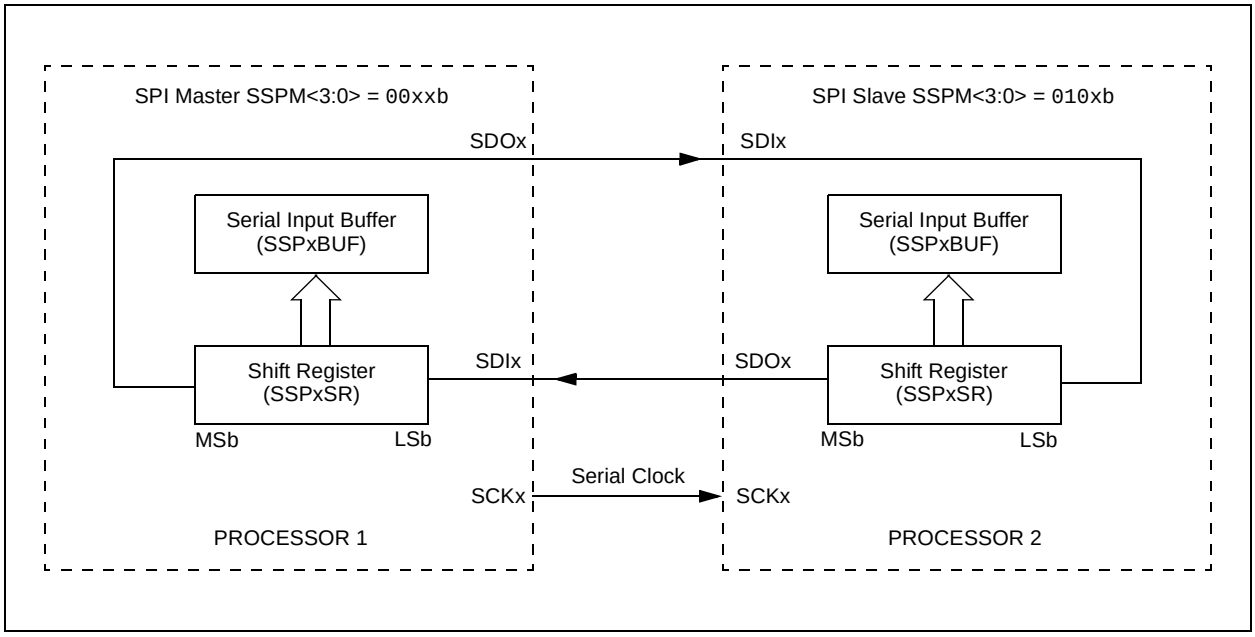

19.3.5 MASTER MODE

The master can initiate the data transfer at any time because it controls the SCKx. The master determines when the slave (Processor 1, Figure 19-2) is to broadcast data by the software protocol.

In Master mode, the data is transmitted/received as soon as the SSPxBUF register is written to. If the SPI is only going to receive, the SDOx output could be disabled (programmed as an input). The SSPxSR register will continue to shift in the signal present on the SDIx pin at the programmed clock rate. As each byte is received, it will be loaded into the SSPxBUF register as if a normal received byte (interrupts and status bits appropriately set). This could be useful in receiver applications as a “Line Activity Monitor” mode.

The clock polarity is selected by appropriately programming the CKP bit (SSPxCON1<4>). This then, would give waveforms for SPI communication as shown in Figure 19-3, Figure 19-5 and Figure 19-6, where the MSB is transmitted first. In Master mode, the SPI clock rate (bit rate) is user programmable to be one of the following:

- FOSC/4 (or TCY)
- FOSC/16 (or 4 • TCY)
- FOSC/64 (or 16 • TCY)
- Timer2 output/2

This allows a maximum data rate (at 40 MHz) of 10.00 Mbps.

Figure 19-3 shows the waveforms for Master mode. When the CKE bit is set, the SDOx data is valid before there is a clock edge on SCKx. The change of the input sample is shown based on the state of the SMP bit. The time when the SSPxBUF is loaded with the received data is shown.

FIGURE 19-3: SPI MODE WAVEFORM (MASTER MODE)

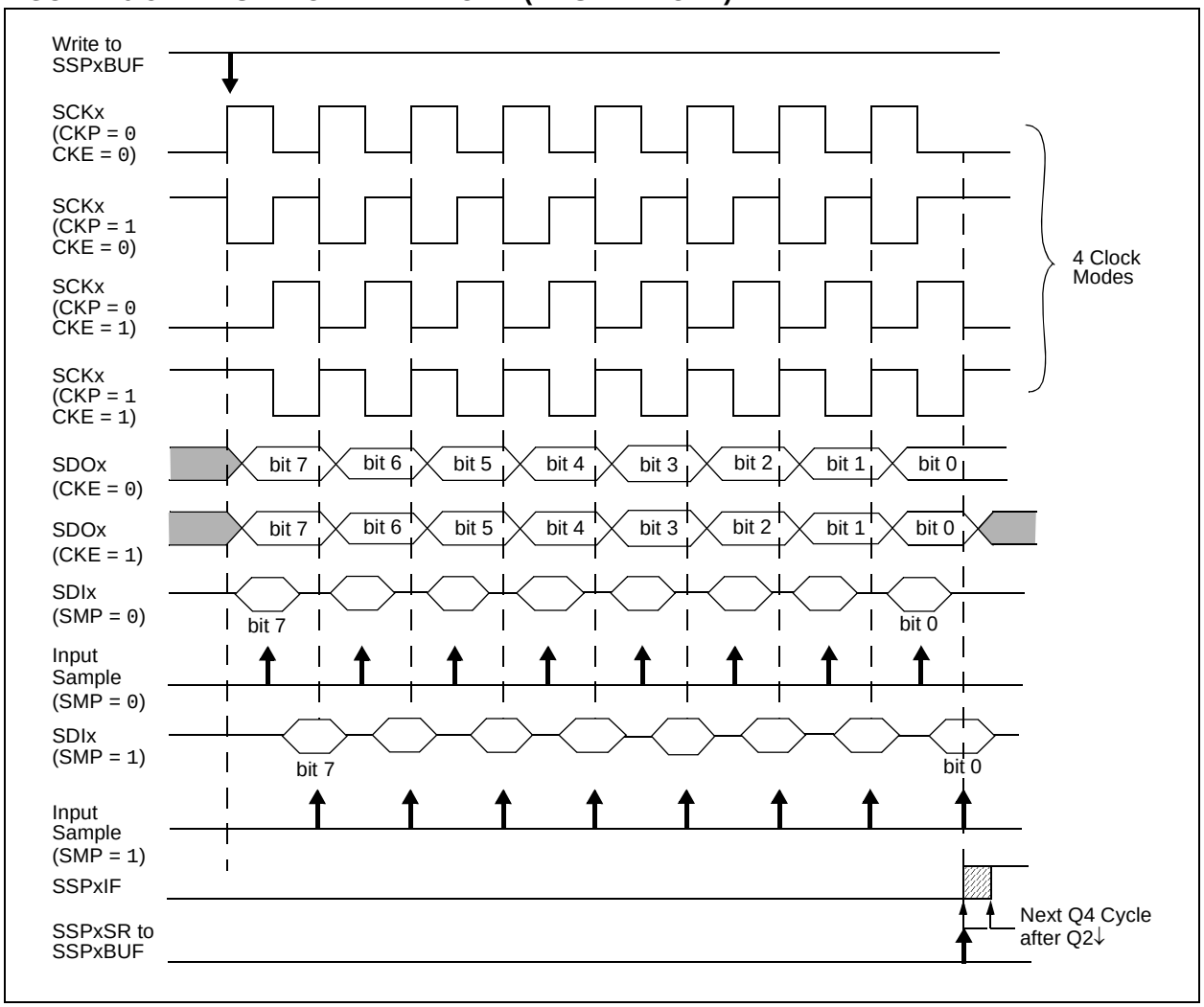

© 2008 Microchip Technology Inc.

19.3.6 SLAVE MODE

In Slave mode, the data is transmitted and received as the external clock pulses appear on SCKx. When the last bit is latched, the SSPxIF interrupt flag bit is set.

While in Slave mode, the external clock is supplied by the external clock source on the SCKx pin. This external clock must meet the minimum high and low times as specified in the electrical specifications.

While in Sleep mode, the slave can transmit/receive data. When a byte is received, the device can be configured to wake-up from Sleep.

19.3.7 SLAVE SELECT SYNCHRONIZATION

The $\overline{\text{SSx}}$ pin allows a Synchronous Slave mode. The SPI must be in Slave mode with the $\overline{\text{SSx}}$ pin control enabled (SSPxCON1<3:0> = 04h). When the $\overline{\text{SSx}}$ pin is low, transmission and reception are enabled and the SDOx pin is driven. When the $\overline{\text{SSx}}$ pin goes high, the SDOx pin is no longer driven, even if in the middle of a transmitted byte and becomes a floating output. External pull-up/pull-down resistors may be desirable depending on the application.

> **Note 1:** When the SPI is in Slave mode with $\overline{\text{SSx}}$ pin control enabled (SSPxCON1<3:0> = `0100`), the SPI module will reset if the $\overline{\text{SSx}}$ pin is set to VDD.
>
> **2:** If the SPI is used in Slave mode with CKE set, then the $\overline{\text{SSx}}$ pin control must be enabled.

When the SPI module resets, the bit counter is forced to '`0`'. This can be done by either forcing the $\overline{\text{SSx}}$ pin to a high level or clearing the SSPEN bit.

To emulate two-wire communication, the SDOx pin can be connected to the SDIx pin. When the SPI needs to operate as a receiver, the SDOx pin can be configured as an input. This disables transmissions from the SDOx. The SDIx can always be left as an input (SDI function) since it cannot create a bus conflict.

FIGURE 19-4: SLAVE SYNCHRONIZATION WAVEFORM

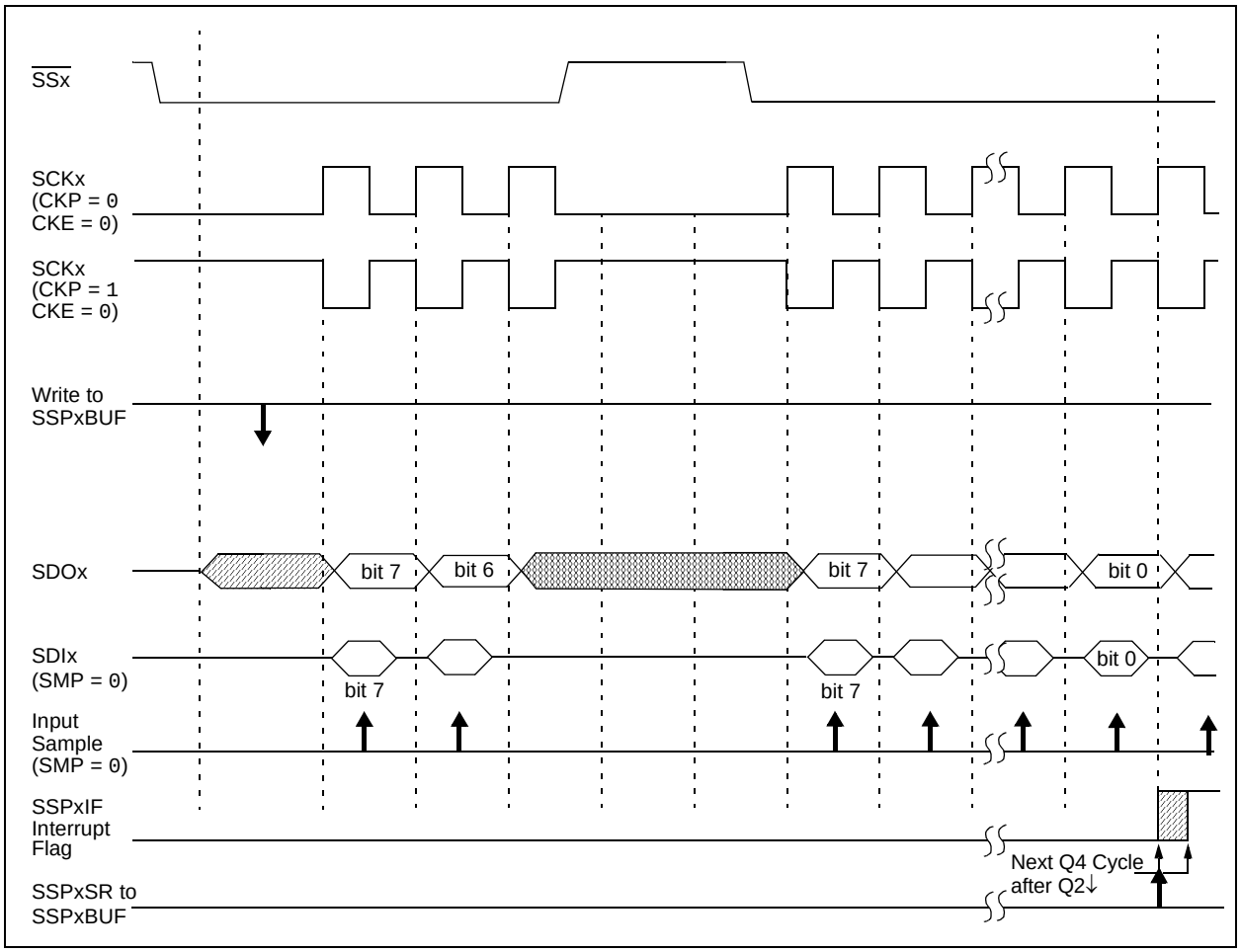

FIGURE 19-5: SPI MODE WAVEFORM (SLAVE MODE WITH CKE = 0)

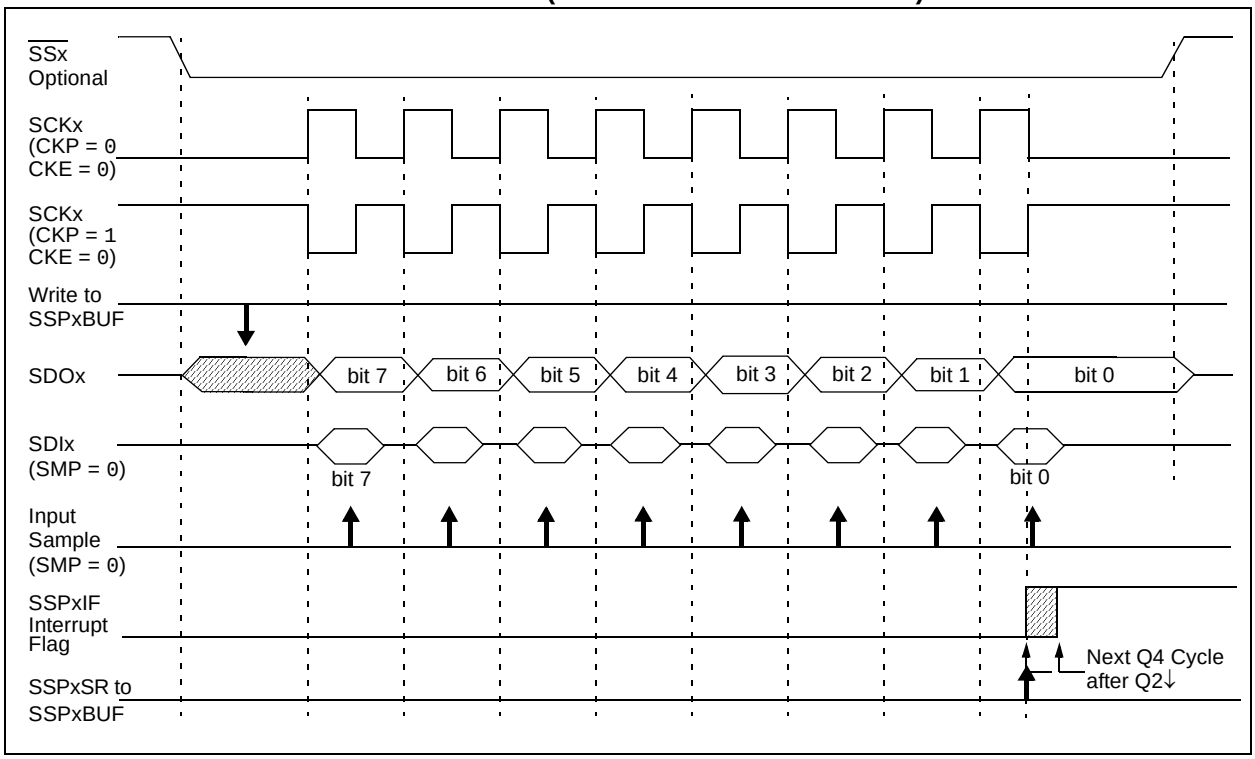

FIGURE 19-6: SPI MODE WAVEFORM (SLAVE MODE WITH CKE = 1)

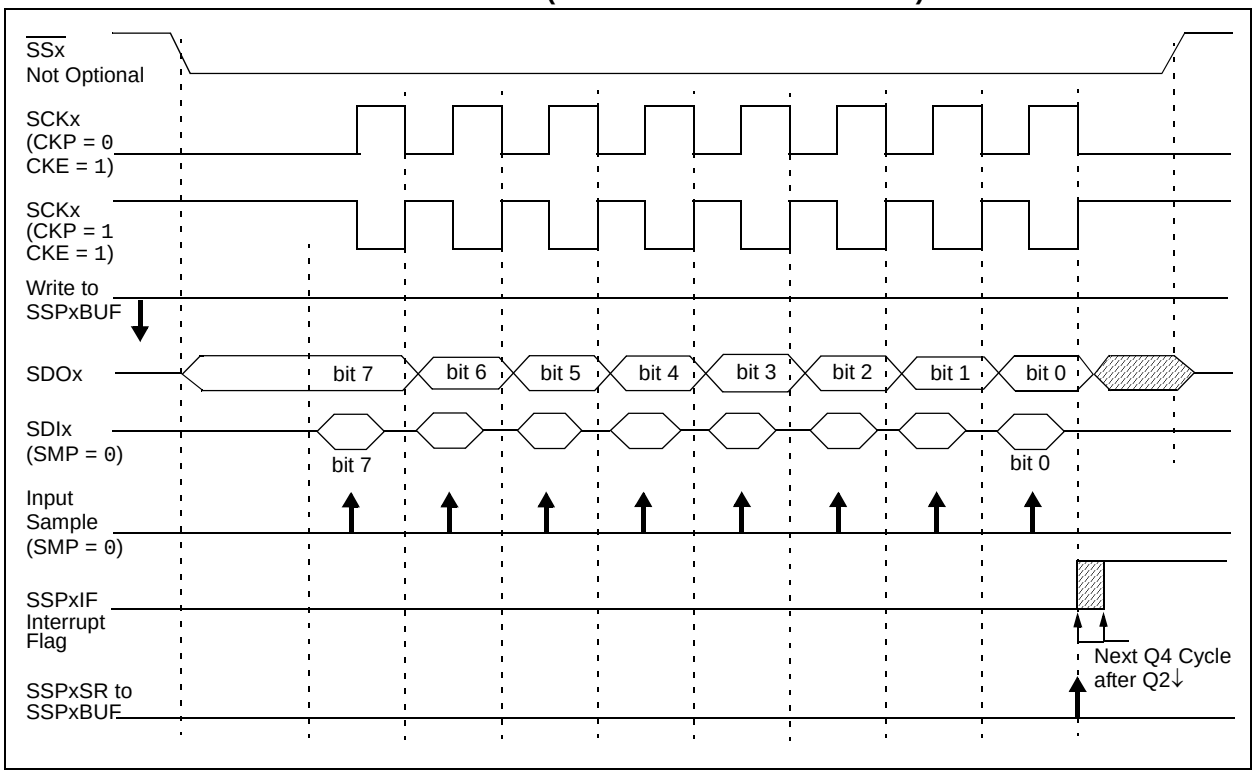

© 2008 Microchip Technology Inc.

19.3.8 OPERATION IN POWER-MANAGED MODES

In SPI Master mode, module clocks may be operating at a different speed than when in full power mode; in the case of the Sleep mode, all clocks are halted.

In Idle modes, a clock is provided to the peripherals. That clock can be from the primary clock source, the secondary clock (Timer1 oscillator) or the INTOSC source. See **Section 2.7 "Clock Sources and Oscillator Switching"** for additional information.

In most cases, the speed that the master clocks SPI data is not important; however, this should be evaluated for each system.

If MSSP interrupts are enabled, they can wake the controller from Sleep mode, or one of the Idle modes, when the master completes sending data. If an exit from Sleep or Idle mode is not desired, MSSP interrupts should be disabled.

If the Sleep mode is selected, all module clocks are halted and the transmission/reception will remain in that state until the devices wakes. After the device returns to Run mode, the module will resume transmitting and receiving data.

In SPI Slave mode, the SPI Transmit/Receive Shift register operates asynchronously to the device. This allows the device to be placed in any power-managed mode and data to be shifted into the SPI Transmit/Receive Shift register. When all 8 bits have been received, the MSSP interrupt flag bit will be set and if enabled, will wake the device.

19.3.9 EFFECTS OF A RESET

A Reset disables the MSSP module and terminates the current transfer.

19.3.10 BUS MODE COMPATIBILITY

Table 19-1 shows the compatibility between the standard SPI modes and the states of the CKP and CKE control bits.

TABLE 19-1: SPI BUS MODES

Standard SPI Mode Terminology	Control Bits State	
	CKP	CKE
0, 0	0	1
0, 1	0	0
1, 0	1	1
1, 1	1	0

There is also an SMP bit which controls when the data is sampled.

19.3.11 SPI CLOCK SPEED AND MODULE INTERACTIONS

Because MSSP1 and MSSP2 are independent modules, they can operate simultaneously at different data rates. Setting the SSPM3:SSPM0 bits of the SSPxCON register determines the rate for the corresponding module.

An exception is when both modules use Timer2 as a time base in Master mode. In this instance, any changes to the Timer2 module's operation will affect both MSSP modules equally. If different bit rates are required for each module, the user should select one of the other three time base options for one of the modules.

TABLE 19-2: REGISTERS ASSOCIATED WITH SPI OPERATION

Name	Bit 7	Bit 6	Bit 5	Bit 4	Bit 3	Bit 2	Bit 1	Bit 0	Reset Values on page
INTCON	GIE/GIEH	PEIE/GIEL	TMR0IE	INT0IE	RBIE	TMR0IF	INT0IF	RBIF	57
PIR1	PSPIF	ADIF	RC1IF	TX1IF	SSP1IF	CCP1IF	TMR2IF	TMR1IF	60
PIE1	PSPIE	ADIE	RC1IE	TX1IE	SSP1IE	CCP1IE	TMR2IE	TMR1IE	60
IPR1	PSPIP	ADIP	RC1IP	TX1IP	SSP1IP	CCP1IP	TMR2IP	TMR1IP	60
PIR3	SSP2IF	BCL2IF	RC2IF	TX2IF	TMR4IF	CCP5IF	CCP4IF	CCP3IF	60
PIE3	SSP2IE	BCL2IE	RC2IE	TX2IE	TMR4IE	CCP5IE	CCP4IE	CCP3IE	60
IPR3	SSP2IP	BCL2IP	RC2IP	TX2IP	TMR4IP	CCP5IP	CCP4IP	CCP3IP	60
TRISC	TRISC7	TRISC6	TRISC5	TRISC4	TRISC3	TRISC2	TRISC1	TRISC0	60
TRISD	TRISD7	TRISD6	TRISD5	TRISD4	TRISD3	TRISD2	TRISD1	TRISD0	60
TRISF	TRISF7	TRISF6	TRISF5	TRISF4	TRISF3	TRISF2	TRISF1	TRISF0	60
TMR2	Timer2 Register								58
PR2	Timer2 Period Register								58
SSP1BUF	MSSP1 Receive Buffer/Transmit Register								58
SSP1CON1	WCOL	SSPOV	SSPEN	CKP	SSPM3	SSPM2	SSPM1	SSPM0	58
SSP1STAT	SMP	CKE	D/$\overline{A}$	P	S	R/$\overline{W}$	UA	BF	58
SSP2BUF	MSSP2 Receive Buffer/Transmit Register								61
SSP2CON1	WCOL	SSPOV	SSPEN	CKP	SSPM3	SSPM2	SSPM1	SSPM0	61
SSP2STAT	SMP	CKE	D/$\overline{A}$	P	S	R/$\overline{W}$	UA	BF	61

Legend: Shaded cells are not used by the MSSP module in SPI mode.

© 2008 Microchip Technology Inc.

19.4 I²C Mode

The MSSP module in I²C mode fully implements all master and slave functions (including general call support) and provides interrupts on Start and Stop bits in hardware to determine a free bus (multi-master function). The MSSP module implements the standard mode specifications, as well as 7-bit and 10-bit addressing.

Two pins are used for data transfer:

- Serial clock (SCLx) – RC3/SCK1/SCL1 or RD6/SCK2/SCL2
- Serial data (SDAx) – RC4/SDI1/SDA1 or RD5/SDI2/SDA2

The user must configure these pins as inputs by setting the associated TRIS bits.

FIGURE 19-7: MSSP BLOCK DIAGRAM (I²C™ MODE)

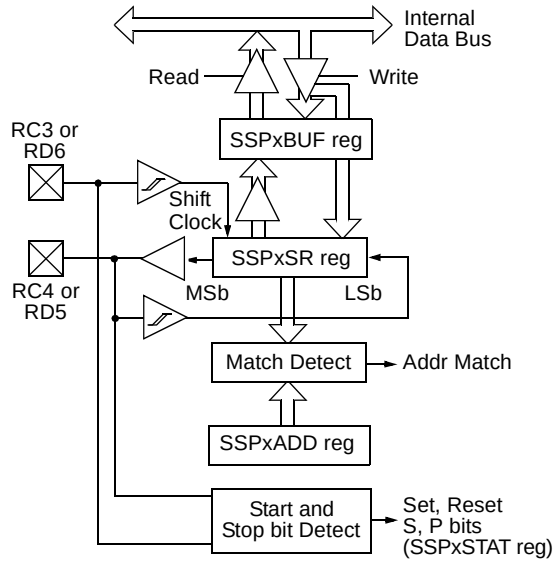

Note: Only port I/O names are used in this diagram for the sake of brevity. Refer to the text for a full list of multiplexed functions.

REGISTER 19-3: SSPxSTAT: MSSPx STATUS REGISTER (I^2C™ MODE)

R/W-0	R/W-0	R-0	R-0	R-0	R-0	R-0	R-0
SMP	CKE	D/$\overline{A}$	P(1)	S(1)	R/$\overline{W}$(2,3)	UA	BF
bit 7							bit 0

Legend:			
R = Readable bit	W = Writable bit	U = Unimplemented bit, read as ‘0’	
-n = Value at POR	‘1’ = Bit is set	‘0’ = Bit is cleared	x = Bit is unknown

bit 7 **SMP:** Slew Rate Control bit

In Master or Slave mode:
1 = Slew rate control disabled for Standard Speed mode (100 kHz and 1 MHz)
0 = Slew rate control enabled for High-Speed mode (400 kHz)

bit 6 **CKE:** SMBus Select bit

In Master or Slave mode:
1 = Enable SMBus specific inputs
0 = Disable SMBus specific inputs

bit 5 **D/$\overline{A}$:** Data/$\overline{\text{Address}}$ bit

In Master mode:
Reserved.

In Slave mode:
1 = Indicates that the last byte received or transmitted was data
0 = Indicates that the last byte received or transmitted was address

bit 4 **P:** Stop bit(1)

1 = Indicates that a Stop bit has been detected last
0 = Stop bit was not detected last

bit 3 **S:** Start bit(1)

1 = Indicates that a Start bit has been detected last
0 = Start bit was not detected last

bit 2 **R/$\overline{W}$:** Read/$\overline{\text{Write}}$ Information bit(2,3)

In Slave mode:
1 = Read
0 = Write

In Master mode:
1 = Transmit is in progress
0 = Transmit is not in progress

bit 1 **UA:** Update Address bit (10-bit Slave mode only)

1 = Indicates that the user needs to update the address in the SSPxADD register
0 = Address does not need to be updated

bit 0 **BF:** Buffer Full Status bit

In Transmit mode:
1 = SSPxBUF is full
0 = SSPxBUF is empty

In Receive mode:
1 = SSPxBUF is full (does not include the $\overline{\text{ACK}}$ and Stop bits)
0 = SSPxBUF is empty (does not include the $\overline{\text{ACK}}$ and Stop bits)

Note 1: This bit is cleared on Reset and when SSPEN is cleared.

2: This bit holds the R/$\overline{W}$ bit information following the last address match. This bit is only valid from the address match to the next Start bit, Stop bit or not $\overline{\text{ACK}}$ bit.

3: ORing this bit with SEN, RSEN, PEN, RCEN or ACKEN will indicate if the MSSP is in Active mode.

© 2008 Microchip Technology Inc.

REGISTER 19-4: SSPxCON1: MSSPx CONTROL REGISTER 1 (I^2C™ MODE)

R/W-0	R/W-0	R/W-0	R/W-0	R/W-0	R/W-0	R/W-0	R/W-0
WCOL	SSPOV	SSPEN(1)	CKP	SSPM3	SSPM2	SSPM1	SSPM0
bit 7							bit 0

Legend:			
R = Readable bit	W = Writable bit	U = Unimplemented bit, read as ‘0’	
-n = Value at POR	‘1’ = Bit is set	‘0’ = Bit is cleared	x = Bit is unknown

bit 7 **WCOL:** Write Collision Detect bit

In Master Transmit mode:
1 = A write to the SSPxBUF register was attempted while the I^2C™ conditions were not valid for a transmission to be started (must be cleared in software)
0 = No collision

In Slave Transmit mode:
1 = The SSPxBUF register is written while it is still transmitting the previous word (must be cleared in software)
0 = No collision

In Receive mode (Master or Slave modes):
This is a “don’t care” bit.

bit 6 **SSPOV:** Receive Overflow Indicator bit

In Receive mode:
1 = A byte is received while the SSPxBUF register is still holding the previous byte (must be cleared in software)
0 = No overflow

In Transmit mode:
This is a “don’t care” bit in Transmit mode.

bit 5 **SSPEN:** Synchronous Serial Port Enable bit(1)

1 = Enables the serial port and configures the SDAx and SCLx pins as the serial port pins
0 = Disables serial port and configures these pins as I/O port pins

bit 4 **CKP:** SCKx Release Control bit

In Slave mode:
1 = Release clock
0 = Holds clock low (clock stretch), used to ensure data setup time

In Master mode:
Unused in this mode.

bit 3-0 **SSPM<3:0>:** Synchronous Serial Port Mode Select bits

1111 = I^2C Slave mode, 10-bit address with Start and Stop bit interrupts enabled
1110 = I^2C Slave mode, 7-bit address with Start and Stop bit interrupts enabled
1011 = I^2C Firmware Controlled Master mode (Slave Idle)
1000 = I^2C Master mode, clock = FOSC/(4 * (SSPxADD + 1))
0111 = I^2C Slave mode, 10-bit address
0110 = I^2C Slave mode, 7-bit address

Bit combinations not specifically listed here are either reserved or implemented in SPI mode only.

Note 1: When enabled, the SDAx and SCLx pins must be configured as input.

REGISTER 19-5: SSPxCON2: MSSPx CONTROL REGISTER 2 (I^2C™ MODE)

R/W-0	R/W-0	R/W-0	R/W-0	R/W-0	R/W-0	R/W-0	R/W-0
GCEN	ACKSTAT	ACKDT(1)	ACKEN(2)	RCEN(2)	PEN(2)	RSEN(2)	SEN(2)
bit 7							bit 0

Legend:			
R = Readable bit	W = Writable bit	U = Unimplemented bit, read as ‘0’	
-n = Value at POR	‘1’ = Bit is set	‘0’ = Bit is cleared	x = Bit is unknown

bit 7 **GCEN:** General Call Enable bit (Slave mode only)
1 = Enable interrupt when a general call address (0000h) is received in the SSPxSR
0 = General call address disabled

bit 6 **ACKSTAT:** Acknowledge Status bit (Master Transmit mode only)
1 = Acknowledge was not received from slave
0 = Acknowledge was received from slave

bit 5 **ACKDT:** Acknowledge Data bit (Master Receive mode only)(1)
1 = Not Acknowledge
0 = Acknowledge

bit 4 **ACKEN:** Acknowledge Sequence Enable bit (Master Receive mode only)(2)
1 = Initiate Acknowledge sequence on SDAx and SCLx pins and transmit ACKDT data bit. Automatically cleared by hardware.
0 = Acknowledge sequence Idle

bit 3 **RCEN:** Receive Enable bit (Master mode only)(2)
1 = Enables Receive mode for I^2C
0 = Receive Idle

bit 2 **PEN:** Stop Condition Enable bit (Master mode only)(2)
1 = Initiate Stop condition on SDAx and SCLx pins. Automatically cleared by hardware.
0 = Stop condition Idle

bit 1 **RSEN:** Repeated Start Condition Enable bit (Master mode only)(2)
1 = Initiate Repeated Start condition on SDAx and SCLx pins. Automatically cleared by hardware.
0 = Repeated Start condition Idle

bit 0 **SEN:** Start Condition Enable/Stretch Enable bit(2)
In Master mode:
1 = Initiate Start condition on SDAx and SCLx pins. Automatically cleared by hardware.
0 = Start condition Idle
In Slave mode:
1 = Clock stretching is enabled for both slave transmit and slave receive (stretch enabled)
0 = Clock stretching is disabled

Note 1: Value that will be transmitted when the user initiates an Acknowledge sequence at the end of a receive.
2: For bits ACKEN, RCEN, PEN, RSEN, SEN: If the I^2C™ module is active, these bits may not be set (no spooling) and the SSPxBUF may not be written (or writes to the SSPxBUF are disabled).

© 2008 Microchip Technology Inc.

19.4.2 OPERATION

The MSSP module functions are enabled by setting MSSP Enable bit, SSPEN (SSPxCON1<5>).

The SSPxCON1 register allows control of the I^2C operation. Four mode selection bits (SSPxCON1<3:0>) allow one of the following I^2C modes to be selected:

- I^2C Master mode, clock
- I^2C Slave mode (7-bit address)
- I^2C Slave mode (10-bit address)
- I^2C Slave mode (7-bit address) with Start and Stop bit interrupts enabled
- I^2C Slave mode (10-bit address) with Start and Stop bit interrupts enabled
- I^2C Firmware Controlled Master mode, slave is Idle

Selection of any I^2C mode with the SSPEN bit set forces the SCLx and SDAx pins to be open-drain, provided these pins are programmed as inputs by setting the appropriate TRISC or TRISD bits. To ensure proper operation of the module, pull-up resistors must be provided externally to the SCLx and SDAx pins.

19.4.3 SLAVE MODE

In Slave mode, the SCLx and SDAx pins must be configured as inputs (TRISC<4:3> set). The MSSP module will override the input state with the output data when required (slave-transmitter).

The I^2C Slave mode hardware will always generate an interrupt on an address match. Through the mode select bits, the user can also choose to interrupt on Start and Stop bits

When an address is matched, or the data transfer after an address match is received, the hardware automatically will generate the Acknowledge ($\overline{ACK}$) pulse and load the SSPxBUF register with the received value currently in the SSPxSR register.

Any combination of the following conditions will cause the MSSP module not to give this $\overline{ACK}$ pulse:

- The Buffer Full bit, BF (SSPxSTAT<0>), was set before the transfer was received.
- The overflow bit, SSPOV (SSPxCON1<6>), was set before the transfer was received.

In this case, the SSPxSR register value is not loaded into the SSPxBUF, but bit SSPxIF is set. The BF bit is cleared by reading the SSPxBUF register, while bit SSPOV is cleared through software.

The SCLx clock input must have a minimum high and low for proper operation. The high and low times of the I^2C specification, as well as the requirement of the MSSP module, are shown in timing parameter 100 and parameter 101.

19.4.3.1 Addressing

Once the MSSP module has been enabled, it waits for a Start condition to occur. Following the Start condition, the 8 bits are shifted into the SSPxSR register. All incoming bits are sampled with the rising edge of the clock (SCLx) line. The value of register SSPxSR<7:1> is compared to the value of the SSPxADD register. The address is compared on the falling edge of the eighth clock (SCLx) pulse. If the addresses match and the BF and SSPOV bits are clear, the following events occur:

1. The SSPxSR register value is loaded into the SSPxBUF register.
2. The Buffer Full bit, BF, is set.
3. An $\overline{ACK}$ pulse is generated.
4. The MSSP Interrupt Flag bit, SSPxIF, is set (and interrupt is generated, if enabled) on the falling edge of the ninth SCLx pulse.

In 10-Bit Addressing mode, two address bytes need to be received by the slave. The five Most Significant bits (MSbs) of the first address byte specify if this is a 10-bit address. Bit R/$\overline{W}$ (SSPxSTAT<2>) must specify a write so the slave device will receive the second address byte. For a 10-bit address, the first byte would equal ‘11110 A9 A8 0’, where ‘A9’ and ‘A8’ are the two MSbs of the address. The sequence of events for 10-bit address is as follows, with steps 7 through 9 for the slave-transmitter:

1. Receive first (high) byte of address (bits SSPxIF, BF and UA (SSPxSTAT<1>) are set on address match).
2. Update the SSPxADD register with second (low) byte of address (clears bit UA and releases the SCLx line).
3. Read the SSPxBUF register (clears bit BF) and clear flag bit SSPxIF.
4. Receive second (low) byte of address (bits SSPxIF, BF and UA are set).
5. Update the SSPxADD register with the first (high) byte of address. If match releases SCLx line, this will clear bit UA.
6. Read the SSPxBUF register (clears bit BF) and clear flag bit SSPxIF.
7. Receive Repeated Start condition.
8. Receive first (high) byte of address (bits SSPxIF and BF are set).
9. Read the SSPxBUF register (clears bit BF) and clear flag bit SSPxIF.

© 2008 Microchip Technology Inc.

19.4.3.2 Reception

When the R/$\overline{W}$ bit of the address byte is clear and an address match occurs, the R/$\overline{W}$ bit of the SSPxSTAT register is cleared. The received address is loaded into the SSPxBUF register and the SDAx line is held low ($\overline{ACK}$).

When the address byte overflow condition exists, then the no Acknowledge ($\overline{ACK}$) pulse is given. An overflow condition is defined as either bit BF (SSPxSTAT<0>) is set, or bit SSPOV (SSPxCON1<6>) is set.

An MSSP interrupt is generated for each data transfer byte. The interrupt flag bit, SSPxIF, must be cleared in software. The SSPxSTAT register is used to determine the status of the byte.

If SEN is enabled (SSPxCON2<0> = 1), SCLx will be held low (clock stretch) following each data transfer. The clock must be released by setting bit, CKP (SSPxCON1<4>). See **Section 19.4.4 “Clock Stretching”** for more detail.

19.4.3.3 Transmission

When the R/$\overline{W}$ bit of the incoming address byte is set and an address match occurs, the R/$\overline{W}$ bit of the SSPxSTAT register is set. The received address is loaded into the SSPxBUF register. The $\overline{ACK}$ pulse will be sent on the ninth bit and pin SCLx is held low regardless of SEN (see **Section 19.4.4 “Clock Stretching”** for more detail). By stretching the clock, the master will be unable to assert another clock pulse until the slave is done preparing the transmit data. The transmit data must be loaded into the SSPxBUF register which also loads the SSPxSR register. Then pin SCLx should be enabled by setting bit, CKP (SSPxCON1<4>). The eight data bits are shifted out on the falling edge of the SCLx input. This ensures that the SDAx signal is valid during the SCLx high time (Figure 19-9).

The $\overline{ACK}$ pulse from the master-receiver is latched on the rising edge of the ninth SCLx input pulse. If the SDAx line is high (not $\overline{ACK}$), then the data transfer is complete. In this case, when the $\overline{ACK}$ is latched by the slave, the slave logic is reset (resets SSPxSTAT register) and the slave monitors for another occurrence of the Start bit. If the SDAx line was low ($\overline{ACK}$), the next transmit data must be loaded into the SSPxBUF register. Again, pin SCLx must be enabled by setting bit CKP.

An MSSP interrupt is generated for each data transfer byte. The SSPxIF bit must be cleared in software and the SSPxSTAT register is used to determine the status of the byte. The SSPxIF bit is set on the falling edge of the ninth clock pulse.

© 2008 Microchip Technology Inc.

FIGURE 19-8: I²C™ SLAVE MODE TIMING WITH SEN = 0 (RECEPTION, 7-BIT ADDRESS)

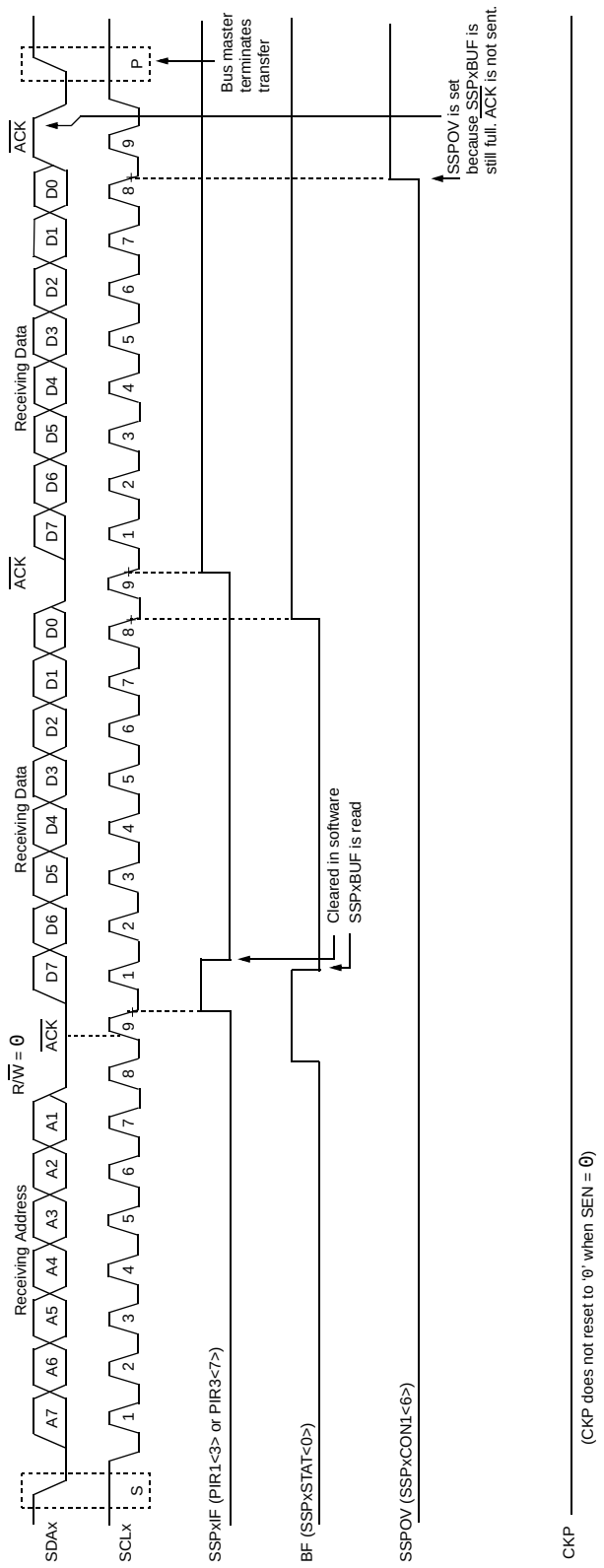

FIGURE 19-9: I²C™ SLAVE MODE TIMING (TRANSMISSION, 7-BIT ADDRESS)

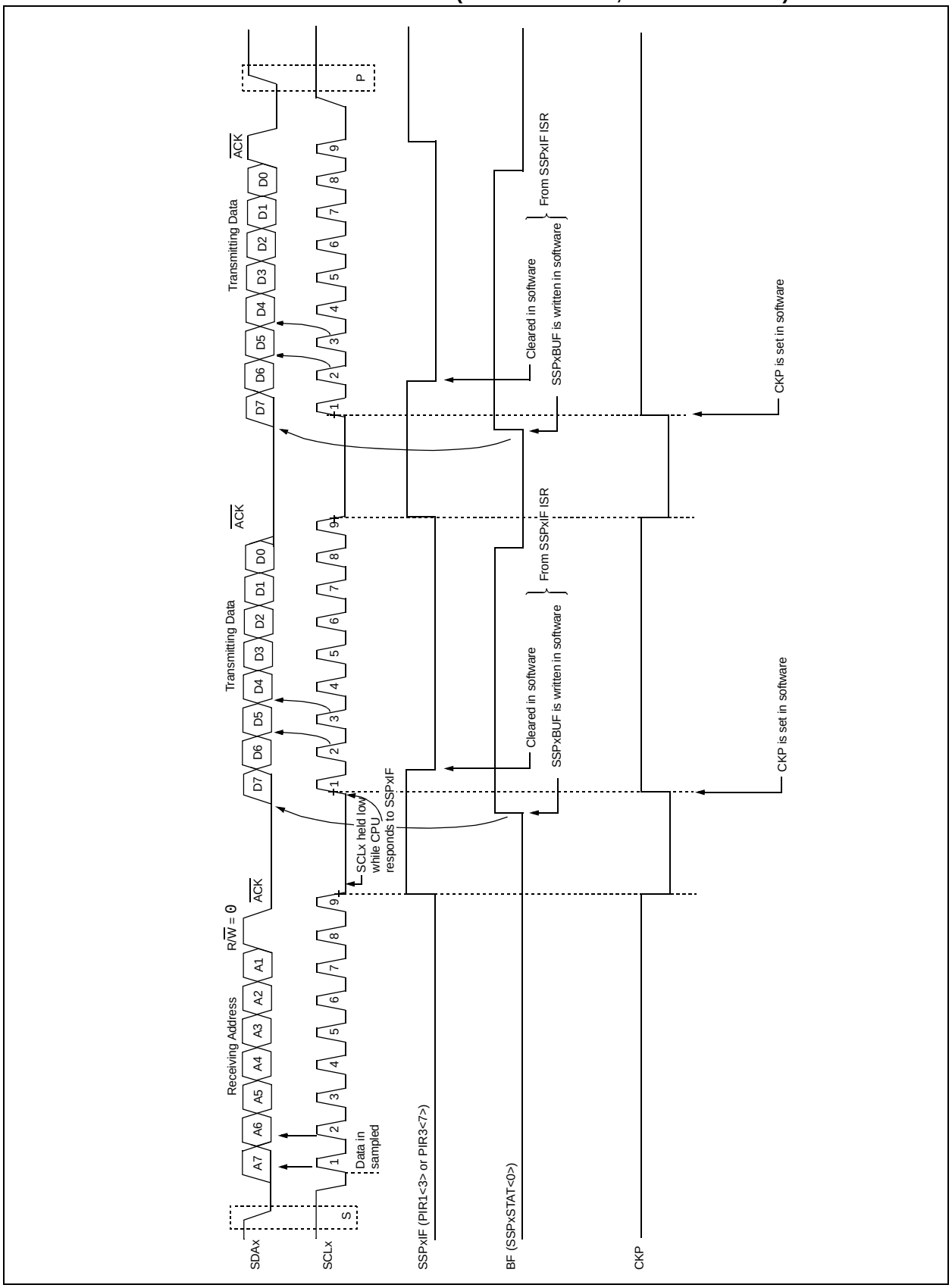

© 2008 Microchip Technology Inc.

FIGURE 19-10: I²C™ SLAVE MODE TIMING WITH SEN = 0 (RECEPTION, 10-BIT ADDRESS)

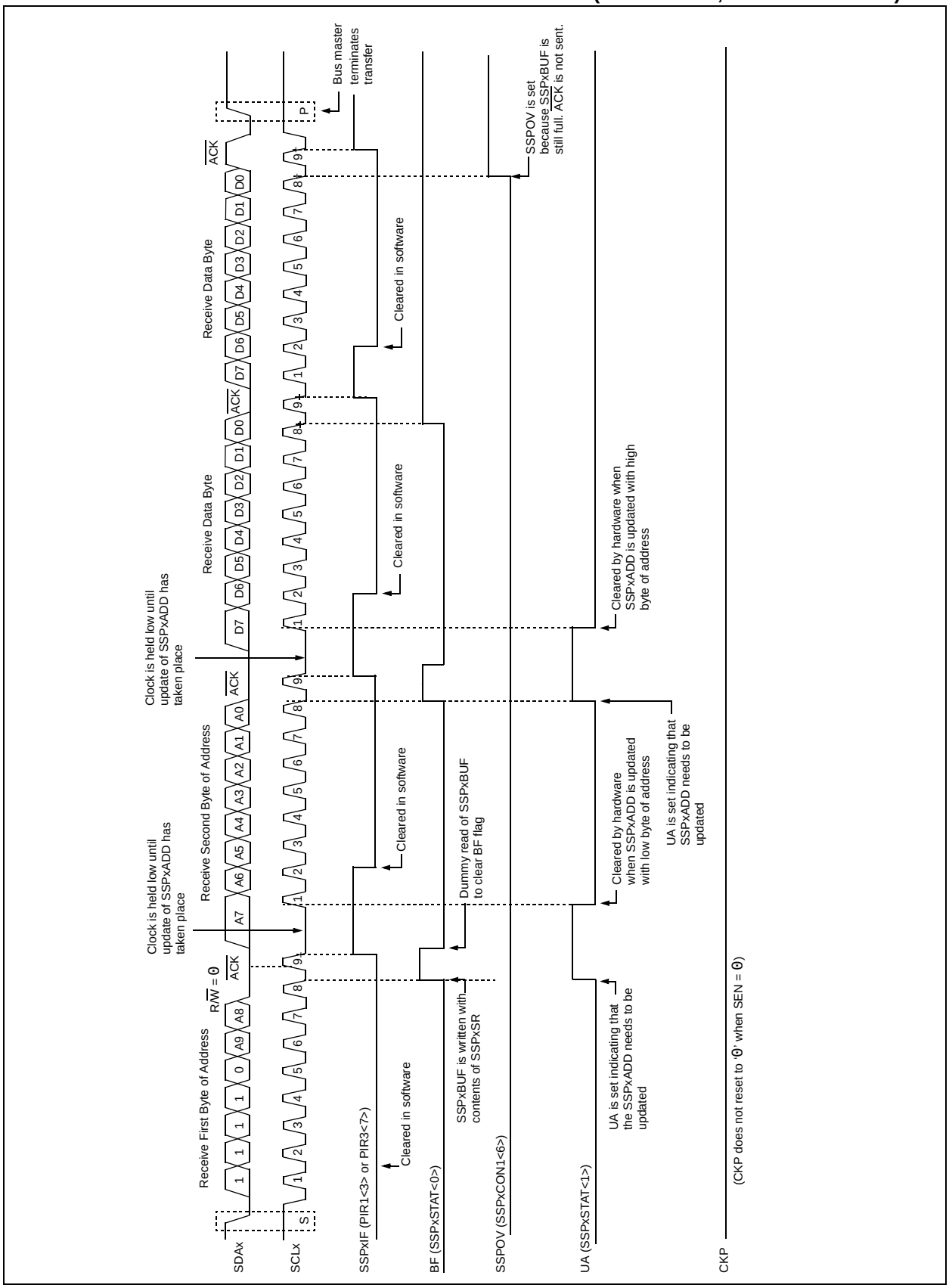

FIGURE 19-11: I²C™ SLAVE MODE TIMING (TRANSMISSION, 10-BIT ADDRESS)

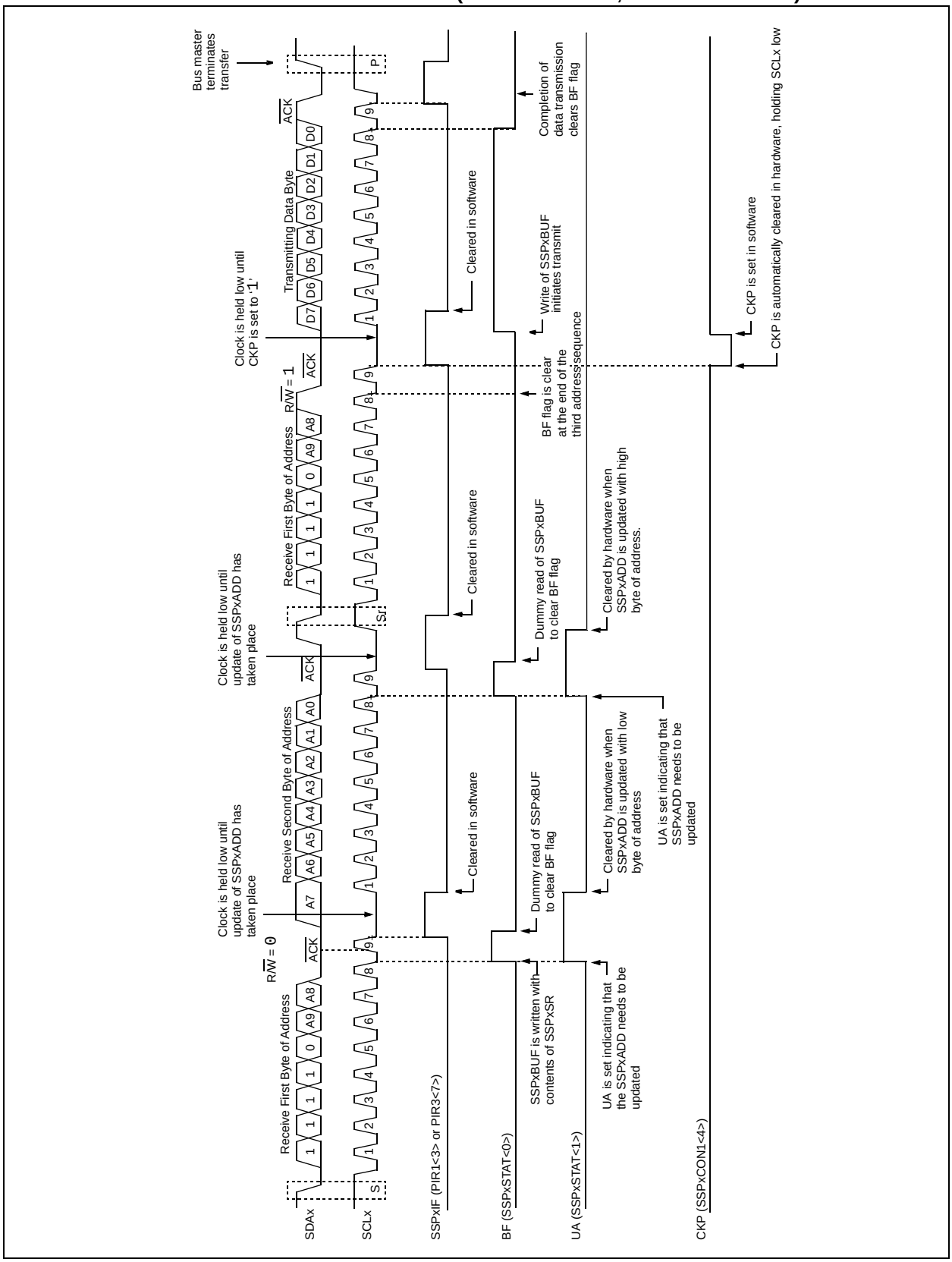

© 2008 Microchip Technology Inc.

19.4.4 CLOCK STRETCHING

Both 7-Bit and 10-Bit Slave modes implement automatic clock stretching during a transmit sequence.

The SEN bit (SSPxCON2<0>) allows clock stretching to be enabled during receives. Setting SEN will cause the SCLx pin to be held low at the end of each data receive sequence.

19.4.4.1 Clock Stretching for 7-Bit Slave Receive Mode (SEN = 1)

In 7-Bit Slave Receive mode, on the falling edge of the ninth clock at the end of the $\overline{\text{ACK}}$ sequence, if the BF bit is set, the CKP bit in the SSPxCON1 register is automatically cleared, forcing the SCLx output to be held low. The CKP being cleared to '0' will assert the SCLx line low. The CKP bit must be set in the user's ISR before reception is allowed to continue. By holding the SCLx line low, the user has time to service the ISR and read the contents of the SSPxBUF before the master device can initiate another receive sequence. This will prevent buffer overruns from occurring (see Figure 19-13).

Note 1:	If the user reads the contents of the SSPxBUF before the falling edge of the ninth clock, thus clearing the BF bit, the CKP bit will not be cleared and clock stretching will not occur.
2:	The CKP bit can be set in software regardless of the state of the BF bit. The user should be careful to clear the BF bit in the ISR before the next receive sequence in order to prevent an overflow condition.

19.4.4.2 Clock Stretching for 10-Bit Slave Receive Mode (SEN = 1)

In 10-Bit Slave Receive mode during the address sequence, clock stretching automatically takes place but CKP is not cleared. During this time, if the UA bit is set after the ninth clock, clock stretching is initiated. The UA bit is set after receiving the upper byte of the 10-bit address and following the receive of the second byte of the 10-bit address with the R/$\overline{\text{W}}$ bit cleared to '0'. The release of the clock line occurs upon updating SSPxADD. Clock stretching will occur on each data receive sequence as described in 7-bit mode.

Note:	If the user polls the UA bit and clears it by updating the SSPxADD register before the falling edge of the ninth clock occurs and if the user hasn't cleared the BF bit by reading the SSPxBUF register before that time, then the CKP bit will still NOT be asserted low. Clock stretching on the basis of the state of the BF bit only occurs during a data sequence, not an address sequence.

19.4.4.3 Clock Stretching for 7-Bit Slave Transmit Mode

The 7-Bit Slave Transmit mode implements clock stretching by clearing the CKP bit after the falling edge of the ninth clock if the BF bit is clear. This occurs regardless of the state of the SEN bit.

The user's ISR must set the CKP bit before transmission is allowed to continue. By holding the SCLx line low, the user has time to service the ISR and load the contents of the SSPxBUF before the master device can initiate another transmit sequence (see Figure 19-9).

Note 1:	If the user loads the contents of SSPxBUF, setting the BF bit before the falling edge of the ninth clock, the CKP bit will not be cleared and clock stretching will not occur.
2:	The CKP bit can be set in software regardless of the state of the BF bit.

19.4.4.4 Clock Stretching for 10-Bit Slave Transmit Mode

In 10-Bit Slave Transmit mode, clock stretching is controlled during the first two address sequences by the state of the UA bit, just as it is in 10-Bit Slave Receive mode. The first two addresses are followed by a third address sequence which contains the high-order bits of the 10-bit address and the R/$\overline{\text{W}}$ bit set to '1'. After the third address sequence is performed, the UA bit is not set, the module is now configured in Transmit mode and clock stretching is controlled by the BF flag as in 7-Bit Slave Transmit mode (see Figure 19-11).

19.4.4.5 Clock Synchronization and the CKP bit

When the CKP bit is cleared, the SCLx output is forced to '0'. However, clearing the CKP bit will not assert the SCLx output low until the SCLx output is already sampled low. Therefore, the CKP bit will not assert the SCLx line until an external I^2C master device has already asserted the SCLx line. The SCLx output will remain low until the CKP bit is set and all other devices on the I^2C bus have deasserted SCLx. This ensures that a write to the CKP bit will not violate the minimum high time requirement for SCLx (see Figure 19-12).

FIGURE 19-12: CLOCK SYNCHRONIZATION TIMING

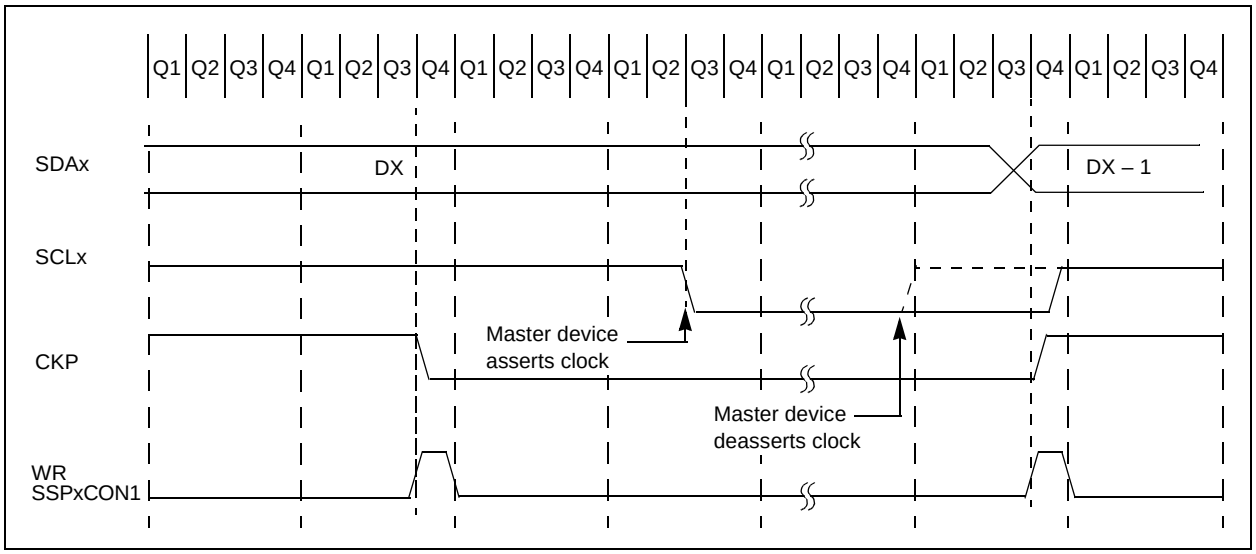

© 2008 Microchip Technology Inc.

FIGURE 19-13: I²C™ SLAVE MODE TIMING WITH SEN = 1 (RECEPTION, 7-BIT ADDRESS)

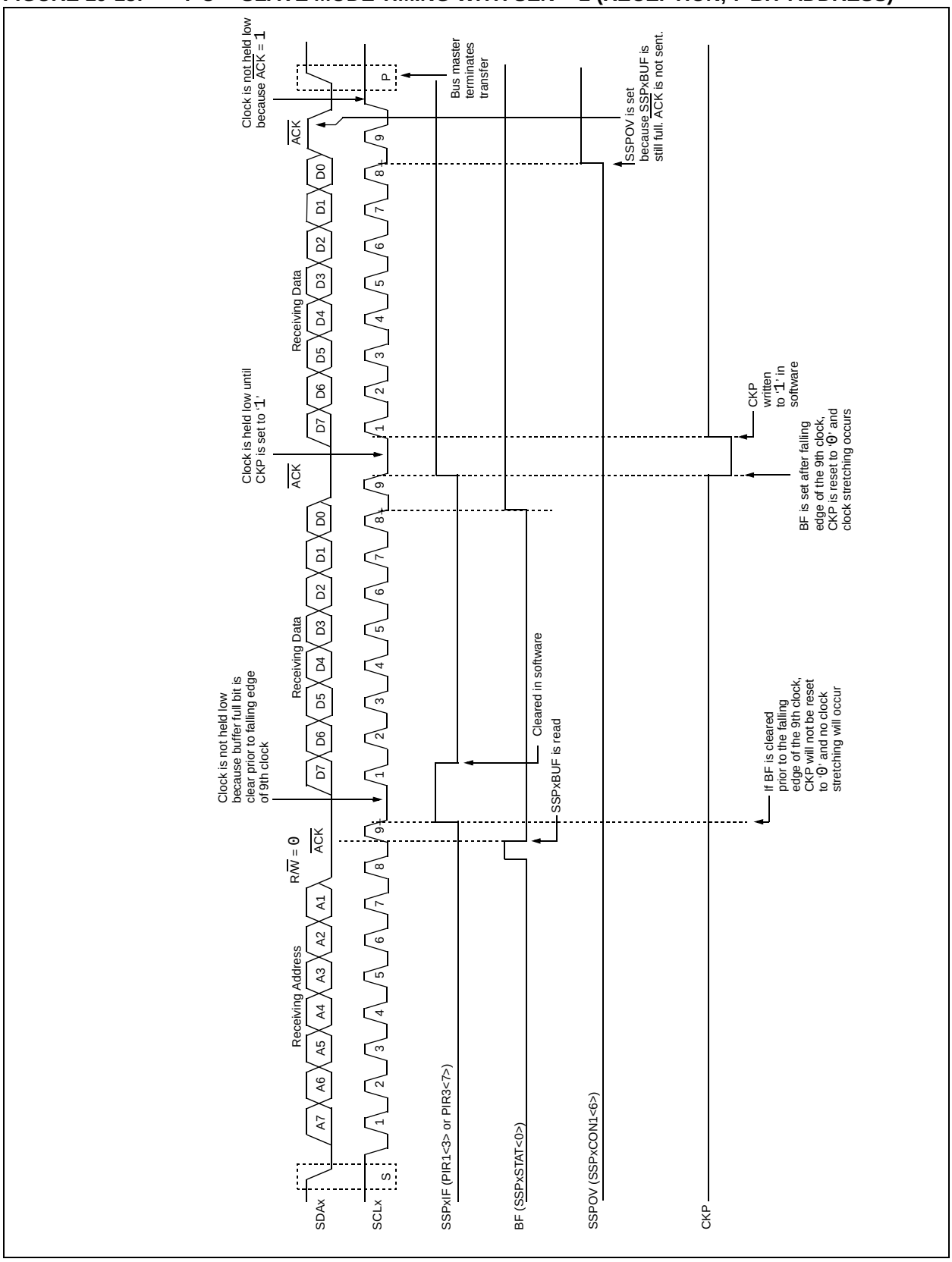

FIGURE 19-14: I²C™ SLAVE MODE TIMING WITH SEN = 1 (RECEPTION, 10-BIT ADDRESS)

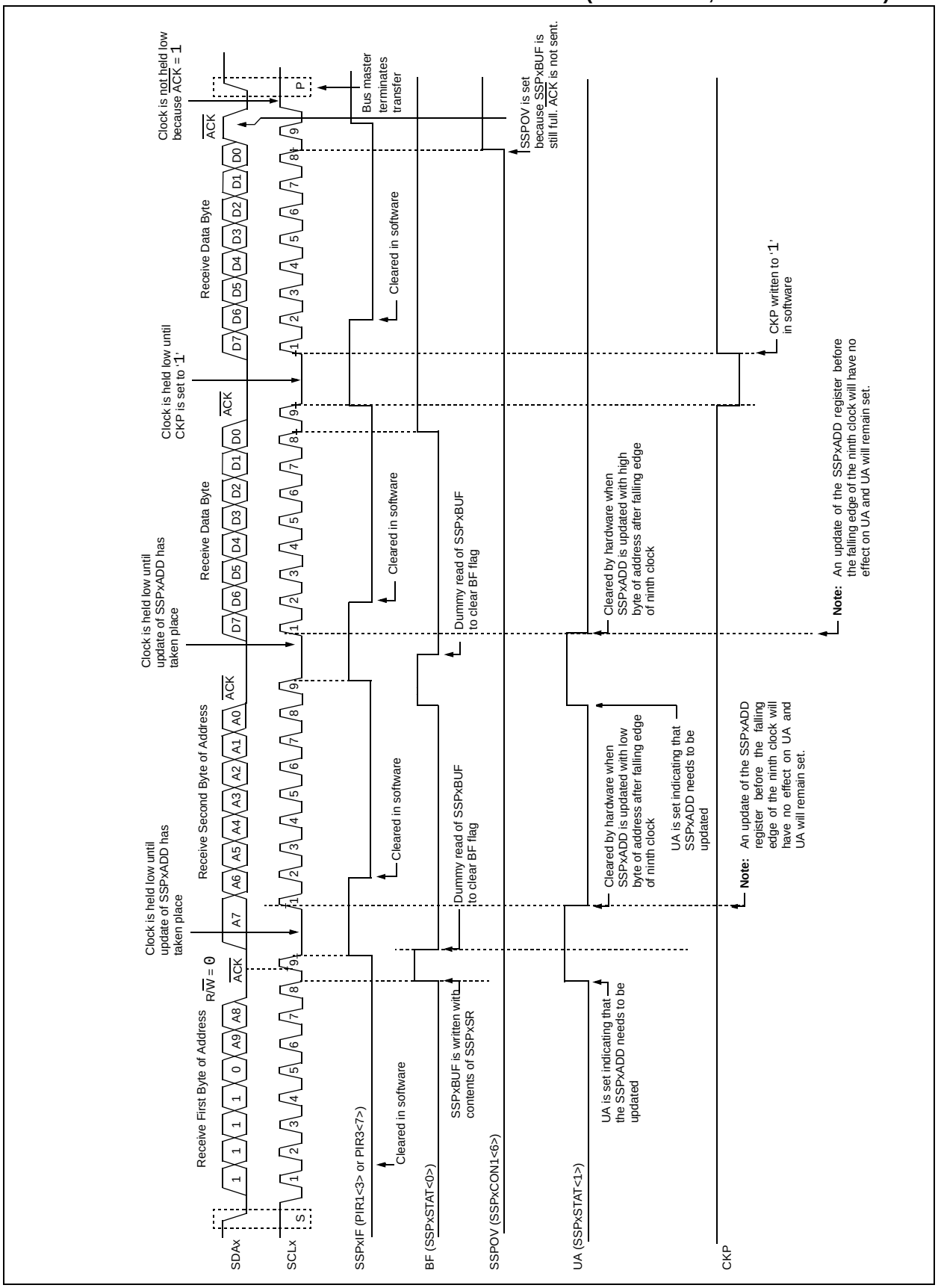

© 2008 Microchip Technology Inc.

19.4.5 GENERAL CALL ADDRESS SUPPORT

The addressing procedure for the I^2C bus is such that the first byte after the Start condition usually determines which device will be the slave addressed by the master. The exception is the general call address which can address all devices. When this address is used, all devices should, in theory, respond with an Acknowledge.

The general call address is one of eight addresses reserved for specific purposes by the I^2C protocol. It consists of all '0's with R/$\overline{W}$ = 0.

The general call address is recognized when the General Call Enable bit, GCEN, is enabled (SSPxCON2<7> set). Following a Start bit detect, 8 bits are shifted into the SSPxSR and the address is compared against the SSPxADD. It is also compared to the general call address and fixed in hardware.

If the general call address matches, the SSPxSR is transferred to the SSPxBUF, the BF flag bit is set (eighth bit) and on the falling edge of the ninth bit ($\overline{ACK}$ bit), the SSPxIF interrupt flag bit is set.

When the interrupt is serviced, the source for the interrupt can be checked by reading the contents of the SSPxBUF. The value can be used to determine if the address was device specific or a general call address.

In 10-bit mode, the SSPxADD is required to be updated for the second half of the address to match and the UA bit is set (SSPxSTAT<1>). If the general call address is sampled when the GCEN bit is set, while the slave is configured in 10-Bit Addressing mode, then the second half of the address is not necessary, the UA bit will not be set and the slave will begin receiving data after the Acknowledge (Figure 19-15).

FIGURE 19-15: SLAVE MODE GENERAL CALL ADDRESS SEQUENCE (7 OR 10-BIT ADDRESS MODE)

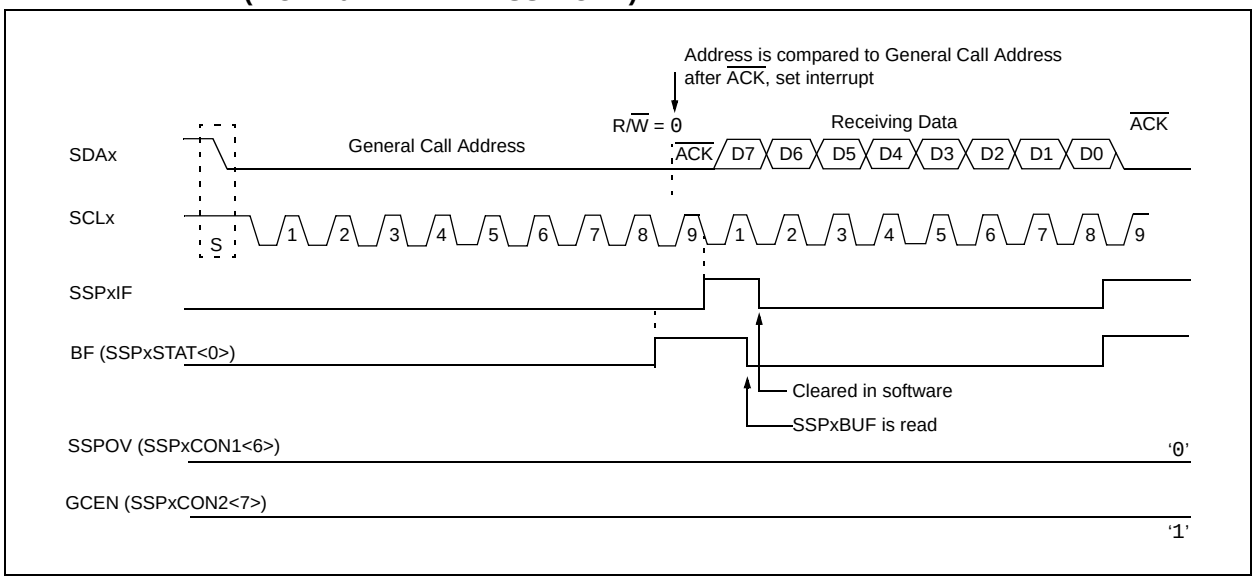

19.4.6 MASTER MODE

Master mode is enabled by setting and clearing the appropriate SSPM bits in SSPxCON1 and by setting the SSPEN bit. In Master mode, the SCLx and SDAx lines are manipulated by the MSSP hardware if the TRIS bits are set.

Master mode of operation is supported by interrupt generation on the detection of the Start and Stop conditions. The Stop (P) and Start (S) bits are cleared from a Reset or when the MSSP module is disabled. Control of the I^2C bus may be taken when the P bit is set, or the bus is Idle, with both the S and P bits clear.

In Firmware Controlled Master mode, user code conducts all I^2C bus operations based on Start and Stop bit conditions.

Once Master mode is enabled, the user has six options.

1. Assert a Start condition on SDAx and SCLx.
2. Assert a Repeated Start condition on SDAx and SCLx.
3. Write to the SSPxBUF register initiating transmission of data/address.
4. Configure the I^2C port to receive data.
5. Generate an Acknowledge condition at the end of a received byte of data.
6. Generate a Stop condition on SDAx and SCLx.

> **Note:** The MSSP module, when configured in I^2C Master mode, does not allow queueing of events. For instance, the user is not allowed to initiate a Start condition and immediately write the SSPxBUF register to initiate transmission before the Start condition is complete. In this case, the SSPxBUF will not be written to and the WCOL bit will be set, indicating that a write to the SSPxBUF did not occur.

The following events will cause the SSP Interrupt Flag bit, SSPxIF, to be set (and SSP interrupt, if enabled):

- Start condition
- Stop condition
- Data transfer byte transmitted/received
- Acknowledge transmit
- Repeated Start

FIGURE 19-16: MSSP BLOCK DIAGRAM (I^2C™ MASTER MODE)

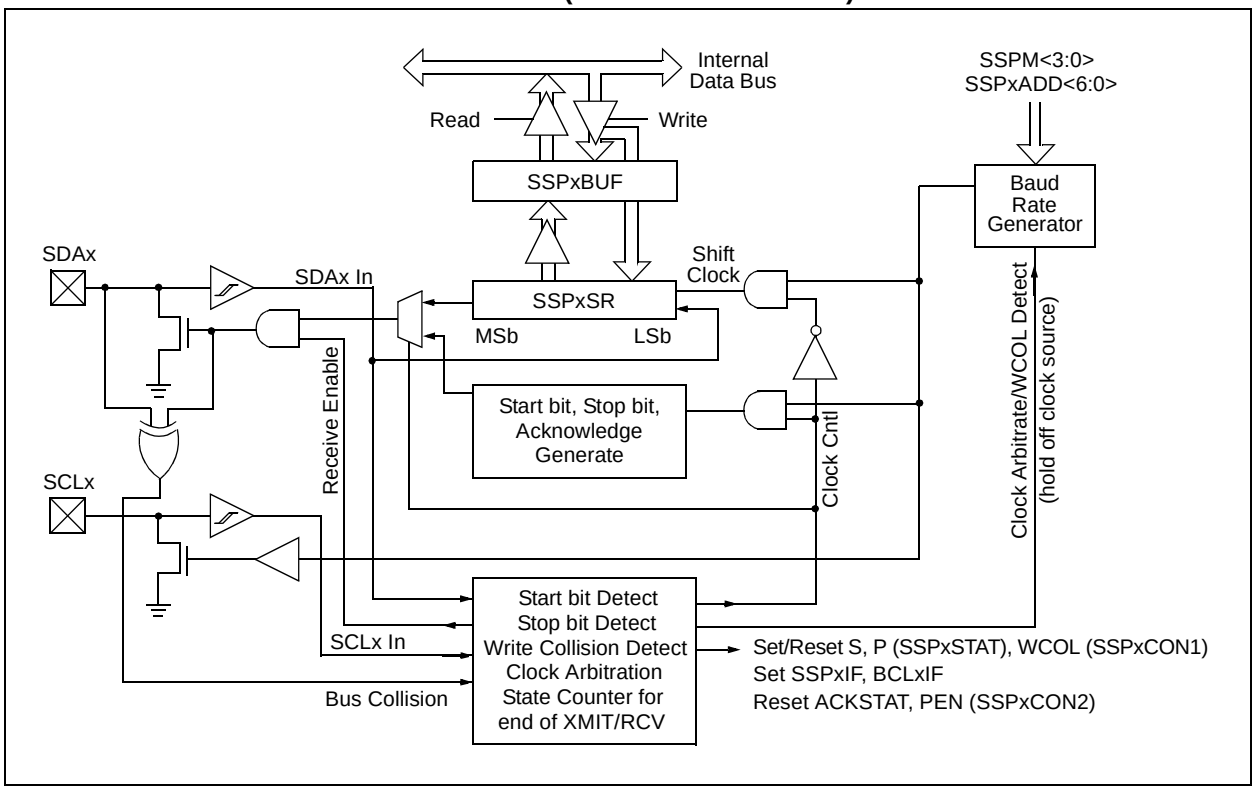

© 2008 Microchip Technology Inc.

19.4.6.1 I^{2}C Master Mode Operation

The master device generates all of the serial clock pulses and the Start and Stop conditions. A transfer is ended with a Stop condition or with a Repeated Start condition. Since the Repeated Start condition is also the beginning of the next serial transfer, the I^{2}C bus will not be released.

In Master Transmitter mode, serial data is output through SDAx, while SCLx outputs the serial clock. The first byte transmitted contains the slave address of the receiving device (7 bits) and the Read/Write (R/$\overline{W}$) bit. In this case, the R/$\overline{W}$ bit will be logic '0'. Serial data is transmitted 8 bits at a time. After each byte is transmitted, an Acknowledge bit is received. Start and Stop conditions are output to indicate the beginning and the end of a serial transfer.

In Master Receive mode, the first byte transmitted contains the slave address of the transmitting device (7 bits) and the R/$\overline{W}$ bit. In this case, the R/$\overline{W}$ bit will be logic '1'. Thus, the first byte transmitted is a 7-bit slave address, followed by a '1' to indicate the receive bit. Serial data is received via SDAx, while SCLx outputs the serial clock. Serial data is received 8 bits at a time. After each byte is received, an Acknowledge bit is transmitted. Start and Stop conditions indicate the beginning and end of transmission.

The Baud Rate Generator used for the SPI mode operation is used to set the SCLx clock frequency for either 100 kHz, 400 kHz or 1 MHz I^{2}C operation. See **Section 19.4.7 "Baud Rate"** for more detail.

A typical transmit sequence would go as follows:

1. The user generates a Start condition by setting the Start Enable bit, SEN (SSPxCON2<0>).
2. SSPxIF is set. The MSSP module will wait the required start time before any other operation takes place.
3. The user loads the SSPxBUF with the slave address to transmit.
4. Address is shifted out the SDAx pin until all 8 bits are transmitted.
5. The MSSP module shifts in the ACK bit from the slave device and writes its value into the SSPxCON2 register (SSPxCON2<6>).
6. The MSSP module generates an interrupt at the end of the ninth clock cycle by setting the SSPxIF bit.
7. The user loads the SSPxBUF with eight bits of data.
8. Data is shifted out the SDAx pin until all 8 bits are transmitted.
9. The MSSP module shifts in the ACK bit from the slave device and writes its value into the SSPxCON2 register (SSPxCON2<6>).
10. The MSSP module generates an interrupt at the end of the ninth clock cycle by setting the SSPxIF bit.
11. The user generates a Stop condition by setting the Stop Enable bit, PEN (SSPxCON2<2>).
12. Interrupt is generated once the Stop condition is complete.

19.4.7 BAUD RATE

In I^{2}C Master mode, the Baud Rate Generator (BRG) reload value is placed in the lower 7 bits of the SSPxADD register (Figure 19-17). When a write occurs to SSPxBUF, the Baud Rate Generator will automatically begin counting. The BRG counts down to ‘0’ and stops until another reload has taken place. The BRG count is decremented twice per instruction cycle (TCY) on the Q2 and Q4 clocks. In I^{2}C Master mode, the BRG is reloaded automatically.

Once the given operation is complete (i.e., transmission of the last data bit is followed by $\overline{\text{ACK}}$), the internal clock will automatically stop counting and the SCLx pin will remain in its last state.

Table 19-3 demonstrates clock rates based on instruction cycles and the BRG value loaded into SSPxADD.

19.4.7.1 Baud Rate and Module Interdependence

Because MSSP1 and MSSP2 are independent, they can operate simultaneously in I^{2}C Master mode at different baud rates. This is done by using different BRG reload values for each module.

Because this mode derives its basic clock source from the system clock, any changes to the clock will affect both modules in the same proportion. It may be possible to change one or both baud rates back to a previous value by changing the BRG reload value.

FIGURE 19-17: BAUD RATE GENERATOR BLOCK DIAGRAM

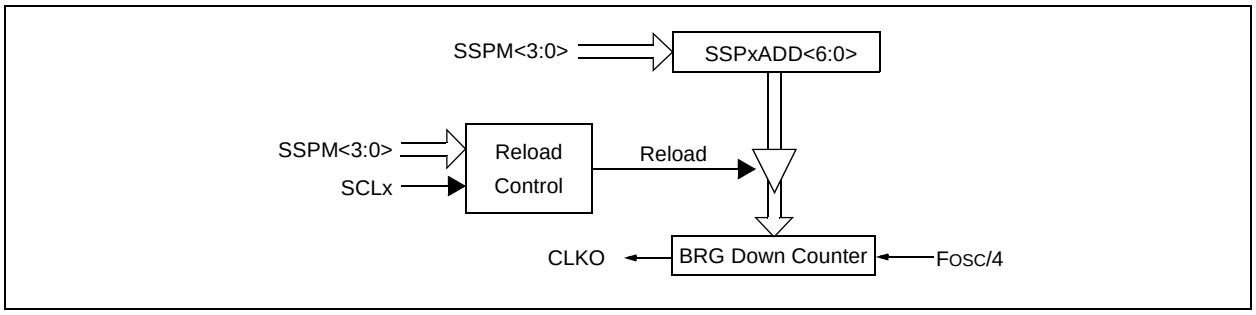

TABLE 19-3: I^{2}C™ CLOCK RATE w/BRG

FOSC	FCY	FCY*2	BRG Value	FSCL (2 Rollovers of BRG)
40 MHz	10 MHz	20 MHz	18h	400 kHz(1)
40 MHz	10 MHz	20 MHz	1Fh	312.5 kHz
40 MHz	10 MHz	20 MHz	63h	100 kHz
16 MHz	4 MHz	8 MHz	09h	400 kHz(1)
16 MHz	4 MHz	8 MHz	0Ch	308 kHz
16 MHz	4 MHz	8 MHz	27h	100 kHz
4 MHz	1 MHz	2 MHz	02h	333 kHz(1)
4 MHz	1 MHz	2 MHz	09h	100 kHz
4 MHz	1 MHz	2 MHz	00h	1 MHz(1)

Note 1: The I^{2}C interface does not conform to the 400 kHz I^{2}C specification (which applies to rates greater than 100 kHz) in all details, but may be used with care where higher rates are required by the application.

© 2008 Microchip Technology Inc.

19.4.7.2 Clock Arbitration

Clock arbitration occurs when the master, during any receive, transmit or Repeated Start/Stop condition, deasserts the SCLx pin (SCLx allowed to float high). When the SCLx pin is allowed to float high, the Baud Rate Generator (BRG) is suspended from counting until the SCLx pin is actually sampled high. When the SCLx pin is sampled high, the Baud Rate Generator is reloaded with the contents of SSPxADD<6:0> and begins counting. This ensures that the SCLx high time will always be at least one BRG rollover count in the event that the clock is held low by an external device (Figure 19-18).

FIGURE 19-18: BAUD RATE GENERATOR TIMING WITH CLOCK ARBITRATION

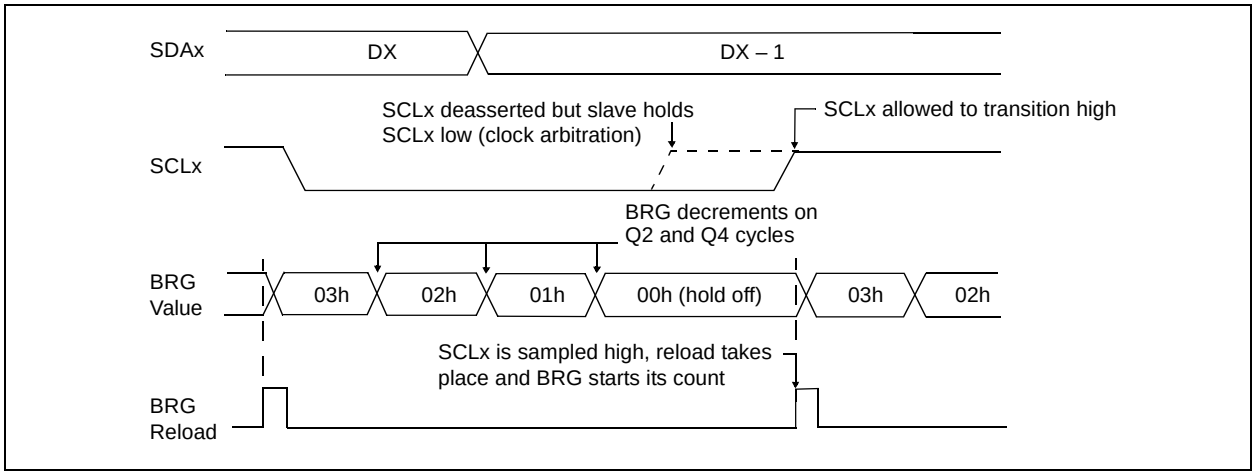

19.4.8 I²C MASTER MODE START CONDITION TIMING

To initiate a Start condition, the user sets the Start Enable bit, SEN (SSPxCON2<0>). If the SDAx and SCLx pins are sampled high, the Baud Rate Generator is reloaded with the contents of SSPxADD<6:0> and starts its count. If SCLx and SDAx are both sampled high when the Baud Rate Generator times out (TBRG), the SDAx pin is driven low. The action of the SDAx being driven low while SCLx is high is the Start condition and causes the S bit (SSPxSTAT<3>) to be set. Following this, the Baud Rate Generator is reloaded with the contents of SSPxADD<6:0> and resumes its count. When the Baud Rate Generator times out (TBRG), the SEN bit (SSPxCON2<0>) will be automatically cleared by hardware; the Baud Rate Generator is suspended, leaving the SDAx line held low and the Start condition is complete.

> **Note:** If at the beginning of the Start condition, the SDAx and SCLx pins are already sampled low, or if during the Start condition, the SCLx line is sampled low before the SDAx line is driven low, a bus collision occurs, the Bus Collision Interrupt Flag, BCLxIF, is set, the Start condition is aborted and the I²C module is reset into its Idle state.

19.4.8.1 WCOL Status Flag

If the user writes the SSPxBUF when a Start sequence is in progress, the WCOL bit is set and the contents of the buffer are unchanged (the write doesn't occur).

> **Note:** Because queueing of events is not allowed, writing to the lower 5 bits of SSPxCON2 is disabled until the Start condition is complete.

FIGURE 19-19: FIRST START BIT TIMING

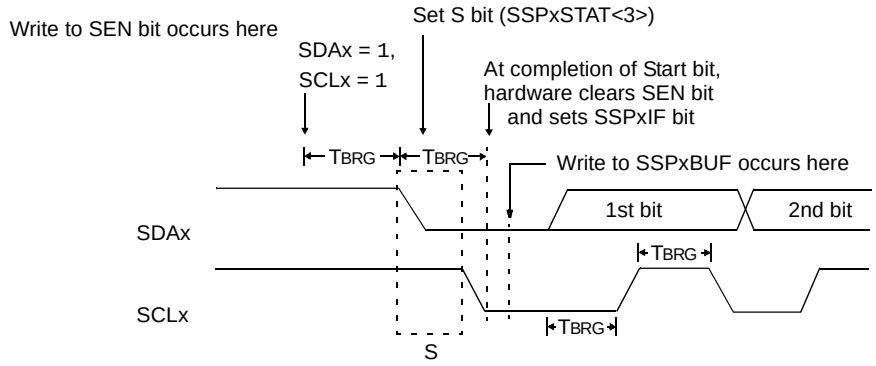

© 2008 Microchip Technology Inc.

19.4.9 I²C MASTER MODE REPEATED START CONDITION TIMING

A Repeated Start condition occurs when the RSEN bit (SSPxCON2<1>) is programmed high and the I²C logic module is in the Idle state. When the RSEN bit is set, the SCLx pin is asserted low. When the SCLx pin is sampled low, the Baud Rate Generator is loaded with the contents of SSPxADD<5:0> and begins counting. The SDAx pin is released (brought high) for one Baud Rate Generator count (TBRG). When the Baud Rate Generator times out, if SDAx is sampled high, the SCLx pin will be deasserted (brought high). When SCLx is sampled high, the Baud Rate Generator is reloaded with the contents of SSPxADD<6:0> and begins counting. SDAx and SCLx must be sampled high for one TBRG. This action is then followed by assertion of the SDAx pin (SDAx = 0) for one TBRG while SCLx is high. Following this, the RSEN bit (SSPxCON2<1>) will be automatically cleared and the Baud Rate Generator will not be reloaded, leaving the SDAx pin held low. As soon as a Start condition is detected on the SDAx and SCLx pins, the S bit (SSPxSTAT<3>) will be set. The SSPxIF bit will not be set until the Baud Rate Generator has timed out.

> **Note 1:** If RSEN is programmed while any other event is in progress, it will not take effect.
>
> **2:** A bus collision during the Repeated Start condition occurs if:
>
> - SDAx is sampled low when SCLx goes from low-to-high.
> - SCLx goes low before SDAx is asserted low. This may indicate that another master is attempting to transmit a data ‘1’.

Immediately following the SSPxIF bit getting set, the user may write the SSPxBUF with the 7-bit address in 7-bit mode or the default first address in 10-bit mode. After the first eight bits are transmitted and an ACK is received, the user may then transmit an additional eight bits of address (10-bit mode) or eight bits of data (7-bit mode).

19.4.9.1 WCOL Status Flag

If the user writes the SSPxBUF when a Repeated Start sequence is in progress, the WCOL is set and the contents of the buffer are unchanged (the write doesn’t occur).

> **Note:** Because queueing of events is not allowed, writing of the lower 5 bits of SSPxCON2 is disabled until the Repeated Start condition is complete.

FIGURE 19-20: REPEATED START CONDITION WAVEFORM

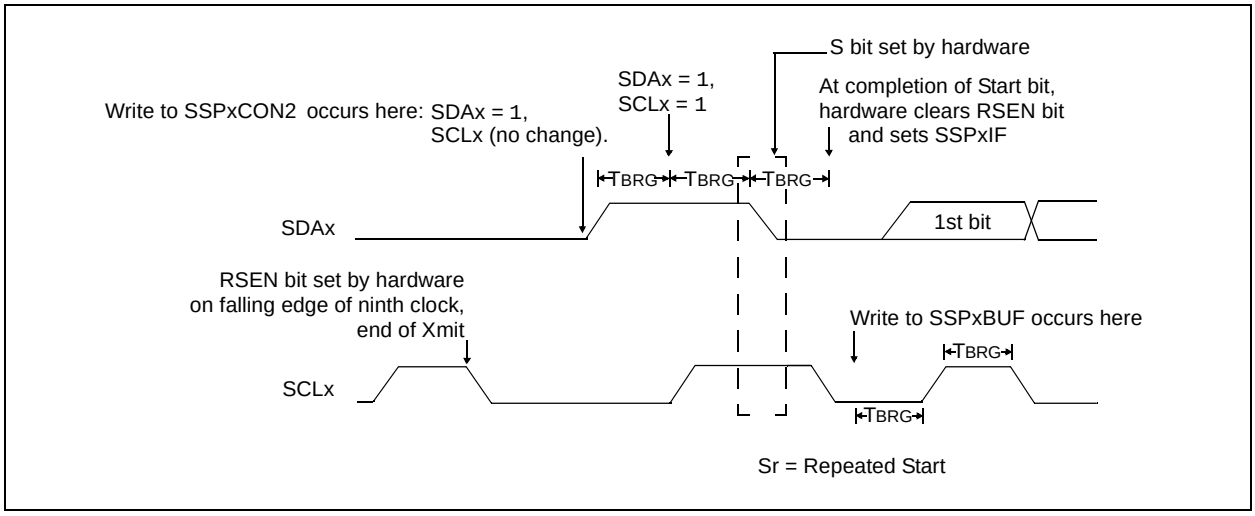

19.4.10 I²C MASTER MODE TRANSMISSION

Transmission of a data byte, a 7-bit address, or the other half of a 10-bit address, is accomplished by simply writing a value to the SSPxBUF register. This action will set the Buffer Full flag bit, BF and allow the Baud Rate Generator to begin counting and start the next transmission. Each bit of address/data will be shifted out onto the SDAx pin after the falling edge of SCLx is asserted (see data hold time specification parameter 106). SCLx is held low for one Baud Rate Generator rollover count (TBRG). Data should be valid before SCLx is released high (see data setup time specification parameter 107). When the SCLx pin is released high, it is held that way for TBRG. The data on the SDAx pin must remain stable for that duration and some hold time after the next falling edge of SCLx. After the eighth bit is shifted out (the falling edge of the eighth clock), the BF flag is cleared and the master releases SDAx. This allows the slave device being addressed to respond with an $\overline{\text{ACK}}$ bit during the ninth bit time if an address match occurred, or if data was received properly. The status of $\overline{\text{ACK}}$ is written into the ACKDT bit on the falling edge of the ninth clock. If the master receives an Acknowledge, the Acknowledge Status bit, ACKSTAT, is cleared. If not, the bit is set. After the ninth clock, the SSPxIF bit is set and the master clock (Baud Rate Generator) is suspended until the next data byte is loaded into the SSPxBUF, leaving SCLx low and SDAx unchanged (Figure 19-21).

After the write to the SSPxBUF, each bit of the address will be shifted out on the falling edge of SCLx until all seven address bits and the R/$\overline{\text{W}}$ bit are completed. On the falling edge of the eighth clock, the master will deassert the SDAx pin, allowing the slave to respond with an Acknowledge. On the falling edge of the ninth clock, the master will sample the SDAx pin to see if the address was recognized by a slave. The status of the $\overline{\text{ACK}}$ bit is loaded into the ACKSTAT status bit (SSPxCON2<6>). Following the falling edge of the ninth clock transmission of the address, the SSPxIF is set, the BF flag is cleared and the Baud Rate Generator is turned off until another write to the SSPxBUF takes place, holding SCLx low and allowing SDAx to float.

19.4.10.1 BF Status Flag

In Transmit mode, the BF bit (SSPxSTAT<0>) is set when the CPU writes to SSPxBUF and is cleared when all 8 bits are shifted out.

19.4.10.2 WCOL Status Flag

If the user writes the SSPxBUF when a transmit is already in progress (i.e., SSPxSR is still shifting out a data byte), the WCOL bit is set and the contents of the buffer are unchanged (the write doesn't occur) after 2 TCY after the SSPxBUF write. If SSPxBUF is rewritten within 2 TCY, the WCOL bit is set and SSPxBUF is updated. This may result in a corrupted transfer.

The user should verify that the WCOL bit is clear after each write to SSPxBUF to ensure the transfer is correct. In all cases, WCOL must be cleared in software.

19.4.10.3 ACKSTAT Status Flag

In Transmit mode, the ACKSTAT bit (SSPxCON2<6>) is cleared when the slave has sent an Acknowledge ($\overline{\text{ACK}}$ = 0) and is set when the slave does not Acknowledge ($\overline{\text{ACK}}$ = 1). A slave sends an Acknowledge when it has recognized its address (including a general call), or when the slave has properly received its data.

19.4.11 I²C MASTER MODE RECEPTION

Master mode reception is enabled by programming the Receive Enable bit, RCEN (SSPxCON2<3>).

> **Note:** The MSSP module must be in an inactive state before the RCEN bit is set or the RCEN bit will be disregarded.

The Baud Rate Generator begins counting and on each rollover, the state of the SCLx pin changes (high-to-low/low-to-high) and data is shifted into the SSPxSR. After the falling edge of the eighth clock, the receive enable flag is automatically cleared, the contents of the SSPxSR are loaded into the SSPxBUF, the BF flag bit is set, the SSPxIF flag bit is set and the Baud Rate Generator is suspended from counting, holding SCLx low. The MSSP is now in Idle state awaiting the next command. When the buffer is read by the CPU, the BF flag bit is automatically cleared. The user can then send an Acknowledge bit at the end of reception by setting the Acknowledge Sequence Enable bit, ACKEN (SSPxCON2<4>).

19.4.11.1 BF Status Flag

In receive operation, the BF bit is set when an address or data byte is loaded into SSPxBUF from SSPxSR. It is cleared when the SSPxBUF register is read.

19.4.11.2 SSPOV Status Flag

In receive operation, the SSPOV bit is set when 8 bits are received into the SSPxSR and the BF flag bit is already set from a previous reception.

19.4.11.3 WCOL Status Flag

If the user writes the SSPxBUF when a receive is already in progress (i.e., SSPxSR is still shifting in a data byte), the WCOL bit is set and the contents of the buffer are unchanged (the write doesn't occur).

© 2008 Microchip Technology Inc.

FIGURE 19-21: I²C™ MASTER MODE WAVEFORM (TRANSMISSION, 7 OR 10-BIT ADDRESS)

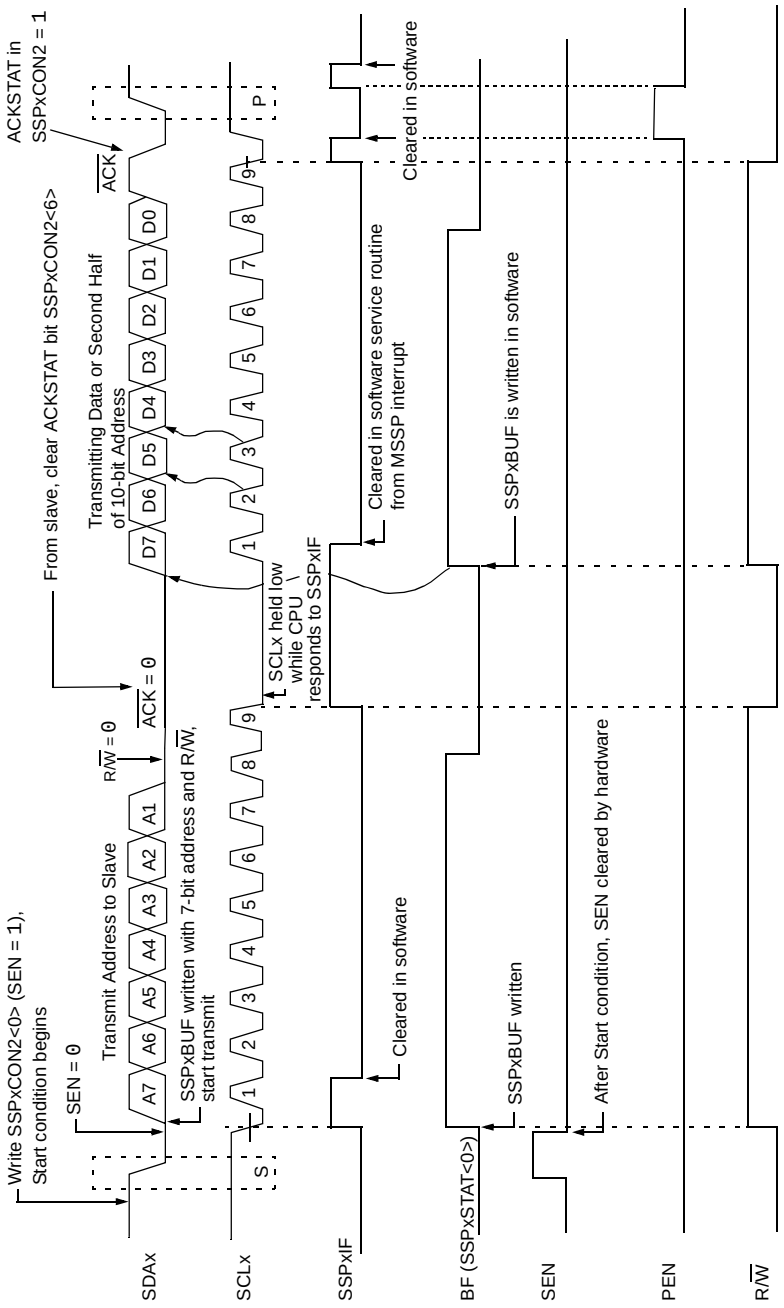

FIGURE 19-22: I²C™ MASTER MODE WAVEFORM (RECEPTION, 7-BIT ADDRESS)

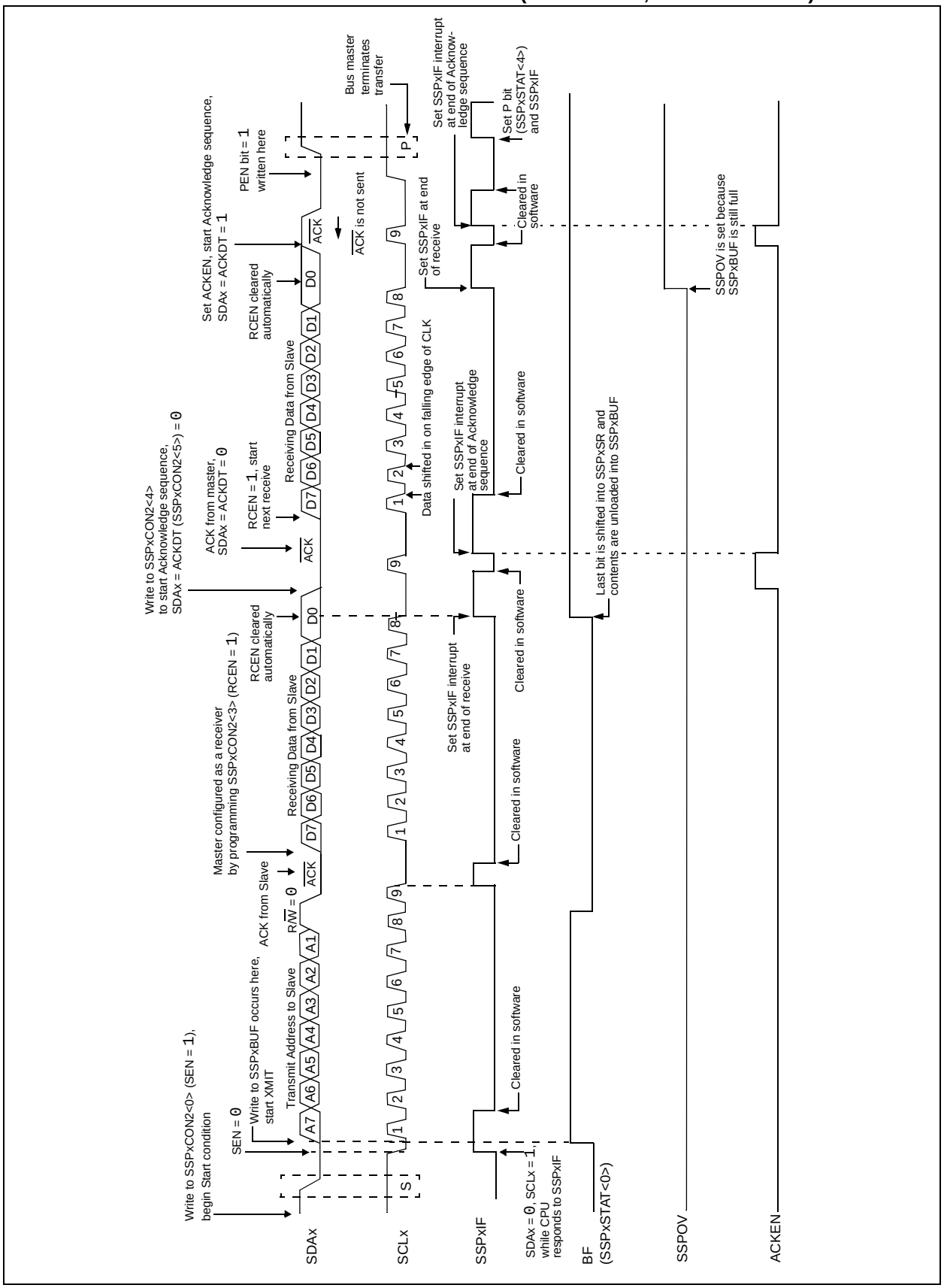

© 2008 Microchip Technology Inc.

19.4.12 ACKNOWLEDGE SEQUENCE TIMING

An Acknowledge sequence is enabled by setting the Acknowledge Sequence Enable bit, ACKEN (SSPxCON2<4>). When this bit is set, the SCLx pin is pulled low and the contents of the Acknowledge data bit are presented on the SDAx pin. If the user wishes to generate an Acknowledge, then the ACKDT bit should be cleared. If not, the user should set the ACKDT bit before starting an Acknowledge sequence. The Baud Rate Generator then counts for one rollover period (TBRG) and the SCLx pin is deasserted (pulled high). When the SCLx pin is sampled high (clock arbitration), the Baud Rate Generator counts for TBRG. The SCLx pin is then pulled low. Following this, the ACKEN bit is automatically cleared, the Baud Rate Generator is turned off and the MSSP module then goes into an inactive state (Figure 19-23).

19.4.12.1 WCOL Status Flag

If the user writes the SSPxBUF when an Acknowledge sequence is in progress, then WCOL is set and the contents of the buffer are unchanged (the write doesn't occur).

19.4.13 STOP CONDITION TIMING

A Stop bit is asserted on the SDAx pin at the end of a receive/transmit by setting the Stop Sequence Enable bit, PEN (SSPxCON2<2>). At the end of a receive/transmit, the SCLx line is held low after the falling edge of the ninth clock. When the PEN bit is set, the master will assert the SDAx line low. When the SDAx line is sampled low, the Baud Rate Generator is reloaded and counts down to '0'. When the Baud Rate Generator times out, the SCLx pin will be brought high and one TBRG (Baud Rate Generator rollover count) later, the SDAx pin will be deasserted. When the SDAx pin is sampled high while SCLx is high, the P bit (SSPxSTAT<4>) is set. A TBRG later, the PEN bit is cleared and the SSPxIF bit is set (Figure 19-24).

19.4.13.1 WCOL Status Flag

If the user writes the SSPxBUF when a Stop sequence is in progress, then the WCOL bit is set and the contents of the buffer are unchanged (the write doesn't occur).

FIGURE 19-23: ACKNOWLEDGE SEQUENCE WAVEFORM

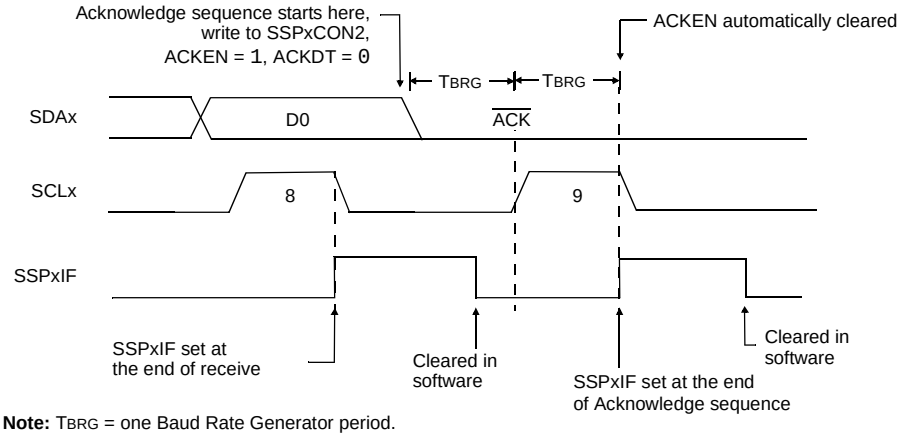

Note: TBRG = one Baud Rate Generator period.

FIGURE 19-24: STOP CONDITION RECEIVE OR TRANSMIT MODE

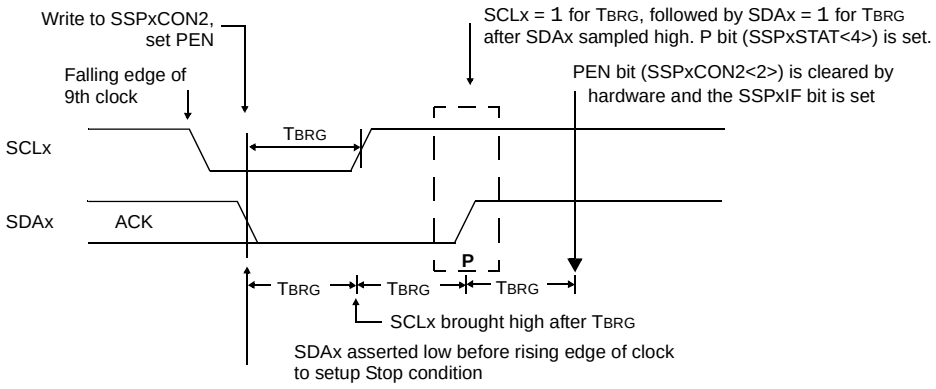

Note: TBRG = one Baud Rate Generator period.

19.4.14 SLEEP OPERATION

While in Sleep mode, the I^{2}C module can receive addresses or data and when an address match or complete byte transfer occurs, wake the processor from Sleep (if the MSSP interrupt is enabled).

19.4.15 EFFECTS OF A RESET

A Reset disables the MSSP module and terminates the current transfer.

19.4.16 MULTI-MASTER MODE

In Multi-Master mode, the interrupt generation on the detection of the Start and Stop conditions allows the determination of when the bus is free. The Stop (P) and Start (S) bits are cleared from a Reset or when the MSSP module is disabled. Control of the I^{2}C bus may be taken when the P bit (SSPxSTAT<4>) is set, or the bus is Idle, with both the S and P bits clear. When the bus is busy, enabling the MSSP interrupt will generate the interrupt when the Stop condition occurs.

In multi-master operation, the SDAx line must be monitored for arbitration to see if the signal level is the expected output level. This check is performed in hardware with the result placed in the BCLxIF bit.

The states where arbitration can be lost are:

- Address Transfer
- Data Transfer
- A Start Condition
- A Repeated Start Condition
- An Acknowledge Condition

19.4.17 MULTI -MASTER COMMUNICATION, BUS COLLISION AND BUS ARBITRATION

Multi-Master mode support is achieved by bus arbitration. When the master outputs address/data bits onto the SDAx pin, arbitration takes place when the master outputs a ‘1’ on SDAx, by letting SDAx float high and another master asserts a ‘0’. When the SCLx pin floats high, data should be stable. If the expected data on SDAx is a ‘1’ and the data sampled on the SDAx pin = 0, then a bus collision has taken place. The master will set the Bus Collision Interrupt Flag, BCLxIF and reset the I^{2}C port to its Idle state (Figure 19-25).

If a transmit was in progress when the bus collision occurred, the transmission is halted, the BF flag is cleared, the SDAx and SCLx lines are deasserted and the SSPxBUF can be written to. When the user services the bus collision Interrupt Service Routine and if the I^{2}C bus is free, the user can resume communication by asserting a Start condition.

If a Start, Repeated Start, Stop or Acknowledge condition was in progress when the bus collision occurred, the condition is aborted, the SDAx and SCLx lines are deasserted and the respective control bits in the SSPxCON2 register are cleared. When the user services the bus collision Interrupt Service Routine and if the I^{2}C bus is free, the user can resume communication by asserting a Start condition.

The master will continue to monitor the SDAx and SCLx pins. If a Stop condition occurs, the SSPxIF bit will be set.

A write to the SSPxBUF will start the transmission of data at the first data bit regardless of where the transmitter left off when the bus collision occurred.

In Multi-Master mode, the interrupt generation on the detection of Start and Stop conditions allows the determination of when the bus is free. Control of the I^{2}C bus can be taken when the P bit is set in the SSPxSTAT register, or the bus is Idle and the S and P bits are cleared.

FIGURE 19-25: BUS COLLISION TIMING FOR TRANSMIT AND ACKNOWLEDGE

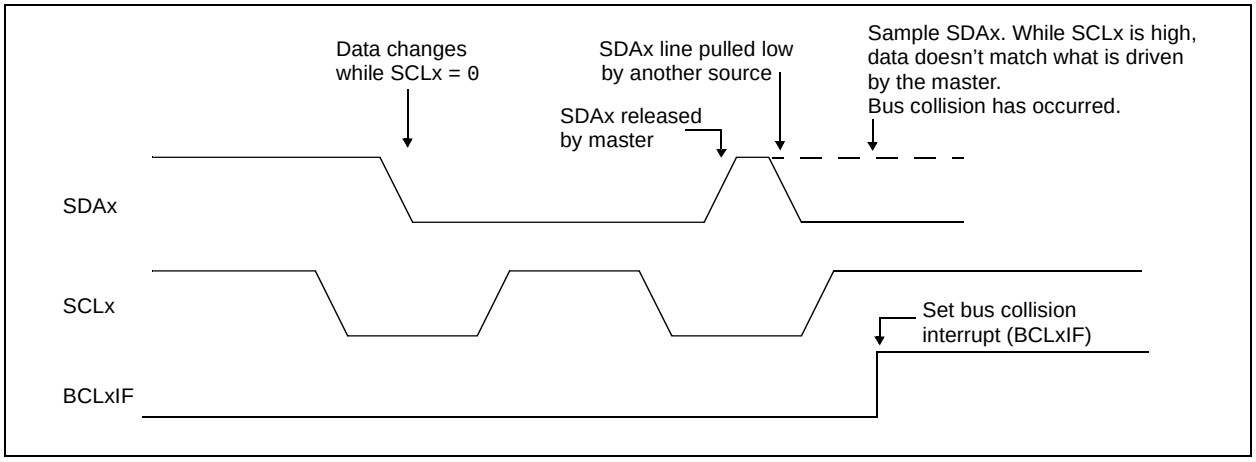

© 2008 Microchip Technology Inc.

19.4.17.1 Bus Collision During a Start Condition

During a Start condition, a bus collision occurs if:

a) SDAx or SCLx are sampled low at the beginning of the Start condition (Figure 19-26).

b) SCLx is sampled low before SDAx is asserted low (Figure 19-27).

During a Start condition, both the SDAx and the SCLx pins are monitored.

If the SDAx pin is already low, or the SCLx pin is already low, then all of the following occur:

- the Start condition is aborted,
- the BCLxIF flag is set and
- the MSSP module is reset to its inactive state (Figure 19-26).

The Start condition begins with the SDAx and SCLx pins deasserted. When the SDAx pin is sampled high, the Baud Rate Generator is loaded from SSPxADD<6:0> and counts down to '0'. If the SCLx pin is sampled low while SDAx is high, a bus collision occurs because it is assumed that another master is attempting to drive a data '1' during the Start condition.

If the SDAx pin is sampled low during this count, the BRG is reset and the SDAx line is asserted early (Figure 19-28). If, however, a '1' is sampled on the SDAx pin, the SDAx pin is asserted low at the end of the BRG count. The Baud Rate Generator is then reloaded and counts down to '0'. If the SCLx pin is sampled as '0' during this time, a bus collision does not occur. At the end of the BRG count, the SCLx pin is asserted low.

> **Note:** The reason that bus collision is not a factor during a Start condition is that no two bus masters can assert a Start condition at the exact same time. Therefore, one master will always assert SDAx before the other. This condition does not cause a bus collision because the two masters must be allowed to arbitrate the first address following the Start condition. If the address is the same, arbitration must be allowed to continue into the data portion, Repeated Start or Stop conditions.

FIGURE 19-26: BUS COLLISION DURING START CONDITION (SDAx ONLY)

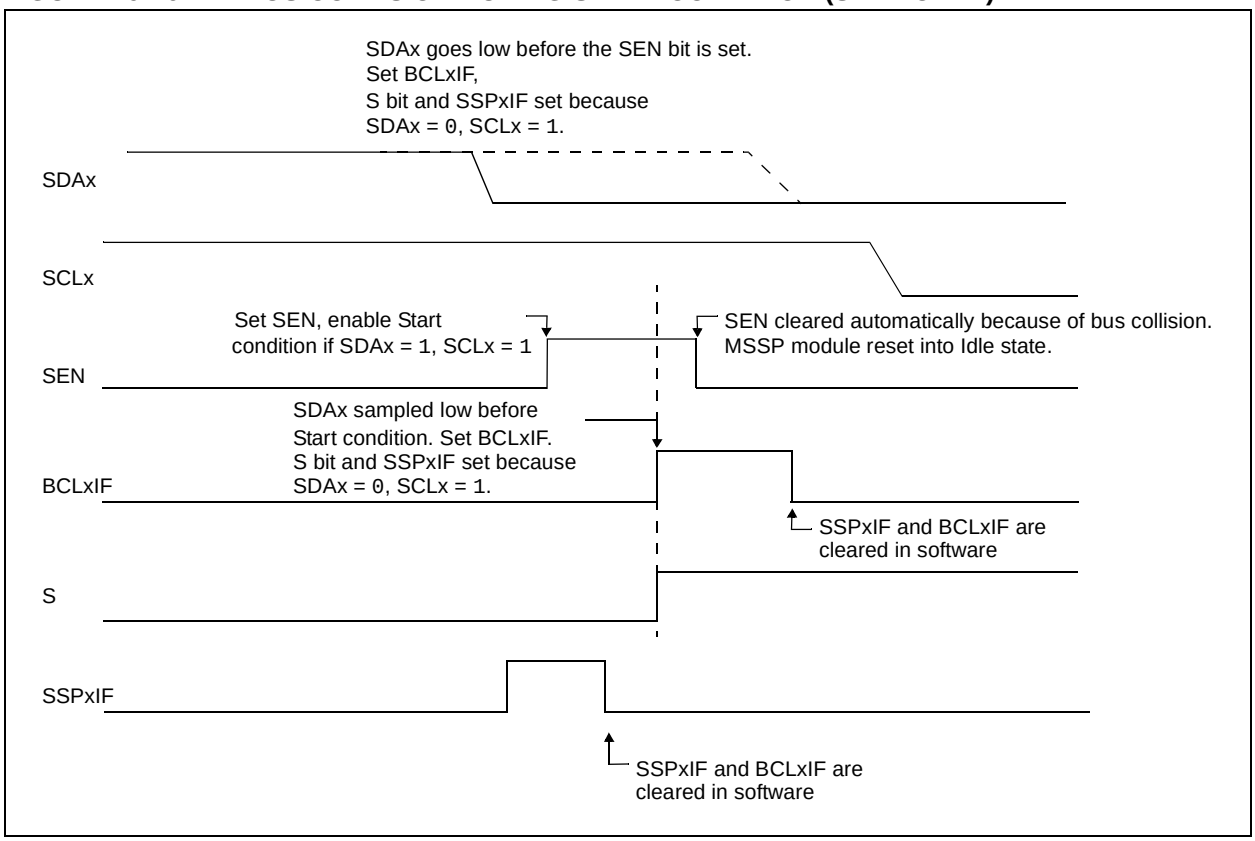

FIGURE 19-27: BUS COLLISION DURING START CONDITION (SCLx = 0)

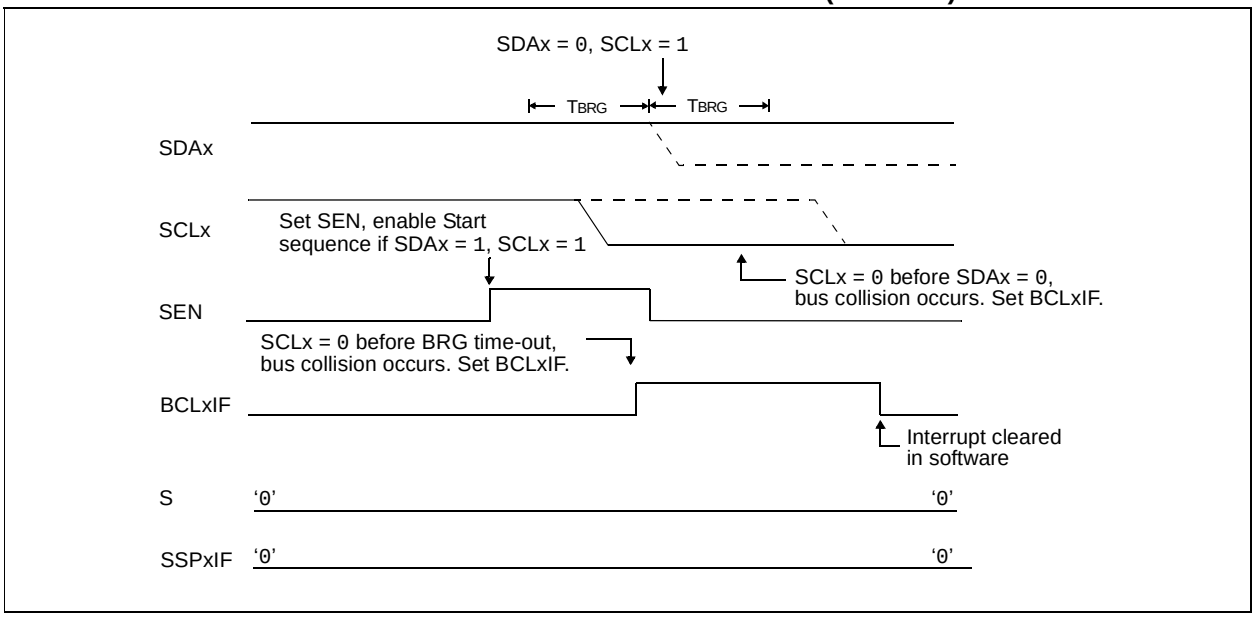

FIGURE 19-28: BRG RESET DUE TO SDAx ARBITRATION DURING START CONDITION

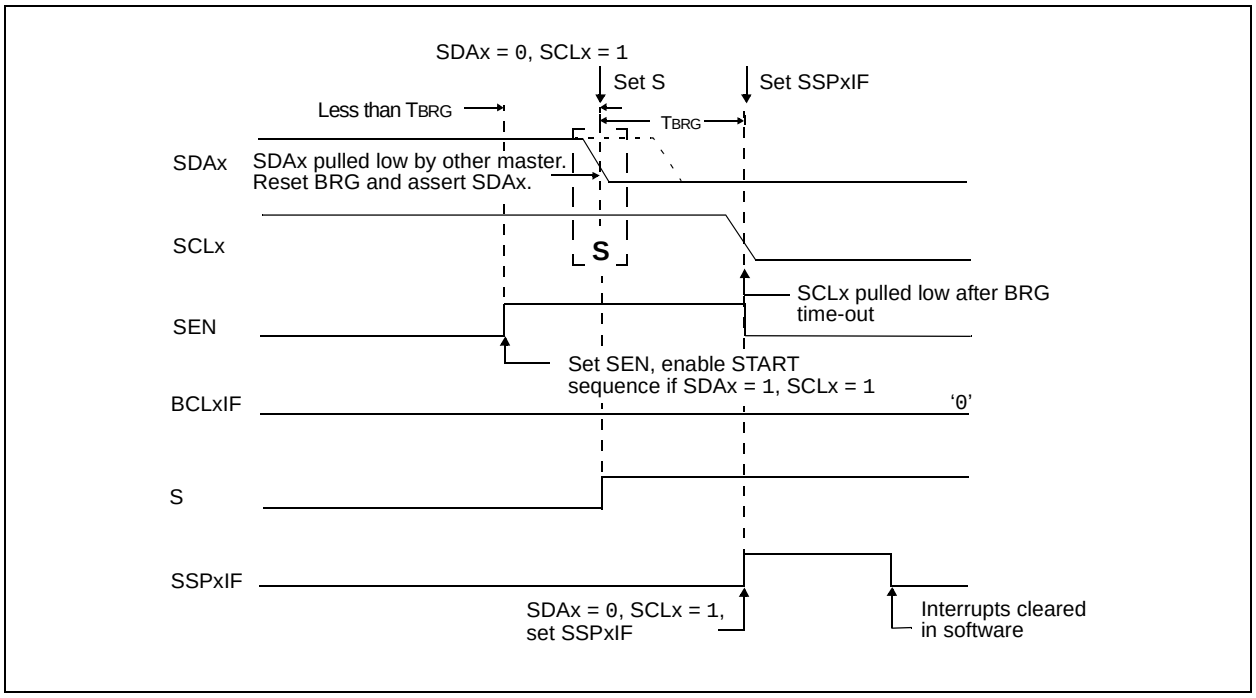

© 2008 Microchip Technology Inc.

19.4.17.2 Bus Collision During a Repeated Start Condition

During a Repeated Start condition, a bus collision occurs if:

a) A low level is sampled on SDAx when SCLx goes from low level to high level.

b) SCLx goes low before SDAx is asserted low, indicating that another master is attempting to transmit a data '1'.

When the user deasserts SDAx and the pin is allowed to float high, the BRG is loaded with SSPxADD<6:0> and counts down to '0'. The SCLx pin is then deasserted and when sampled high, the SDAx pin is sampled.

If SDAx is low, a bus collision has occurred (i.e., another master is attempting to transmit a data '0', Figure 19-29). If SDAx is sampled high, the BRG is reloaded and begins counting. If SDAx goes from high-to-low before the BRG times out, no bus collision occurs because no two masters can assert SDAx at exactly the same time.

If SCLx goes from high-to-low before the BRG times out and SDAx has not already been asserted, a bus collision occurs. In this case, another master is attempting to transmit a data '1' during the Repeated Start condition (see Figure 19-30).

If, at the end of the BRG time-out, both SCLx and SDAx are still high, the SDAx pin is driven low and the BRG is reloaded and begins counting. At the end of the count, regardless of the status of the SCLx pin, the SCLx pin is driven low and the Repeated Start condition is complete.

FIGURE 19-29: BUS COLLISION DURING A REPEATED START CONDITION (CASE 1)

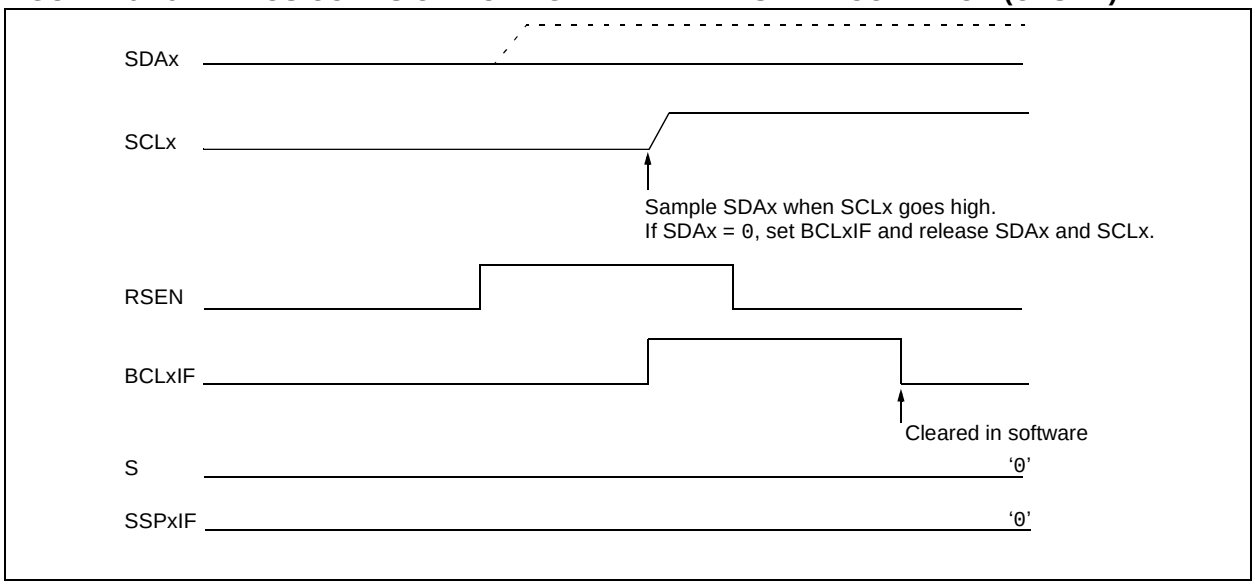

FIGURE 19-30: BUS COLLISION DURING REPEATED START CONDITION (CASE 2)

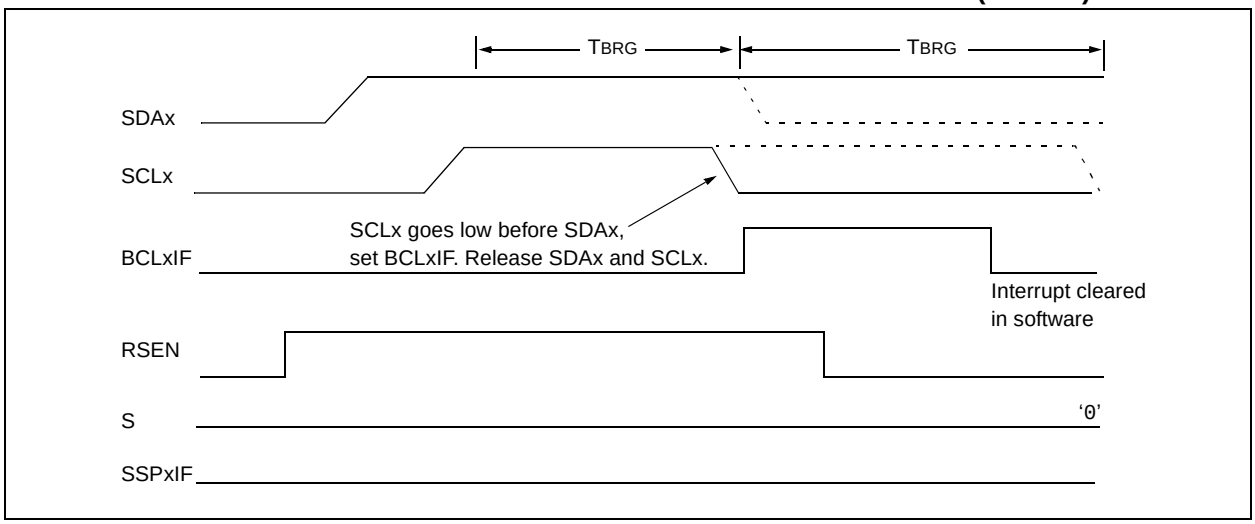

19.4.17.3 Bus Collision During a Stop Condition

Bus collision occurs during a Stop condition if:

a) After the SDAx pin has been deasserted and allowed to float high, SDAx is sampled low after the BRG has timed out.

b) After the SCLx pin is deasserted, SCLx is sampled low before SDAx goes high.

The Stop condition begins with SDAx asserted low. When SDAx is sampled low, the SCLx pin is allowed to float. When the pin is sampled high (clock arbitration), the Baud Rate Generator is loaded with SSPxADD<6:0> and counts down to '0'. After the BRG times out, SDAx is sampled. If SDAx is sampled low, a bus collision has occurred. This is due to another master attempting to drive a data '0' (Figure 19-31). If the SCLx pin is sampled low before SDAx is allowed to float high, a bus collision occurs. This is another case of another master attempting to drive a data '0' (Figure 19-32).

FIGURE 19-31: BUS COLLISION DURING A STOP CONDITION (CASE 1)

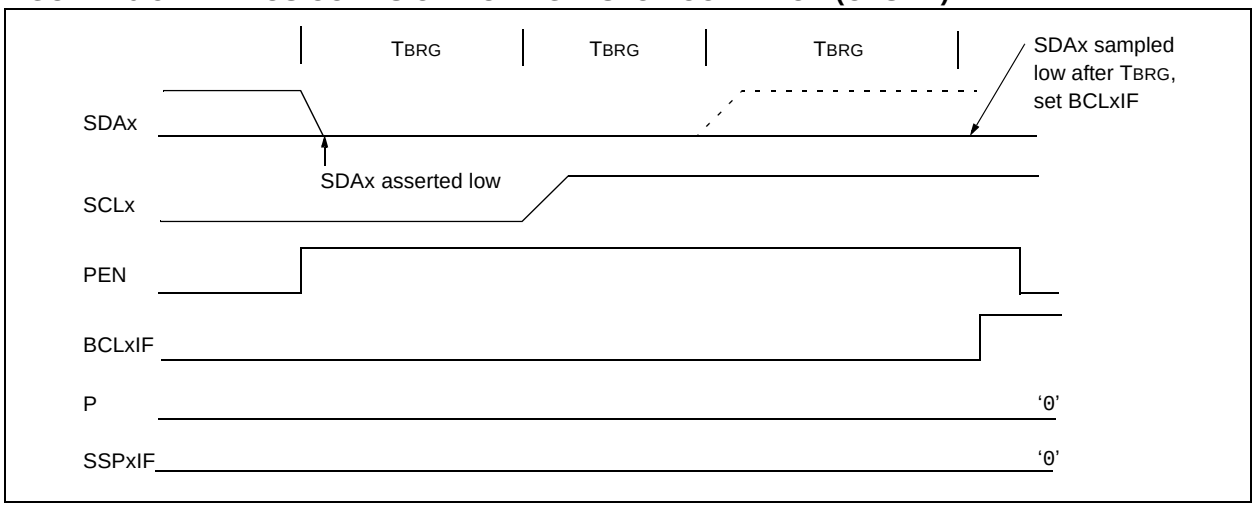

FIGURE 19-32: BUS COLLISION DURING A STOP CONDITION (CASE 2)

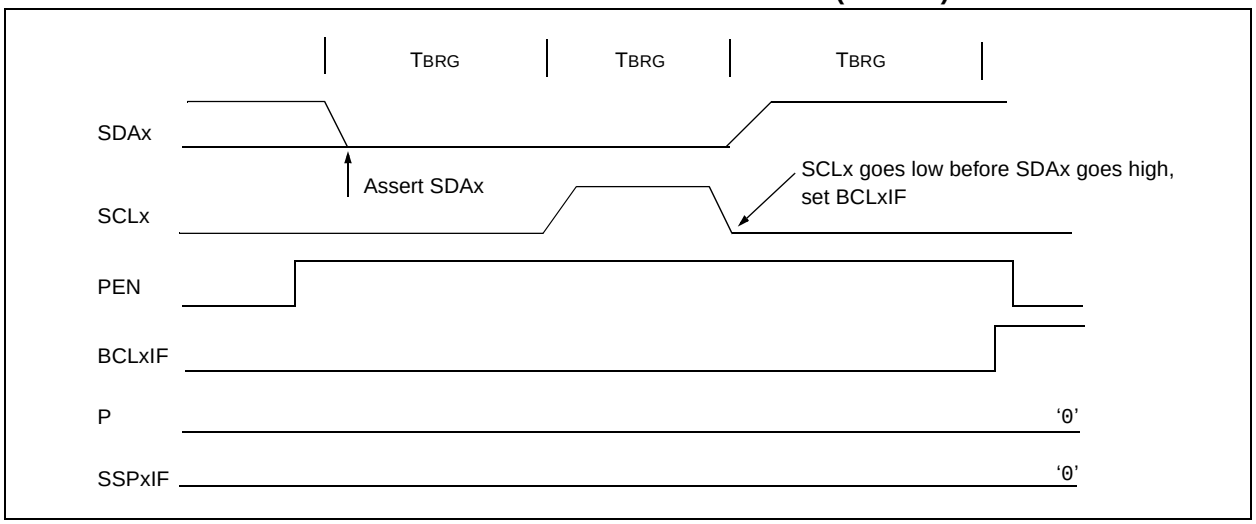

© 2008 Microchip Technology Inc.

TABLE 19-4: REGISTERS ASSOCIATED WITH I²C™ OPERATION

Name	Bit 7	Bit 6	Bit 5	Bit 4	Bit 3	Bit 2	Bit 1	Bit 0	Reset Values on page
INTCON	GIE/GIEH	PEIE/GIEL	TMR0IE	INT0IE	RBIE	TMR0IF	INT0IF	RBIF	57
PIR1	PSPIF	ADIF	RC1IF	TX1IF	SSP1IF	CCP1IF	TMR2IF	TMR1IF	60
PIE1	PSPIE	ADIE	RC1IE	TX1IE	SSP1IE	CCP1IE	TMR2IE	TMR1IE	60
IPR1	PSPIP	ADIP	RC1IP	TX1IP	SSP1IP	CCP1IP	TMR2IP	TMR1IP	60
PIR2	OSCFIF	CMIF	—	EEIF	BCL1IF	HLVDIF	TMR3IF	CCP2IF	60
PIE2	OSCFIE	CMIE	—	EEIE	BCL1IE	HLVDIE	TMR3IE	CCP2IE	60
IPR2	OSCFIP	CMIP	—	EEIP	BCL1IP	HLVDIP	TMR3IP	CCP2IP	60
PIR3	SSP2IF	BCL2IF	RC2IF	TX2IF	TMR4IF	CCP5IF	CCP4IF	CCP3IF	60
PIE3	SSP2IE	BCL2IE	RC2IE	TX2IE	TMR4IE	CCP5IE	CCP4IE	CCP3IE	60
IPR3	SSP2IP	BCL2IP	RC2IP	TX2IP	TMR4IP	CCP5IP	CCP4IP	CCP3IP	60
TRISC	TRISC7	TRISC6	TRISC5	TRISC4	TRISC3	TRISC2	TRISC1	TRISC0	60
TRISD	TRISD7	TRISD6	TRISD5	TRISD4	TRISD3	TRISD2	TRISD1	TRISD0	60
SSP1BUF	MSSP1 Receive Buffer/Transmit Register								58
SSP2BUF	MSSP2 Receive Buffer/Transmit Register								61
SSP1ADD	MSSP1 Address Register in I²C™ Slave mode. MSSP1 Baud Rate Reload Register in I²C Master mode.								58
SSP2ADD	MSSP2 Address Register in I²C Slave mode. MSSP2 Baud Rate Reload Register in I²C Master mode.								61
TMR2	Timer2 Register								58
PR2	Timer2 Period Register								58
SSP1CON1	WCOL	SSPOV	SSPEN	CKP	SSPM3	SSPM2	SSPM1	SSPM0	58
SSP1CON2	GCEN	ACKSTAT	ACKDT	ACKEN	RCEN	PEN	RSEN	SEN	58
SSP1STAT	SMP	CKE	D/$\overline{A}$	P	S	R/$\overline{W}$	UA	BF	58
SSP2CON1	WCOL	SSPOV	SSPEN	CKP	SSPM3	SSPM2	SSPM1	SSPM0	61
SSP2CON2	GCEN	ACKSTAT	ACKDT	ACKEN	RCEN	PEN	RSEN	SEN	61
SSP2STAT	SMP	CKE	D/$\overline{A}$	P	S	R/$\overline{W}$	UA	BF	61

Legend: — = unimplemented, read as '0'. Shaded cells are not used by the MSSP module in I²C mode.

NOTES:

© 2008 Microchip Technology Inc.

20.0 ENHANCED UNIVERSAL SYNCHRONOUS RECEIVER TRANSMITTER (EUSART)

The Enhanced Universal Synchronous Asynchronous Receiver Transmitter (EUSART) module is one of two serial I/O modules. (Generically, the USART is also known as a Serial Communications Interface or SCI.) The EUSART can be configured as a full-duplex asynchronous system that can communicate with peripheral devices, such as CRT terminals and personal computers. It can also be configured as a half-duplex synchronous system that can communicate with peripheral devices, such as A/D or D/A integrated circuits, serial EEPROMs, etc.

The Enhanced USART module implements additional features, including automatic baud rate detection and calibration, automatic wake-up on Sync Break reception and 12-bit Break Character transmit. These make it ideally suited for use in Local Interconnect Network bus (LIN bus) systems.

The EUSART can be configured in the following modes:

- Asynchronous (full duplex) with:
  - Auto-Wake-up on Character Reception
  - Auto-Baud Calibration
  - 12-bit Break Character Transmission
- Synchronous – Master (half duplex) with Selectable Clock Polarity
- Synchronous – Slave (half duplex) with Selectable Clock Polarity

The pins of EUSART1 and EUSART2 are multiplexed with the functions of PORTC (RC6/TX1/CK1 and RC7/RX1/DT1) and PORTG (RG1/TX2/CK2 and RG2/RX2/DT2), respectively. In order to configure these pins as an EUSART:

- For EUSART1:
  - bit SPEN (RCSTA1<7>) must be set (= 1)
  - bit TRISC<7> must be set (= 1)
  - bit TRISC<6> must be cleared (= 0) for Asynchronous and Synchronous Master modes
  - bit TRISC<6> must be set (= 1) for Synchronous Slave mode
- For EUSART2:
  - bit SPEN (RCSTA2<7>) must be set (= 1)
  - bit TRISG<2> must be set (= 1)
  - bit TRISG<1> must be cleared (= 0) for Asynchronous and Synchronous Master modes
  - bit TRISC<6> must be set (= 1) for Synchronous Slave mode

Note:	The EUSART control will automatically reconfigure the pin from input to output as needed.

The operation of each Enhanced USART module is controlled through three registers:

- Transmit Status and Control (TXSTAx)
- Receive Status and Control (RCSTAx)
- Baud Rate Control (BAUDCONx)

These are detailed on the following pages in Register 20-1, Register 20-2 and Register 20-3, respectively.

Note:	Throughout this section, references to register and bit names that may be associated with a specific EUSART module are referred to generically by the use of ‘x’ in place of the specific module number. Thus, “RCSTAx” might refer to the Receive Status register for either EUSART1 or EUSART2

REGISTER 20-1: TXSTAx: TRANSMIT STATUS AND CONTROL REGISTER

R/W-0	R/W-0	R/W-0	R/W-0	R/W-0	R/W-0	R-1	R/W-0
CSRC	TX9	TXEN	SYNC	SENDB	BRGH	TRMT	TX9D
bit 7							bit 0

Legend:			
R = Readable bit	W = Writable bit	U = Unimplemented bit, read as ‘0’	
-n = Value at POR	‘1’ = Bit is set	‘0’ = Bit is cleared	x = Bit is unknown

bit 7 **CSRC:** Clock Source Select bit

Asynchronous mode:
Don’t care.

Synchronous mode:
1 = Master mode (clock generated internally from BRG)
0 = Slave mode (clock from external source)

bit 6 **TX9:** 9-bit Transmit Enable bit

1 = Selects 9-bit transmission
0 = Selects 8-bit transmission

bit 5 **TXEN:** Transmit Enable bit

1 = Transmit enabled
0 = Transmit disabled

Note: SREN/CREN overrides TXEN in Sync mode.

bit 4 **SYNC:** EUSART Mode Select bit

1 = Synchronous mode
0 = Asynchronous mode

bit 3 **SENDB:** Send Break Character bit

Asynchronous mode:
1 = Send Sync Break on next transmission (cleared by hardware upon completion)
0 = Sync Break transmission completed

Synchronous mode:
Don’t care.

bit 2 **BRGH:** High Baud Rate Select bit

Asynchronous mode:
1 = High speed
0 = Low speed

Synchronous mode:
Unused in this mode.

bit 1 **TRMT:** Transmit Shift Register Status bit

1 = TSRx empty
0 = TSRx full

bit 0 **TX9D:** Ninth bit of Transmit Data

Can be address/data bit or a parity bit.

© 2008 Microchip Technology Inc.

REGISTER 20-2: RCSTAx: RECEIVE STATUS AND CONTROL REGISTER

R/W-0	R/W-0	R/W-0	R/W-0	R/W-0	R-0	R-0	R-x
SPEN	RX9	SREN	CREN	ADDEN	FERR	OERR	RX9D
bit 7							bit 0

Legend:			
R = Readable bit	W = Writable bit	U = Unimplemented bit, read as ‘0’	
-n = Value at POR	‘1’ = Bit is set	‘0’ = Bit is cleared	x = Bit is unknown

bit 7 **SPEN:** Serial Port Enable bit
1 = Serial port enabled (configures RXx/DTx and TXx/CKx pins as serial port pins)
0 = Serial port disabled (held in Reset)

bit 6 **RX9:** 9-bit Receive Enable bit
1 = Selects 9-bit reception
0 = Selects 8-bit reception

bit 5 **SREN:** Single Receive Enable bit
Asynchronous mode:
Don’t care.
Synchronous mode – Master:
1 = Enables single receive
0 = Disables single receive
This bit is cleared after reception is complete.
Synchronous mode – Slave:
Don’t care.

bit 4 **CREN:** Continuous Receive Enable bit
Asynchronous mode:
1 = Enables receiver
0 = Disables receiver
Synchronous mode:
1 = Enables continuous receive until enable bit CREN is cleared (CREN overrides SREN)
0 = Disables continuous receive

bit 3 **ADDEN:** Address Detect Enable bit
Asynchronous mode 9-bit (RX9 = 1):
1 = Enables address detection, enables interrupt and loads the receive buffer when RSRx<8> is set
0 = Disables address detection, all bytes are received and ninth bit can be used as parity bit
Asynchronous mode 9-bit (RX9 = 0):
Don’t care.

bit 2 **FERR:** Framing Error bit
1 = Framing error (can be updated by reading RCREGx register and receiving next valid byte)
0 = No framing error

bit 1 **OERR:** Overrun Error bit
1 = Overrun error (can be cleared by clearing bit CREN)
0 = No overrun error

bit 0 **RX9D:** 9th bit of Received Data
This can be address/data bit or a parity bit and must be calculated by user firmware.

REGISTER 20-3: BAUDCONx: BAUD RATE CONTROL REGISTER

R/W-0	R-1	U-0	R/W-0	R/W-0	U-0	R/W-0	R/W-0
ABDOVF	RCIDL	—	SCKP	BRG16	—	WUE	ABDEN
bit 7							bit 0

Legend:			
R = Readable bit	W = Writable bit	U = Unimplemented bit, read as ‘0’	
-n = Value at POR	‘1’ = Bit is set	‘0’ = Bit is cleared	x = Bit is unknown

bit 7 **ABDOVF**: Auto-Baud Acquisition Rollover Status bit
1 = A BRG rollover has occurred during Auto-Baud Rate Detect mode (must be cleared in software)
0 = No BRG rollover has occurred

bit 6 **RCIDL**: Receive Operation Idle Status bit
1 = Receive operation is inactive
0 = Receive operation is active

bit 5 **Unimplemented:** Read as ‘0’

bit 4 **SCKP**: Synchronous Clock Polarity Select bit
Asynchronous mode:
Unused in this mode.
Synchronous mode:
1 = Idle state for clock (CKx) is a high level
0 = Idle state for clock (CKx) is a low level

bit 3 **BRG16:** 16-bit Baud Rate Register Enable bit
1 = 16-bit Baud Rate Generator – SPBRGHx and SPBRGx
0 = 8-bit Baud Rate Generator – SPBRGx only (Compatible mode), SPBRGHx value ignored

bit 2 **Unimplemented:** Read as ‘0’

bit 1 **WUE:** Wake-up Enable bit
Asynchronous mode:
1 = EUSART will continue to sample the RXx pin – interrupt generated on falling edge; bit cleared in hardware on following rising edge
0 = RXx pin not monitored or rising edge detected
Synchronous mode:
Unused in this mode.

bit 0 **ABDEN**: Auto-Baud Detect Enable bit
Asynchronous mode:
1 = Enable baud rate measurement on the next character. Requires reception of a Sync field (55h); cleared in hardware upon completion.
0 = Baud rate measurement disabled or completed
Synchronous mode:
Unused in this mode.

© 2008 Microchip Technology Inc.

20.1 Baud Rate Generator (BRG)

The BRG is a dedicated 8-bit or 16-bit generator that supports both the Asynchronous and Synchronous modes of the EUSART. By default, the BRG operates in 8-bit mode; setting the BRG16 bit (BAUDCONx<3>) selects 16-bit mode.

The SPBRGHx:SPBRGx register pair controls the period of a free running timer. In Asynchronous mode, bits BRGH (TXSTAx<2>) and BRG16 (BAUDCONx<3>) also control the baud rate. In Synchronous mode, BRGH is ignored. Table 20-1 shows the formula for computation of the baud rate for different EUSART modes which only apply in Master mode (internally generated clock).

Given the desired baud rate and FOSC, the nearest integer value for the SPBRGHx:SPBRGx registers can be calculated using the formulas in Table 20-1. From this, the error in baud rate can be determined. An example calculation is shown in Example 20-1. Typical baud rates and error values for the various Asynchronous modes are shown in Table 20-2. It may be advantageous to use the high baud rate (BRGH = 1) or the 16-bit BRG to reduce the baud rate error, or achieve a slow baud rate for a fast oscillator frequency.

Writing a new value to the SPBRGHx:SPBRGx registers causes the BRG timer to be reset (or cleared). This ensures the BRG does not wait for a timer overflow before outputting the new baud rate.

20.1.1 OPERATION IN POWER-MANAGED MODES

The device clock is used to generate the desired baud rate. When one of the power-managed modes is entered, the new clock source may be operating at a different frequency. This may require an adjustment to the value in the SPBRGx register pair.

20.1.2 SAMPLING

The data on the RXx pin (either RC7/RX1/DT1 or RG2/RX2/DT2) is sampled three times by a majority detect circuit to determine if a high or a low level is present at the RXx pin.

TABLE 20-1: BAUD RATE FORMULAS

Configuration Bits			BRG/EUSART Mode	Baud Rate Formula
SYNC	BRG16	BRGH		
0	0	0	8-bit/Asynchronous	FOSC/[64 (n + 1)]
0	0	1	8-bit/Asynchronous	FOSC/[16 (n + 1)]
0	1	0	16-bit/Asynchronous	
0	1	1	16-bit/Asynchronous	FOSC/[4 (n + 1)]
1	0	x	8-bit/Synchronous	
1	1	x	16-bit/Synchronous	

Legend: x = Don't care, n = value of SPBRGHx:SPBRGx register pair

EXAMPLE 20-1: CALCULATING BAUD RATE ERROR

For a device with FOSC of 16 MHz, desired baud rate of 9600, Asynchronous mode, 8-bit BRG:

Desired Baud Rate = FOSC/(64 ([SPBRGHx:SPBRGx] + 1))

Solving for SPBRGHx:SPBRGx:

X = ((FOSC/Desired Baud Rate)/64) – 1

= ((16000000/9600)/64) – 1

= [25.042] = 25

Calculated Baud Rate= 16000000/(64 (25 + 1))

= 9615

Error = (Calculated Baud Rate – Desired Baud Rate)/Desired Baud Rate

= (9615 – 9600)/9600 = 0.16%

TABLE 20-2: REGISTERS ASSOCIATED WITH BAUD RATE GENERATOR

Name	Bit 7	Bit 6	Bit 5	Bit 4	Bit 3	Bit 2	Bit 1	Bit 0	Reset Values on page
TXSTAx	CSRC	TX9	TXEN	SYNC	SENDB	BRGH	TRMT	TX9D	59
RCSTAx	SPEN	RX9	SREN	CREN	ADDEN	FERR	OERR	RX9D	59
BAUDCONx	ABDOVF	RCIDL	—	SCKP	BRG16	—	WUE	ABDEN	61
SPBRGHx	EUSARTx Baud Rate Generator Register High Byte								59
SPBRGx	EUSARTx Baud Rate Generator Register Low Byte								59

Legend: — = unimplemented, read as ‘0’. Shaded cells are not used by the BRG.

© 2008 Microchip Technology Inc.

TABLE 20-3: BAUD RATES FOR ASYNCHRONOUS MODES

BAUD RATE (K)	SYNC = 0, BRGH = 0, BRG16 = 0											
	FOSC = 40.000 MHz			FOSC = 20.000 MHz			FOSC = 10.000 MHz			FOSC = 8.000 MHz		
	Actual Rate (K)	% Error	SPBRG value (decimal)	Actual Rate (K)	% Error	SPBRG value (decimal)	Actual Rate (K)	% Error	SPBRG value (decimal)	Actual Rate (K)	% Error	SPBRG value (decimal)
0.3	—	—	—	—	—	—	—	—	—	—	—	—
1.2	—	—	—	1.221	1.73	255	1.202	0.16	129	1.201	-0.16	103
2.4	2.441	1.73	255	2.404	0.16	129	2.404	0.16	64	2.403	-0.16	51
9.6	9.615	0.16	64	9.766	1.73	31	9.766	1.73	15	9.615	-0.16	12
19.2	19.531	1.73	31	19.531	1.73	15	19.531	1.73	7	—	—	—
57.6	56.818	-1.36	10	62.500	8.51	4	52.083	-9.58	2	—	—	—
115.2	125.000	8.51	4	104.167	-9.58	2	78.125	-32.18	1	—	—	—

BAUD RATE (K)	SYNC = 0, BRGH = 0, BRG16 = 0								
	FOSC = 4.000 MHz			FOSC = 2.000 MHz			FOSC = 1.000 MHz		
	Actual Rate (K)	% Error	SPBRG value (decimal)	Actual Rate (K)	% Error	SPBRG value (decimal)	Actual Rate (K)	% Error	SPBRG value (decimal)
0.3	0.300	0.16	207	0.300	-0.16	103	0.300	-0.16	51
1.2	1.202	0.16	51	1.201	-0.16	25	1.201	-0.16	12
2.4	2.404	0.16	25	2.403	-0.16	12	—	—	—
9.6	8.929	-6.99	6	—	—	—	—	—	—
19.2	20.833	8.51	2	—	—	—	—	—	—
57.6	62.500	8.51	0	—	—	—	—	—	—
115.2	62.500	-45.75	0	—	—	—	—	—	—

BAUD RATE (K)	SYNC = 0, BRGH = 1, BRG16 = 0											
	FOSC = 40.000 MHz			FOSC = 20.000 MHz			FOSC = 10.000 MHz			FOSC = 8.000 MHz		
	Actual Rate (K)	% Error	SPBRG value (decimal)	Actual Rate (K)	% Error	SPBRG value (decimal)	Actual Rate (K)	% Error	SPBRG value (decimal)	Actual Rate (K)	% Error	SPBRG value (decimal)
0.3	—	—	—	—	—	—	—	—	—	—	—	—
1.2	—	—	—	—	—	—	—	—	—	—	—	—
2.4	—	—	—	—	—	—	2.441	1.73	255	2.403	-0.16	207
9.6	9.766	1.73	255	9.615	0.16	129	9.615	0.16	64	9.615	-0.16	51
19.2	19.231	0.16	129	19.231	0.16	64	19.531	1.73	31	19.230	-0.16	25
57.6	58.140	0.94	42	56.818	-1.36	21	56.818	-1.36	10	55.555	3.55	8
115.2	113.636	-1.36	21	113.636	-1.36	10	125.000	8.51	4	—	—	—

BAUD RATE (K)	SYNC = 0, BRGH = 1, BRG16 = 0								
	FOSC = 4.000 MHz			FOSC = 2.000 MHz			FOSC = 1.000 MHz		
	Actual Rate (K)	% Error	SPBRG value (decimal)	Actual Rate (K)	% Error	SPBRG value (decimal)	Actual Rate (K)	% Error	SPBRG value (decimal)
0.3	—	—	—	—	—	—	0.300	-0.16	207
1.2	1.202	0.16	207	1.201	-0.16	103	1.201	-0.16	51
2.4	2.404	0.16	103	2.403	-0.16	51	2.403	-0.16	25
9.6	9.615	0.16	25	9.615	-0.16	12	—	—	—
19.2	19.231	0.16	12	—	—	—	—	—	—
57.6	62.500	8.51	3	—	—	—	—	—	—
115.2	125.000	8.51	1	—	—	—	—	—	—

TABLE 20-3: BAUD RATES FOR ASYNCHRONOUS MODES (CONTINUED)

BAUD RATE (K)	SYNC = 0, BRGH = 0, BRG16 = 1											
	FOSC = 40.000 MHz			FOSC = 20.000 MHz			FOSC = 10.000 MHz			FOSC = 8.000 MHz		
	Actual Rate (K)	% Error	SPBRG value (decimal)	Actual Rate (K)	% Error	SPBRG value (decimal)	Actual Rate (K)	% Error	SPBRG value (decimal)	Actual Rate (K)	% Error	SPBRG value (decimal)
0.3	0.300	0.00	8332	0.300	0.02	4165	0.300	0.02	2082	0.300	-0.04	1665
1.2	1.200	0.02	2082	1.200	-0.03	1041	1.200	-0.03	520	1.201	-0.16	415
2.4	2.402	0.06	1040	2.399	-0.03	520	2.404	0.16	259	2.403	-0.16	207
9.6	9.615	0.16	259	9.615	0.16	129	9.615	0.16	64	9.615	-0.16	51
19.2	19.231	0.16	129	19.231	0.16	64	19.531	1.73	31	19.230	-0.16	25
57.6	58.140	0.94	42	56.818	-1.36	21	56.818	-1.36	10	55.555	3.55	8
115.2	113.636	-1.36	21	113.636	-1.36	10	125.000	8.51	4	—	—	—

BAUD RATE (K)	SYNC = 0, BRGH = 0, BRG16 = 1								
	FOSC = 4.000 MHz			FOSC = 2.000 MHz			FOSC = 1.000 MHz		
	Actual Rate (K)	% Error	SPBRG value (decimal)	Actual Rate (K)	% Error	SPBRG value (decimal)	Actual Rate (K)	% Error	SPBRG value (decimal)
0.3	0.300	0.04	832	0.300	-0.16	415	0.300	-0.16	207
1.2	1.202	0.16	207	1.201	-0.16	103	1.201	-0.16	51
2.4	2.404	0.16	103	2.403	-0.16	51	2.403	-0.16	25
9.6	9.615	0.16	25	9.615	-0.16	12	—	—	—
19.2	19.231	0.16	12	—	—	—	—	—	—
57.6	62.500	8.51	3	—	—	—	—	—	—
115.2	125.000	8.51	1	—	—	—	—	—	—

BAUD RATE (K)	SYNC = 0, BRGH = 1, BRG16 = 1 or SYNC = 1, BRG16 = 1											
	FOSC = 40.000 MHz			FOSC = 20.000 MHz			FOSC = 10.000 MHz			FOSC = 8.000 MHz		
	Actual Rate (K)	% Error	SPBRG value (decimal)	Actual Rate (K)	% Error	SPBRG value (decimal)	Actual Rate (K)	% Error	SPBRG value (decimal)	Actual Rate (K)	% Error	SPBRG value (decimal)
0.3	0.300	0.00	33332	0.300	0.00	16665	0.300	0.00	8332	0.300	-0.01	6665
1.2	1.200	0.00	8332	1.200	0.02	4165	1.200	0.02	2082	1.200	-0.04	1665
2.4	2.400	0.02	4165	2.400	0.02	2082	2.402	0.06	1040	2.400	-0.04	832
9.6	9.606	0.06	1040	9.596	-0.03	520	9.615	0.16	259	9.615	-0.16	207
19.2	19.193	-0.03	520	19.231	0.16	259	19.231	0.16	129	19.230	-0.16	103
57.6	57.803	0.35	172	57.471	-0.22	86	58.140	0.94	42	57.142	0.79	34
115.2	114.943	-0.22	86	116.279	0.94	42	113.636	-1.36	21	11.7647	-2.12	16

BAUD RATE (K)	SYNC = 0, BRGH = 1, BRG16 = 1 or SYNC = 1, BRG16 = 1								
	FOSC = 4.000 MHz			FOSC = 2.000 MHz			FOSC = 1.000 MHz		
	Actual Rate (K)	% Error	SPBRG value (decimal)	Actual Rate (K)	% Error	SPBRG value (decimal)	Actual Rate (K)	% Error	SPBRG value (decimal)
0.3	0.300	0.01	3332	0.300	-0.04	1665	0.300	-0.04	832
1.2	1.200	0.04	832	1.201	-0.16	415	1.201	-0.16	207
2.4	2.404	0.16	415	2.403	-0.16	207	2.403	-0.16	103
9.6	9.615	0.16	103	9.615	-0.16	51	9.615	-0.16	25
19.2	19.231	0.16	51	19.230	-0.16	25	19.230	-0.16	12
57.6	58.824	2.12	16	55.555	3.55	8	—	—	—
115.2	111.111	-3.55	8	—	—	—	—	—	—

© 2008 Microchip Technology Inc.

20.1.3 AUTO-BAUD RATE DETECT

The Enhanced USART module supports the automatic detection and calibration of baud rate. This feature is active only in Asynchronous mode and while the WUE bit is clear.

The automatic baud rate measurement sequence (Figure 20-1) begins whenever a Start bit is received and the ABDEN bit is set. The calculation is self-averaging.

In the Auto-Baud Rate Detect (ABD) mode, the clock to the BRG is reversed. Rather than the BRG clocking the incoming RXx signal, the RXx signal is timing the BRG. In ABD mode, the internal Baud Rate Generator is used as a counter to time the bit period of the incoming serial byte stream.

Once the ABDEN bit is set, the state machine will clear the BRG and look for a Start bit. The Auto-Baud Rate Detect must receive a byte with the value 55h (ASCII “U”, which is also the LIN bus Sync character) in order to calculate the proper bit rate. The measurement is taken over both a low and a high bit time in order to minimize any effects caused by asymmetry of the incoming signal. After a Start bit, the SPBRGx begins counting up, using the preselected clock source on the first rising edge of RXx. After eight bits on the RXx pin or the fifth rising edge, an accumulated value totalling the proper BRG period is left in the SPBRGHx:SPBRGx register pair. Once the 5th edge is seen (this should correspond to the Stop bit), the ABDEN bit is automatically cleared.

If a rollover of the BRG occurs (an overflow from FFFFh to 0000h), the event is trapped by the ABDOVF status bit (BAUDCONx<7>). It is set in hardware by BRG rollovers and can be set or cleared by the user in software. ABD mode remains active after rollover events and the ABDEN bit remains set (Figure 20-2).

While calibrating the baud rate period, the BRG registers are clocked at 1/8th the preconfigured clock rate. Note that the BRG clock will be configured by the BRG16 and BRGH bits. Independent of the BRG16 bit setting, both the SPBRGx and SPBRGHx will be used as a 16-bit counter. This allows the user to verify that no carry occurred for 8-bit modes by checking for 00h in the SPBRGHx register. Refer to Table 20-4 for counter clock rates to the BRG.

While the ABD sequence takes place, the EUSART state machine is held in Idle. The RCxIF interrupt is set once the fifth rising edge on RXx is detected. The value in the RCREGx needs to be read to clear the RCxIF interrupt. The contents of RCREGx should be discarded.

Note 1: If the WUE bit is set with the ABDEN bit, Auto-Baud Rate Detection will occur on the byte *following* the Break character.

2: It is up to the user to determine that the incoming character baud rate is within the range of the selected BRG clock source. Some combinations of oscillator frequency and EUSART baud rates are not possible due to bit error rates. Overall system timing and communication baud rates must be taken into consideration when using the Auto-Baud Rate Detection feature.

TABLE 20-4: BRG COUNTER CLOCK RATES

BRG16	BRGH	BRG Counter Clock
0	0	FOSC/512
0	1	FOSC/128
1	0	FOSC/128
1	1	FOSC/32

Note: During the ABD sequence, SPBRGx and SPBRGHx are both used as a 16-bit counter, independent of BRG16 setting.

20.1.3.1 ABD and EUSART Transmission

Since the BRG clock is reversed during ABD acquisition, the EUSART transmitter cannot be used during ABD. This means that whenever the ABDEN bit is set, TXREGx cannot be written to. Users should also ensure that ABDEN does not become set during a transmit sequence. Failing to do this may result in unpredictable EUSART operation.

FIGURE 20-1: AUTOMATIC BAUD RATE CALCULATION

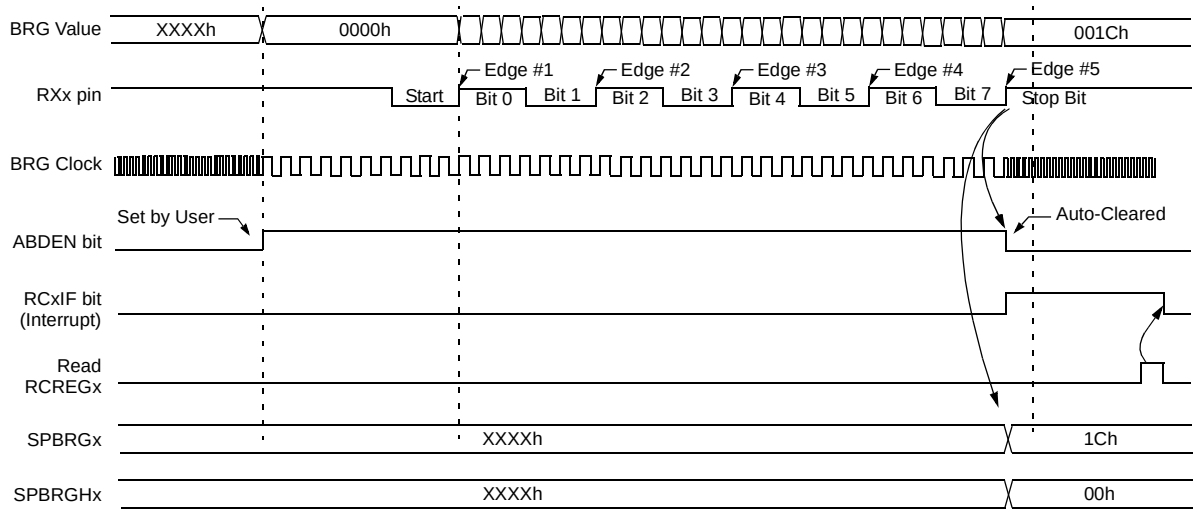

Note: The ABD sequence requires the EUSART module to be configured in Asynchronous mode and WUE = 0.

FIGURE 20-2: BRG OVERFLOW SEQUENCE

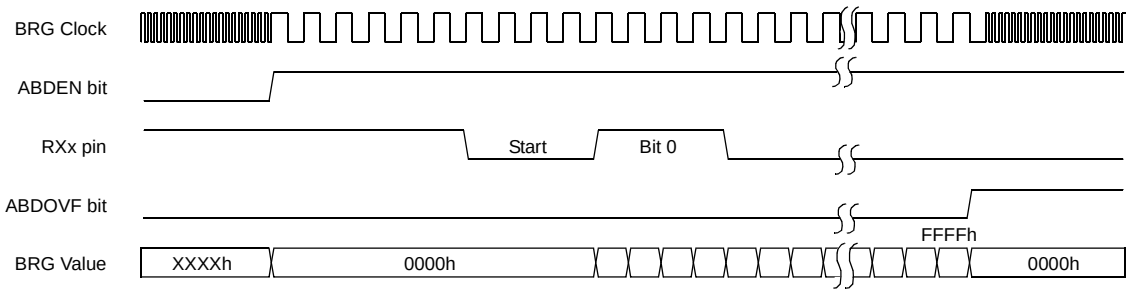

© 2008 Microchip Technology Inc.

20.2 EUSART Asynchronous Mode

The Asynchronous mode of operation is selected by clearing the SYNC bit (TXSTAx<4>). In this mode, the EUSART uses standard Non-Return-to-Zero (NRZ) format (one Start bit, eight or nine data bits and one Stop bit). The most common data format is 8 bits. An on-chip dedicated 8-bit/16-bit Baud Rate Generator can be used to derive standard baud rate frequencies from the oscillator.

The EUSART transmits and receives the LSb first. The EUSART's transmitter and receiver are functionally independent, but use the same data format and baud rate. The Baud Rate Generator produces a clock, either x16 or x64 of the bit shift rate depending on the BRGH and BRG16 bits (TXSTAx<2> and BAUDCONx<3>). Parity is not supported by the hardware, but can be implemented in software and stored as the 9th data bit.

When operating in Asynchronous mode, the EUSART module consists of the following important elements:

- Baud Rate Generator
- Sampling Circuit
- Asynchronous Transmitter
- Asynchronous Receiver
- Auto-Wake-up on Sync Break Character
- 12-bit Break Character Transmit
- Auto-Baud Rate Detection

20.2.1 EUSART ASYNCHRONOUS TRANSMITTER

The EUSART transmitter block diagram is shown in Figure 20-3. The heart of the transmitter is the Transmit (Serial) Shift Register (TSRx). The Shift register obtains its data from the Read/Write Transmit Buffer register, TXREGx. The TXREGx register is loaded with data in software. The TSRx register is not loaded until the Stop bit has been transmitted from the previous load. As soon as the Stop bit is transmitted, the TSRx is loaded with new data from the TXREGx register (if available).

Once the TXREGx register transfers the data to the TSRx register (occurs in one TCY), the TXREGx register is empty and the TXxIF flag bit (PIR1<4>) is set. This interrupt can be enabled or disabled by setting or clearing the interrupt enable bit, TXxIE (PIE1<4>). TXxIF will be set regardless of the state of TXxIE; it cannot be cleared in software. TXxIF is also not cleared immediately upon loading TXREGx, but becomes valid in the second instruction cycle following the load instruction. Polling TXxIF immediately following a load of TXREGx will return invalid results.

While TXxIF indicates the status of the TXREGx register, another bit, TRMT (TXSTAx<1>), shows the status of the TSRx register. TRMT is a read-only bit which is set when the TSRx register is empty. No interrupt logic is tied to this bit so the user has to poll this bit in order to determine if the TSRx register is empty.

Note 1:	The TSRx register is not mapped in data memory so it is not available to the user.
2:	Flag bit, TXxIF, is set when enable bit TXEN is set.

To set up an Asynchronous Transmission:

1. Initialize the SPBRGHx:SPBRGx registers for the appropriate baud rate. Set or clear the BRGH and BRG16 bits, as required, to achieve the desired baud rate.
2. Enable the asynchronous serial port by clearing bit, SYNC, and setting bit, SPEN.
3. If interrupts are desired, set enable bit, TXxIE.
4. If 9-bit transmission is desired, set transmit bit, TX9. Can be used as address/data bit.
5. Enable the transmission by setting bit, TXEN, which will also set bit, TXxIF.
6. If 9-bit transmission is selected, the ninth bit should be loaded in bit, TX9D.
7. Load data to the TXREGx register (starts transmission).
8. If using interrupts, ensure that the GIE and PEIE bits in the INTCON register (INTCON<7:6>) are set.

FIGURE 20-3: EUSART TRANSMIT BLOCK DIAGRAM

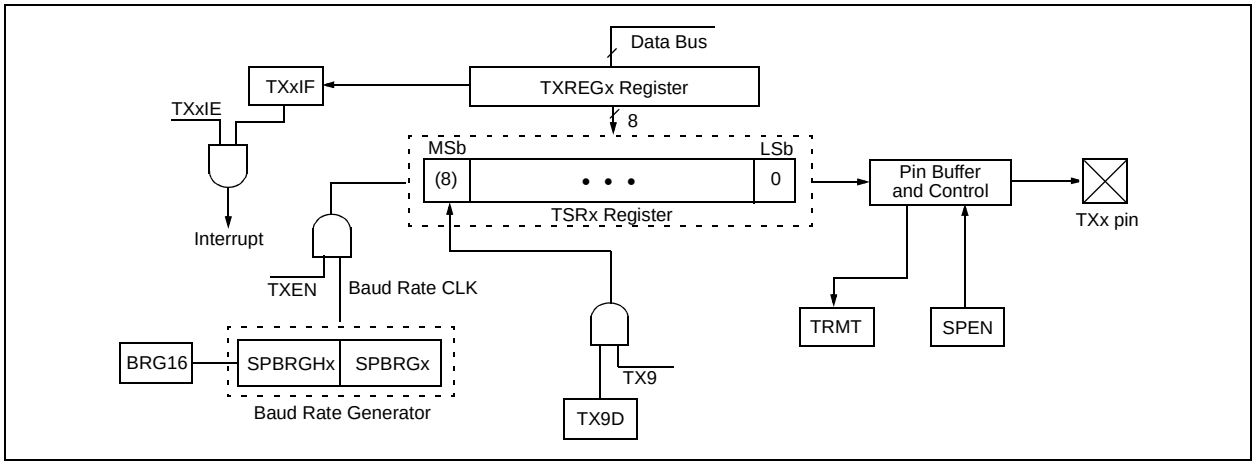

FIGURE 20-4: ASYNCHRONOUS TRANSMISSION

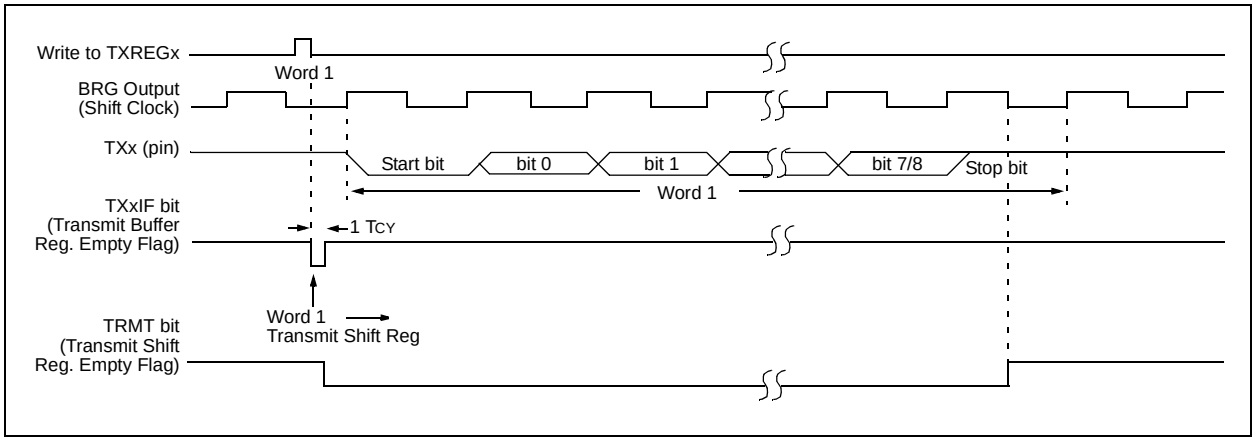

FIGURE 20-5: ASYNCHRONOUS TRANSMISSION (BACK TO BACK)

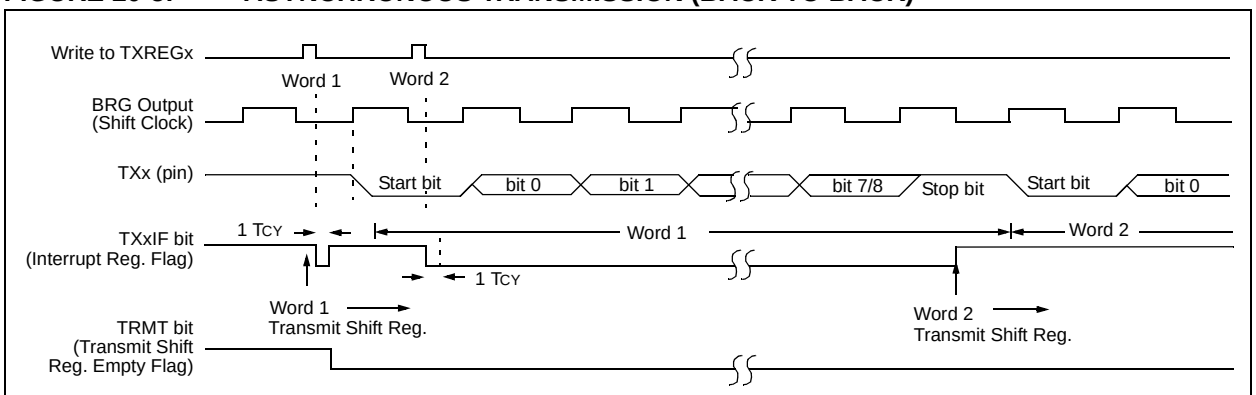

Note: This timing diagram shows two consecutive transmissions.

© 2008 Microchip Technology Inc.

TABLE 20-5: REGISTERS ASSOCIATED WITH ASYNCHRONOUS TRANSMISSION

Name	Bit 7	Bit 6	Bit 5	Bit 4	Bit 3	Bit 2	Bit 1	Bit 0	Reset Values on page
INTCON	GIE/GIEH	PEIE/GIEL	TMR0IE	INT0IE	RBIE	TMR0IF	INT0IF	RBIF	57
PIR1	PSPIF	ADIF	RC1IF	TX1IF	SSP1IF	CCP1IF	TMR2IF	TMR1IF	60
PIE1	PSPIE	ADIE	RC1IE	TX1IE	SSP1IE	CCP1IE	TMR2IE	TMR1IE	60
IPR1	PSPIP	ADIP	RC1IP	TX1IP	SSP1IP	CCP1IP	TMR2IP	TMR1IP	60
TRISC	TRISC7	TRISC6	TRISC5	TRISC4	TRISC3	TRISC2	TRISC1	TRISC0	60
TRISG	—	—	—	TRISG4	TRISG3	TRISG2	TRISG1	TRISG0	60
RCSTAx	SPEN	RX9	SREN	CREN	ADDEN	FERR	OERR	RX9D	59
TXREGx	EUSARTx Transmit Register								59
TXSTAx	CSRC	TX9	TXEN	SYNC	SENDB	BRGH	TRMT	TX9D	59
BAUDCONx	ABDOVF	RCIDL	—	SCKP	BRG16	—	WUE	ABDEN	61
SPBRGHx	EUSARTx Baud Rate Generator Register High Byte								61
SPBRGx	EUSARTx Baud Rate Generator Register Low Byte								59

Legend: — = unimplemented locations read as ‘0’. Shaded cells are not used for asynchronous transmission.

20.2.2 EUSART ASYNCHRONOUS RECEIVER

The receiver block diagram is shown in Figure 20-6. The data is received on the RXx pin and drives the data recovery block. The data recovery block is actually a high-speed shifter operating at x16 times the baud rate, whereas the main receive serial shifter operates at the bit rate or at FOSC. This mode would typically be used in RS-232 systems.

To set up an Asynchronous Reception:

1. Initialize the SPBRGHx:SPBRGx registers for the appropriate baud rate. Set or clear the BRGH and BRG16 bits, as required, to achieve the desired baud rate.
2. Enable the asynchronous serial port by clearing bit, SYNC, and setting bit, SPEN.
3. If interrupts are desired, set enable bit, RCxIE.
4. If 9-bit reception is desired, set bit, RX9.
5. Enable the reception by setting bit, CREN.
6. Flag bit, RCxIF, will be set when reception is complete and an interrupt will be generated if enable bit, RCxIE, was set.
7. Read the RCSTAx register to get the 9th bit (if enabled) and determine if any error occurred during reception.
8. Read the 8-bit received data by reading the RCREGx register.
9. If any error occurred, clear the error by clearing enable bit, CREN.
10. If using interrupts, ensure that the GIE and PEIE bits in the INTCON register (INTCON<7:6>) are set.

20.2.3 SETTING UP 9-BIT MODE WITH ADDRESS DETECT

This mode would typically be used in RS-485 systems. To set up an Asynchronous Reception with Address Detect Enable:

1. Initialize the SPBRGHx:SPBRGx registers for the appropriate baud rate. Set or clear the BRGH and BRG16 bits, as required, to achieve the desired baud rate.
2. Enable the asynchronous serial port by clearing the SYNC bit and setting the SPEN bit.
3. If interrupts are required, set the RCEN bit and select the desired priority level with the RCxIP bit.
4. Set the RX9 bit to enable 9-bit reception.
5. Set the ADDEN bit to enable address detect.
6. Enable reception by setting the CREN bit.
7. The RCxIF bit will be set when reception is complete. The interrupt will be Acknowledged if the RCxIE and GIE bits are set.
8. Read the RCSTAx register to determine if any error occurred during reception, as well as read bit 9 of data (if applicable).
9. Read RCREGx to determine if the device is being addressed.
10. If any error occurred, clear the CREN bit.
11. If the device has been addressed, clear the ADDEN bit to allow all received data into the receive buffer and interrupt the CPU.

FIGURE 20-6: EUSART RECEIVE BLOCK DIAGRAM

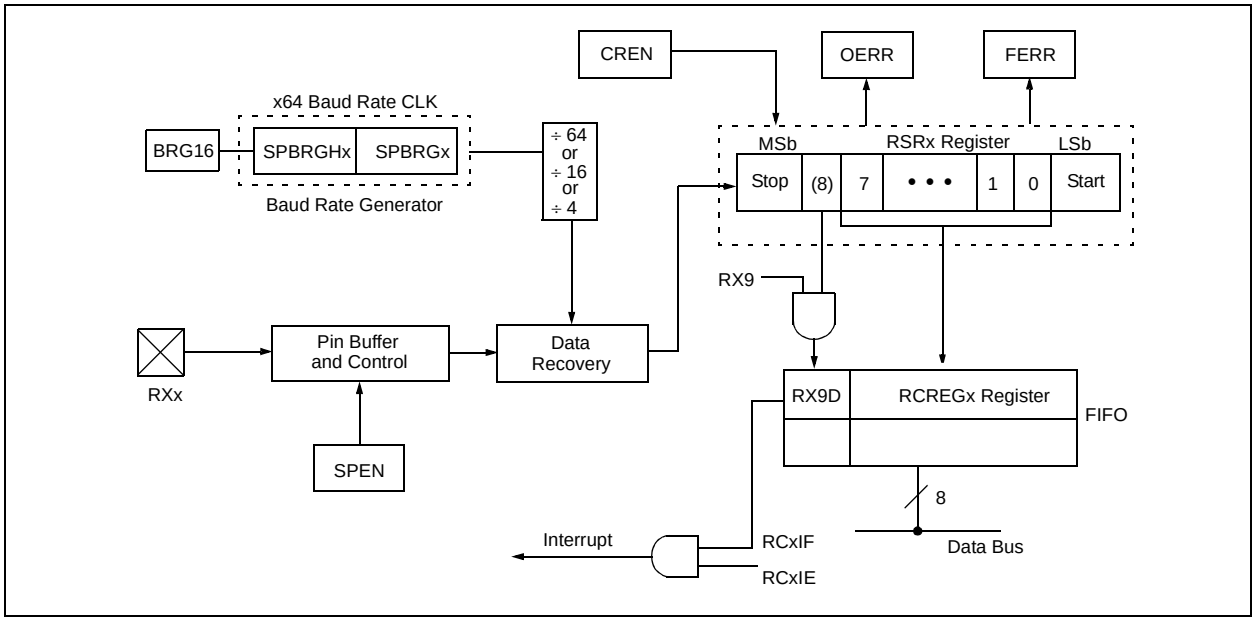

© 2008 Microchip Technology Inc.

FIGURE 20-7: ASYNCHRONOUS RECEPTION

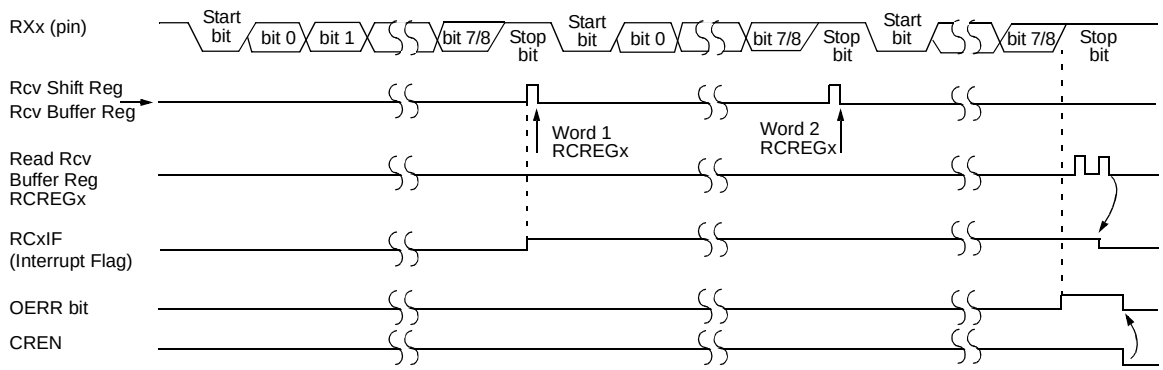

Note: This timing diagram shows three words appearing on the RXx input. The RCREGx (receive buffer) is read after the third word causing the OERR (Overrun) bit to be set.

TABLE 20-6: REGISTERS ASSOCIATED WITH ASYNCHRONOUS RECEPTION

Name	Bit 7	Bit 6	Bit 5	Bit 4	Bit 3	Bit 2	Bit 1	Bit 0	Reset Values on page
INTCON	GIE/GIEH	PEIE/GIEL	TMR0IE	INT0IE	RBIE	TMR0IF	INT0IF	RBIF	57
PIR1	PSPIF	ADIF	RC1IF	TX1IF	SSP1IF	CCP1IF	TMR2IF	TMR1IF	60
PIE1	PSPIE	ADIE	RC1IE	TX1IE	SSP1IE	CCP1IE	TMR2IE	TMR1IE	60
IPR1	PSPIP	ADIP	RC1IP	TX1IP	SSP1IP	CCP1IP	TMR2IP	TMR1IP	60
TRISC	TRISC7	TRISC6	TRISC5	TRISC4	TRISC3	TRISC2	TRISC1	TRISC0	60
TRISG	—	—	—	TRISG4	TRISG3	TRISG2	TRISG1	TRISG0	60
RCSTAx	SPEN	RX9	SREN	CREN	ADDEN	FERR	OERR	RX9D	59
RCREGx	EUSARTx Receive Register								59
TXSTAx	CSRC	TX9	TXEN	SYNC	SENDB	BRGH	TRMT	TX9D	59
BAUDCONx	ABDOVF	RCIDL	—	SCKP	BRG16	—	WUE	ABDEN	61
SPBRGHx	EUSARTx Baud Rate Generator Register High Byte								61
SPBRGx	EUSARTx Baud Rate Generator Register Low Byte								59

Legend: — = unimplemented locations read as '0'. Shaded cells are not used for asynchronous reception.

20.2.4 AUTO-WAKE-UP ON SYNC BREAK CHARACTER

During Sleep mode, all clocks to the EUSART are suspended. Because of this, the Baud Rate Generator is inactive and a proper byte reception cannot be performed. The auto-wake-up feature allows the controller to wake-up due to activity on the RXx/DTx line, while the EUSART is operating in Asynchronous mode.

The auto-wake-up feature is enabled by setting the WUE bit (BAUDCONx<1>). Once set, the typical receive sequence on RXx/DTx is disabled and the EUSART remains in an Idle state, monitoring for a wake-up event independent of the CPU mode. A wake-up event consists of a high-to-low transition on the RXx/DTx line. (This coincides with the start of a Sync Break or a Wake-up Signal character for the LIN protocol.)

Following a wake-up event, the module generates an RCxIF interrupt. The interrupt is generated synchronously to the Q clocks in normal operating modes (Figure 20-8) and asynchronously, if the device is in Sleep mode (Figure 20-9). The interrupt condition is cleared by reading the RCREGx register.

The WUE bit is automatically cleared once a low-to-high transition is observed on the RXx line following the wake-up event. At this point, the EUSART module is inactive and returns to normal operation. This signals to the user that the Sync Break event is over.

20.2.4.1 Special Considerations Using Auto-Wake-up

Since auto-wake-up functions by sensing rising edge transitions on RXx/DTx, information with any state changes before the Stop bit may signal a false end-of-character and cause data or framing errors. To work properly, therefore, the initial character in the transmission must be all '0's. This can be 00h (8 bytes) for standard RS-232 devices or 000h (12 bits) for LIN bus.

Oscillator start-up time must also be considered, especially in applications using oscillators with longer start-up intervals (i.e., XT or HS mode). The Sync Break (or Wake-up Signal) character must be of sufficient length and be followed by a sufficient interval to allow enough time for the selected oscillator to start and provide proper initialization of the EUSART.

20.2.4.2 Special Considerations Using the WUE Bit

The timing of WUE and RCxIF events may cause some confusion when it comes to determining the validity of received data. As noted, setting the WUE bit places the EUSART in an inactive state. The wake-up event causes a receive interrupt by setting the RCxIF bit. The WUE bit is cleared after this when a rising edge is seen on RXx/DTx. The interrupt condition is then cleared by reading the RCREGx register. Ordinarily, the data in RCREGx will be dummy data and should be discarded.

The fact that the WUE bit has been cleared (or is still set) and the RCxIF flag is set should not be used as an indicator of the integrity of the data in RCREGx. Users should consider implementing a parallel method in firmware to verify received data integrity.

To assure that no actual data is lost, check the RCIDL bit to verify that a receive operation is not in process. If a receive operation is not occurring, the WUE bit may then be set just prior to entering the Sleep mode.

FIGURE 20-8: AUTO-WAKE-UP BIT (WUE) TIMINGS DURING NORMAL OPERATION

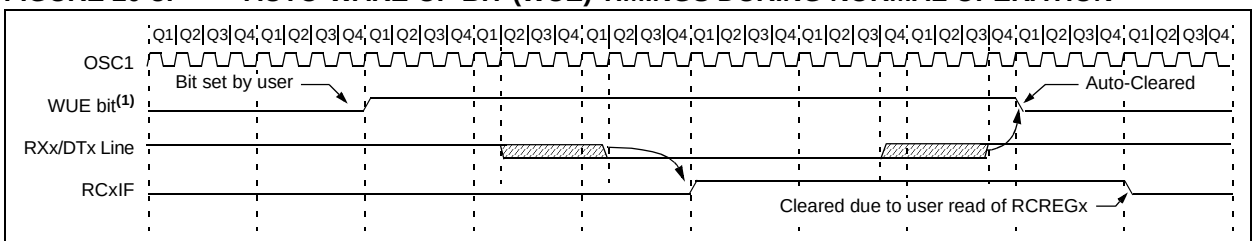

Note 1: The EUSART remains inactive while the WUE bit is set.

FIGURE 20-9: AUTO-WAKE-UP BIT (WUE) TIMINGS DURING SLEEP

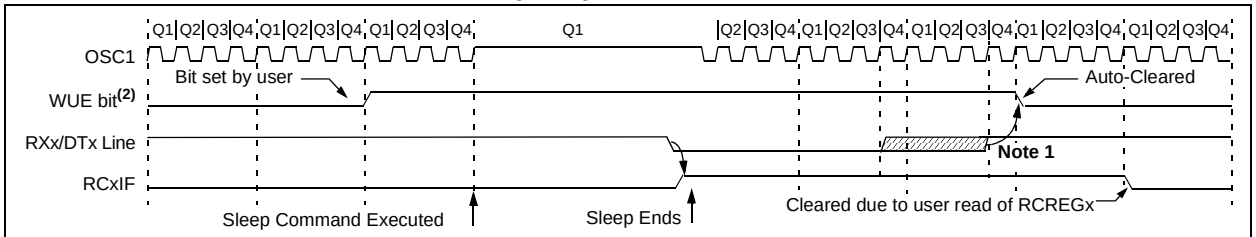

Note 1: If the wake-up event requires long oscillator warm-up time, the auto-clear of the WUE bit can occur before the oscillator is ready. This sequence should not depend on the presence of Q clocks.

2: The EUSART remains inactive while the WUE bit is set.

© 2008 Microchip Technology Inc.

20.2.5 BREAK CHARACTER SEQUENCE

The EUSART module has the capability of sending the special Break character sequences that are required by the LIN bus standard. The Break character transmit consists of a Start bit, followed by twelve '0' bits and a Stop bit. The frame Break character is sent whenever the SENDB and TXEN bits (TXSTAx<3> and TXSTAx<5>) are set while the Transmit Shift register is loaded with data. Note that the value of data written to TXREGx will be ignored and all '0's will be transmitted.

The SENDB bit is automatically reset by hardware after the corresponding Stop bit is sent. This allows the user to preload the transmit FIFO with the next transmit byte following the Break character (typically, the Sync character in the LIN specification).

Note that the data value written to the TXREGx for the Break character is ignored. The write simply serves the purpose of initiating the proper sequence.

The TRMT bit indicates when the transmit operation is active or Idle, just as it does during normal transmission. See Figure 20-10 for the timing of the Break character sequence.

20.2.5.1 Break and Sync Transmit Sequence

The following sequence will send a message frame header made up of a Break, followed by an Auto-Baud Sync byte. This sequence is typical of a LIN bus master.

1. Configure the EUSART for the desired mode.
2. Set the TXEN and SENDB bits to set up the Break character.
3. Load the TXREGx with a dummy character to initiate transmission (the value is ignored).
4. Write '55h' to TXREGx to load the Sync character into the transmit FIFO buffer.
5. After the Break has been sent, the SENDB bit is reset by hardware. The Sync character now transmits in the preconfigured mode.

When the TXREGx becomes empty, as indicated by the TXxIF, the next data byte can be written to TXREGx.

20.2.6 RECEIVING A BREAK CHARACTER

The Enhanced USART module can receive a Break character in two ways.

The first method forces configuration of the baud rate at a frequency of 9/13 the typical speed. This allows for the Stop bit transition to be at the correct sampling location (13 bits for Break versus Start bit and 8 data bits for typical data).

The second method uses the auto-wake-up feature described in **Section 20.2.4 "Auto-Wake-up on Sync Break Character"**. By enabling this feature, the EUSART will sample the next two transitions on RXx/DTx, cause an RCxIF interrupt and receive the next data byte followed by another interrupt.

Note that following a Break character, the user will typically want to enable the Auto-Baud Rate Detect feature. For both methods, the user can set the ABD bit once the TXxIF interrupt is observed.

FIGURE 20-10: SEND BREAK CHARACTER SEQUENCE

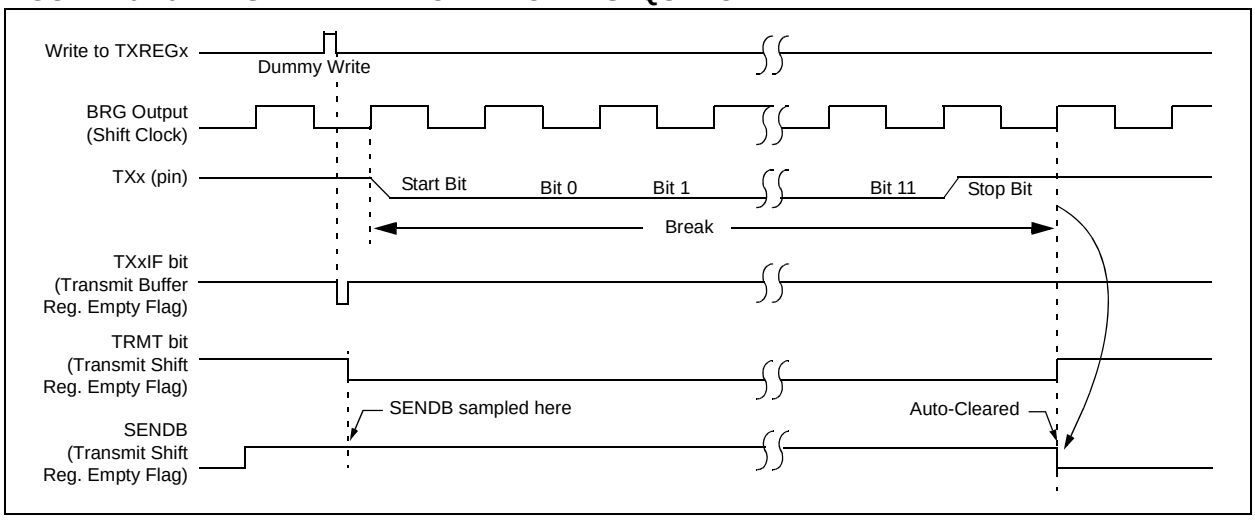

20.3 EUSART Synchronous Master Mode

The Synchronous Master mode is entered by setting the CSRC bit (TXSTAx<7>). In this mode, the data is transmitted in a half-duplex manner (i.e., transmission and reception do not occur at the same time). When transmitting data, the reception is inhibited and vice versa. Synchronous mode is entered by setting bit SYNC (TXSTAx<4>). In addition, enable bit SPEN (RCSTAx<7>) is set in order to configure the TXx and RXx pins to CKx (clock) and DTx (data) lines, respectively.

The Master mode indicates that the processor transmits the master clock on the CKx line. Clock polarity is selected with the SCKP bit (BAUDCONx<4>); setting SCKP sets the Idle state on CKx as high, while clearing the bit sets the Idle state as low. This option is provided to support Microwire devices with this module.

20.3.1 EUSART SYNCHRONOUS MASTER TRANSMISSION

The EUSART transmitter block diagram is shown in Figure 20-3. The heart of the transmitter is the Transmit (Serial) Shift Register (TSRx). The Shift register obtains its data from the Read/Write Transmit Buffer register, TXREGx. The TXREGx register is loaded with data in software. The TSRx register is not loaded until the last bit has been transmitted from the previous load. As soon as the last bit is transmitted, the TSRx is loaded with new data from the TXREGx (if available).

Once the TXREGx register transfers the data to the TSRx register (occurs in one TCY), the TXREGx is empty and the TXxIF flag bit is set. The interrupt can be enabled or disabled by setting or clearing the interrupt enable bit, TXxIE. TXxIF is set regardless of the state of enable bit TXxIE; it cannot be cleared in software. It will reset only when new data is loaded into the TXREGx register.

While flag bit TXxIF indicates the status of the TXREGx register, another bit, TRMT (TXSTAx<1>), shows the status of the TSRx register. TRMT is a read-only bit which is set when the TSRx is empty. No interrupt logic is tied to this bit, so the user must poll this bit in order to determine if the TSRx register is empty. The TSRx is not mapped in data memory so it is not available to the user.

To set up a Synchronous Master Transmission:

1. Initialize the SPBRGHx:SPBRGx registers for the appropriate baud rate. Set or clear the BRG16 bit, as required, to achieve the desired baud rate.
2. Enable the synchronous master serial port by setting bits SYNC, SPEN and CSRC.
3. If interrupts are desired, set enable bit TXxIE.
4. If 9-bit transmission is desired, set bit TX9.
5. Enable the transmission by setting bit TXEN.
6. If 9-bit transmission is selected, the ninth bit should be loaded in bit TX9D.
7. Start transmission by loading data to the TXREGx register.
8. If using interrupts, ensure that the GIE and PEIE bits in the INTCON register (INTCON<7:6>) are set.

FIGURE 20-11: SYNCHRONOUS TRANSMISSION

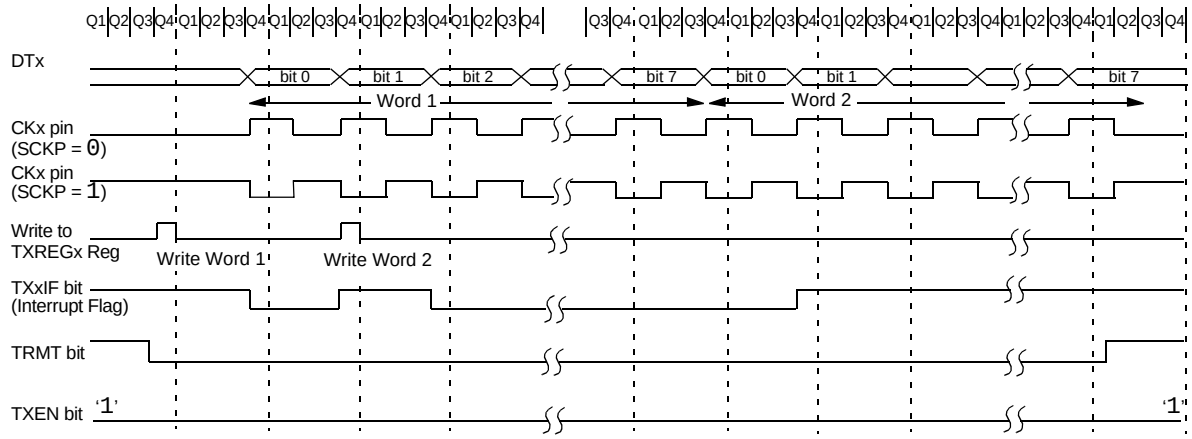

Note: Sync Master mode, SPBRGx = 0, continuous transmission of two 8-bit words.

© 2008 Microchip Technology Inc.

FIGURE 20-12: SYNCHRONOUS TRANSMISSION (THROUGH TXEN)

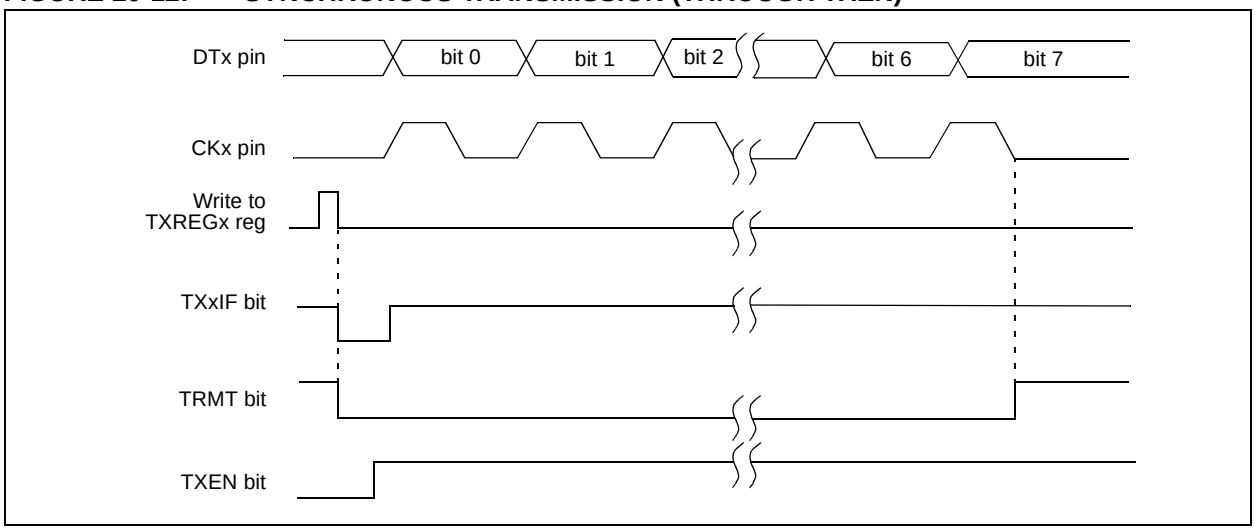

TABLE 20-7: REGISTERS ASSOCIATED WITH SYNCHRONOUS MASTER TRANSMISSION

Name	Bit 7	Bit 6	Bit 5	Bit 4	Bit 3	Bit 2	Bit 1	Bit 0	Reset Values on page
INTCON	GIE/GIEH	PEIE/GIEL	TMR0IE	INT0IE	RBIE	TMR0IF	INT0IF	RBIF	57
PIR1	PSPIF	ADIF	RC1IF	TX1IF	SSP1IF	CCP1IF	TMR2IF	TMR1IF	60
PIE1	PSPIE	ADIE	RC1IE	TX1IE	SSP1IE	CCP1IE	TMR2IE	TMR1IE	60
IPR1	PSPIP	ADIP	RC1IP	TX1IP	SSP1IP	CCP1IP	TMR2IP	TMR1IP	60
TRISC	TRISC7	TRISC6	TRISC5	TRISC4	TRISC3	TRISC2	TRISC1	TRISC0	60
TRISG	—	—	—	TRISG4	TRISG3	TRISG2	TRISG1	TRISG0	60
RCSTAx	SPEN	RX9	SREN	CREN	ADDEN	FERR	OERR	RX9D	59
TXREGx	EUSARTx Transmit Register								59
TXSTAx	CSRC	TX9	TXEN	SYNC	SENDB	BRGH	TRMT	TX9D	59
BAUDCONx	ABDOVF	RCIDL	—	SCKP	BRG16	—	WUE	ABDEN	61
SPBRGHx	EUSARTx Baud Rate Generator Register High Byte								61
SPBRGx	EUSARTx Baud Rate Generator Register Low Byte								59

Legend: — = unimplemented, read as ‘0’. Shaded cells are not used for synchronous master transmission.

20.3.2 EUSART SYNCHRONOUS MASTER RECEPTION

Once Synchronous mode is selected, reception is enabled by setting either the Single Receive Enable bit, SREN (RCSTAx<5>), or the Continuous Receive Enable bit, CREN (RCSTAx<4>). Data is sampled on the RXx pin on the falling edge of the clock.

If enable bit SREN is set, only a single word is received. If enable bit CREN is set, the reception is continuous until CREN is cleared. If both bits are set, then CREN takes precedence.

To set up a Synchronous Master Reception:

1. Initialize the SPBRGHx:SPBRGx registers for the appropriate baud rate. Set or clear the BRG16 bit, as required, to achieve the desired baud rate.
2. Enable the synchronous master serial port by setting bits, SYNC, SPEN and CSRC.
3. Ensure bits, CREN and SREN, are clear.
4. If interrupts are desired, set enable bit, RCxIE.
5. If 9-bit reception is desired, set bit, RX9.
6. If a single reception is required, set bit, SREN. For continuous reception, set bit, CREN.
7. Interrupt flag bit, RCxIF, will be set when reception is complete and an interrupt will be generated if the enable bit, RCxIE, was set.
8. Read the RCSTAx register to get the 9th bit (if enabled) and determine if any error occurred during reception.
9. Read the 8-bit received data by reading the RCREGx register.
10. If any error occurred, clear the error by clearing bit, CREN.
11. If using interrupts, ensure that the GIE and PEIE bits in the INTCON register (INTCON<7:6>) are set.

FIGURE 20-13: SYNCHRONOUS RECEPTION (MASTER MODE, SREN)

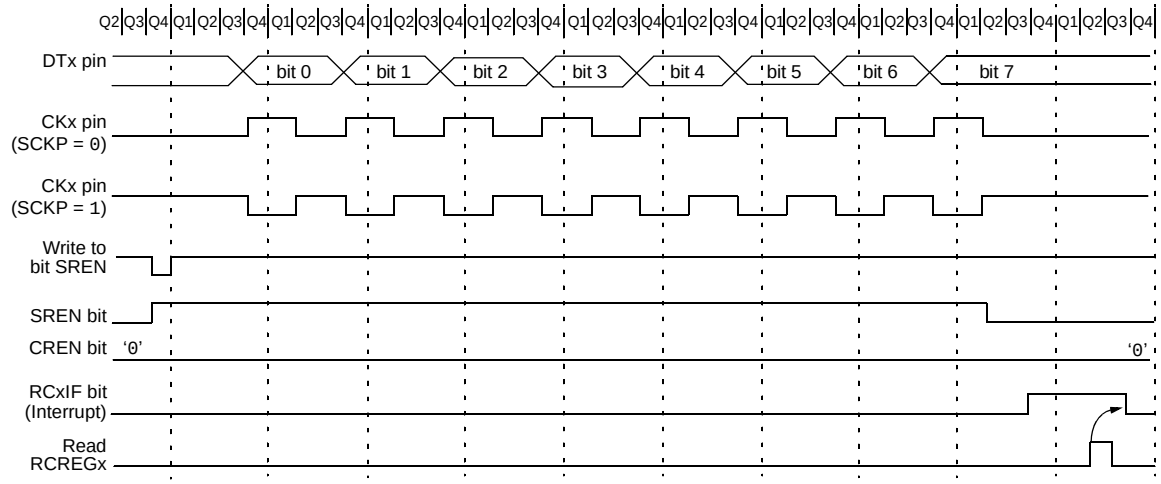

Note: Timing diagram demonstrates Sync Master mode with bit SREN = 1 and bit BRGH = 0.

© 2008 Microchip Technology Inc.

TABLE 20-8: REGISTERS ASSOCIATED WITH SYNCHRONOUS MASTER RECEPTION

Name	Bit 7	Bit 6	Bit 5	Bit 4	Bit 3	Bit 2	Bit 1	Bit 0	Reset Values on page
INTCON	GIE/GIEH	PEIE/GIEL	TMR0IE	INT0IE	RBIE	TMR0IF	INT0IF	RBIF	57
PIR1	PSPIF	ADIF	RC1IF	TX1IF	SSP1IF	CCP1IF	TMR2IF	TMR1IF	60
PIE1	PSPIE	ADIE	RC1IE	TX1IE	SSP1IE	CCP1IE	TMR2IE	TMR1IE	60
IPR1	PSPIP	ADIP	RC1IP	TX1IP	SSP1IP	CCP1IP	TMR2IP	TMR1IP	60
TRISC	TRISC7	TRISC6	TRISC5	TRISC4	TRISC3	TRISC2	TRISC1	TRISC0	60
TRISG	—	—	—	TRISG4	TRISG3	TRISG2	TRISG1	TRISG0	60
RCSTAx	SPEN	RX9	SREN	CREN	ADDEN	FERR	OERR	RX9D	59
RCREGx	EUSARTx Receive Register								59
TXSTAx	CSRC	TX9	TXEN	SYNC	SENDB	BRGH	TRMT	TX9D	59
BAUDCONx	ABDOVF	RCIDL	—	SCKP	BRG16	—	WUE	ABDEN	61
SPBRGHx	EUSARTx Baud Rate Generator Register High Byte								61
SPBRGx	EUSARTx Baud Rate Generator Register Low Byte								59

Legend: — = unimplemented, read as ‘0’. Shaded cells are not used for synchronous master reception.

20.4 EUSART Synchronous Slave Mode

Synchronous Slave mode is entered by clearing bit, CSRC (TXSTAx<7>). This mode differs from the Synchronous Master mode in that the shift clock is supplied externally at the CKx pin (instead of being supplied internally in Master mode). This allows the device to transfer or receive data while in any low-power mode.

20.4.1 EUSART SYNCHRONOUS SLAVE TRANSMISSION

The operation of the Synchronous Master and Slave modes is identical, except in the case of Sleep mode.

If two words are written to the TXREGx and then the SLEEP instruction is executed, the following will occur:

a) The first word will immediately transfer to the TSRx register and transmit.
b) The second word will remain in the TXREGx register.
c) Flag bit, TXxIF, will not be set.
d) When the first word has been shifted out of TSRx, the TXREGx register will transfer the second word to the TSRx and flag bit, TXxIF, will now be set.
e) If enable bit, TXxIE, is set, the interrupt will wake the chip from Sleep. If the global interrupt is enabled, the program will branch to the interrupt vector.

To set up a Synchronous Slave Transmission:

1. Enable the synchronous slave serial port by setting bits, SYNC and SPEN, and clearing bit, CSRC.
2. Clear bits, CREN and SREN.
3. If interrupts are desired, set enable bit, TXxIE.
4. If 9-bit transmission is desired, set bit, TX9.
5. Enable the transmission by setting enable bit, TXEN.
6. If 9-bit transmission is selected, the ninth bit should be loaded in bit, TX9D.
7. Start transmission by loading data to the TXREGx register.
8. If using interrupts, ensure that the GIE and PEIE bits in the INTCON register (INTCON<7:6>) are set.

TABLE 20-9: REGISTERS ASSOCIATED WITH SYNCHRONOUS SLAVE TRANSMISSION

Name	Bit 7	Bit 6	Bit 5	Bit 4	Bit 3	Bit 2	Bit 1	Bit 0	Reset Values on page
INTCON	GIE/GIEH	PEIE/GIEL	TMR0IE	INT0IE	RBIE	TMR0IF	INT0IF	RBIF	57
PIR1	PSPIF	ADIF	RC1IF	TX1IF	SSP1IF	CCP1IF	TMR2IF	TMR1IF	60
PIE1	PSPIE	ADIE	RC1IE	TX1IE	SSP1IE	CCP1IE	TMR2IE	TMR1IE	60
IPR1	PSPIP	ADIP	RC1IP	TX1IP	SSP1IP	CCP1IP	TMR2IP	TMR1IP	60
TRISC	TRISC7	TRISC6	TRISC5	TRISC4	TRISC3	TRISC2	TRISC1	TRISC0	60
TRISG	—	—	—	TRISG4	TRISG3	TRISG2	TRISG1	TRISG0	60
RCSTAx	SPEN	RX9	SREN	CREN	ADDEN	FERR	OERR	RX9D	59
TXREGx	EUSARTx Transmit Register								59
TXSTAx	CSRC	TX9	TXEN	SYNC	SENDB	BRGH	TRMT	TX9D	59
BAUDCONx	ABDOVF	RCIDL	—	SCKP	BRG16	—	WUE	ABDEN	61
SPBRGHx	EUSARTx Baud Rate Generator Register High Byte								61
SPBRGx	EUSARTx Baud Rate Generator Register Low Byte								59

Legend: — = unimplemented, read as '0'. Shaded cells are not used for synchronous slave transmission.

© 2008 Microchip Technology Inc.

20.4.2 EUSART SYNCHRONOUS SLAVE RECEPTION

The operation of the Synchronous Master and Slave modes is identical, except in the case of Sleep, or any Idle mode and bit SREN, which is a “don’t care” in Slave mode.

If receive is enabled by setting the CREN bit prior to entering Sleep or any Idle mode, then a word may be received while in this low-power mode. Once the word is received, the RSRx register will transfer the data to the RCREGx register; if the RCxIE enable bit is set, the interrupt generated will wake the chip from the low-power mode. If the global interrupt is enabled, the program will branch to the interrupt vector.

To set up a Synchronous Slave Reception:

1. Enable the synchronous master serial port by setting bits, SYNC and SPEN, and clearing bit, CSRC.
2. If interrupts are desired, set enable bit, RCxIE.
3. If 9-bit reception is desired, set bit, RX9.
4. To enable reception, set enable bit, CREN.
5. Flag bit, RCxIF, will be set when reception is complete. An interrupt will be generated if enable bit, RCxIE, was set.
6. Read the RCSTAx register to get the 9th bit (if enabled) and determine if any error occurred during reception.
7. Read the 8-bit received data by reading the RCREGx register.
8. If any error occurred, clear the error by clearing bit, CREN.
9. If using interrupts, ensure that the GIE and PEIE bits in the INTCON register (INTCON<7:6>) are set.

TABLE 20-10: REGISTERS ASSOCIATED WITH SYNCHRONOUS SLAVE RECEPTION

Name	Bit 7	Bit 6	Bit 5	Bit 4	Bit 3	Bit 2	Bit 1	Bit 0	Reset Values on page
INTCON	GIE/GIEH	PEIE/GIEL	TMR0IE	INT0IE	RBIE	TMR0IF	INT0IF	RBIF	57
PIR1	PSPIF	ADIF	RC1IF	TX1IF	SSP1IF	CCP1IF	TMR2IF	TMR1IF	60
PIE1	PSPIE	ADIE	RC1IE	TX1IE	SSP1IE	CCP1IE	TMR2IE	TMR1IE	60
IPR1	PSPIP	ADIP	RC1IP	TX1IP	SSP1IP	CCP1IP	TMR2IP	TMR1IP	60
TRISC	TRISC7	TRISC6	TRISC5	TRISC4	TRISC3	TRISC2	TRISC1	TRISC0	60
TRISG	—	—	—	TRISG4	TRISG3	TRISG2	TRISG1	TRISG0	60
RCSTAx	SPEN	RX9	SREN	CREN	ADDEN	FERR	OERR	RX9D	59
RCREGx	EUSARTx Receive Register								59
TXSTAx	CSRC	TX9	TXEN	SYNC	SENDB	BRGH	TRMT	TX9D	59
BAUDCONx	ABDOVF	RCIDL	—	SCKP	BRG16	—	WUE	ABDEN	61
SPBRGHx	EUSARTx Baud Rate Generator Register High Byte								61
SPBRGx	EUSARTx Baud Rate Generator Register Low Byte								59

Legend: — = unimplemented, read as ‘0’. Shaded cells are not used for synchronous slave reception.

NOTES:

© 2008 Microchip Technology Inc.

21.0 10-BIT ANALOG-TO-DIGITAL CONVERTER (A/D) MODULE

The Analog-to-Digital (A/D) converter module has 12 inputs for the 64-pin devices and 16 for the 80-pin devices. This module allows conversion of an analog input signal to a corresponding 10-bit digital number.

The module has five registers:

- A/D Result High Register (ADRESH)
- A/D Result Low Register (ADRESL)
- A/D Control Register 0 (ADCON0)
- A/D Control Register 1 (ADCON1)
- A/D Control Register 2 (ADCON2)

The ADCON0 register, shown in Register 21-1, controls the operation of the A/D module. The ADCON1 register, shown in Register 21-2, configures the functions of the port pins. The ADCON2 register, shown in Register 21-3, configures the A/D clock source, programmed acquisition time and justification.

REGISTER 21-1: ADCON0: A/D CONTROL REGISTER

U-0	U-0	R/W-0	R/W-0	R/W-0	R/W-0	R/W-0	R/W-0
—	—	CHS3(1)	CHS2(1)	CHS1(1)	CHS0(1)	GO/$\overline{\text{DONE}}$	ADON
bit 7							bit 0

Legend:			
R = Readable bit	W = Writable bit	U = Unimplemented bit, read as ‘0’	
-n = Value at POR	‘1’ = Bit is set	‘0’ = Bit is cleared	x = Bit is unknown

bit 7-6 **Unimplemented:** Read as ‘0’

bit 5-2 **CHS<3:0>** Analog Channel Select bits(1)
0000 = Channel 0 (AN0)
0001 = Channel 1 (AN1)
0010 = Channel 2 (AN2)
0011 = Channel 3 (AN3)
0100 = Channel 4 (AN4)
0101 = Channel 5 (AN5)
0110 = Channel 6 (AN6)
0111 = Channel 7 (AN7)
1000 = Channel 8 (AN8)
1001 = Channel 9 (AN9)
1010 = Channel 10 (AN10)
1011 = Channel 11 (AN11)
1100 = Channel 12 (AN12)(1)
1101 = Channel 13 (AN13)(1)
1110 = Channel 14 (AN14)(1)
1111 = Channel 15 (AN15)(1)

bit 1 **GO/$\overline{\text{DONE}}$:** A/D Conversion Status bit
When ADON = 1:
1 = A/D conversion in progress
0 = A/D Idle

bit 0 **ADON:** A/D On bit
1 = A/D converter module is enabled
0 = A/D converter module is disabled

Note 1: These channels are not implemented on 64-pin devices.

REGISTER 21-2: ADCON1: A/D CONTROL REGISTER 1

U-0	U-0	R/W-0	R/W-0	R/W-0	R/W-0	R/W-0	R/W-0
—	—	VCFG1	VCFG0	PCFG3	PCFG2	PCFG1	PCFG0
bit 7							bit 0

Legend:			
R = Readable bit	W = Writable bit	U = Unimplemented bit, read as ‘0’	
-n = Value at POR	‘1’ = Bit is set	‘0’ = Bit is cleared	x = Bit is unknown

bit 7-6 **Unimplemented:** Read as ‘0’

bit 5-4 **VCFG<1:0>:** Voltage Reference Configuration bits

	A/D VREF+	A/D VREF-
00	AVDD	AVSS
01	External VREF+	AVSS
10	AVDD	External VREF-
11	External VREF+	External VREF-

bit 3-0 **PCFG<3:0>:** A/D Port Configuration Control bits:

PCFG<3:0>	AN15(1)	AN14(1)	AN13(1)	AN12(1)	AN11	AN10	AN9	AN8	AN7	AN6	AN5	AN4	AN3	AN2	AN1	AN0
0000	A	A	A	A	A	A	A	A	A	A	A	A	A	A	A	A
0001	D	D	A	A	A	A	A	A	A	A	A	A	A	A	A	A
0010	D	D	D	A	A	A	A	A	A	A	A	A	A	A	A	A
0011	D	D	D	D	A	A	A	A	A	A	A	A	A	A	A	A
0100	D	D	D	D	D	A	A	A	A	A	A	A	A	A	A	A
0101	D	D	D	D	D	D	A	A	A	A	A	A	A	A	A	A
0110	D	D	D	D	D	D	D	A	A	A	A	A	A	A	A	A
0111	D	D	D	D	D	D	D	D	A	A	A	A	A	A	A	A
1000	D	D	D	D	D	D	D	D	D	A	A	A	A	A	A	A
1001	D	D	D	D	D	D	D	D	D	D	A	A	A	A	A	A
1010	D	D	D	D	D	D	D	D	D	D	D	A	A	A	A	A
1011	D	D	D	D	D	D	D	D	D	D	D	D	A	A	A	A
1100	D	D	D	D	D	D	D	D	D	D	D	D	D	A	A	A
1101	D	D	D	D	D	D	D	D	D	D	D	D	D	D	A	A
1110	D	D	D	D	D	D	D	D	D	D	D	D	D	D	D	A
1111	D	D	D	D	D	D	D	D	D	D	D	D	D	D	D	D

A = Analog input D = Digital I/O

Note 1: AN15 through AN12 are available only on 80-pin devices.

© 2008 Microchip Technology Inc.

REGISTER 21-3: ADCON2: A/D CONTROL REGISTER 2

R/W-0	U-0	R/W-0	R/W-0	R/W-0	R/W-0	R/W-0	R/W-0
ADFM	—	ACQT2	ACQT1	ACQT0	ADCS2	ADCS1	ADCS0
bit 7							bit 0

Legend:			
R = Readable bit	W = Writable bit	U = Unimplemented bit, read as ‘0’	
-n = Value at POR	‘1’ = Bit is set	‘0’ = Bit is cleared	x = Bit is unknown

bit 7 **ADFM:** A/D Result Format Select bit
1 = Right justified
0 = Left justified

bit 6 **Unimplemented:** Read as ‘0’

bit 5-3 **ACQT<2:0>:** A/D Acquisition Time Select bits
111 = 20 TAD
110 = 16 TAD
101 = 12 TAD
100 = 8 TAD
011 = 6 TAD
010 = 4 TAD
001 = 2 TAD
000 = 0 TAD(1)

bit 2-0 **ADCS<2:0>:** A/D Conversion Clock Select bits
111 = FRC (clock derived from A/D RC oscillator)(1)
110 = FOSC/64
101 = FOSC/16
100 = FOSC/4
011 = FRC (clock derived from A/D RC oscillator)(1)
010 = FOSC/32
001 = FOSC/8
000 = FOSC/2

Note 1: If the A/D FRC clock source is selected, a delay of one TCY (instruction cycle) is added before the A/D clock starts. This allows the SLEEP instruction to be executed before starting a conversion.

The analog reference voltage is software selectable to either the device's positive and negative supply voltage (V_{DD} and V_{SS}), or the voltage level on the RA3/AN3/V_{REF}+ and RA2/AN2/V_{REF}- pins.

The A/D converter has a unique feature of being able to operate while the device is in Sleep mode. To operate in Sleep, the A/D conversion clock must be derived from the A/D's internal RC oscillator.

The output of the sample and hold is the input into the converter, which generates the result via successive approximation.

A device Reset forces all registers to their Reset state. This forces the A/D module to be turned off and any conversion in progress is aborted.

Each port pin associated with the A/D converter can be configured as an analog input, or as a digital I/O. The ADRESH and ADRESL registers contain the result of the A/D conversion. When the A/D conversion is complete, the result is loaded into the ADRESH:ADRESL register pair, the GO/$\overline{\text{DONE}}$ bit (ADCON0 register) is cleared and A/D Interrupt Flag bit, ADIF (PIR1<6>), is set. The block diagram of the A/D module is shown in Figure 21-1.

FIGURE 21-1: A/D BLOCK DIAGRAM

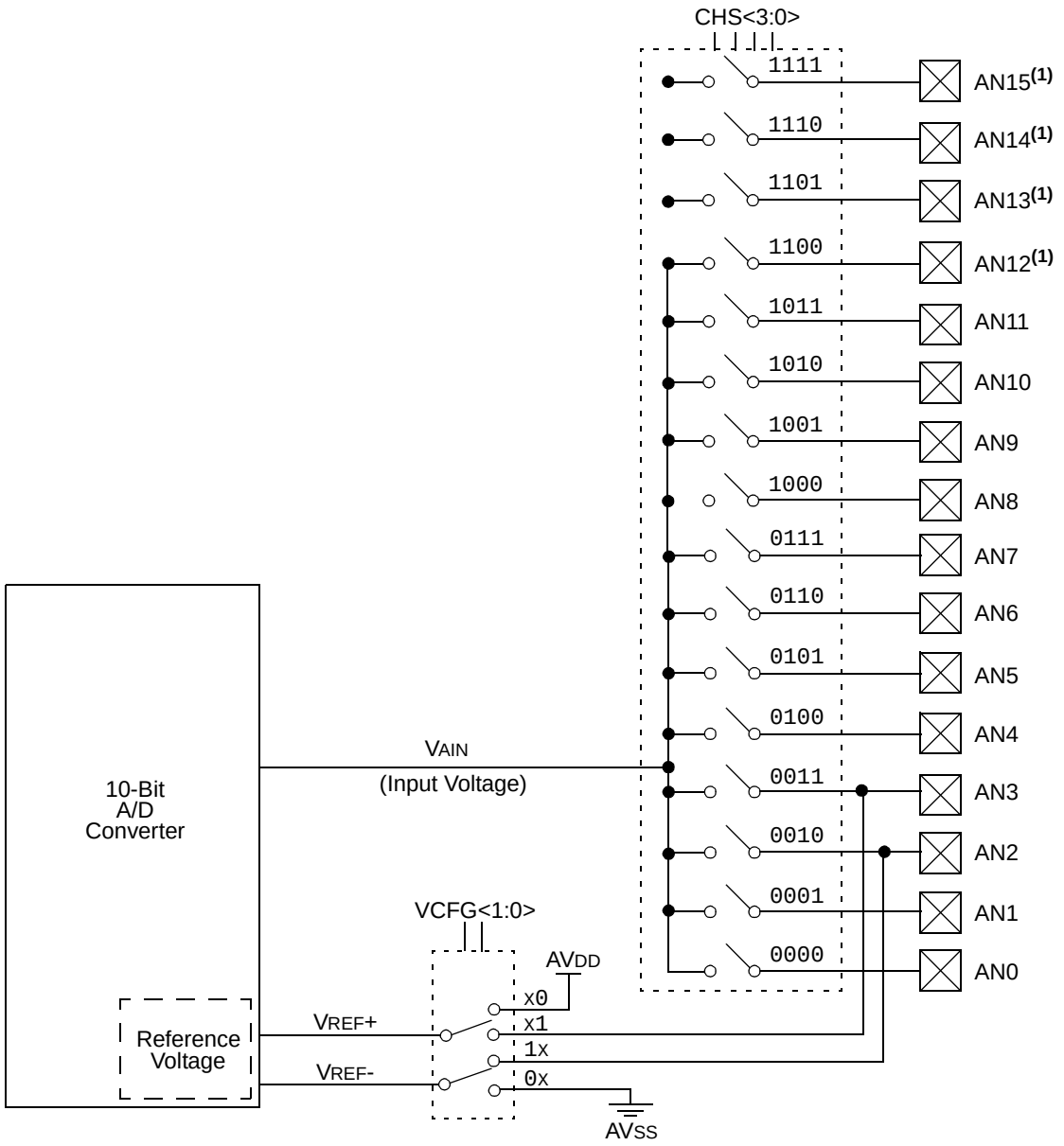

Note 1: Channels AN12 through AN15 are not available on 64-pin devices.
2: I/O pins have diode protection to V_{DD} and V_{SS}.

© 2008 Microchip Technology Inc.

The value in the ADRESH:ADRESL registers is not modified for a Power-on Reset. The ADRESH:ADRESL registers will contain unknown data after a Power-on Reset.

After the A/D module has been configured as desired, the selected channel must be acquired before the conversion is started. The analog input channels must have their corresponding TRIS bits selected as an input. To determine acquisition time, see **Section 21.1 "A/D Acquisition Requirements"**. After this acquisition time has elapsed, the A/D conversion can be started. An acquisition time can be programmed to occur between setting the GO/$\overline{\text{DONE}}$ bit and the actual start of the conversion.

The following steps should be followed to perform an A/D conversion:

1. Configure the A/D module:
   - Configure analog pins, voltage reference and digital I/O (ADCON1)
   - Select A/D input channel (ADCON0)
   - Select A/D acquisition time (ADCON2)
   - Select A/D conversion clock (ADCON2)
   - Turn on A/D module (ADCON0)
2. Configure A/D interrupt (if desired):
   - Clear ADIF bit
   - Set ADIE bit
   - Set GIE bit
3. Wait the required acquisition time (if required).
4. Start conversion:
   - Set GO/$\overline{\text{DONE}}$ bit (ADCON0 register)
5. Wait for A/D conversion to complete, by either:
   - Polling for the GO/$\overline{\text{DONE}}$ bit to be cleared

   OR
   - Waiting for the A/D interrupt
6. Read A/D Result registers (ADRESH:ADRESL); clear bit ADIF, if required.
7. For next conversion, go to step 1 or step 2, as required. The A/D conversion time per bit is defined as TAD. A minimum wait of 2 TAD is required before the next acquisition starts.

FIGURE 21-2: A/D TRANSFER FUNCTION

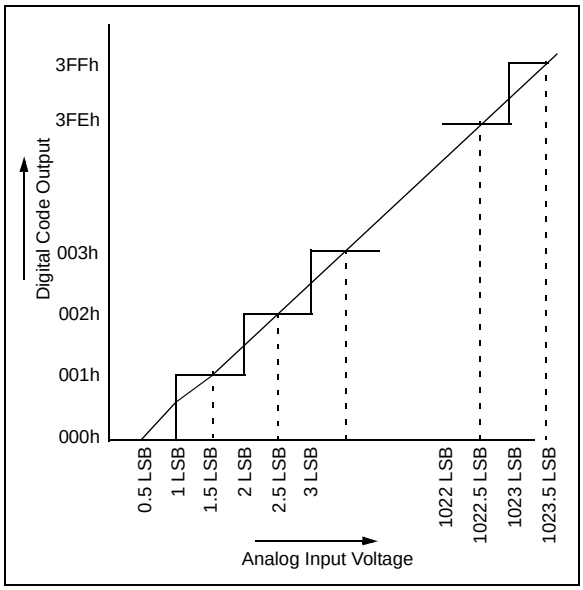

FIGURE 21-3: ANALOG INPUT MODEL

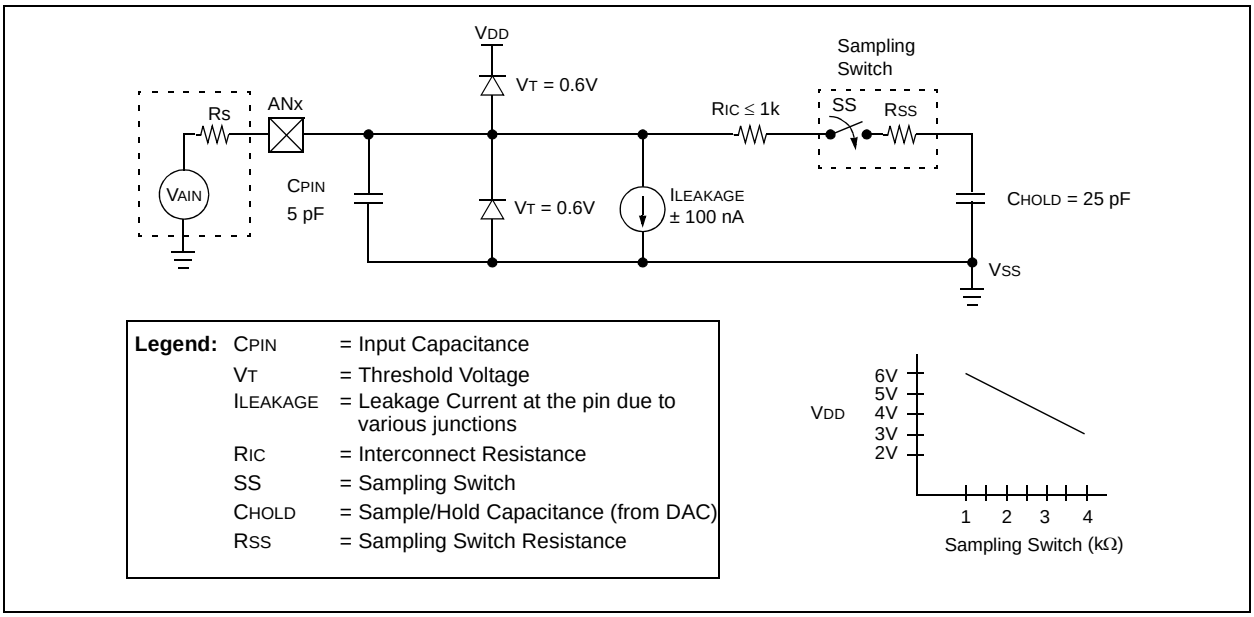

21.1 A/D Acquisition Requirements

For the A/D converter to meet its specified accuracy, the charge holding capacitor (C_{HOLD}) must be allowed to fully charge to the input channel voltage level. The analog input model is shown in Figure 21-3. The source impedance (R_S) and the internal sampling switch (R_{SS}) impedance directly affect the time required to charge the capacitor C_{HOLD}. The sampling switch (R_{SS}) impedance varies over the device voltage (V_{DD}). The source impedance affects the offset voltage at the analog input (due to pin leakage current). **The maximum recommended impedance for analog sources is 2.5 kΩ.** After the analog input channel is selected (changed), the channel must be sampled for at least the minimum acquisition time before starting a conversion.

Note:	When the conversion is started, the holding capacitor is disconnected from the input pin.

To calculate the minimum acquisition time, Equation 21-1 may be used. This equation assumes that 1/2 LSb error is used (1024 steps for the A/D). The 1/2 LSb error is the maximum error allowed for the A/D to meet its specified resolution.

Example 21-3 shows the calculation of the minimum required acquisition time T_{ACQ}. This calculation is based on the following application system assumptions:

C_{HOLD}	=	25 pF
Rs	=	2.5 kΩ
Conversion Error	≤	1/2 LSb
V_{DD}	=	5V → Rss = 2 kΩ
Temperature	=	85°C (system max.)

EQUATION 21-1: ACQUISITION TIME

$$T_{ACQ} = \text{Amplifier Settling Time} + \text{Holding Capacitor Charging Time} + \text{Temperature Coefficient}$$
$$= T_{AMP} + T_C + T_{COFF}$$

EQUATION 21-2: A/D MINIMUM CHARGING TIME

$$V_{HOLD} = (V_{REF} - (V_{REF}/2048)) \cdot (1 - e^{(-T_C/C_{HOLD}(R_{IC} + R_{SS} + R_S))})$$

or

$$T_C = -(C_{HOLD})(R_{IC} + R_{SS} + R_S)\ \ln(1/2048)$$

EQUATION 21-3: CALCULATING THE MINIMUM REQUIRED ACQUISITION TIME

$$T_{ACQ} = T_{AMP} + T_C + T_{COFF}$$

$$T_{AMP} = 0.2\ \mu s$$

$$T_{COFF} = (Temp - 25°C)(0.02\ \mu s/°C)$$
$$(85°C - 25°C)(0.02\ \mu s/°C)$$
$$1.2\ \mu s$$

Temperature coefficient is only required for temperatures > 25°C. Below 25°C, T_{COFF} = 0 ms.

$$T_C = -(C_{HOLD})(R_{IC} + R_{SS} + R_S)\ \ln(1/2047)\ \mu s$$
$$-(25\ pF)\ (1\ k\Omega + 2\ k\Omega + 2.5\ k\Omega)\ \ln(0.0004883)\ \mu s$$
$$1.05\ \mu s$$

$$T_{ACQ} = 0.2\ \mu s + 1\ \mu s + 1.2\ \mu s$$
$$2.4\ \mu s$$

© 2008 Microchip Technology Inc.

21.2 Selecting and Configuring Acquisition Time

The ADCON2 register allows the user to select an acquisition time that occurs each time the GO/DONE bit is set. It also gives users the option to use an automatically determined acquisition time.

Acquisition time may be set with the ACQT<2:0> bits (ADCON2<5:3>) which provides a range of 2 to 20 TAD. When the GO/DONE bit is set, the A/D module continues to sample the input for the selected acquisition time, then automatically begins a conversion. Since the acquisition time is programmed, there may be no need to wait for an acquisition time between selecting a channel and setting the GO/DONE bit.

Manual acquisition is selected when ACQT<2:0> = `000`. When the GO/DONE bit is set, sampling is stopped and a conversion begins. The user is responsible for ensuring the required acquisition time has passed between selecting the desired input channel and setting the GO/DONE bit. This option is also the default Reset state of the ACQT<2:0> bits and is compatible with devices that do not offer programmable acquisition times.

In either case, when the conversion is completed, the GO/DONE bit is cleared, the ADIF flag is set and the A/D begins sampling the currently selected channel again. If an acquisition time is programmed, there is nothing to indicate if the acquisition time has ended or if the conversion has begun.

21.3 Selecting the A/D Conversion Clock

The A/D conversion time per bit is defined as TAD. The A/D conversion requires 11 TAD per 10-bit conversion. The source of the A/D conversion clock is software selectable. There are seven possible options for TAD:

- 2 TOSC
- 4 TOSC
- 8 TOSC
- 16 TOSC
- 32 TOSC
- 64 TOSC
- Internal RC Oscillator

For correct A/D conversions, the A/D conversion clock (TAD) must be as short as possible, but greater than the minimum TAD (see parameter 130, Table 28-27 for more information).

Table 21-1 shows the resultant TAD times derived from the device operating frequencies and the A/D clock source selected.

TABLE 21-1: TAD vs. DEVICE OPERATING FREQUENCIES

AD Clock Source (TAD)		Maximum Device Frequency	
Operation	**ADCS<2:0>**	**PIC18FXXXX**	**PIC18LFXXXX(4)**
2 TOSC	000	2.86 MHz	1.43 kHz
4 TOSC	100	5.71 MHz	2.86 MHz
8 TOSC	001	11.43 MHz	5.72 MHz
16 TOSC	101	22.86 MHz	11.43 MHz
32 TOSC	010	40.0 MHz	22.86 MHz
64 TOSC	110	40.0 MHz	22.86 MHz
RC(3)	x11	1.00 MHz(1)	1.00 MHz(2)

Note 1: The RC source has a typical TAD time of 1.2 μs.

2: The RC source has a typical TAD time of 2.5 μs.

3: For device frequencies above 1 MHz, the device must be in Sleep for the entire conversion or the A/D accuracy may be out of specification.

4: Low-power (PIC18LFXXXX) devices only.

21.4 Operation in Power-Managed Modes

The selection of the automatic acquisition time and A/D conversion clock is determined in part by the clock source and frequency while in a power-managed mode.

If the A/D is expected to operate while the device is in a power-managed mode, the ACQT<2:0> and ADCS<2:0> bits in ADCON2 should be updated in accordance with the clock source to be used in that mode. After entering the mode, an A/D acquisition or conversion may be started. Once started, the device should continue to be clocked by the same clock source until the conversion has been completed.

If desired, the device may be placed into the corresponding Idle mode during the conversion. If the device clock frequency is less than 1 MHz, the A/D RC clock source should be selected.

Operation in the Sleep mode requires the A/D FRC clock to be selected. If bits ACQT<2:0> are set to '000' and a conversion is started, the conversion will be delayed one instruction cycle to allow execution of the SLEEP instruction and entry to Sleep mode. The IDLEN bit (OSCCON<7>) must have already been cleared prior to starting the conversion.

21.5 Configuring Analog Port Pins

The ADCON1, TRISA, TRISF and TRISH registers all configure the A/D port pins. The port pins needed as analog inputs must have their corresponding TRIS bits set (input). If the TRIS bit is cleared (output), the digital output level (V_{OH} or V_{OL}) will be converted.

The A/D operation is independent of the state of the CHS<3:0> bits and the TRIS bits.

Note 1: When reading the Port register, all pins configured as analog input channels will read as cleared (a low level). Pins configured as digital inputs will convert as analog inputs. Analog levels on a digitally configured input will be accurately converted.

2: Analog levels on any pin defined as a digital input may cause the digital input buffer to consume current out of the device's specification limits.

© 2008 Microchip Technology Inc.

21.6 A/D Conversions

Figure 21-4 shows the operation of the A/D converter after the GO/$\overline{\text{DONE}}$ bit has been set and the ACQT<2:0> bits are cleared. A conversion is started after the following instruction to allow entry into Sleep mode before the conversion begins.

Figure 21-5 shows the operation of the A/D converter after the GO/$\overline{\text{DONE}}$ bit has been set, the ACQT<2:0> bits are set to '010' and a 4 TAD acquisition time is selected before the conversion starts.

Clearing the GO/$\overline{\text{DONE}}$ bit during a conversion will abort the current conversion. The A/D Result register pair will NOT be updated with the partially completed A/D conversion sample. This means the ADRESH:ADRESL registers will continue to contain the value of the last completed conversion (or the last value written to the ADRESH:ADRESL registers).

After the A/D conversion is completed or aborted, a 2 TAD wait is required before the next acquisition can be started. After this wait, acquisition on the selected channel is automatically started.

Note:	The GO/$\overline{\text{DONE}}$ bit should **NOT** be set in the same instruction that turns on the A/D.

21.7 Discharge

The discharge phase is used to initialize the value of the capacitor array. The array is discharged before every sample. This feature helps to optimize the unity-gain amplifier, as the circuit always needs to charge the capacitor array, rather than charge/discharge based on previous measure values.

FIGURE 21-4: A/D CONVERSION TAD CYCLES (ACQT<2:0> = 000, TACQ = 0)

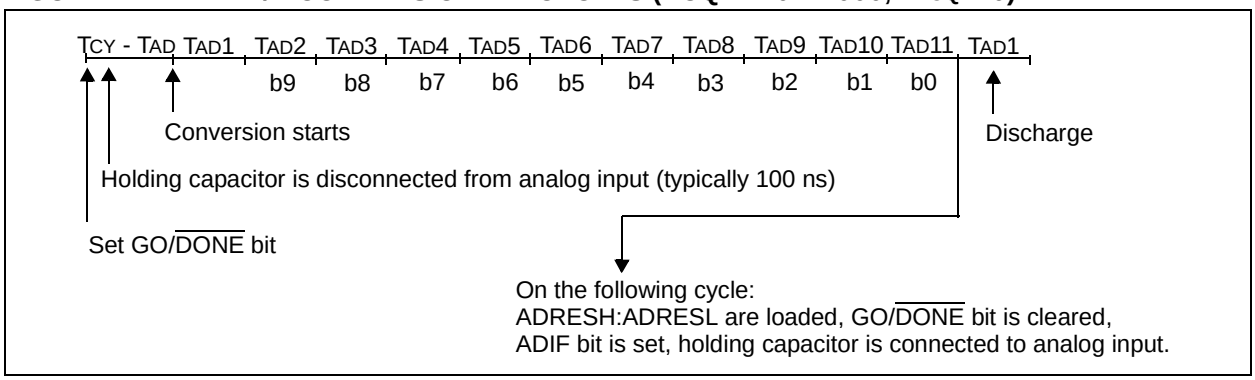

FIGURE 21-5: A/D CONVERSION TAD CYCLES (ACQT<2:0> = 010, TACQ = 4 TAD)

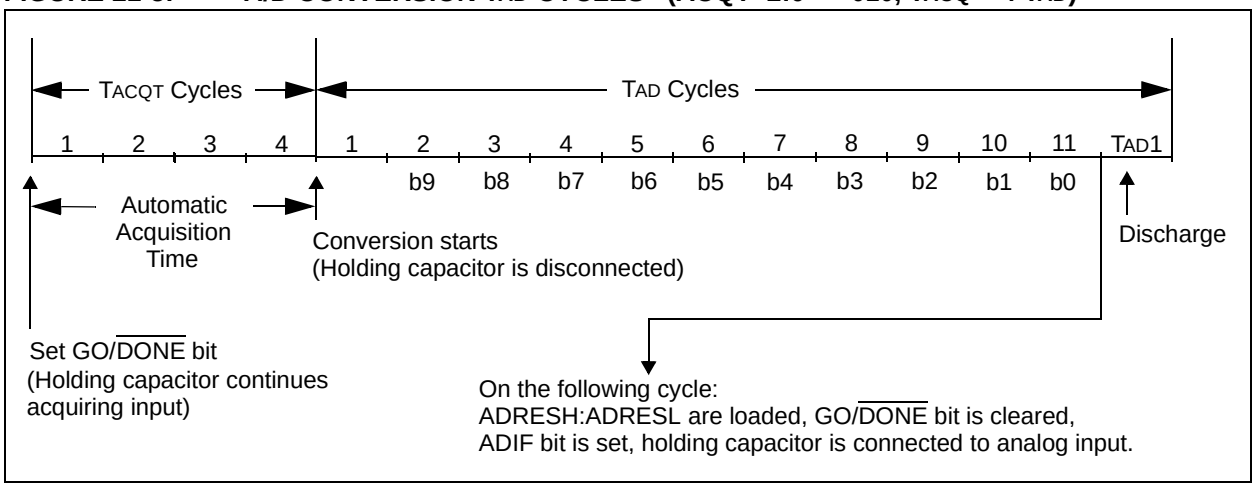

21.8 Use of the ECCP2 Trigger

An A/D conversion can be started by the Special Event Trigger of the ECCP2 module. This requires that the CCP2M<3:0> bits (CCP2CON<3:0>) be programmed as '1011' and that the A/D module is enabled (ADON bit is set). When the trigger occurs, the GO/$\overline{\text{DONE}}$ bit will be set, starting the A/D acquisition and conversion and the Timer1 (or Timer3) counter will be reset to zero. Timer1 (or Timer3) is reset to automatically repeat the A/D acquisition period with minimal software overhead (moving ADRESH:ADRESL to the desired location). The appropriate analog input channel must be selected and the minimum acquisition period is either timed by the user, or an appropriate TACQ time selected before the Special Event Trigger sets the GO/$\overline{\text{DONE}}$ bit (starts a conversion).

If the A/D module is not enabled (ADON is cleared), the Special Event Trigger will be ignored by the A/D module but will still reset the Timer1 (or Timer3) counter.

TABLE 21-2: REGISTERS ASSOCIATED WITH A/D OPERATION

Name	Bit 7	Bit 6	Bit 5	Bit 4	Bit 3	Bit 2	Bit 1	Bit 0	Reset Values on page
INTCON	GIE/GIEH	PEIE/GIEL	TMR0IE	INT0IE	RBIE	TMR0IF	INT0IF	RBIF	57
PIR1	PSPIF	ADIF	RC1IF	TX1IF	SSP1IF	CCP1IF	TMR2IF	TMR1IF	60
PIE1	PSPIE	ADIE	RC1IE	TX1IE	SSP1IE	CCP1IE	TMR2IE	TMR1IE	60
IPR1	PSPIP	ADIP	RC1IP	TX1IP	SSP1IP	CCP1IP	TMR2IP	TMR1IP	60
PIR2	OSCFIF	CMIF	—	EEIF	BCL1IF	HLVDIF	TMR3IF	CCP2IF	60
PIE2	OSCFIE	CMIE	—	EEIE	BCL1IE	HLVDIE	TMR3IE	CCP2IE	60
IPR2	OSCFIP	CMIP	—	EEIP	BCL1IP	HLVDIP	TMR3IP	CCP2IP	60
ADRESH	A/D Result Register High Byte								59
ADRESL	A/D Result Register Low Byte								59
ADCON0	—	—	CHS3	CHS2	CHS1	CHS0	GO/$\overline{\text{DONE}}$	ADON	59
ADCON1	—	—	VCFG1	VCFG0	PCFG3	PCFG2	PCFG1	PCFG0	59
ADCON2	ADFM	—	ACQT2	ACQT1	ACQT0	ADCS2	ADCS1	ADCS0	59
TRISA	TRISA7(1)	TRISA6(1)	TRISA5	TRISA4	TRISA3	TRISA2	TRISA1	TRISA0	60
TRISF	TRISF7	TRISF6	TRISF5	TRISF4	TRISF3	TRISF2	TRISF1	TRISF0	60
TRISH(2)	TRISH7	TRISH6	TRISH5	TRISH4	TRISH3	TRISH2	TRISH1	TRISH0	60

Legend: — = unimplemented, read as '0'. Shaded cells are not used for A/D conversion.

Note 1: PORTA<7:6> and their direction bits are individually configured as port pins based on various primary oscillator modes. When disabled, these bits read as '0'.

2: These registers are not implemented on 64-pin devices.

© 2008 Microchip Technology Inc.

22.0 COMPARATOR MODULE

The analog comparator module contains two comparators that can be configured in a variety of ways. The inputs can be selected from the analog inputs multiplexed with pins RF3 through RF6, as well as the on-chip voltage reference (see **Section 23.0 "Comparator Voltage Reference Module"**). The digital outputs (normal or inverted) are available on RF1 and RF2 and can also be read through the control register.

The CMCON register (Register 22-1) selects the comparator input and output configuration. Block diagrams of the various comparator configurations are shown in Figure 22-1.

REGISTER 22-1: CMCON: COMPARATOR MODULE CONTROL REGISTER

R-0	R-0	R/W-0	R/W-0	R/W-0	R/W-1	R/W-1	R/W-1
C2OUT	C1OUT	C2INV	C1INV	CIS	CM2	CM1	CM0
bit 7							bit 0

Legend:			
R = Readable bit	W = Writable bit	U = Unimplemented bit, read as '0'	
-n = Value at POR	'1' = Bit is set	'0' = Bit is cleared	x = Bit is unknown

bit 7 **C2OUT:** Comparator 2 Output bit
When C2INV = 0:
1 = C2 VIN+ > C2 VIN-
0 = C2 VIN+ < C2 VIN-
When C2INV = 1:
1 = C2 VIN+ < C2 VIN-
0 = C2 VIN+ > C2 VIN-

bit 6 **C1OUT:** Comparator 1 Output bit
When C1INV = 0:
1 = C1 VIN+ > C1 VIN-
0 = C1 VIN+ < C1 VIN-
When C1INV = 1:
1 = C1 VIN+ < C1 VIN-
0 = C1 VIN+ > C1 VIN-

bit 5 **C2INV:** Comparator 2 Output Inversion bit
1 = C2 output inverted
0 = C2 output not inverted

bit 4 **C1INV:** Comparator 1 Output Inversion bit
1 = C1 output inverted
0 = C1 output not inverted

bit 3 **CIS:** Comparator Input Switch bit
When CM2:CM0 = 110:
1 = C1 VIN- connects to RF5/AN10/CVREF
C2 VIN- connects to RF3/AN8
0 = C1 VIN- connects to RF6/AN11
C2 VIN- connects to RF4/AN9

bit 2-0 **CM<2:0>:** Comparator mode bits
Figure 22-1 shows the Comparator modes and the CM2:CM0 bit settings.

22.1 Comparator Configuration

There are eight modes of operation for the comparators, shown in Figure 22-1. Bits CM<2:0> of the CMCON register are used to select these modes. The TRISF register controls the data direction of the comparator pins for each mode. If the Comparator mode is changed, the comparator output level may not be valid for the specified mode change delay shown in **Section 28.0 "Electrical Characteristics"**.

Note:	Comparator interrupts should be disabled during a Comparator mode change; otherwise, a false interrupt may occur.

FIGURE 22-1: COMPARATOR I/O OPERATING MODES

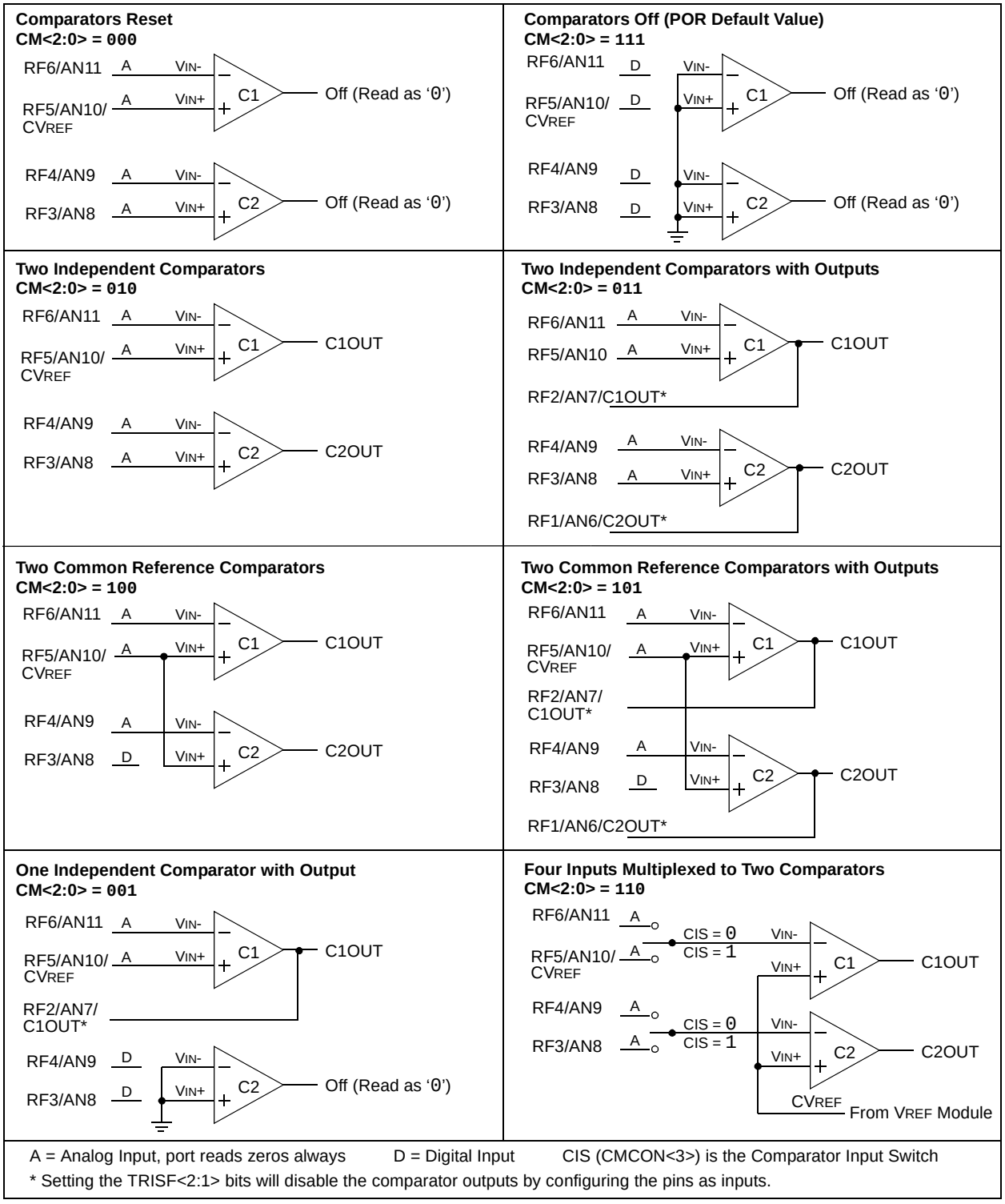

© 2008 Microchip Technology Inc.

22.2 Comparator Operation

A single comparator is shown in Figure 22-2, along with the relationship between the analog input levels and the digital output. When the analog input at VIN+ is less than the analog input VIN-, the output of the comparator is a digital low level. When the analog input at VIN+ is greater than the analog input VIN-, the output of the comparator is a digital high level. The shaded areas of the output of the comparator in Figure 22-2 represent the uncertainty, due to input offsets and response time.

22.3 Comparator Reference

Depending on the comparator operating mode, either an external or internal voltage reference may be used. The analog signal present at VIN- is compared to the signal at VIN+ and the digital output of the comparator is adjusted accordingly (Figure 22-2).

FIGURE 22-2: SINGLE COMPARATOR

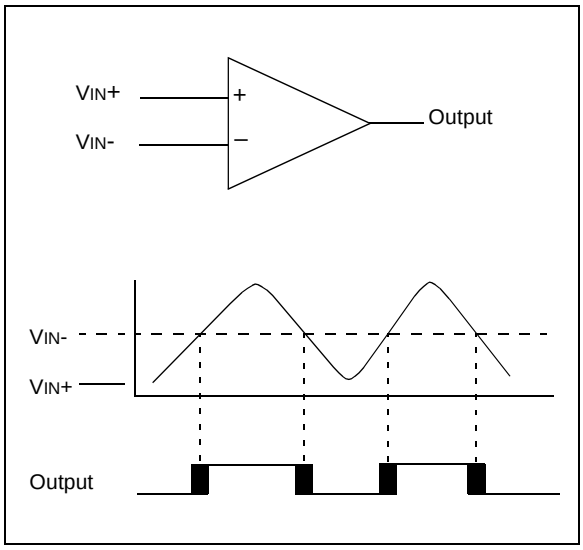

22.3.1 EXTERNAL REFERENCE SIGNAL

When external voltage references are used, the comparator module can be configured to have the comparators operate from the same or different reference sources. However, threshold detector applications may require the same reference. The reference signal must be between VSS and VDD and can be applied to either pin of the comparator(s).

22.3.2 INTERNAL REFERENCE SIGNAL

The comparator module also allows the selection of an internally generated voltage reference from the comparator voltage reference module. This module is described in more detail in **Section 23.0 “Comparator Voltage Reference Module”**.

The internal reference is only available in the mode where four inputs are multiplexed to two comparators (CM<2:0> = `110`). In this mode, the internal voltage reference is applied to the VIN+ pin of both comparators.

22.4 Comparator Response Time

Response time is the minimum time, after selecting a new reference voltage or input source, before the comparator output has a valid level. If the internal reference is changed, the maximum delay of the internal voltage reference must be considered when using the comparator outputs. Otherwise, the maximum delay of the comparators should be used (see **Section 28.0 “Electrical Characteristics”**).

22.5 Comparator Outputs

The comparator outputs are read through the CMCON register. These bits are read-only. The comparator outputs may also be directly output to the RF1 and RF2 I/O pins. When enabled, multiplexors in the output path of the RF1 and RF2 pins will switch and the output of each pin will be the unsynchronized output of the comparator. The uncertainty of each of the comparators is related to the input offset voltage and the response time given in the specifications. Figure 22-3 shows the comparator output block diagram.

The TRISF bits will still function as an output enable/disable for the RF1 and RF2 pins while in this mode.

The polarity of the comparator outputs can be changed using the C2INV and C1INV bits (CMCON<5:4>).

Note 1:	When reading the PORT register, all pins configured as analog inputs will read as a ‘`0`’. Pins configured as digital inputs will convert an analog input according to the Schmitt Trigger input specification.
2:	Analog levels on any pin defined as a digital input may cause the input buffer to consume more current than is specified.

FIGURE 22-3: COMPARATOR OUTPUT BLOCK DIAGRAM

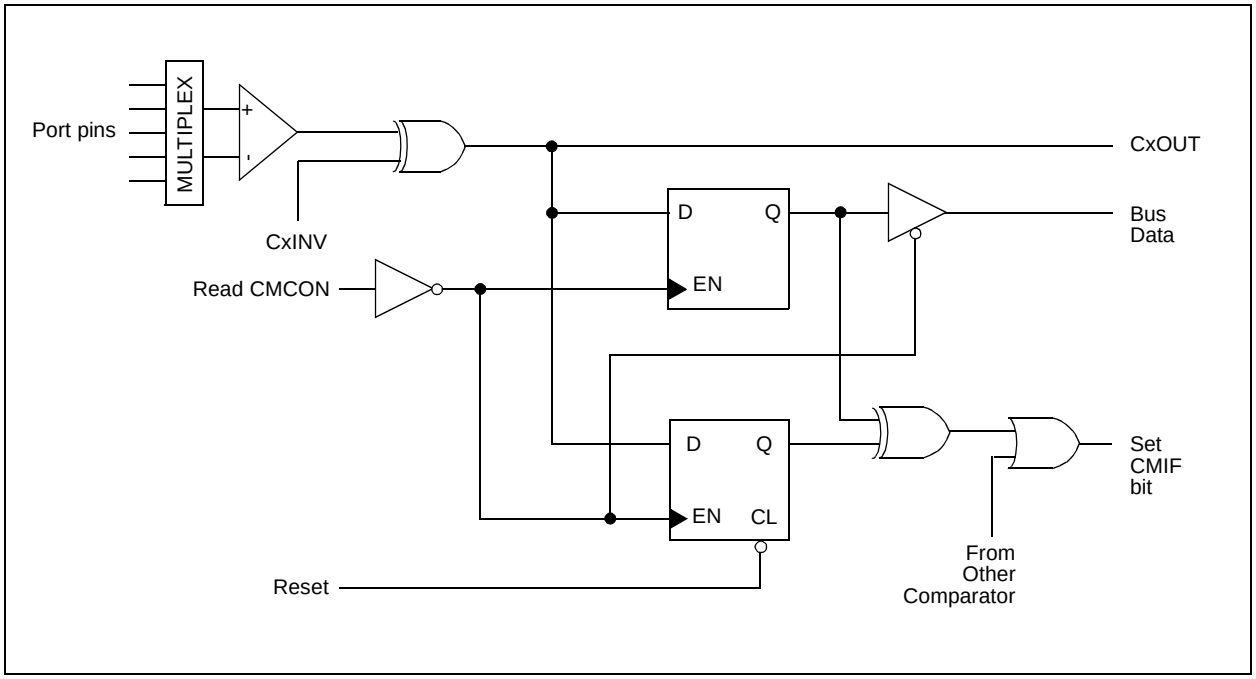

22.6 Comparator Interrupts

The comparator interrupt flag is set whenever there is a change in the output value of either comparator. Software will need to maintain information about the status of the output bits, as read from CMCON<7:6>, to determine the actual change that occurred. The CMIF bit (PIR2<6>) is the Comparator Interrupt Flag. The CMIF bit must be reset by clearing it. Since it is also possible to write a ‘1’ to this register, a simulated interrupt may be initiated.

Both the CMIE bit (PIE2<6>) and the PEIE bit (INTCON<6>) must be set to enable the interrupt. In addition, the GIE bit (INTCON<7>) must also be set. If any of these bits are clear, the interrupt is not enabled, though the CMIF bit will still be set if an interrupt condition occurs.

Note:	If a change in the CMCON register (C1OUT or C2OUT) should occur when a read operation is being executed (start of the Q2 cycle), then the CMIF (PIR2 register) interrupt flag may not get set.

The user, in the Interrupt Service Routine, can clear the interrupt in the following manner:

a) Any read or write of CMCON will end the mismatch condition.

b) Clear flag bit, CMIF.

A mismatch condition will continue to set flag bit, CMIF. Reading CMCON will end the mismatch condition and allow flag bit, CMIF, to be cleared.

22.7 Comparator Operation During Sleep

When a comparator is active and the device is placed in Sleep mode, the comparator remains active and the interrupt is functional if enabled. This interrupt will wake-up the device from Sleep mode, when enabled. Each operational comparator will consume additional current, as shown in the comparator specifications. To minimize power consumption while in Sleep mode, turn off the comparators (CM<2:0> = 111) before entering Sleep. If the device wakes up from Sleep, the contents of the CMCON register are not affected.

22.8 Effects of a Reset

A device Reset forces the CMCON register to its Reset state, causing the comparator modules to be turned off (CM<2:0> = 111). However, the input pins (RF3 through RF6) are configured as analog inputs by default on device Reset. The I/O configuration for these pins is also determined by the setting of the PCFG<3:0> bits (ADCON1<3:0>). Therefore, device current is minimized when analog inputs are present at Reset time.

© 2008 Microchip Technology Inc.

22.9 Analog Input Connection Considerations

A simplified circuit for an analog input is shown in Figure 22-4. Since the analog pins are connected to a digital output, they have reverse biased diodes to VDD and VSS. The analog input, therefore, must be between VSS and VDD. If the input voltage deviates from this range by more than 0.6V in either direction, one of the diodes is forward biased and a latch-up condition may occur. A maximum source impedance of 10 kΩ is recommended for the analog sources. Any external component connected to an analog input pin, such as a capacitor or a Zener diode, should have very little leakage current.

FIGURE 22-4: COMPARATOR ANALOG INPUT MODEL

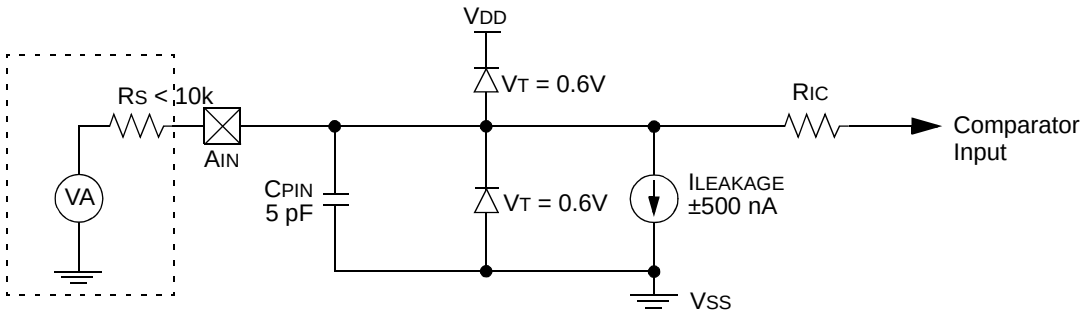

Legend:
CPIN = Input Capacitance
VT = Threshold Voltage
ILEAKAGE = Leakage Current at the pin due to various junctions
RIC = Interconnect Resistance
RS = Source Impedance
VA = Analog Voltage

TABLE 22-1: REGISTERS ASSOCIATED WITH COMPARATOR MODULE

Name	Bit 7	Bit 6	Bit 5	Bit 4	Bit 3	Bit 2	Bit 1	Bit 0	Reset Values on page
CMCON	C2OUT	C1OUT	C2INV	C1INV	CIS	CM2	CM1	CM0	59
CVRCON	CVREN	CVROE	CVRR	CVRSS	CVR3	CVR2	CVR1	CVR0	59
INTCON	GIE/GIEH	PEIE/GIEL	TMR0IE	INT0IE	RBIE	TMR0IF	INT0IF	RBIF	60
PIR2	OSCFIF	CMIF	—	EEIF	BCL1IF	HLVDIF	TMR3IF	CCP2IF	60
PIE2	OSCFIE	CMIE	—	EEIE	BCL1IE	HLVDIE	TMR3IE	CCP2IE	60
IPR2	OSCFIP	CMIP	—	EEIP	BCL1IP	HLVDIP	TMR3IP	CCP2IP	60
TRISF	TRISF7	TRISF6	TRISF5	TRISF4	TRISF3	TRISF2	TRISF1	TRISF0	60

Legend: — = unimplemented, read as '0'. Shaded cells are unused by the comparator module.

NOTES:

© 2008 Microchip Technology Inc.

23.0 COMPARATOR VOLTAGE REFERENCE MODULE

The comparator voltage reference is a 16-tap resistor ladder network that provides a selectable reference voltage. Although its primary purpose is to provide a reference for the analog comparators, it may also be used independently of them.

A block diagram of the module is shown in Figure 23-1. The resistor ladder is segmented to provide two ranges of CVREF values and has a power-down function to conserve power when the reference is not being used. The module's supply reference can be provided from either device VDD/VSS or an external voltage reference.

23.1 Configuring the Comparator Voltage Reference

The voltage reference module is controlled through the CVRCON register (Register 23-1). The comparator voltage reference provides two ranges of output voltage, each with 16 distinct levels. The range to be used is selected by the CVRR bit (CVRCON<5>). The primary difference between the ranges is the size of the steps selected by the CVREF Selection bits (CVR<3:0>), with one range offering finer resolution. The equations used to calculate the output of the comparator voltage reference are as follows:

If CVRR = 1:
CVREF = ((CVR3:CVR0)/24) x (CVRSRC)

If CVRR = 0:
CVREF = (CVRSRC/4) + ((CVR3:CVR0)/32) x (CVRSRC)

The comparator reference supply voltage can come from either VDD and VSS, or the external VREF+ and VREF- that are multiplexed with RA2 and RA3. The voltage source is selected by the CVRSS bit (CVRCON<4>).

The settling time of the comparator voltage reference must be considered when changing the CVREF output (see Table 28-3 in **Section 28.0 "Electrical Characteristics"**).

REGISTER 23-1: CVRCON: COMPARATOR VOLTAGE REFERENCE CONTROL REGISTER

R/W-0	R/W-0	R/W-0	R/W-0	R/W-0	R/W-0	R/W-0	R/W-0
CVREN	CVROE(1)	CVRR	CVRSS	CVR3	CVR2	CVR1	CVR0
bit 7							bit 0

Legend:			
R = Readable bit	W = Writable bit	U = Unimplemented bit, read as '0'	
-n = Value at POR	'1' = Bit is set	'0' = Bit is cleared	x = Bit is unknown

bit 7 **CVREN**: Comparator Voltage Reference Enable bit
1 = CVREF circuit powered on
0 = CVREF circuit powered down

bit 6 **CVROE**: Comparator VREF Output Enable bit(1)
1 = CVREF voltage level is also output on the RF5/AN10/CVREF pin
0 = CVREF voltage is disconnected from the RF5/AN10/CVREF pin

bit 5 **CVRR**: Comparator VREF Range Selection bit
1 = 0 to 0.667 CVRSRC, with CVRSRC/24 step size (low range)
0 = 0.25 CVRSRC to 0.75 CVRSRC, with CVRSRC/32 step size (high range)

bit 4 **CVRSS**: Comparator VREF Source Selection bit
1 = Comparator reference source, CVRSRC = (VREF+) – (VREF-)
0 = Comparator reference source, CVRSRC = AVDD – AVSS

bit 3-0 **CVR<3:0>:** Comparator VREF Value Selection bits (0 ≤ (CVR<3:0>) ≤ 15)
When CVRR = 1:
CVREF = ((CVR<3:0>)/24) x (CVRSRC)
When CVRR = 0:
CVREF = (CVRSRC/4) + ((CVR<3:0>)/32) x (CVRSRC)

Note 1: CVROE overrides the TRISF<5> bit setting.

FIGURE 23-1: COMPARATOR VOLTAGE REFERENCE BLOCK DIAGRAM

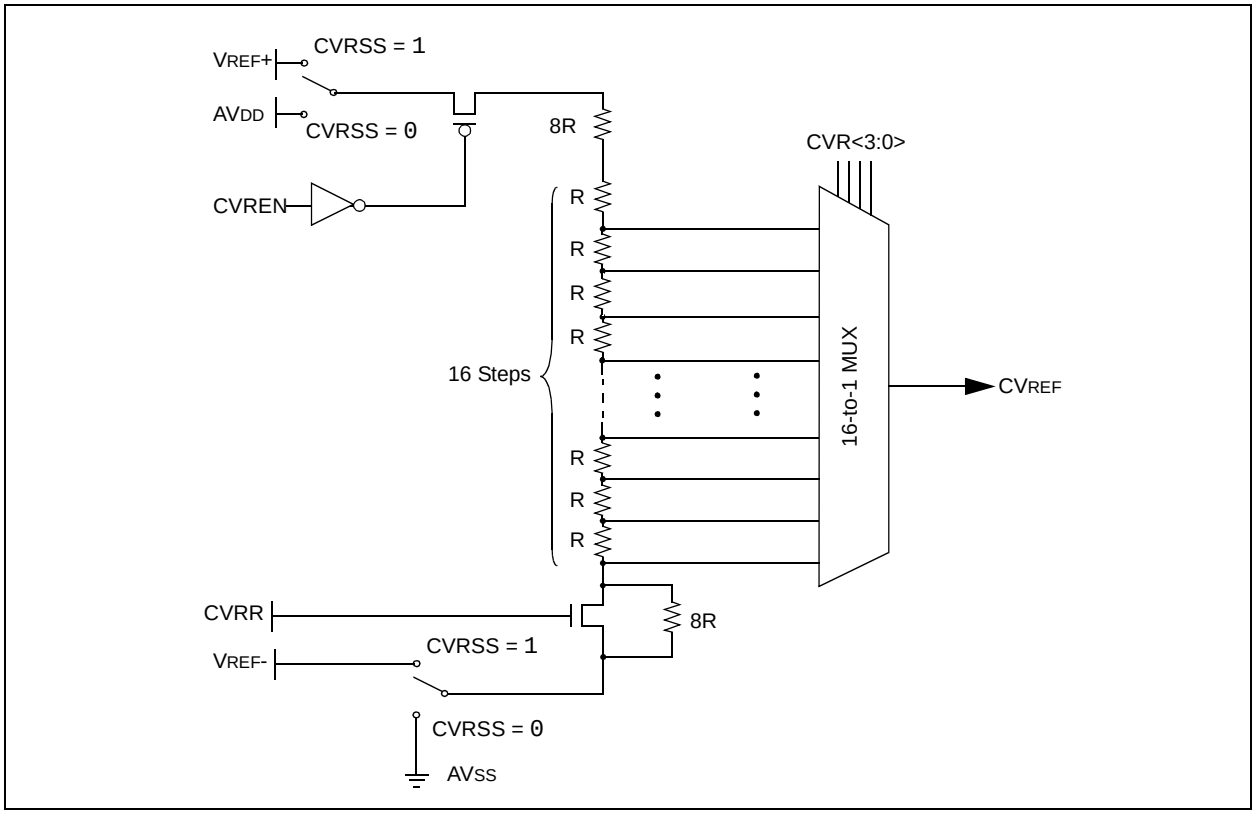

23.2 Voltage Reference Accuracy/Error

The full range of voltage reference cannot be realized due to the construction of the module. The transistors on the top and bottom of the resistor ladder network (Figure 23-1) keep CVREF from approaching the reference source rails. The voltage reference is derived from the reference source; therefore, the CVREF output changes with fluctuations in that source. The tested absolute accuracy of the voltage reference can be found in **Section 28.0 "Electrical Characteristics"**.

23.3 Operation During Sleep

When the device wakes up from Sleep through an interrupt or a Watchdog Timer time-out, the contents of the CVRCON register are not affected. To minimize current consumption in Sleep mode, the voltage reference should be disabled.

23.4 Effects of a Reset

A device Reset disables the voltage reference by clearing bit, CVREN (CVRCON<7>). This Reset also disconnects the reference from the RF5 pin by clearing bit, CVROE (CVRCON<6>), and selects the high-voltage range by clearing bit, CVRR (CVRCON<5>). The CVR value select bits are also cleared.

23.5 Connection Considerations

The voltage reference module operates independently of the comparator module. The output of the reference generator may be connected to the RF5 pin if the CVROE bit is set. Enabling the voltage reference output onto RF5 when it is configured as a digital input will increase current consumption. Connecting RF5 as a digital output with CVRSS enabled will also increase current consumption.

The RF5 pin can be used as a simple D/A output with limited drive capability. Due to the limited current drive capability, a buffer must be used on the voltage reference output for external connections to VREF. Figure 23-2 shows an example buffering technique.

© 2008 Microchip Technology Inc.

FIGURE 23-2: COMPARATOR VOLTAGE REFERENCE OUTPUT BUFFER EXAMPLE

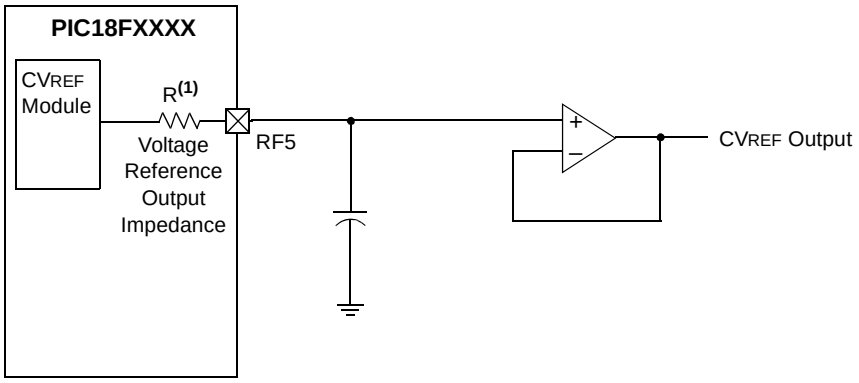

Note 1: R is dependent upon the voltage reference Configuration bits, CVRCON<3:0> and CVRCON<5>.

TABLE 23-1: REGISTERS ASSOCIATED WITH COMPARATOR VOLTAGE REFERENCE

Name	Bit 7	Bit 6	Bit 5	Bit 4	Bit 3	Bit 2	Bit 1	Bit 0	Reset Values on page
CVRCON	CVREN	CVROE	CVRR	CVRSS	CVR3	CVR2	CVR1	CVR0	59
CMCON	C2OUT	C1OUT	C2INV	C1INV	CIS	CM2	CM1	CM0	59
TRISF	TRISF7	TRISF6	TRISF5	TRISF4	TRISF3	TRISF2	TRISF1	TRISF0	60

Legend: Shaded cells are not used with the comparator voltage reference.

NOTES:

© 2008 Microchip Technology Inc.

24.0 HIGH/LOW-VOLTAGE DETECT (HLVD)

The PIC18F8722 family of devices have a High/Low-Voltage Detect module (HLVD). This is a programmable circuit that allows the user to specify both a device voltage trip point and the direction of change from that point. If the device experiences an excursion past the trip point in that direction, an interrupt flag is set. If the interrupt is enabled, the program execution will branch to the interrupt vector address and the software can then respond to the interrupt.

The High/Low-Voltage Detect Control register (Register 24-1) completely controls the operation of the HLVD module. This allows the circuitry to be “turned off” by the user under software control, which minimizes the current consumption for the device.

The block diagram for the HLVD module is shown in Figure 24-1.

REGISTER 24-1: HLVDCON: HIGH/LOW-VOLTAGE DETECT CONTROL REGISTER

R/W-0	U-0	R-0	R/W-0	R/W-0	R/W-1	R/W-0	R/W-1
VDIRMAG	—	IRVST	HLVDEN	HLVDL3(1)	HLVDL2(1)	HLVDL1(1)	HLVDL0(1)
bit 7							bit 0

Legend:			
R = Readable bit	W = Writable bit	U = Unimplemented bit, read as ‘0’	
-n = Value at POR	‘1’ = Bit is set	‘0’ = Bit is cleared	x = Bit is unknown

bit 7 **VDIRMAG:** Voltage Direction Magnitude Select bit
1 = Event occurs when voltage equals or exceeds trip point (HLVDL<3:0>)
0 = Event occurs when voltage equals or falls below trip point (HLVDL<3:0>)

bit 6 **Unimplemented:** Read as ‘0’

bit 5 **IRVST:** Internal Reference Voltage Stable Flag bit
1 = Indicates that the voltage detect logic will generate the interrupt flag at the specified voltage range
0 = Indicates that the voltage detect logic will not generate the interrupt flag at the specified voltage range and the HLVD interrupt should not be enabled

bit 4 **HLVDEN:** High/Low-Voltage Detect Power Enable bit
1 = HLVD enabled
0 = HLVD disabled

bit 3-0 **HLVDL<3:0>:** Voltage Detection Limit bits(1)
1111 = External analog input is used (input comes from the HLVDIN pin)
1110 = Maximum setting
.
.
.
0000 = Minimum setting

Note 1: See Table 28-4 for specifications.

The module is enabled by setting the HLVDEN bit. Each time that the HLVD module is enabled, the circuitry requires some time to stabilize. The IRVST bit is a read-only bit and is used to indicate when the circuit is stable. The module can only generate an interrupt after the circuit is stable and IRVST is set.

The VDIRMAG bit determines the overall operation of the module. When VDIRMAG is cleared, the module monitors for drops in VDD below a predetermined set point. When the bit is set, the module monitors for rises in VDD above the set point.

24.1 Operation

When the HLVD module is enabled, a comparator uses an internally generated reference voltage as the set point. The set point is compared with the trip point, where each node in the resistor divider represents a trip point voltage. The “trip point” voltage is the voltage level at which the device detects a high or low-voltage event, depending on the configuration of the module. When the supply voltage is equal to the trip point, the voltage tapped off of the resistor array is equal to the internal reference voltage generated by the voltage reference module. The comparator then generates an interrupt signal by setting the HLVDIF bit.

The trip point voltage is software programmable to any one of 16 values. The trip point is selected by programming the HLVDL<3:0> bits (HLVDCON<3:0>).

The HLVD module has an additional feature that allows the user to supply the trip voltage to the module from an external source. This mode is enabled when bits HLVDL<3:0> are set to ‘1111’. In this state, the comparator input is multiplexed from the external input pin, HLVDIN. This gives users flexibility because it allows them to configure the High/Low-Voltage Detect interrupt to occur at any voltage in the valid operating range.

FIGURE 24-1: HLVD MODULE BLOCK DIAGRAM (WITH EXTERNAL INPUT)

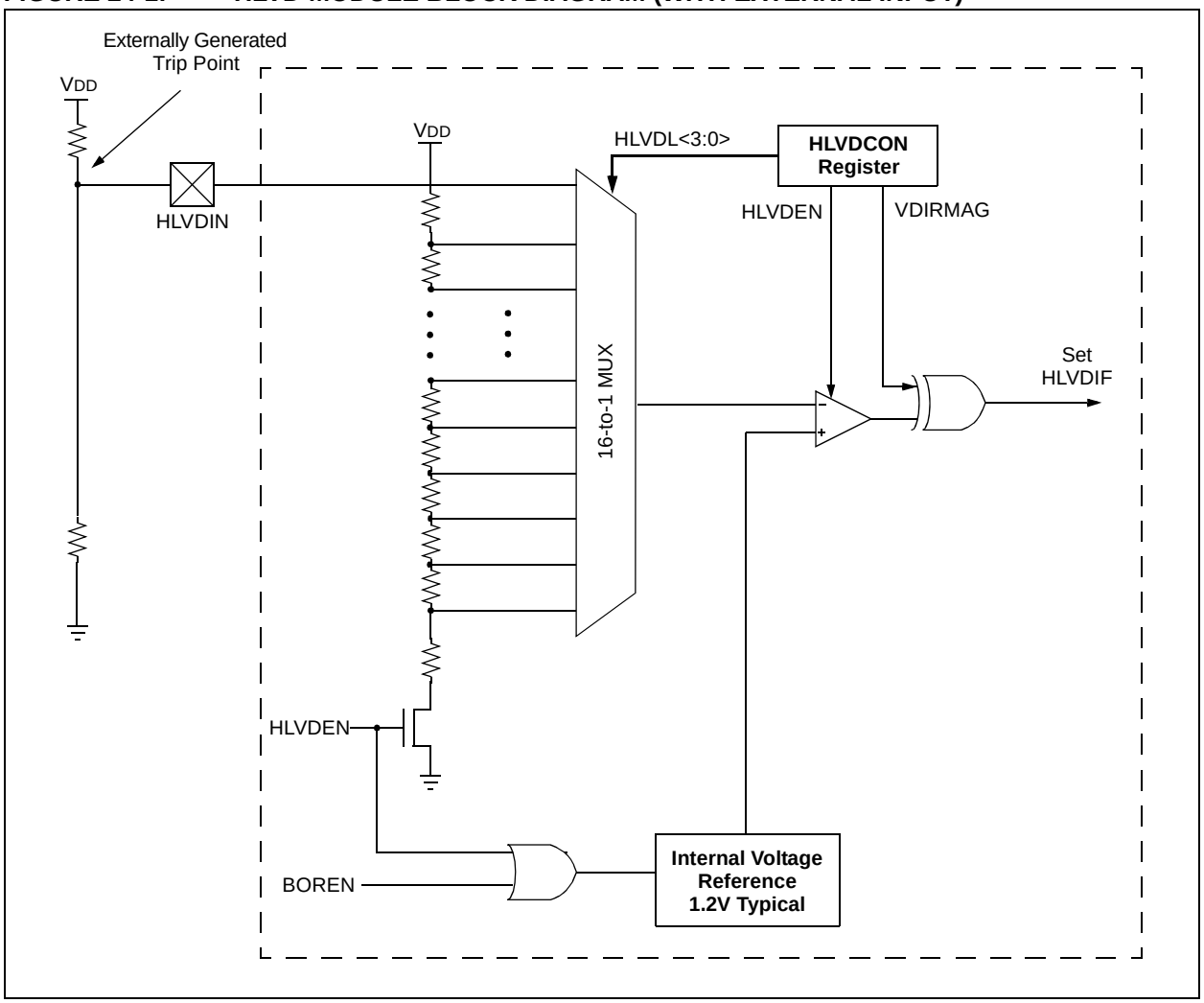

© 2008 Microchip Technology Inc.

24.2 HLVD Setup

The following steps are needed to set up the HLVD module:

1. Write the value to the HLVDL<3:0> bits that selects the desired HLVD trip point.
2. Set the VDIRMAG bit to detect high voltage (VDIRMAG = 1) or low voltage (VDIRMAG = 0).
3. Enable the HLVD module by setting the HLVDEN bit.
4. Clear the HLVD interrupt flag (PIR2<2>), which may have been set from a previous interrupt.
5. Enable the HLVD interrupt if interrupts are desired by setting the HLVDIE and GIE bits (PIE2<2> and INTCON<7>). An interrupt will not be generated until the IRVST bit is set.

24.3 Current Consumption

When the module is enabled, the HLVD comparator and voltage divider are enabled and will consume static current. The total current consumption, when enabled, is specified in electrical specification parameter D022B (**Section 28.2 "DC Characteristics"**).

Depending on the application, the HLVD module does not need to be operating constantly. To decrease the current requirements, the HLVD circuitry may only need to be enabled for short periods where the voltage is checked. After doing the check, the HLVD module may be disabled.

24.4 HLVD Start-up Time

The internal reference voltage of the HLVD module, specified in electrical specification parameter D420 (**Section 28.2 "DC Characteristics"**), may be used by other internal circuitry, such as the Programmable Brown-out Reset. If the HLVD or other circuits using the voltage reference are disabled to lower the device's current consumption, the reference voltage circuit will require time to become stable before a low or high-voltage condition can be reliably detected. This start-up time, T_{IRVST}, is an interval that is independent of device clock speed. It is specified in electrical specification parameter 36 (Table 28-12).

The HLVD interrupt flag is not enabled until T_{IRVST} has expired and a stable reference voltage is reached. For this reason, brief excursions beyond the set point may not be detected during this interval. Refer to Figure 24-2 or Figure 24-3.

FIGURE 24-2: LOW-VOLTAGE DETECT OPERATION (VDIRMAG = 0)

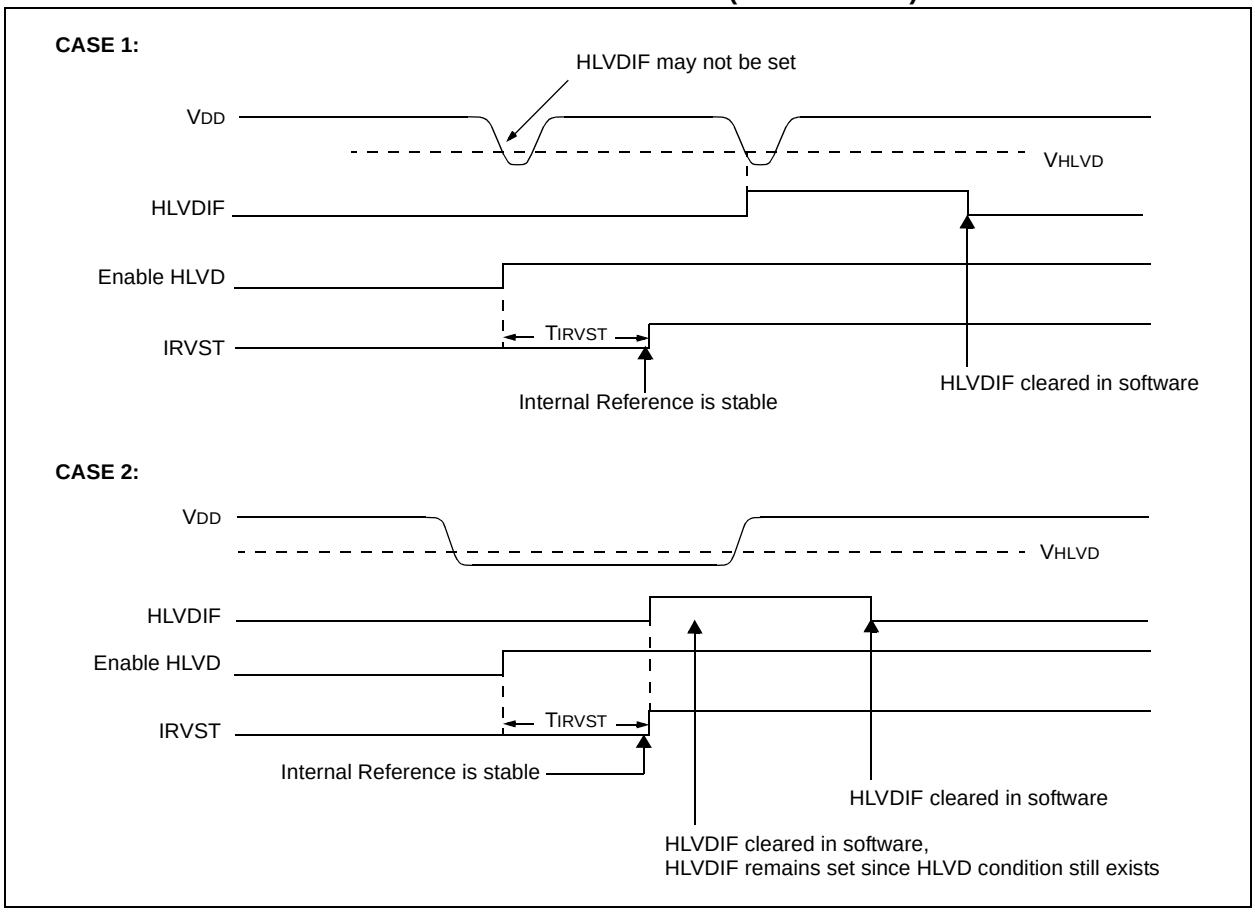

FIGURE 24-3: HIGH-VOLTAGE DETECT OPERATION (VDIRMAG = 1)

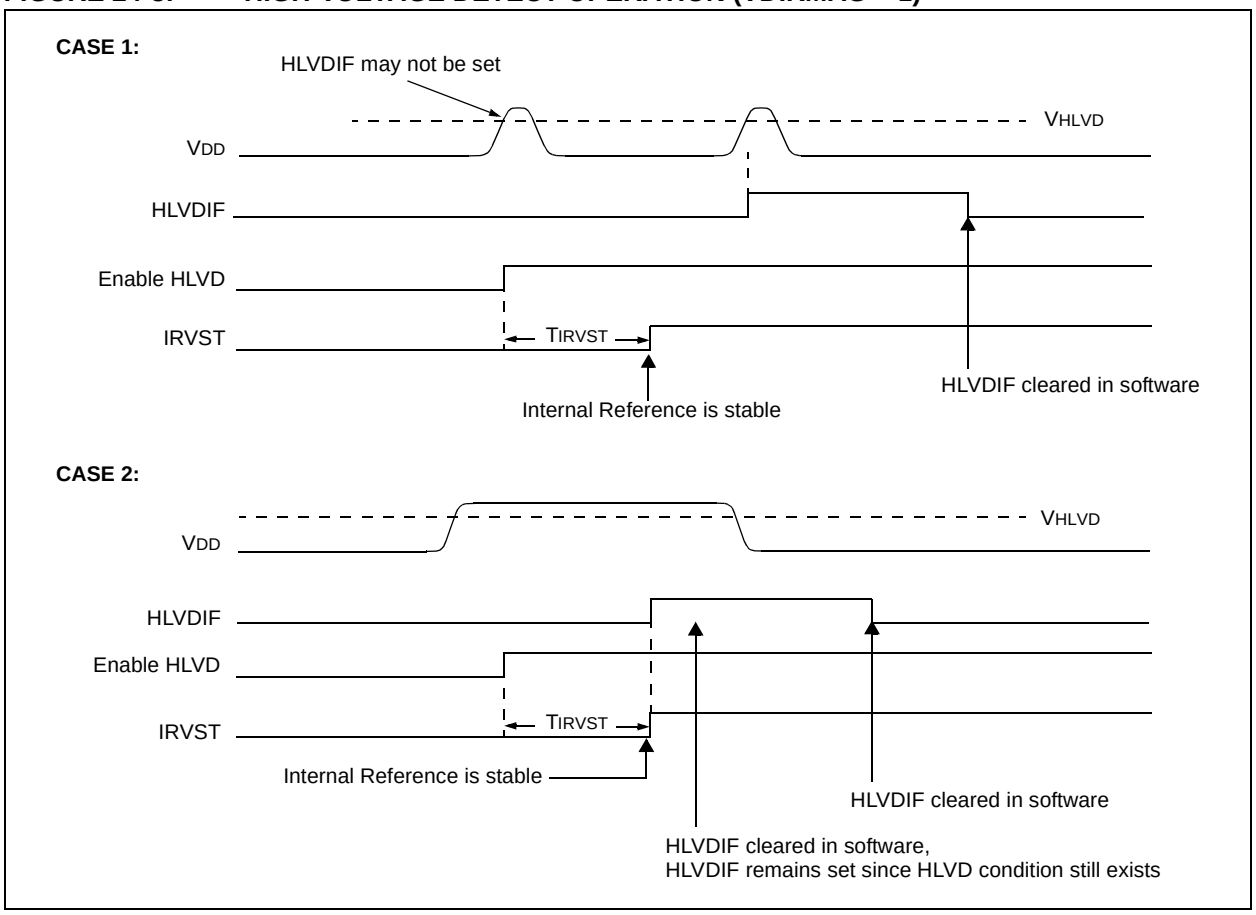

24.5 Applications

In many applications, the ability to detect a drop below or rise above a particular threshold is desirable. For example, the HLVD module could be periodically enabled to detect Universal Serial Bus (USB) attach or detach. This assumes the device is powered by a lower voltage source than the USB when detached. An attach would indicate a high-voltage detect from, for example, 3.3V to 5V (the voltage on USB) and vice versa for a detach. This feature could save a design a few extra components and an attach signal (input pin).

For general battery applications, Figure 24-4 shows a possible voltage curve. Over time, the device voltage decreases. When the device voltage reaches voltage V_A, the HLVD logic generates an interrupt at time T_A. The interrupt could cause the execution of an ISR, which would allow the application to perform “house-keeping tasks” and perform a controlled shutdown before the device voltage exits the valid operating range at T_B. The HLVD, thus, would give the application a time window, represented by the difference between T_A and T_B, to safely exit.

FIGURE 24-4: TYPICAL LOW-VOLTAGE DETECT APPLICATION

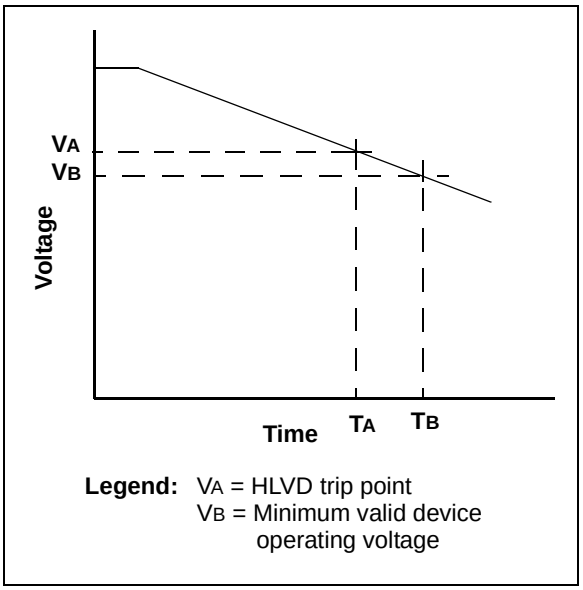

© 2008 Microchip Technology Inc.

24.6 Operation During Sleep

When enabled, the HLVD circuitry continues to operate during Sleep. If the device voltage crosses the trip point, the HLVDIF bit will be set and the device will wake-up from Sleep. Device execution will continue from the interrupt vector address if interrupts have been globally enabled.

24.7 Effects of a Reset

A device Reset forces all registers to their Reset state. This forces the HLVD module to be turned off.

TABLE 24-1: REGISTERS ASSOCIATED WITH HIGH/LOW-VOLTAGE DETECT MODULE

Name	Bit 7	Bit 6	Bit 5	Bit 4	Bit 3	Bit 2	Bit 1	Bit 0	Reset Values on page
HLVDCON	VDIRMAG	—	IRVST	HLVDEN	HLVDL3	HLVDL2	HLVDL1	HLVDL0	58
INTCON	GIE/GIEH	PEIE/GIEL	TMR0IE	INT0IE	RBIE	TMR0IF	INT0IF	RBIF	57
PIR2	OSCFIF	CMIF	—	EEIF	BCL1IF	HLVDIF	TMR3IF	CCP2IF	60
PIE2	OSCFIE	CMIE	—	EEIE	BCL1IE	HLVDIE	TMR3IE	CCP2IE	60
IPR2	OSCFIP	CMIP	—	EEIP	BCL1IP	HLVDIP	TMR3IP	CCP2IP	60
TRISA	TRISA7(1)	TRISA6(1)	TRISA5	TRISA4	TRISA3	TRISA2	TRISA1	TRISA0	60

Legend: — = unimplemented, read as '0'. Shaded cells are unused by the HLVD module.

Note 1: PORTA<7:6> and their direction bits are individually configured as port pins based on various primary oscillator modes. When disabled, these bits read as '0'.

NOTES:

© 2008 Microchip Technology Inc.

25.0 SPECIAL FEATURES OF THE CPU

The PIC18F8722 family of devices include several features intended to maximize reliability and minimize cost through elimination of external components. These are:

- Oscillator Selection
- Resets:
  - Power-on Reset (POR)
  - Power-up Timer (PWRT)
  - Oscillator Start-up Timer (OST)
  - Brown-out Reset (BOR)
- Interrupts
- Watchdog Timer (WDT)
- Fail-Safe Clock Monitor
- Two-Speed Start-up
- Code Protection
- ID Locations
- In-Circuit Serial Programming

The oscillator can be configured for the application depending on frequency, power, accuracy and cost. All of the options are discussed in detail in **Section 2.0 "Oscillator Configurations"**.

A complete discussion of device Resets and interrupts is available in previous sections of this data sheet.

In addition to their Power-up and Oscillator Start-up Timers provided for Resets, the PIC18F8722 family of devices has a Watchdog Timer, which is either permanently enabled via the Configuration bits or software controlled (if configured as disabled).

The inclusion of an internal RC oscillator also provides the additional benefits of a Fail-Safe Clock Monitor (FSCM) and Two-Speed Start-up. FSCM provides for background monitoring of the peripheral clock and automatic switchover in the event of its failure. Two-Speed Start-up enables code to be executed almost immediately on start-up, while the primary clock source completes its start-up delays.

All of these features are enabled and configured by setting the appropriate Configuration register bits.

25.1 Configuration Bits

The Configuration bits can be programmed (read as '0') or left unprogrammed (read as '1') to select various device Configurations. These bits are mapped starting at program memory location 300000h.

The user will note that address 300000h is beyond the user program memory space. In fact, it belongs to the configuration memory space (300000h-3FFFFFh), which can only be accessed using table reads and table writes.

Programming the Configuration registers is done in a manner similar to programming the Flash memory. The WR bit in the EECON1 register starts a self-timed write to the Configuration register. In normal operation mode, a TBLWT instruction with the TBLPTR pointing to the Configuration register sets up the address and the data for the Configuration register write. Setting the WR bit starts a long write to the Configuration register. The Configuration registers are written a byte at a time. To write or erase a configuration cell, a TBLWT instruction can write a '1' or a '0' into the cell. For additional details on Flash programming, refer to **Section 6.5 "Writing to Flash Program Memory"**.

TABLE 25-1: CONFIGURATION BITS AND DEVICE IDs

File Name		Bit 7	Bit 6	Bit 5	Bit 4	Bit 3	Bit 2	Bit 1	Bit 0	Default/ Unprogrammed Value
300001h	CONFIG1H	IESO	FCMEN	—	—	FOSC3	FOSC2	FOSC1	FOSC0	00-- 0111
300002h	CONFIG2L	—	—	—	BORV1	BORV0	BOREN1	BOREN0	$\overline{\text{PWRTEN}}$	---1 1111
300003h	CONFIG2H	—	—	—	WDTPS3	WDTPS2	WDTPS1	WDTPS0	WDTEN	---1 1111
300004h	CONFIG3L(5)	WAIT	BW	ABW1	ABW0	—	—	PM1	PM0	1111 --11
300005h	CONFIG3H	MCLRE	—	—	—	—	LPT1OSC	ECCPMX(5)	CCP2MX	1--- -011
300006h	CONFIG4L	$\overline{\text{DEBUG}}$	XINST	BBSIZ1	BBSIZ0	—	LVP	—	STVREN	1000 -1-1
300008h	CONFIG5L	CP7(1)	CP6(1)	CP5(2)	CP4(2)	CP3(3)	CP2	CP1	CP0	1111 1111
300009h	CONFIG5H	CPD	CPB	—	—	—	—	—	—	11-- ----
30000Ah	CONFIG6L	WRT7(1)	WRT6(1)	WRT5(2)	WRT4(2)	WRT3(3)	WRT2	WRT1	WRT0	1111 1111
30000Bh	CONFIG6H	WRTD	WRTB	WRTC	—	—	—	—	—	111- ----
30000Ch	CONFIG7L	EBRT7(1)	EBRT6(1)	EBTR5(2)	EBTR4(2)	EBTR3(3)	EBTR2	EBTR1	EBTR0	1111 1111
30000Dh	CONFIG7H	—	EBTRB	—	—	—	—	—	—	-1-- ----
3FFFFEh	DEVID1(4)	DEV2	DEV1	DEV0	REV4	REV3	REV2	REV1	REV0	xxxx xxxx
3FFFFFh	DEVID2(4)	DEV10	DEV9	DEV8	DEV7	DEV6	DEV5	DEV4	DEV3	xxxx xxxx

Legend: x = unknown, u = unchanged, - = unimplemented, q = value depends on condition.
Shaded cells are unimplemented, read as '0'.

Note 1: Unimplemented in PIC18F6527/6622/6627/8527/8622/8627 devices.
2: Unimplemented in PIC18F6527/6622/8527/8622 devices.
3: Unimplemented in PIC18F6527/8527 devices.
4: See Register 25-13 for DEVID1 values. DEVID registers are read-only and cannot be programmed by the user.
5: Unimplemented in PIC18F6527/6622/6627/6722 devices.

© 2008 Microchip Technology Inc.

REGISTER 25-1: CONFIG1H: CONFIGURATION REGISTER 1 HIGH (BYTE ADDRESS 300001h)

R/P-0	R/P-0	U-0	U-0	R/P-0	R/P-1	R/P-1	R/P-1
IESO	FCMEN	—	—	FOSC3	FOSC2	FOSC1	FOSC0
bit 7							bit 0

Legend:			
R = Readable bit	W = Writable bit	U = Unimplemented bit, read as ‘0’	
-n = Value at POR	‘1’ = Bit is set	‘0’ = Bit is cleared	x = Bit is unknown

bit 7 **IESO:** Internal/External Oscillator Switchover bit
1 = Two-Speed Start-up enabled
0 = Two-Speed Start-up disabled

bit 6 **FCMEN:** Fail-Safe Clock Monitor Enable bit
1 = Fail-Safe Clock Monitor enabled
0 = Fail-Safe Clock Monitor disabled

bit 5-4 **Unimplemented:** Read as ‘0’

bit 3-0 **FOSC<3:0>:** Oscillator Selection bits
11xx = External RC oscillator, CLKO function on RA6
101x = External RC oscillator, CLKO function on RA6
1001 = Internal oscillator block, CLKO function on RA6, port function on RA7
1000 = Internal oscillator block, port function on RA6 and RA7
0111 = External RC oscillator, port function on RA6
0110 = HS oscillator, PLL enabled (Clock Frequency = 4 x FOSC1)
0101 = EC oscillator, port function on RA6
0100 = EC oscillator, CLKO function on RA6
0011 = External RC oscillator, CLKO function on RA6
0010 = HS oscillator
0001 = XT oscillator
0000 = LP oscillator

REGISTER 25-2: CONFIG2L: CONFIGURATION REGISTER 2 LOW (BYTE ADDRESS 300002h)

U-0	U-0	U-0	R/P-1	R/P-1	R/P-1	R/P-1	R/P-1
—	—	—	BORV1(1)	BORV0(1)	BOREN1(2)	BOREN0(2)	$\overline{\text{PWRTEN}}$(2)
bit 7							bit 0

Legend:			
R = Readable bit	W = Writable bit	U = Unimplemented bit, read as ‘0’	
-n = Value at POR	‘1’ = Bit is set	‘0’ = Bit is cleared	x = Bit is unknown

bit 7-5 **Unimplemented:** Read as ‘0’

bit 4-3 **BORV<1:0>:** Brown-out Reset Voltage bits(1)
11 = Minimum setting
.
.
.
00 = Maximum setting

bit 2-1 **BOREN<1:0>:** Brown-out Reset Enable bits(2)
11 = Brown-out Reset enabled in hardware only (SBOREN is disabled)
10 = Brown-out Reset enabled in hardware only and disabled in Sleep mode (SBOREN is disabled)
01 = Brown-out Reset enabled and controlled by software (SBOREN is enabled)
00 = Brown-out Reset disabled in hardware and software

bit 0 **$\overline{\text{PWRTEN}}$:** Power-up Timer Enable bit(2)
1 = PWRT disabled
0 = PWRT enabled

Note 1: See **Section 28.1 “DC Characteristics: Supply Voltage”** for specifications.
2: The Power-up Timer is decoupled from Brown-out Reset, allowing these features to be independently controlled.

© 2008 Microchip Technology Inc.

REGISTER 25-3: CONFIG2H: CONFIGURATION REGISTER 2 HIGH (BYTE ADDRESS 300003h)

U-0	U-0	U-0	R/P-1	R/P-1	R/P-1	R/P-1	R/P-1
—	—	—	WDTPS3	WDTPS2	WDTPS1	WDTPS0	WDTEN
bit 7							bit 0

Legend:			
R = Readable bit	W = Writable bit	U = Unimplemented bit, read as ‘0’	
-n = Value at POR	‘1’ = Bit is set	‘0’ = Bit is cleared	x = Bit is unknown

bit 7-5 **Unimplemented:** Read as ‘0’

bit 4-1 **WDTPS<3:0>:** Watchdog Timer Postscale Select bits
1111 = 1:32,768
1110 = 1:16,384
1101 = 1:8,192
1100 = 1:4,096
1011 = 1:2,048
1010 = 1:1,024
1001 = 1:512
1000 = 1:256
0111 = 1:128
0110 = 1:64
0101 = 1:32
0100 = 1:16
0011 = 1:8
0010 = 1:4
0001 = 1:2
0000 = 1:1

bit 0 **WDTEN:** Watchdog Timer Enable bit
1 = WDT enabled
0 = WDT disabled (control is placed on the SWDTEN bit)

REGISTER 25-4: CONFIG3L: CONFIGURATION REGISTER 3 LOW (BYTE ADDRESS 300004h)(1)

R/P-1	R/P-1	R/P-1	R/P-1	U-0	U-0	R/P-1	R/P-1
WAIT	BW	ABW1	ABW0	—	—	PM1	PM0
bit 7							bit 0

Legend:			
R = Readable bit	W = Writable bit	U = Unimplemented bit, read as ‘0’	
-n = Value at POR	‘1’ = Bit is set	‘0’ = Bit is cleared	x = Bit is unknown

bit 7 **WAIT:** External Bus Data Wait Enable bit
`1` = Wait selections are unavailable for table reads and table writes
`0` = Wait selections for table reads and table writes are determined by the WAIT<1:0> bits

bit 6 **BW:** Data Bus Width Select bit
`1` = 16-bit External Bus mode
`0` = 8-bit External Bus mode

bit 5-4 **ABW<1:0>:** Address Bus Width Select bits
`11` = 20-bit address bus
`10` = 16-bit address bus
`01` = 12-bit address bus
`00` = 8-bit address bus

bit 3-2 **Unimplemented:** Read as ‘`0`’

bit 1-0 **PM<1:0>:** Processor Data Memory Mode Select bits
`11` = Microcontroller mode
`10` = Microprocessor mode
`01` = Microprocessor with Boot Block mode
`00` = Extended Microcontroller mode

Note 1: This register is unimplemented in PIC18F6527/6622/6627/6722 devices.

© 2008 Microchip Technology Inc.

REGISTER 25-5: CONFIG3H: CONFIGURATION REGISTER 3 HIGH (BYTE ADDRESS 300005h)

R/P-1	U-0	U-0	U-0	U-0	R/P-0	R/P-1	R/P-1
MCLRE	—	—	—	—	LPT1OSC	ECCPMX(1)	CCP2MX
bit 7							bit 0

Legend:			
R = Readable bit	W = Writable bit	U = Unimplemented bit, read as ‘0’	
-n = Value at POR	‘1’ = Bit is set	‘0’ = Bit is cleared	x = Bit is unknown

bit 7 **MCLRE:** $\overline{\text{MCLR}}$ Pin Enable bit
1 = $\overline{\text{MCLR}}$ pin enabled; RG5 input pin disabled
0 = RG5 input pin enabled; $\overline{\text{MCLR}}$ disabled

bit 6-3 **Unimplemented:** Read as ‘0’

bit 2 **LPT1OSC:** Low-Power Timer1 Oscillator Enable bit
1 = Timer1 configured for low-power operation
0 = Timer1 configured for higher power operation

bit 1 **ECCPMX:** ECCP MUX bit(1)
1 = ECCP1/3 (P1B/P1C/P3B/P3C) are multiplexed onto RE6, RE5, RE4 and RE3 respectively
0 = ECCP1/3 (P1B/P1C/P3B/P3C) are multiplexed onto RH7, RH6, RH5 and RH4 respectively

bit 0 **CCP2MX:** CCP2 MUX bit
1 = ECCP2 input/output is multiplexed with RC1
0 = ECCP2 input/output is multiplexed with RB3 in Extended Microcontroller, Microprocessor or Microprocessor with Boot Block mode(1). ECCP2 is multiplexed with RE7 in Microcontroller mode.

Note 1: This feature is only available on PIC18F8527/8622/8627/8722 devices.

REGISTER 25-6: CONFIG4L: CONFIGURATION REGISTER 4 LOW (BYTE ADDRESS 300006h)

R/P-1	R/P-0	R/P-0	R/P-0	U-0	R/P-1	U-0	R/P-1
$\overline{\text{DEBUG}}$	XINST	BBSIZ1	BBSIZ0	—	LVP	—	STVREN
bit 7							bit 0

Legend:			
R = Readable bit	W = Writable bit	U = Unimplemented bit, read as ‘0’	
-n = Value at POR	‘1’ = Bit is set	‘0’ = Bit is cleared	x = Bit is unknown

bit 7 **$\overline{\text{DEBUG}}$:** Background Debugger Enable bit
1 = Background debugger disabled, RB6 and RB7 configured as general purpose I/O pins
0 = Background debugger enabled, RB6 and RB7 are dedicated to In-Circuit Debug

bit 6 **XINST:** Extended Instruction Set Enable bit
1 = Instruction set extension and Indexed Addressing mode enabled
0 = Instruction set extension and Indexed Addressing mode disabled (Legacy mode)

bit 5-4 **BBSIZ<1:0>:** Boot Block Size Select bits
11 = 4K words (8 Kbytes) boot block size
10 = 4K words (8 Kbytes) boot block size
01 = 2K words (4 Kbytes) boot block size
00 = 1K word (2 Kbytes) boot block size

bit 3 **Unimplemented:** Read as ‘0’

bit 2 **LVP:** Single-Supply ICSP™ Enable bit
1 = Single-Supply ICSP enabled
0 = Single-Supply ICSP disabled

bit 1 **Unimplemented:** Read as ‘0’

bit 0 **STVREN:** Stack Full/Underflow Reset Enable bit
1 = Stack full/underflow will cause Reset
0 = Stack full/underflow will not cause Reset

© 2008 Microchip Technology Inc.

REGISTER 25-7: CONFIG5L: CONFIGURATION REGISTER 5 LOW (BYTE ADDRESS 300008h)

R/C-1	R/C-1	R/C-1	R/C-1	R/C-1	R/C-1	R/C-1	R/C-1
CP7(1)	CP6(1)	CP5(2)	CP5(2)	CP3(3)	CP2	CP1	CP0
bit 7							bit 0

Legend:			
R = Readable bit	W = Writable bit	U = Unimplemented bit, read as ‘0’	
-n = Value at POR	‘1’ = Bit is set	‘0’ = Bit is cleared	x = Bit is unknown

bit 7 **CP7:** Code Protection bit(1)
1 = Block 7 (01C000-01FFFFh) not code-protected
0 = Block 7 (01C000-01FFFFh) code-protected

bit 6 **CP6:** Code Protection bit(1)
1 = Block 6 (01BFFF-018000h) not code-protected
0 = Block 6 (01BFFF-018000h) code-protected

bit 5 **CP5:** Code Protection bit(2)
1 = Block 5 (014000-017FFFh) not code-protected
0 = Block 5 (014000-017FFFh) code-protected

bit 4 **CP4:** Code Protection bit(2)
1 = Block 4 (010000-013FFFh) not code-protected
0 = Block 4 (010000-013FFFh) code-protected

bit 3 **CP3:** Code Protection bit(3)
1 = Block 3 (00C000-00FFFFh) not code-protected
0 = Block 3 (00C000-00FFFFh) code-protected

bit 2 **CP2:** Code Protection bit
1 = Block 2 (008000-00BFFFh) not code-protected
0 = Block 2 (008000-00BFFFh) code-protected

bit 1 **CP1:** Code Protection bit
1 = Block 1 (004000-007FFFh) not code-protected
0 = Block 1 (004000-007FFFh) code-protected

bit 0 **CP0:** Code Protection bit
1 = Block 0 (000800, 001000 or 002000(4)-003FFFh) not code-protected
0 = Block 0 (000800, 001000 or 002000(4)-003FFFh) code-protected

Note 1: Unimplemented in PIC18F6527/6622/6627/8527/8622/8627 devices; maintain this bit set.
2: Unimplemented in PIC18F6527/6622/8527/8622 devices; maintain this bit set.
3: Unimplemented in PIC18F6527/8527 devices; maintain this bit set.
4: Boot block size is determined by the BBSIZ<1:0> bits in CONFIG4L.

REGISTER 25-8: CONFIG5H: CONFIGURATION REGISTER 5 HIGH (BYTE ADDRESS 300009h)

R/C-1	R/C-1	U-0	U-0	U-0	U-0	U-0	U-0
CPD	CPB	—	—	—	—	—	—
bit 7							bit 0

Legend:			
R = Readable bit	W = Writable bit	U = Unimplemented bit, read as ‘0’	
-n = Value at POR	‘1’ = Bit is set	‘0’ = Bit is cleared	x = Bit is unknown

bit 7 **CPD:** Data EEPROM Code Protection bit
1 = Data EEPROM not code-protected
0 = Data EEPROM code-protected

bit 6 **CPB:** Boot Block Code Protection bit
1 = Boot block (000000-0007FFh) not code-protected
0 = Boot block (000000-0007FFh) code-protected

bit 5-0 **Unimplemented:** Read as ‘0’

© 2008 Microchip Technology Inc.

REGISTER 25-9: CONFIG6L: CONFIGURATION REGISTER 6 LOW (BYTE ADDRESS 30000Ah)

R/C-1	R/C-1	R/C-1	R/C-1	R/C-1	R/C-1	R/C-1	R/C-1
WRT7(1)	WRT6(1)	WRT5(2)	WRT4(2)	WRT3(3)	WRT2	WRT1	WRT0
bit 7							bit 0

Legend:			
R = Readable bit	W = Writable bit	U = Unimplemented bit, read as ‘0’	
-n = Value at POR	‘1’ = Bit is set	‘0’ = Bit is cleared	x = Bit is unknown

bit 7 **WRT7:** Write Protection bit(1)
1 = Block 7 (01C000-01FFFFh) not write-protected
0 = Block 7 (01C000-01FFFFh) write-protected

bit 6 **WRT6:** Write Protection bit(1)
1 = Block 6 (01BFFF-018000h) not write-protected
0 = Block 6 (01BFFF-018000h) write-protected

bit 5 **WRT5:** Write Protection bit(2)
1 = Block 5 (014000-017FFFh) not write-protected
0 = Block 5 (014000-017FFFh) write-protected

bit 4 **WRT4:** Write Protection bit(2)
1 = Block 4 (010000-013FFFh) not write-protected
0 = Block 4 (010000-013FFFh) write-protected

bit 3 **WRT3:** Write Protection bit(3)
1 = Block 3 (00C000-00FFFFh) not write-protected
0 = Block 3 (00C000-00FFFFh) write-protected

bit 2 **WRT2:** Write Protection bit
1 = Block 2 (008000-00BFFFh) not write-protected
0 = Block 2 (008000-00BFFFh) write-protected

bit 1 **WRT1:** Write Protection bit
1 = Block 1 (004000-007FFFh) not write-protected
0 = Block 1 (004000-007FFFh) write-protected

bit 0 **WRT0:** Write Protection bit
1 = Block 0 (000800, 001000 or 002000(4)-003FFFh) not write-protected
0 = Block 0 (000800, 001000 or 002000(4)-003FFFh) write-protected

Note 1: Unimplemented in PIC18F6527/6622/6627/8527/8622/8627 devices; maintain this bit set.
2: Unimplemented in PIC18F6527/6622/8527/8622 devices; maintain this bit set.
3: Unimplemented in PIC18F6527/8527 devices; maintain this bit set.
4: Boot block size is determined by the BBSIZ<1:0> bits in CONFIG4L.

REGISTER 25-10: CONFIG6H: CONFIGURATION REGISTER 6 HIGH (BYTE ADDRESS 30000Bh)

R/C-1	R/C-1	R-1	U-0	U-0	U-0	U-0	U-0
WRTD	WRTB	WRTC(2)	—	—	—	—	—
bit 7							bit 0

Legend:			
R = Readable bit	W = Writable bit	U = Unimplemented bit, read as ‘0’	
-n = Value at POR	‘1’ = Bit is set	‘0’ = Bit is cleared	x = Bit is unknown

bit 7 **WRTD:** Data EEPROM Write Protection bit
1 = Data EEPROM not write-protected
0 = Data EEPROM write-protected

bit 6 **WRTB:** Boot Block Write Protection bit
1 = Boot block (000000-007FFF, 000FFF or 001FFFh(1)) not write-protected
0 = Boot block (000000-007FFF, 000FFF or 001FFFh(1)) write-protected

bit 5 **WRTC:** Configuration Register Write Protection bit(2)
1 = Configuration registers (300000-3000FFh) not write-protected
0 = Configuration registers (300000-3000FFh) write-protected

bit 4-0 **Unimplemented:** Read as ‘0’

Note 1: Boot block size is determined by the BBSIZ<1:0> bits in CONFIG4L.
2: This bit is read-only in normal execution mode; it can be written only in Program mode.

© 2008 Microchip Technology Inc.

REGISTER 25-11: CONFIG7L: CONFIGURATION REGISTER 7 LOW (BYTE ADDRESS 30000Ch)

R/C-1	R/C-1	R/C-1	R/C-1	R/C-1	R/C-1	R/C-1	R/C-1
EBTR7[(1)]	EBTR6[(1)]	EBTR5[(2)]	EBTR4[(2)]	EBTR3[(3)]	EBTR2	EBTR1	EBTR0
bit 7							bit 0

Legend:			
R = Readable bit	W = Writable bit	U = Unimplemented bit, read as ‘0’	
-n = Value at POR	‘1’ = Bit is set	‘0’ = Bit is cleared	x = Bit is unknown

bit 7 **EBTR7:** Table Read Protection bit[(1)]
1 = Block 7 (01C000-01FFFFh) not protected from table reads executed in other blocks
0 = Block 7 (01C000-01FFFFh) protected from table reads executed in other blocks

bit 6 **EBTR6:** Table Read Protection bit[(1)]
1 = Block 6 (018000-01BFFFh) not protected from table reads executed in other blocks
0 = Block 6 (018000-01BFFFh) protected from table reads executed in other blocks

bit 5 **EBTR5:** Table Read Protection bit[(2)]
1 = Block 5 (014000-017FFFh) not protected from table reads executed in other blocks
0 = Block 5 (014000-017FFFh) protected from table reads executed in other blocks

bit 4 **EBTR4:** Table Read Protection bit[(2)]
1 = Block 4 (010000-013FFFh) not protected from table reads executed in other blocks
0 = Block 4 (010000-013FFFh) protected from table reads executed in other blocks

bit 3 **EBTR3:** Table Read Protection bit[(3)]
1 = Block 3 (00C000-00FFFFh) not protected from table reads executed in other blocks
0 = Block 3 (00C000-00FFFFh) protected from table reads executed in other blocks

bit 2 **EBTR2**: Table Read Protection bit
1 = Block 2 (008000-00BFFFh) not protected from table reads executed in other blocks
0 = Block 2 (008000-00BFFFh) protected from table reads executed in other blocks

bit 1 **EBTR1:** Table Read Protection bit
1 = Block 1 (004000-007FFFh) not protected from table reads executed in other blocks
0 = Block 1 (004000-007FFFh) protected from table reads executed in other blocks

bit 0 **EBTR0:** Table Read Protection bit
1 = Block 0 (000800, 001000 or 002000[(4)]-003FFFh) not protected from table reads executed in other blocks
0 = Block 0 (000800, 001000 or 002000[(4)]-003FFFh) protected from table reads executed in other blocks

Note 1: Unimplemented in PIC18F6527/6622/6627/8527/8622/8627 devices; maintain this bit set.
2: Unimplemented in PIC18F6527/6622/8527/8622 devices; maintain this bit set.
3: Unimplemented in PIC18F6527/8527 devices; maintain this bit set.
4: Unimplemented in PIC18F6527/8527 devices; maintain this bit set.

REGISTER 25-12: CONFIG7H: CONFIGURATION REGISTER 7 HIGH (BYTE ADDRESS 30000Dh)

U-0	R/C-1	U-0	U-0	U-0	U-0	U-0	U-0
—	EBTRB	—	—	—	—	—	—
bit 7							bit 0

Legend:			
R = Readable bit	W = Writable bit	U = Unimplemented bit, read as ‘0’	
-n = Value at POR	‘1’ = Bit is set	‘0’ = Bit is cleared	x = Bit is unknown

bit 7 **Unimplemented:** Read as ‘0’

bit 6 **EBTRB:** Boot Block Table Read Protection bit

1 = Boot block (000000-007FFF, 000FFF or 001FFFh[(1)]) not protected from table reads executed in other blocks

0 = Boot block (000000-007FFF, 000FFF or 001FFFh[(1)]) protected from table reads executed in other blocks

bit 5-0 **Unimplemented:** Read as ‘0’

Note 1: Boot block size is determined by the BBSIZ<1:0> bits in CONFIG4L.

© 2008 Microchip Technology Inc.

REGISTER 25-13: DEVID1: DEVICE ID REGISTER 1 FOR THE PIC18F8722 FAMILY

R	R	R	R	R	R	R	R
DEV2	DEV1	DEV0	REV4	REV3	REV2	REV1	REV0
bit 7							bit 0

Legend:			
R = Readable bit	W = Writable bit	U = Unimplemented bit, read as ‘0’	
-n = Value at POR	‘1’ = Bit is set	‘0’ = Bit is cleared	x = Bit is unknown

bit 7-5 **DEV<2:0>:** Device ID bits

`001` = PIC18F8722
`111` = PIC18F8627
`101` = PIC18F8622
`011` = PIC18F8527
`000` = PIC18F6722
`110` = PIC18F6627
`100` = PIC18F6622
`010` = PIC18F6527

bit 4-0 **REV<4:0>:** Revision ID bits

These bits are used to indicate the device revision.

REGISTER 25-14: DEVID2: DEVICE ID REGISTER 2 FOR THE PIC18F8722 FAMILY

R	R	R	R	R	R	R	R
DEV10(1)	DEV9(1)	DEV8(1)	DEV7(1)	DEV6(1)	DEV5(1)	DEV4(1)	DEV3(1)
bit 7							bit 0

Legend:			
R = Readable bit	W = Writable bit	U = Unimplemented bit, read as ‘0’	
-n = Value at POR	‘1’ = Bit is set	‘0’ = Bit is cleared	x = Bit is unknown

bit 7-0 **DEV<10:3>:** Device ID bits(1)

These bits are used with the DEV<2:0> bits in the Device ID Register 1 to identify the part number.

`0001 0100` = PIC18F6722/8722 devices
`0001 0011` = PIC18F6527/6622/6627/8527/8622/8627 devices

Note 1: These values for DEV<10:3> may be shared with other devices. The specific device is always identified by using the entire DEV<10:0> bit sequence.

25.2 Watchdog Timer (WDT)

For the PIC18F8722 family of devices, the WDT is driven by the INTRC source. When the WDT is enabled, the clock source is also enabled. The nominal WDT period is 4 ms and has the same stability as the INTRC oscillator.

The 4 ms period of the WDT is multiplied by a 16-bit postscaler. Any output of the WDT postscaler is selected by a multiplexor, controlled by bits in Configuration Register 2H. Available periods range from 4 ms to 131.072 seconds (2.18 minutes). The WDT and postscaler are cleared when any of the following events occur: a `SLEEP` or `CLRWDT` instruction is executed, the IRCF bits (OSCCON<6:4>) are changed or a clock failure has occurred.

> **Note 1:** The `CLRWDT` and `SLEEP` instructions clear the WDT and postscaler counts when executed.
>
> **2:** Changing the setting of the IRCF bits (OSCCON<6:4>) clears the WDT and postscaler counts.
>
> **3:** When a `CLRWDT` instruction is executed, the postscaler count will be cleared.

25.2.1 CONTROL REGISTER

Register 25-15 shows the WDTCON register. This is a readable and writable register which contains a control bit that allows software to override the WDT enable Configuration bit, but only if the Configuration bit has disabled the WDT.

FIGURE 25-1: WDT BLOCK DIAGRAM

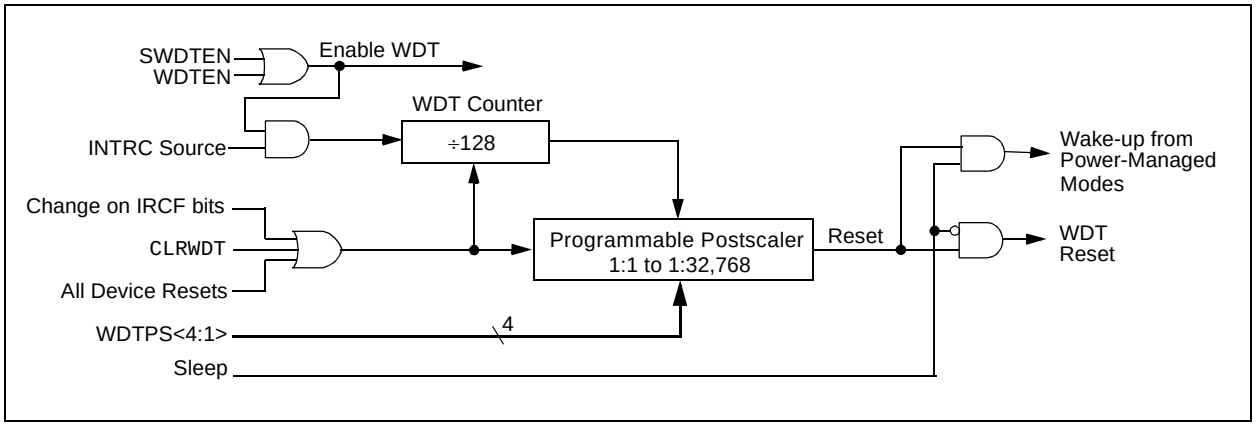

© 2008 Microchip Technology Inc.

REGISTER 25-15: WDTCON: WATCHDOG TIMER CONTROL REGISTER

U-0	U-0	U-0	U-0	U-0	U-0	U-0	R/W-0
—	—	—	—	—	—	—	SWDTEN(1)
bit 7							bit 0

Legend:			
R = Readable bit	W = Writable bit	U = Unimplemented bit, read as ‘0’	
-n = Value at POR	‘1’ = Bit is set	‘0’ = Bit is cleared	x = Bit is unknown

bit 7-1 **Unimplemented**: Read as ‘0’

bit 0 **SWDTEN:** Software Controlled Watchdog Timer Enable bit(1)
1 = Watchdog Timer is on
0 = Watchdog Timer is off

Note 1: This bit has no effect if the Configuration bit, WDTEN, is enabled.

TABLE 25-2: SUMMARY OF WATCHDOG TIMER REGISTERS

Name	Bit 7	Bit 6	Bit 5	Bit 4	Bit 3	Bit 2	Bit 1	Bit 0	Reset Values on page
RCON	IPEN	SBOREN	—	$\overline{RI}$	$\overline{TO}$	$\overline{PD}$	$\overline{POR}$	$\overline{BOR}$	56
WDTCON	—	—	—	—	—	—	—	SWDTEN	58

Legend: — = unimplemented, read as ‘0’. Shaded cells are not used by the Watchdog Timer.

25.3 Two-Speed Start-up

The Two-Speed Start-up feature helps to minimize the latency period from oscillator start-up to code execution by allowing the microcontroller to use the INTOSC oscillator as a clock source until the primary clock source is available. It is enabled by setting the IESO Configuration bit.

Two-Speed Start-up should be enabled only if the primary oscillator mode is LP, XT, HS or HSPLL (crystal-based modes). Other sources do not require an OST start-up delay; for these, Two-Speed Start-up should be disabled.

When enabled, Resets and wake-ups from Sleep mode cause the device to configure itself to run from the internal oscillator block as the clock source, following the time-out of the Power-up Timer after a Power-on Reset is enabled. This allows almost immediate code execution while the primary oscillator starts and the OST is running. Once the OST times out, the device automatically switches to PRI_RUN mode.

To use a higher clock speed on wake-up, the INTOSC or postscaler clock sources can be selected to provide a higher clock speed by setting bits IRCF<2:0> immediately after Reset. For wake-ups from Sleep, the INTOSC or postscaler clock sources can be selected by setting the IRCF2:0> bits prior to entering Sleep mode.

In all other power-managed modes, Two-Speed Start-up is not used. The device will be clocked by the currently selected clock source until the primary clock source becomes available. The setting of the IESO bit is ignored.

25.3.1 SPECIAL CONSIDERATIONS FOR USING TWO-SPEED START-UP

While using the INTOSC oscillator in Two-Speed Start-up, the device still obeys the normal command sequences for entering power-managed modes, including multiple SLEEP instructions (refer to **Section 3.1.4 "Multiple Sleep Commands"**). In practice, this means that user code can change the SCS<1:0> bit settings or issue SLEEP instructions before the OST times out. This would allow an application to briefly wake-up, perform routine "housekeeping" tasks and return to Sleep before the device starts to operate from the primary oscillator.

User code can also check if the primary clock source is currently providing the device clocking by checking the status of the OSTS bit (OSCCON<3>). If the bit is set, the primary oscillator is providing the clock. Otherwise, the internal oscillator block is providing the clock during wake-up from Reset or Sleep mode.

FIGURE 25-2: TIMING TRANSITION FOR TWO-SPEED START-UP (INTOSC TO HSPLL)

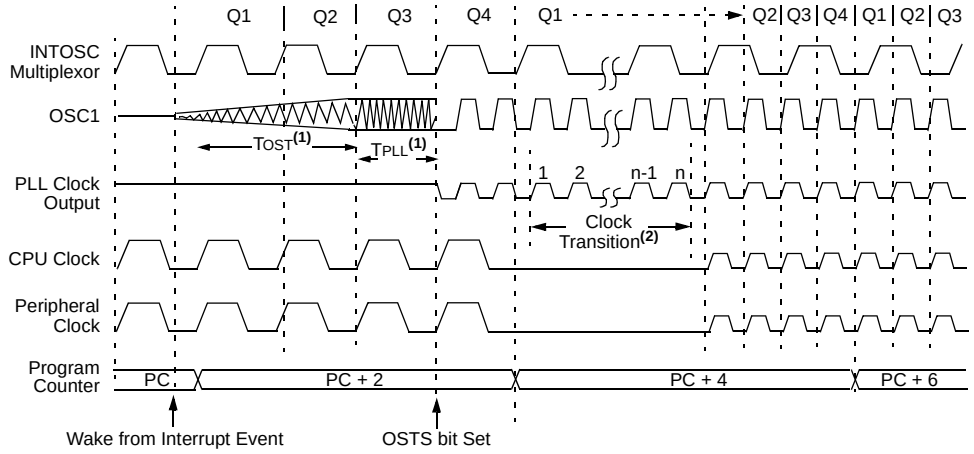

Note 1: TOST = 1024 TOSC; TPLL = 2 ms (approx). These intervals are not shown to scale.

2: Clock transition typically occurs within 2-4 TOSC.

© 2008 Microchip Technology Inc.

25.4 Fail-Safe Clock Monitor

The Fail-Safe Clock Monitor (FSCM) allows the microcontroller to continue operation in the event of an external oscillator failure by automatically switching the device clock to the internal oscillator block. The FSCM function is enabled by setting the FCMEN Configuration bit.

When FSCM is enabled, the INTRC oscillator runs at all times to monitor clocks to peripherals and provide a backup clock in the event of a clock failure. Clock monitoring (shown in Figure 25-3) is accomplished by creating a sample clock signal, which is the INTRC output divided by 64. This allows ample time between FSCM sample clocks for a peripheral clock edge to occur. The peripheral device clock and the sample clock are presented as inputs to the Clock Monitor latch (CM). The CM is set on the falling edge of the device clock source, but cleared on the rising edge of the sample clock.

FIGURE 25-3: FSCM BLOCK DIAGRAM

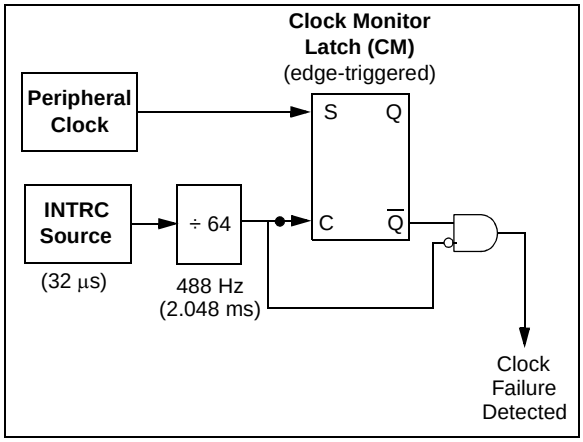

Clock failure is tested for on the falling edge of the sample clock. If a sample clock falling edge occurs while CM is still set, a clock failure has been detected (Figure 25-4). This causes the following:

- the FSCM generates an oscillator fail interrupt by setting bit, OSCFIF (PIR2<7>);
- the device clock source is switched to the internal oscillator block (OSCCON is not updated to show the current clock source – this is the fail-safe condition) and
- the WDT is reset.

During switchover, the postscaler frequency from the internal oscillator block may not be sufficiently stable for timing sensitive applications. In these cases, it may be desirable to select another clock configuration and enter an alternate power-managed mode. This can be done to attempt a partial recovery or execute a controlled shutdown. See **Section 3.1.4 "Multiple Sleep Commands"** and **Section 25.3.1 "Special Considerations for Using Two-Speed Start-up"** for more details.

To use a higher clock speed on wake-up, the INTOSC or postscaler clock sources can be selected to provide a higher clock speed by setting bits, IRCF<2:0>, immediately after Reset. For wake-ups from Sleep, the INTOSC or postscaler clock sources can be selected by setting the IRCF<2:0> bits prior to entering Sleep mode.

The FSCM will detect failures of the primary or secondary clock sources only. If the internal oscillator block fails, no failure would be detected, nor would any action be possible.

25.4.1 FSCM AND THE WATCHDOG TIMER

Both the FSCM and the WDT are clocked by the INTRC oscillator. Since the WDT operates with a separate divider and counter, disabling the WDT has no effect on the operation of the INTRC oscillator when the FSCM is enabled.

As already noted, the clock source is switched to the INTOSC clock when a clock failure is detected. Depending on the frequency selected by the IRCF<2:0> bits, this may mean a substantial change in the speed of code execution. If the WDT is enabled with a small prescale value, a decrease in clock speed allows a WDT time-out to occur and a subsequent device Reset. For this reason, fail-safe clock events also reset the WDT and postscaler, allowing it to start timing from when execution speed was changed and decreasing the likelihood of an erroneous time-out.

25.4.2 EXITING FAIL-SAFE OPERATION

The fail-safe condition is terminated by either a device Reset or by entering a power-managed mode. On Reset, the controller starts the primary clock source specified in Configuration Register 1H (with any required start-up delays that are required for the oscillator mode, such as OST or PLL timer). The INTOSC multiplexor provides the device clock until the primary clock source becomes ready (similar to a Two-Speed Start-up). The clock source is then switched to the primary clock (indicated by the OSTS bit in the OSCCON register becoming set). The Fail-Safe Clock Monitor then resumes monitoring the peripheral clock.

The primary clock source may never become ready during start-up. In this case, operation is clocked by the INTOSC multiplexor. The OSCCON register will remain in its Reset state until a power-managed mode is entered.

FIGURE 25-4: FSCM TIMING DIAGRAM

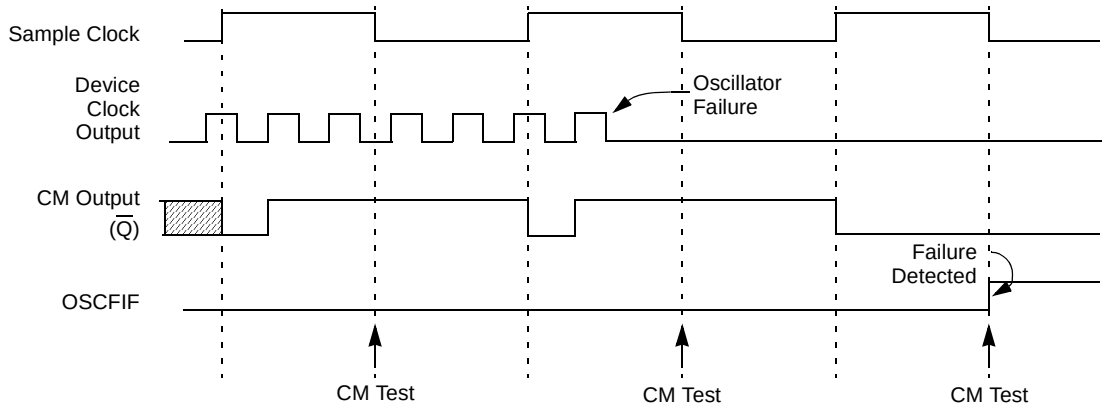

Note: The device clock is normally at a much higher frequency than the sample clock. The relative frequencies in this example have been chosen for clarity.

25.4.3 FSCM INTERRUPTS IN POWER-MANAGED MODES

By entering a power-managed mode, the clock multiplexor selects the clock source selected by the OSCCON register. Fail-Safe Monitoring of the power-managed clock source resumes in the power-managed mode.

If an oscillator failure occurs during power-managed operation, the subsequent events depend on whether or not the oscillator failure interrupt is enabled. If enabled (OSCFIF = 1), code execution will be clocked by the INTOSC multiplexer. An automatic transition back to the failed clock source will not occur.

If the interrupt is disabled, subsequent interrupts while in Idle mode will cause the CPU to begin executing instructions while being clocked by the INTOSC source.

25.4.4 POR OR WAKE FROM SLEEP

The FSCM is designed to detect oscillator failure at any point after the device has exited Power-on Reset (POR) or low-power Sleep mode. When the primary device clock is EC, RC or INTRC modes, monitoring can begin immediately following these events.

For oscillator modes involving a crystal or resonator (HS, HSPLL, LP or XT), the situation is somewhat different. Since the oscillator may require a start-up time considerably longer than the FCSM sample clock time, a false clock failure may be detected. To prevent this, the internal oscillator block is automatically configured as the device clock and functions until the primary clock is stable (the OST and PLL timers have timed out). This is identical to Two-Speed Start-up mode. Once the primary clock is stable, the INTRC returns to its role as the FSCM source.

Note: The same logic that prevents false oscillator failure interrupts on POR, or wake from Sleep, will also prevent the detection of the oscillator's failure to start at all following these events. This can be avoided by monitoring the OSTS bit and using a timing routine to determine if the oscillator is taking too long to start. Even so, no oscillator failure interrupt will be flagged.

As noted in **Section 25.3.1 "Special Considerations for Using Two-Speed Start-up"**, it is also possible to select another clock configuration and enter an alternate power-managed mode while waiting for the primary clock to become stable. When the new power-managed mode is selected, the primary clock is disabled.

© 2008 Microchip Technology Inc.

25.5 Program Verification and Code Protection

The user program memory is divided into four blocks for PIC18F6527/8527 devices, five blocks for PIC18F6622/8622 devices, six blocks for PIC18F6627/8627 devices and eight blocks for PIC18F6722/8722 devices. One of these is a boot block of 2, 4 or 8 Kbytes. The remainder of the memory is divided into blocks on binary boundaries.

Each of the blocks has three code protection bits associated with them. They are:

- Code-Protect bit (CPn)
- Write-Protect bit (WRTn)
- External Block Table Read bit (EBTRn)

Figure 25-5 shows the program memory organization for 48, 64, 96 and 128-Kbyte devices and the specific code protection bit associated with each block. The actual locations of the bits are summarized in Table 25-3.

FIGURE 25-5: CODE-PROTECTED PROGRAM MEMORY FOR THE PIC18F8722 FAMILY

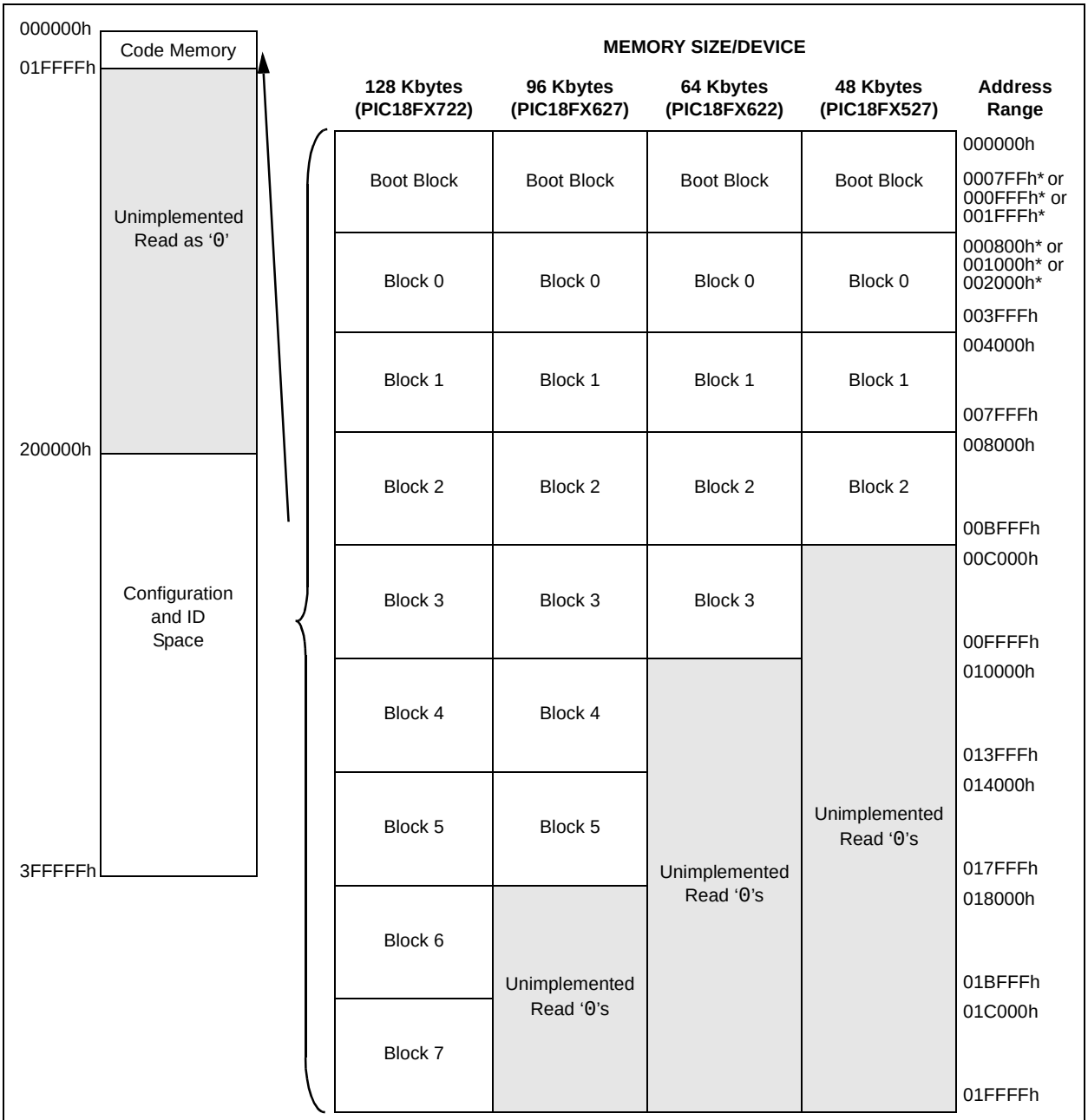

Note: Sizes of memory areas are not to scale.
* Boot block size is determined by the BBSIZ<1:0> bits in CONFIG4L.

TABLE 25-3: SUMMARY OF CODE PROTECTION REGISTERS

File Name		Bit 7	Bit 6	Bit 5	Bit 4	Bit 3	Bit 2	Bit 1	Bit 0
300008h	CONFIG5L	CP7(1)	CP6(1)	CP5(2)	CP4(2)	CP3(3)	CP2	CP1	CP0
300009h	CONFIG5H	CPD	CPB	—	—	—	—	—	—
30000Ah	CONFIG6L	WRT7(1)	WRT6(1)	WRT5(2)	WRT4(2)	WRT3(3)	WRT2	WRT1	WRT0
30000Bh	CONFIG6H	WRTD	WRTB	WRTC	—	—	—	—	—
30000Ch	CONFIG7L	EBRT7(1)	EBRT6(1)	EBTR5(2)	EBTR4(2)	EBTR3(3)	EBTR2	EBTR1	EBTR0
30000Dh	CONFIG7H	—	EBTRB	—	—	—	—	—	—

Legend: Shaded cells are unimplemented.

Note 1: Unimplemented in PIC18F6527/6622/6627/8527/8622/8627 devices; maintain this bit set.

2: Unimplemented in PIC18F6527/6622/8527/8622 devices; maintain this bit set.

3: Unimplemented in PIC18F6527/8527 devices; maintain this bit set.

25.5.1 PROGRAM MEMORY CODE PROTECTION

The program memory may be read to or written from any location using the table read and table write instructions. The device ID may be read with table reads. The Configuration registers may be read and written with the table read and table write instructions.

In normal execution mode, the CPn bits have no direct effect. CPn bits inhibit external reads and writes. A block of user memory may be protected from table writes if the WRTn Configuration bit is '0'. The EBTRn bits control table reads. For a block of user memory with the EBTRn bit set to '0', a table read instruction that executes from within that block is allowed to read. A table read instruction that executes from a location outside of that block is not allowed to read and will result in reading '0's. Figures 25-6 through 25-8 illustrate table write and table read protection.

> **Note:** Code protection bits may only be written to a '0' from a '1' state. It is not possible to write a '1' to a bit in the '0' state. Code protection bits are only set to '1' by a full chip erase or block erase function. The full chip erase and block erase functions can only be initiated via ICSP or an external programmer. Refer to the device programming specification for more information.

FIGURE 25-6: TABLE WRITE (WRTn) DISALLOWED

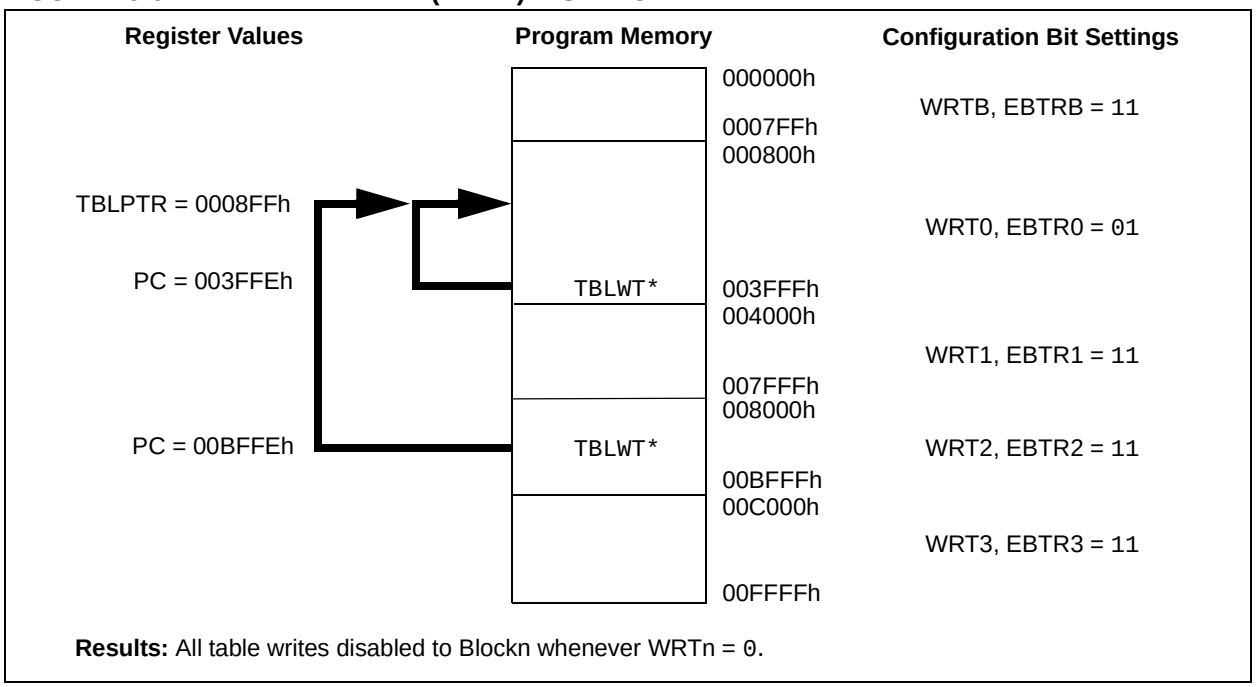

© 2008 Microchip Technology Inc.

FIGURE 25-7: EXTERNAL BLOCK TABLE READ (EBTRn) DISALLOWED

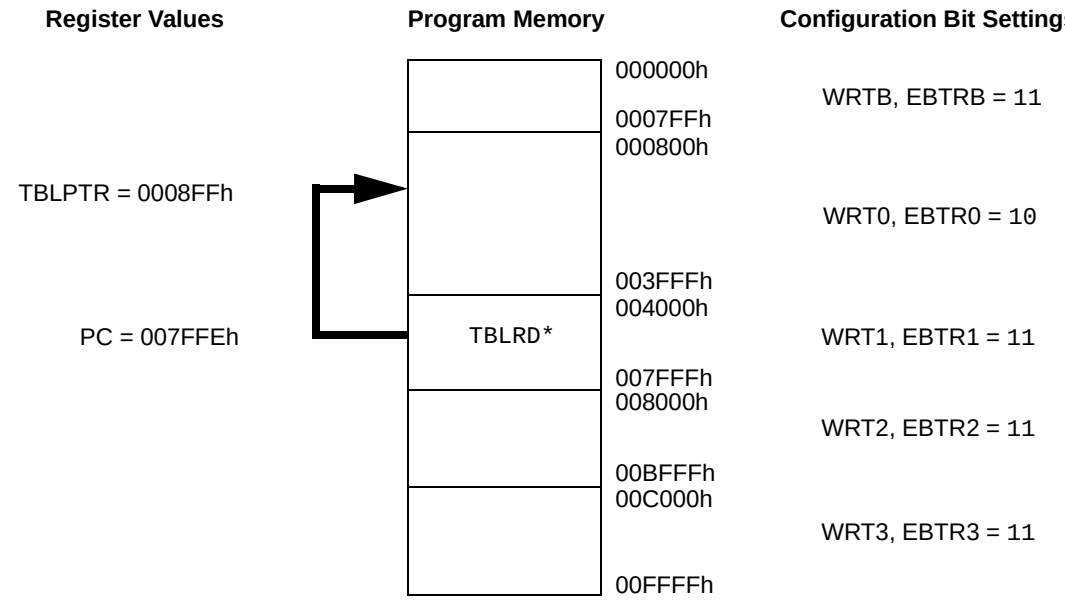

Results: All table reads from external blocks to Blockn are disabled whenever EBTRn = 0.
TABLAT register returns a value of '0'.

FIGURE 25-8: EXTERNAL BLOCK TABLE READ (EBTRn) ALLOWED

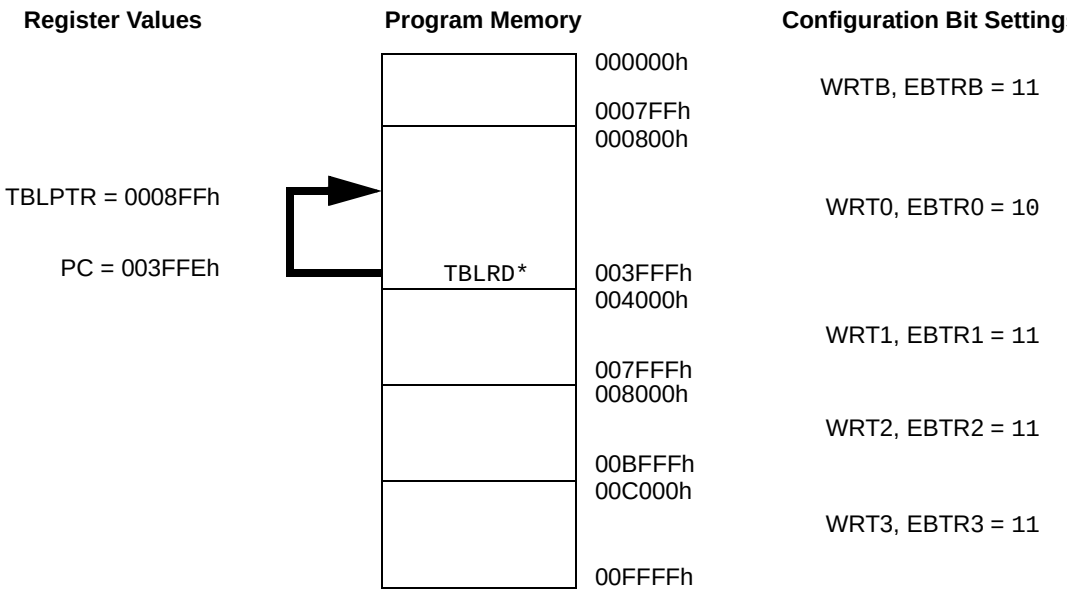

Results: Table reads permitted within Blockn, even when EBTRBn = 0.
TABLAT register returns the value of the data at the location TBLPTR.

25.5.2 DATA EEPROM CODE PROTECTION

The entire data EEPROM is protected from external reads and writes by two bits: CPD and WRTD. CPD inhibits external reads and writes of data EEPROM. WRTD inhibits internal and external writes to data EEPROM. The CPU can always read data EEPROM under normal operation, regardless of the protection bit settings.

25.5.3 CONFIGURATION REGISTER PROTECTION

The Configuration registers can be write-protected. The WRTC bit controls protection of the Configuration registers. In normal execution mode, the WRTC bit is readable only. WRTC can only be written via ICSP or an external programmer.

25.6 ID Locations

Eight memory locations (200000h-200007h) are designated as ID locations, where the user can store checksum or other code identification numbers. These locations are both readable and writable during normal execution through the `TBLRD` and `TBLWT` instructions or during program/verify. The ID locations can be read when the device is code-protected.

25.7 In-Circuit Serial Programming

The PIC18F8722 family of devices can be serially programmed while in the end application circuit. This is simply done with two lines for clock and data and three other lines for power, ground and the programming voltage. This allows customers to manufacture boards with unprogrammed devices and then program the microcontroller just before shipping the product. This also allows the most recent firmware or a custom firmware to be programmed.

25.8 In-Circuit Debugger

When the $\overline{\text{DEBUG}}$ Configuration bit is programmed to a '0', the In-Circuit Debugger functionality is enabled. This function allows simple debugging functions when used with MPLAB® IDE. When the microcontroller has this feature enabled, some resources are not available for general use. Table 25-4 shows which resources are required by the background debugger.

TABLE 25-4: DEBUGGER RESOURCES

I/O pins:	RB6, RB7
Stack:	2 levels
Program Memory:	512 bytes
Data Memory:	10 bytes

To use the In-Circuit Debugger function of the microcontroller, the design must implement In-Circuit Serial Programming connections to RG5/$\overline{\text{MCLR}}$/VPP, VDD, VSS, RB7 and RB6. This will interface to the In-Circuit Debugger module available from Microchip or one of the third party development tool companies.

25.9 Single-Supply ICSP Programming

The LVP Configuration bit enables Single-Supply ICSP Programming (formerly known as Low-Voltage ICSP Programming or LVP). When Single-Supply Programming is enabled, the microcontroller can be programmed without requiring high voltage being applied to the RG5/$\overline{\text{MCLR}}$/VPP pin, but the RB5/KBI1/PGM pin is then dedicated to controlling Program mode entry and is not available as a general purpose I/O pin.

While programming, using single-supply programming mode, VDD is applied to the RG5/$\overline{\text{MCLR}}$/VPP pin as in normal execution mode. To enter Programming mode, VDD is applied to the PGM pin.

Note 1: High-voltage programming is always available, regardless of the state of the LVP bit or the PGM pin, by applying VIHH to the $\overline{\text{MCLR}}$ pin.

2: By default, Single-Supply ICSP is enabled in unprogrammed devices (as supplied from Microchip) and erased devices.

3: When Single-Supply Programming is enabled, the RB5 pin can no longer be used as a general purpose I/O pin.

4: When LVP is enabled, externally pull the PGM pin to VSS to allow normal program execution.

If Single-Supply ICSP Programming mode will not be used, the LVP bit can be cleared. RB5/KBI1/PGM then becomes available as the digital I/O pin, RB5. The LVP bit may be set or cleared only when using standard high-voltage programming (VIHH applied to the RG5/$\overline{\text{MCLR}}$/VPP pin). Once LVP has been disabled, only the standard high-voltage programming is available and must be used to program the device.

Memory that is not code-protected can be erased using a block erase, or erased row by row, then written at any specified VDD. If code-protected memory is to be erased, a block erase is required. If a block erase is to be performed when using Low-Voltage Programming, the device must be supplied with VDD of 4.5V to 5.5V.

© 2008 Microchip Technology Inc.

26.0 INSTRUCTION SET SUMMARY

The PIC18F8722 family of devices incorporates the standard set of 75 PIC18 core instructions, as well as an extended set of 8 new instructions for the optimization of code that is recursive or that utilizes a software stack. The extended set is discussed later in this section.

26.1 Standard Instruction Set

The standard PIC18 instruction set adds many enhancements to the previous PIC® MCU instruction sets, while maintaining an easy migration from these PIC MCU instruction sets. Most instructions are a single program memory word (16 bits), but there are four instructions that require two program memory locations.

Each single-word instruction is a 16-bit word divided into an opcode, which specifies the instruction type and one or more operands, which further specify the operation of the instruction.

The instruction set is highly orthogonal and is grouped into four basic categories:

- **Byte-oriented** operations
- **Bit-oriented** operations
- **Literal** operations
- **Control** operations

The PIC18 instruction set summary in Table 26-2 lists **byte-oriented**, **bit-oriented**, **literal** and **control** operations. Table 26-1 shows the opcode field descriptions.

Most **byte-oriented** instructions have three operands:

1. The file register (specified by ‘f’)
2. The destination of the result (specified by ‘d’)
3. The accessed memory (specified by ‘a’)

The file register designator ‘f’ specifies which file register is to be used by the instruction. The destination designator ‘d’ specifies where the result of the operation is to be placed. If ‘d’ is zero, the result is placed in the WREG register. If ‘d’ is one, the result is placed in the file register specified in the instruction.

All **bit-oriented** instructions have three operands:

1. The file register (specified by ‘f’)
2. The bit in the file register (specified by ‘b’)
3. The accessed memory (specified by ‘a’)

The bit field designator ‘b’ selects the number of the bit affected by the operation, while the file register designator ‘f’ represents the number of the file in which the bit is located.

The **literal** instructions may use some of the following operands:

- A literal value to be loaded into a file register (specified by ‘k’)
- The desired FSR register to load the literal value into (specified by ‘f’)
- No operand required (specified by ‘—’)

The **control** instructions may use some of the following operands:

- A program memory address (specified by ‘n’)
- The mode of the `CALL` or `RETURN` instructions (specified by ‘s’)
- The mode of the table read and table write instructions (specified by ‘m’)
- No operand required (specified by ‘—’)

All instructions are a single word, except for four double-word instructions. These instructions were made double-word to contain the required information in 32 bits. In the second word, the 4 MSbs are 1’s. If this second word is executed as an instruction (by itself), it will execute as a `NOP`.

All single-word instructions are executed in a single instruction cycle, unless a conditional test is true or the program counter is changed as a result of the instruction. In these cases, the execution takes two instruction cycles with the additional instruction cycle(s) executed as a `NOP`.

The double word instructions execute in two instruction cycles.

One instruction cycle consists of four oscillator periods. Thus, for an oscillator frequency of 4 MHz, the normal instruction execution time is 1 μs. If a conditional test is true, or the program counter is changed as a result of an instruction, the instruction execution time is 2 μs. Two-word branch instructions (if true) would take 3 μs.

Figure 26-1 shows the general formats that the instructions can have. All examples use the convention ‘nnh’ to represent a hexadecimal number.

The Instruction Set Summary, shown in Table 26-2, lists the standard instructions recognized by the Microchip MPASM™ Assembler.

Section 26.1.1 “Standard Instruction Set” provides a description of each instruction.

TABLE 26-1: OPCODE FIELD DESCRIPTIONS

Field	Description
a	RAM access bit: a = 0: RAM location in Access RAM (BSR register is ignored) a = 1: RAM bank is specified by BSR register
bbb	Bit address within an 8-bit file register (0 to 7).
BSR	Bank Select Register. Used to select the current RAM bank.
C, DC, Z, OV, N	ALU status bits: **C**arry, **D**igit **C**arry, **Z**ero, **Ov**erflow, **N**egative.
d	Destination select bit: d = 0: store result in WREG d = 1: store result in file register f
dest	Destination: either the WREG register or the specified register file location.
f	8-bit Register file address (00h to FFh), or 2-bit FSR designator (0h to 3h).
f_s	12-bit Register file address (000h to FFFh). This is the source address.
f_d	12-bit Register file address (000h to FFFh). This is the destination address.
GIE	Global Interrupt Enable bit.
k	Literal field, constant data or label (may be either an 8-bit, 12-bit or a 20-bit value).
label	Label name.
mm * *+ *- +*	The mode of the TBLPTR register for the table read and table write instructions. Only used with table read and table write instructions: No Change to register (such as TBLPTR with table reads and writes) Post-Increment register (such as TBLPTR with table reads and writes) Post-Decrement register (such as TBLPTR with table reads and writes) Pre-Increment register (such as TBLPTR with table reads and writes)
n	The relative address (2's complement number) for relative branch instructions or the direct address for Call/Branch and Return instructions.
PC	Program Counter.
PCL	Program Counter Low Byte.
PCH	Program Counter High Byte.
PCLATH	Program Counter High Byte Latch.
PCLATU	Program Counter Upper Byte Latch.
$\overline{PD}$	Power-Down bit.
PRODH	Product of Multiply High Byte.
PRODL	Product of Multiply Low Byte.
s	Fast Call/Return mode select bit: s = 0: do not update into/from shadow registers s = 1: certain registers loaded into/from shadow registers (Fast mode)
TBLPTR	21-bit Table Pointer (points to a Program Memory location).
TABLAT	8-bit Table Latch.
$\overline{TO}$	Time-out bit.
TOS	Top-of-Stack.
u	Unused or Unchanged.
WDT	Watchdog Timer.
WREG	Working register (accumulator).
x	Don't care ('0' or '1'). The assembler will generate code with x = 0. It is the recommended form of use for compatibility with all Microchip software tools.
z_s	7-bit offset value for Indirect Addressing of register files (source).
z_d	7-bit offset value for Indirect Addressing of register files (destination).
{ }	Optional argument.
[text]	Indicates an indexed address.
(text)	The contents of text.
[expr]<n>	Specifies bit n of the register indicated by the pointer expr.
→	Assigned to.
< >	Register bit field.
∈	In the set of.
italics	User-defined term (font is Courier).

© 2008 Microchip Technology Inc.

FIGURE 26-1: GENERAL FORMAT FOR INSTRUCTIONS

Byte-oriented file register operations — **Example Instruction**

15 – 10	9	8	7 – 0
OPCODE	d	a	f (FILE #)

`ADDWF MYREG, W, B`

d = 0 for result destination to be WREG register
d = 1 for result destination to be file register (f)
a = 0 to force Access Bank
a = 1 for BSR to select bank
f = 8-bit file register address

Byte to Byte move operations (2-word)

15 – 12	11 – 0
OPCODE	f (Source FILE #)
1111	f (Destination FILE #)

`MOVFF MYREG1, MYREG2`

f = 12-bit file register address

Bit-oriented file register operations

15 – 12	11 – 9	8	7 – 0
OPCODE	b (BIT #)	a	f (FILE #)

`BSF MYREG, bit, B`

b = 3-bit position of bit in file register (f)
a = 0 to force Access Bank
a = 1 for BSR to select bank
f = 8-bit file register address

Literal operations

15 – 8	7 – 0
OPCODE	k (literal)

`MOVLW 7Fh`

k = 8-bit immediate value

Control operations

CALL, GOTO and Branch operations

15 – 8	7 – 0
OPCODE	n<7:0> (literal)
1111	n<19:8> (literal)

`GOTO Label`

n = 20-bit immediate value

15 – 8	7	7 – 0
OPCODE	S	n<7:0> (literal)
1111		n<19:8> (literal)

`CALL MYFUNC`

S = Fast bit

15 – 11	10 – 0
OPCODE	n<10:0> (literal)

`BRA MYFUNC`

15 – 8	7 – 0
OPCODE	n<7:0> (literal)

`BC MYFUNC`

TABLE 26-2: PIC18FXXXX INSTRUCTION SET

Mnemonic, Operands		Description	Cycles	16-Bit Instruction Word MSb			LSb	Status Affected	Notes
BYTE-ORIENTED OPERATIONS									
ADDWF	f, d, a	Add WREG and f	1	0010	01da	ffff	ffff	C, DC, Z, OV, N	1, 2
ADDWFC	f, d, a	Add WREG and Carry bit to f	1	0010	00da	ffff	ffff	C, DC, Z, OV, N	1, 2
ANDWF	f, d, a	AND WREG with f	1	0001	01da	ffff	ffff	Z, N	1,2
CLRF	f, a	Clear f	1	0110	101a	ffff	ffff	Z	2
COMF	f, d, a	Complement f	1	0001	11da	ffff	ffff	Z, N	1, 2
CPFSEQ	f, a	Compare f with WREG, Skip =	1 (2 or 3)	0110	001a	ffff	ffff	None	4
CPFSGT	f, a	Compare f with WREG, Skip >	1 (2 or 3)	0110	010a	ffff	ffff	None	4
CPFSLT	f, a	Compare f with WREG, Skip <	1 (2 or 3)	0110	000a	ffff	ffff	None	1, 2
DECF	f, d, a	Decrement f	1	0000	01da	ffff	ffff	C, DC, Z, OV, N	1, 2, 3, 4
DECFSZ	f, d, a	Decrement f, Skip if 0	1 (2 or 3)	0010	11da	ffff	ffff	None	1, 2, 3, 4
DCFSNZ	f, d, a	Decrement f, Skip if Not 0	1 (2 or 3)	0100	11da	ffff	ffff	None	1, 2
INCF	f, d, a	Increment f	1	0010	10da	ffff	ffff	C, DC, Z, OV, N	1, 2, 3, 4
INCFSZ	f, d, a	Increment f, Skip if 0	1 (2 or 3)	0011	11da	ffff	ffff	None	4
INFSNZ	f, d, a	Increment f, Skip if Not 0	1 (2 or 3)	0100	10da	ffff	ffff	None	1, 2
IORWF	f, d, a	Inclusive OR WREG with f	1	0001	00da	ffff	ffff	Z, N	1, 2
MOVF	f, d, a	Move f	1	0101	00da	ffff	ffff	Z, N	1
MOVFF	f_s, f_d	Move f_s (source) to 1st word	2	1100	ffff	ffff	ffff	None	
		f_d (destination) 2nd word		1111	ffff	ffff	ffff		
MOVWF	f, a	Move WREG to f	1	0110	111a	ffff	ffff	None	
MULWF	f, a	Multiply WREG with f	1	0000	001a	ffff	ffff	None	1, 2
NEGF	f, a	Negate f	1	0110	110a	ffff	ffff	C, DC, Z, OV, N	
RLCF	f, d, a	Rotate Left f through Carry	1	0011	01da	ffff	ffff	C, Z, N	1, 2
RLNCF	f, d, a	Rotate Left f (No Carry)	1	0100	01da	ffff	ffff	Z, N	
RRCF	f, d, a	Rotate Right f through Carry	1	0011	00da	ffff	ffff	C, Z, N	
RRNCF	f, d, a	Rotate Right f (No Carry)	1	0100	00da	ffff	ffff	Z, N	
SETF	f, a	Set f	1	0110	100a	ffff	ffff	None	1, 2
SUBFWB	f, d, a	Subtract f from WREG with Borrow	1	0101	01da	ffff	ffff	C, DC, Z, OV, N	
SUBWF	f, d, a	Subtract WREG from f	1	0101	11da	ffff	ffff	C, DC, Z, OV, N	1, 2
SUBWFB	f, d, a	Subtract WREG from f with Borrow	1	0101	10da	ffff	ffff	C, DC, Z, OV, N	
SWAPF	f, d, a	Swap Nibbles in f	1	0011	10da	ffff	ffff	None	4
TSTFSZ	f, a	Test f, Skip if 0	1 (2 or 3)	0110	011a	ffff	ffff	None	1, 2
XORWF	f, d, a	Exclusive OR WREG with f	1	0001	10da	ffff	ffff	Z, N	

Note 1: When a PORT register is modified as a function of itself (e.g., `MOVF PORTB, 1, 0`), the value used will be that value present on the pins themselves. For example, if the data latch is '1' for a pin configured as input and is driven low by an external device, the data will be written back with a '0'.

2: If this instruction is executed on the TMR0 register (and where applicable, d = 1), the prescaler will be cleared if assigned.

3: If Program Counter (PC) is modified or a conditional test is true, the instruction requires two cycles. The second cycle is executed as a `NOP`.

4: Some instructions are two-word instructions. The second word of these instructions will be executed as a `NOP` unless the first word of the instruction retrieves the information embedded in these 16 bits. This ensures that all program memory locations have a valid instruction.

© 2008 Microchip Technology Inc.

TABLE 26-2: PIC18FXXXX INSTRUCTION SET (CONTINUED)

Mnemonic, Operands		Description	Cycles	16-Bit Instruction Word MSb			LSb	Status Affected	Notes
BIT-ORIENTED OPERATIONS									
BCF	f, b, a	Bit Clear f	1	1001	bbba	ffff	ffff	None	1, 2
BSF	f, b, a	Bit Set f	1	1000	bbba	ffff	ffff	None	1, 2
BTFSC	f, b, a	Bit Test f, Skip if Clear	1 (2 or 3)	1011	bbba	ffff	ffff	None	3, 4
BTFSS	f, b, a	Bit Test f, Skip if Set	1 (2 or 3)	1010	bbba	ffff	ffff	None	3, 4
BTG	f, b, a	Bit Toggle f	1	0111	bbba	ffff	ffff	None	1, 2
CONTROL OPERATIONS									
BC	n	Branch if Carry	1 (2)	1110	0010	nnnn	nnnn	None	
BN	n	Branch if Negative	1 (2)	1110	0110	nnnn	nnnn	None	
BNC	n	Branch if Not Carry	1 (2)	1110	0011	nnnn	nnnn	None	
BNN	n	Branch if Not Negative	1 (2)	1110	0111	nnnn	nnnn	None	
BNOV	n	Branch if Not Overflow	1 (2)	1110	0101	nnnn	nnnn	None	
BNZ	n	Branch if Not Zero	1 (2)	1110	0001	nnnn	nnnn	None	
BOV	n	Branch if Overflow	1 (2)	1110	0100	nnnn	nnnn	None	
BRA	n	Branch Unconditionally	2	1101	0nnn	nnnn	nnnn	None	
BZ	n	Branch if Zero	1 (2)	1110	0000	nnnn	nnnn	None	
CALL	n, s	Call Subroutine 1st word	2	1110	110s	kkkk	kkkk	None	
		2nd word		1111	kkkk	kkkk	kkkk		
CLRWDT	—	Clear Watchdog Timer	1	0000	0000	0000	0100	$\overline{TO}$, $\overline{PD}$	
DAW	—	Decimal Adjust WREG	1	0000	0000	0000	0111	C	
GOTO	n	Go to Address 1st word	2	1110	1111	kkkk	kkkk	None	
		2nd word		1111	kkkk	kkkk	kkkk		
NOP	—	No Operation	1	0000	0000	0000	0000	None	
NOP	—	No Operation	1	1111	xxxx	xxxx	xxxx	None	4
POP	—	Pop Top of Return Stack (TOS)	1	0000	0000	0000	0110	None	
PUSH	—	Push Top of Return Stack (TOS)	1	0000	0000	0000	0101	None	
RCALL	n	Relative Call	2	1101	1nnn	nnnn	nnnn	None	
RESET		Software Device Reset	1	0000	0000	1111	1111	All	
RETFIE	s	Return from Interrupt Enable	2	0000	0000	0001	000s	GIE/GIEH, PEIE/GIEL	
RETLW	k	Return with Literal in WREG	2	0000	1100	kkkk	kkkk	None	
RETURN	s	Return from Subroutine	2	0000	0000	0001	001s	None	
SLEEP	—	Go into Standby mode	1	0000	0000	0000	0011	$\overline{TO}$, $\overline{PD}$	

Note 1: When a PORT register is modified as a function of itself (e.g., `MOVF PORTB, 1, 0`), the value used will be that value present on the pins themselves. For example, if the data latch is ‘1’ for a pin configured as input and is driven low by an external device, the data will be written back with a ‘0’.

2: If this instruction is executed on the TMR0 register (and where applicable, d = 1), the prescaler will be cleared if assigned.

3: If Program Counter (PC) is modified or a conditional test is true, the instruction requires two cycles. The second cycle is executed as a `NOP`.

4: Some instructions are two-word instructions. The second word of these instructions will be executed as a `NOP` unless the first word of the instruction retrieves the information embedded in these 16 bits. This ensures that all program memory locations have a valid instruction.

TABLE 26-2: PIC18FXXXX INSTRUCTION SET (CONTINUED)

Mnemonic, Operands		Description	Cycles	16-Bit Instruction Word MSb			LSb	Status Affected	Notes
LITERAL OPERATIONS									
ADDLW	k	Add Literal and WREG	1	0000	1111	kkkk	kkkk	C, DC, Z, OV, N	
ANDLW	k	AND Literal with WREG	1	0000	1011	kkkk	kkkk	Z, N	
IORLW	k	Inclusive OR Literal with WREG	1	0000	1001	kkkk	kkkk	Z, N	
LFSR	f, k	Move Literal (12-bit) 2nd word	2	1110	1110	00ff	kkkk	None	
		to FSR(f) 1st word		1111	0000	kkkk	kkkk		
MOVLB	k	Move Literal to BSR<3:0>	1	0000	0001	0000	kkkk	None	
MOVLW	k	Move Literal to WREG	1	0000	1110	kkkk	kkkk	None	
MULLW	k	Multiply Literal with WREG	1	0000	1101	kkkk	kkkk	None	
RETLW	k	Return with Literal in WREG	2	0000	1100	kkkk	kkkk	None	
SUBLW	k	Subtract WREG from Literal	1	0000	1000	kkkk	kkkk	C, DC, Z, OV, N	
XORLW	k	Exclusive OR Literal with WREG	1	0000	1010	kkkk	kkkk	Z, N	
DATA MEMORY ↔ PROGRAM MEMORY OPERATIONS									
TBLRD*		Table Read	2	0000	0000	0000	1000	None	
TBLRD*+		Table Read with Post-Increment		0000	0000	0000	1001	None	
TBLRD*-		Table Read with Post-Decrement		0000	0000	0000	1010	None	
TBLRD+*		Table Read with Pre-Increment		0000	0000	0000	1011	None	
TBLWT*		Table Write	2	0000	0000	0000	1100	None	5
TBLWT*+		Table Write with Post-Increment		0000	0000	0000	1101	None	5
TBLWT*-		Table Write with Post-Decrement		0000	0000	0000	1110	None	5
TBLWT+*		Table Write with Pre-Increment		0000	0000	0000	1111	None	5

Note 1: When a PORT register is modified as a function of itself (e.g., `MOVF PORTB, 1, 0`), the value used will be that value present on the pins themselves. For example, if the data latch is '1' for a pin configured as input and is driven low by an external device, the data will be written back with a '0'.

2: If this instruction is executed on the TMR0 register (and where applicable, d = 1), the prescaler will be cleared if assigned.

3: If Program Counter (PC) is modified or a conditional test is true, the instruction requires two cycles. The second cycle is executed as a `NOP`.

4: Some instructions are two-word instructions. The second word of these instructions will be executed as a `NOP` unless the first word of the instruction retrieves the information embedded in these 16 bits. This ensures that all program memory locations have a valid instruction.

© 2008 Microchip Technology Inc.

26.1.1 STANDARD INSTRUCTION SET

ADDLW	ADD Literal to W
Syntax:	ADDLW k
Operands:	$0 \le k \le 255$
Operation:	(W) + k → W
Status Affected:	N, OV, C, DC, Z
Encoding:	0000 | 1111 | kkkk | kkkk
Description:	The contents of W are added to the 8-bit literal 'k' and the result is placed in W.
Words:	1
Cycles:	1

Q Cycle Activity:

Q1	Q2	Q3	Q4
Decode	Read literal 'k'	Process Data	Write to W

Example: `ADDLW 15h`

Before Instruction
W = 10h
After Instruction
W = 25h

ADDWF	ADD W to f
Syntax:	ADDWF f {,d {,a}}
Operands:	$0 \le f \le 255$ $d \in [0,1]$ $a \in [0,1]$
Operation:	(W) + (f) → dest
Status Affected:	N, OV, C, DC, Z
Encoding:	0010 | 01da | ffff | ffff
Description:	Add W to register 'f'. If 'd' is '0', the result is stored in W. If 'd' is '1', the result is stored back in register 'f' (default). If 'a' is '0', the Access Bank is selected. If 'a' is '1', the BSR is used to select the GPR bank (default). If 'a' is '0' and the extended instruction set is enabled, this instruction operates in Indexed Literal Offset Addressing mode whenever $f \le 95$ (5Fh). See **Section 26.2.3 "Byte-Oriented and Bit-Oriented Instructions in Indexed Literal Offset Mode"** for details.
Words:	1
Cycles:	1

Q Cycle Activity:

Q1	Q2	Q3	Q4
Decode	Read register 'f'	Process Data	Write to destination

Example: `ADDWF REG, 0, 0`

Before Instruction
W = 17h
REG = 0C2h
After Instruction
W = 0D9h
REG = 0C2h

Note: All PIC18 instructions may take an optional label argument preceding the instruction mnemonic for use in symbolic addressing. If a label is used, the instruction format then becomes: {label} instruction argument(s).

ADDWFC — **ADD W and Carry bit to f**

Syntax:	ADDWFC f {,d {,a}}
Operands:	$0 \le f \le 255$ $d \in [0,1]$ $a \in [0,1]$
Operation:	(W) + (f) + (C) → dest
Status Affected:	N,OV, C, DC, Z
Encoding:	0010 | 00da | ffff | ffff
Description:	Add W, the Carry flag and data memory location 'f'. If 'd' is '0', the result is placed in W. If 'd' is '1', the result is placed in data memory location 'f'. If 'a' is '0', the Access Bank is selected. If 'a' is '1', the BSR is used to select the GPR bank (default). If 'a' is '0' and the extended instruction set is enabled, this instruction operates in Indexed Literal Offset Addressing mode whenever $f \le 95$ (5Fh). See **Section 26.2.3 "Byte-Oriented and Bit-Oriented Instructions in Indexed Literal Offset Mode"** for details.
Words:	1
Cycles:	1

Q Cycle Activity:

Q1	Q2	Q3	Q4
Decode	Read register 'f'	Process Data	Write to destination

Example: `ADDWFC REG, 0, 1`

Before Instruction
- Carry bit = 1
- REG = 02h
- W = 4Dh

After Instruction
- Carry bit = 0
- REG = 02h
- W = 50h

ANDLW — **AND Literal with W**

Syntax:	ANDLW k
Operands:	$0 \le k \le 255$
Operation:	(W) .AND. k → W
Status Affected:	N, Z
Encoding:	0000 | 1011 | kkkk | kkkk
Description:	The contents of W are ANDed with the 8-bit literal 'k'. The result is placed in W.
Words:	1
Cycles:	1

Q Cycle Activity:

Q1	Q2	Q3	Q4
Decode	Read literal 'k'	Process Data	Write to W

Example: `ANDLW 05Fh`

Before Instruction
- W = A3h

After Instruction
- W = 03h

© 2008 Microchip Technology Inc.

ANDWF	AND W with f
Syntax:	ANDWF f {,d {,a}}
Operands:	$0 \le f \le 255$ $d \in [0,1]$ $a \in [0,1]$
Operation:	(W) .AND. (f) → dest
Status Affected:	N, Z
Encoding:	0001 | 01da | ffff | ffff
Description:	The contents of W are ANDed with register 'f'. If 'd' is '0', the result is stored in W. If 'd' is '1', the result is stored back in register 'f' (default). If 'a' is '0', the Access Bank is selected. If 'a' is '1', the BSR is used to select the GPR bank (default). If 'a' is '0' and the extended instruction set is enabled, this instruction operates in Indexed Literal Offset Addressing mode whenever $f \le 95$ (5Fh). See **Section 26.2.3 "Byte-Oriented and Bit-Oriented Instructions in Indexed Literal Offset Mode"** for details.
Words:	1
Cycles:	1

Q Cycle Activity:

Q1	Q2	Q3	Q4
Decode	Read register 'f'	Process Data	Write to destination

Example: `ANDWF REG, 0, 0`

Before Instruction
W = 17h
REG = C2h
After Instruction
W = 02h
REG = C2h

BC	Branch if Carry
Syntax:	BC n
Operands:	$-128 \le n \le 127$
Operation:	if Carry bit is '1' (PC) + 2 + 2n → PC
Status Affected:	None
Encoding:	1110 | 0010 | nnnn | nnnn
Description:	If the Carry bit is '1', then the program will branch. The 2's complement number '2n' is added to the PC. Since the PC will have incremented to fetch the next instruction, the new address will be PC + 2 + 2n. This instruction is then a two-cycle instruction.
Words:	1
Cycles:	1(2)

Q Cycle Activity:
If Jump:

Q1	Q2	Q3	Q4
Decode	Read literal 'n'	Process Data	Write to PC
No operation	No operation	No operation	No operation

If No Jump:

Q1	Q2	Q3	Q4
Decode	Read literal 'n'	Process Data	No operation

Example: `HERE BC 5`

Before Instruction
PC = address (HERE)
After Instruction
If Carry = 1;
PC = address (HERE + 12)
If Carry = 0;
PC = address (HERE + 2)

BCF — Bit Clear f

Syntax:	BCF f, b {,a}
Operands:	$0 \le f \le 255$ $0 \le b \le 7$ $a \in [0,1]$
Operation:	$0 \rightarrow f<b>$
Status Affected:	None
Encoding:	1001 | bbba | ffff | ffff
Description:	Bit ‘b’ in register ‘f’ is cleared. If ‘a’ is ‘0’, the Access Bank is selected. If ‘a’ is ‘1’, the BSR is used to select the GPR bank (default). If ‘a’ is ‘0’ and the extended instruction set is enabled, this instruction operates in Indexed Literal Offset Addressing mode whenever $f \le 95$ (5Fh). See **Section 26.2.3 “Byte-Oriented and Bit-Oriented Instructions in Indexed Literal Offset Mode”** for details.
Words:	1
Cycles:	1

Q Cycle Activity:

Q1	Q2	Q3	Q4
Decode	Read register ‘f’	Process Data	Write register ‘f’

Example: `BCF FLAG_REG, 7, 0`

Before Instruction
FLAG_REG = C7h
After Instruction
FLAG_REG = 47h

BN — Branch if Negative

Syntax:	BN n
Operands:	$-128 \le n \le 127$
Operation:	if Negative bit is ‘1’ $(PC) + 2 + 2n \rightarrow PC$
Status Affected:	None
Encoding:	1110 | 0110 | nnnn | nnnn
Description:	If the Negative bit is ‘1’, then the program will branch. The 2’s complement number ‘2n’ is added to the PC. Since the PC will have incremented to fetch the next instruction, the new address will be PC + 2 + 2n. This instruction is then a two-cycle instruction.
Words:	1
Cycles:	1(2)

Q Cycle Activity:
If Jump:

Q1	Q2	Q3	Q4
Decode	Read literal ‘n’	Process Data	Write to PC
No operation	No operation	No operation	No operation

If No Jump:

Q1	Q2	Q3	Q4
Decode	Read literal ‘n’	Process Data	No operation

Example: `HERE BN Jump`

Before Instruction
PC = address (HERE)
After Instruction
If Negative = 1;
PC = address (Jump)
If Negative = 0;
PC = address (HERE + 2)

© 2008 Microchip Technology Inc.

BNC	Branch if Not Carry
Syntax:	BNC n
Operands:	-128 ≤ n ≤ 127
Operation:	if Carry bit is '0' (PC) + 2 + 2n → PC
Status Affected:	None
Encoding:	1110 | 0011 | nnnn | nnnn
Description:	If the Carry bit is '0', then the program will branch. The 2's complement number '2n' is added to the PC. Since the PC will have incremented to fetch the next instruction, the new address will be PC + 2 + 2n. This instruction is then a two-cycle instruction.
Words:	1
Cycles:	1(2)

Q Cycle Activity:

If Jump:

Q1	Q2	Q3	Q4
Decode	Read literal 'n'	Process Data	Write to PC
No operation	No operation	No operation	No operation

If No Jump:

Q1	Q2	Q3	Q4
Decode	Read literal 'n'	Process Data	No operation

Example: `HERE BNC Jump`

Before Instruction
PC = address (HERE)
After Instruction
If Carry = 0;
PC = address (Jump)
If Carry = 1;
PC = address (HERE + 2)

BNN	Branch if Not Negative
Syntax:	BNN n
Operands:	-128 ≤ n ≤ 127
Operation:	if Negative bit is '0' (PC) + 2 + 2n → PC
Status Affected:	None
Encoding:	1110 | 0111 | nnnn | nnnn
Description:	If the Negative bit is '0', then the program will branch. The 2's complement number '2n' is added to the PC. Since the PC will have incremented to fetch the next instruction, the new address will be PC + 2 + 2n. This instruction is then a two-cycle instruction.
Words:	1
Cycles:	1(2)

Q Cycle Activity:

If Jump:

Q1	Q2	Q3	Q4
Decode	Read literal 'n'	Process Data	Write to PC
No operation	No operation	No operation	No operation

If No Jump:

Q1	Q2	Q3	Q4
Decode	Read literal 'n'	Process Data	No operation

Example: `HERE BNN Jump`

Before Instruction
PC = address (HERE)
After Instruction
If Negative = 0;
PC = address (Jump)
If Negative = 1;
PC = address (HERE + 2)

BNOV	Branch if Not Overflow
Syntax:	BNOV n
Operands:	-128 ≤ n ≤ 127
Operation:	if Overflow bit is '0' (PC) + 2 + 2n → PC
Status Affected:	None
Encoding:	1110 | 0101 | nnnn | nnnn
Description:	If the Overflow bit is '0', then the program will branch. The 2's complement number '2n' is added to the PC. Since the PC will have incremented to fetch the next instruction, the new address will be PC + 2 + 2n. This instruction is then a two-cycle instruction.
Words:	1
Cycles:	1(2)

Q Cycle Activity:
If Jump:

Q1	Q2	Q3	Q4
Decode	Read literal 'n'	Process Data	Write to PC
No operation	No operation	No operation	No operation

If No Jump:

Q1	Q2	Q3	Q4
Decode	Read literal 'n'	Process Data	No operation

Example: `HERE BNOV Jump`

```
Before Instruction
    PC          =   address (HERE)
After Instruction
    If Overflow =   0;
        PC      =   address (Jump)
    If Overflow =   1;
        PC      =   address (HERE + 2)
```

BNZ	Branch if Not Zero
Syntax:	BNZ n
Operands:	-128 ≤ n ≤ 127
Operation:	if Zero bit is '0' (PC) + 2 + 2n → PC
Status Affected:	None
Encoding:	1110 | 0001 | nnnn | nnnn
Description:	If the Zero bit is '0', then the program will branch. The 2's complement number '2n' is added to the PC. Since the PC will have incremented to fetch the next instruction, the new address will be PC + 2 + 2n. This instruction is then a two-cycle instruction.
Words:	1
Cycles:	1(2)

Q Cycle Activity:
If Jump:

Q1	Q2	Q3	Q4
Decode	Read literal 'n'	Process Data	Write to PC
No operation	No operation	No operation	No operation

If No Jump:

Q1	Q2	Q3	Q4
Decode	Read literal 'n'	Process Data	No operation

Example: `HERE BNZ Jump`

```
Before Instruction
    PC          =   address (HERE)
After Instruction
    If Zero     =   0;
        PC      =   address (Jump)
    If Zero     =   1;
        PC      =   address (HERE + 2)
```


© 2008 Microchip Technology Inc.

BRA	Unconditional Branch
Syntax:	BRA n
Operands:	$-1024 \le n \le 1023$
Operation:	(PC) + 2 + 2n → PC
Status Affected:	None
Encoding:	1101 | 0nnn | nnnn | nnnn
Description:	Add the 2's complement number '2n' to the PC. Since the PC will have incremented to fetch the next instruction, the new address will be PC + 2 + 2n. This instruction is a two-cycle instruction.
Words:	1
Cycles:	2

Q Cycle Activity:

Q1	Q2	Q3	Q4
Decode	Read literal 'n'	Process Data	Write to PC
No operation	No operation	No operation	No operation

Example: `HERE BRA Jump`

Before Instruction
PC = address (HERE)
After Instruction
PC = address (Jump)

BSF	Bit Set f
Syntax:	BSF f, b {,a}
Operands:	$0 \le f \le 255$ $0 \le b \le 7$ $a \in [0,1]$
Operation:	1 → f<b>
Status Affected:	None
Encoding:	1000 | bbba | ffff | ffff
Description:	Bit 'b' in register 'f' is set. If 'a' is '0', the Access Bank is selected. If 'a' is '1', the BSR is used to select the GPR bank (default). If 'a' is '0' and the extended instruction set is enabled, this instruction operates in Indexed Literal Offset Addressing mode whenever $f \le 95$ (5Fh). See **Section 26.2.3 "Byte-Oriented and Bit-Oriented Instructions in Indexed Literal Offset Mode"** for details.
Words:	1
Cycles:	1

Q Cycle Activity:

Q1	Q2	Q3	Q4
Decode	Read register 'f'	Process Data	Write register 'f'

Example: `BSF FLAG_REG, 7, 1`

Before Instruction
FLAG_REG = 0Ah
After Instruction
FLAG_REG = 8Ah

BTFSC	Bit Test File, Skip if Clear
Syntax:	BTFSC f, b {,a}
Operands:	$0 \le f \le 255$ $0 \le b \le 7$ $a \in [0,1]$
Operation:	skip if (f<b>) = 0
Status Affected:	None
Encoding:	1011 | bbba | ffff | ffff
Description:	If bit 'b' in register 'f' is '0', then the next instruction is skipped. If bit 'b' is '0', then the next instruction fetched during the current instruction execution is discarded and a NOP is executed instead, making this a two-cycle instruction. If 'a' is '0', the Access Bank is selected. If 'a' is '1', the BSR is used to select the GPR bank (default). If 'a' is '0' and the extended instruction set is enabled, this instruction operates in Indexed Literal Offset Addressing mode whenever $f \le 95$ (5Fh). See **Section 26.2.3 "Byte-Oriented and Bit-Oriented Instructions in Indexed Literal Offset Mode"** for details.
Words:	1
Cycles:	1(2) **Note:** 3 cycles if skip and followed by a 2-word instruction.

Q Cycle Activity:

Q1	Q2	Q3	Q4
Decode	Read register 'f'	Process Data	No operation

If skip:

Q1	Q2	Q3	Q4
No operation	No operation	No operation	No operation

If skip and followed by 2-word instruction:

Q1	Q2	Q3	Q4
No operation	No operation	No operation	No operation
No operation	No operation	No operation	No operation

Example:

```
HERE    BTFSC   FLAG, 1, 0
FALSE   :
TRUE    :
```

Before Instruction
PC = address (HERE)
After Instruction
If FLAG<1> = 0;
PC = address (TRUE)
If FLAG<1> = 1;
PC = address (FALSE)

BTFSS	Bit Test File, Skip if Set
Syntax:	BTFSS f, b {,a}
Operands:	$0 \le f \le 255$ $0 \le b < 7$ $a \in [0,1]$
Operation:	skip if (f<b>) = 1
Status Affected:	None
Encoding:	1010 | bbba | ffff | ffff
Description:	If bit 'b' in register 'f' is '1', then the next instruction is skipped. If bit 'b' is '1', then the next instruction fetched during the current instruction execution is discarded and a NOP is executed instead, making this a two-cycle instruction. If 'a' is '0', the Access Bank is selected. If 'a' is '1', the BSR is used to select the GPR bank (default). If 'a' is '0' and the extended instruction set is enabled, this instruction operates in Indexed Literal Offset Addressing mode whenever $f \le 95$ (5Fh). See **Section 26.2.3 "Byte-Oriented and Bit-Oriented Instructions in Indexed Literal Offset Mode"** for details.
Words:	1
Cycles:	1(2) **Note:** 3 cycles if skip and followed by a 2-word instruction.

Q Cycle Activity:

Q1	Q2	Q3	Q4
Decode	Read register 'f'	Process Data	No operation

If skip:

Q1	Q2	Q3	Q4
No operation	No operation	No operation	No operation

If skip and followed by 2-word instruction:

Q1	Q2	Q3	Q4
No operation	No operation	No operation	No operation
No operation	No operation	No operation	No operation

Example:

```
HERE    BTFSS   FLAG, 1, 0
FALSE   :
TRUE    :
```

Before Instruction
PC = address (HERE)
After Instruction
If FLAG<1> = 0;
PC = address (FALSE)
If FLAG<1> = 1;
PC = address (TRUE)

© 2008 Microchip Technology Inc.

BTG — Bit Toggle f

Syntax:	BTG f, b {,a}
Operands:	$0 \le f \le 255$ $0 \le b < 7$ $a \in [0,1]$
Operation:	$(\overline{f<b>}) \rightarrow f<b>$
Status Affected:	None
Encoding:	0111 bbba ffff ffff
Description:	Bit 'b' in data memory location 'f' is inverted. If 'a' is '0', the Access Bank is selected. If 'a' is '1', the BSR is used to select the GPR bank (default). If 'a' is '0' and the extended instruction set is enabled, this instruction operates in Indexed Literal Offset Addressing mode whenever $f \le 95$ (5Fh). See **Section 26.2.3 "Byte-Oriented and Bit-Oriented Instructions in Indexed Literal Offset Mode"** for details.
Words:	1
Cycles:	1

Q Cycle Activity:

Q1	Q2	Q3	Q4
Decode	Read register 'f'	Process Data	Write register 'f'

Example: `BTG PORTC, 4, 0`

Before Instruction:
PORTC = 0111 0101 [75h]
After Instruction:
PORTC = 0110 0101 [65h]

BOV — Branch if Overflow

Syntax:	BOV n
Operands:	$-128 \le n \le 127$
Operation:	if Overflow bit is '1' $(PC) + 2 + 2n \rightarrow PC$
Status Affected:	None
Encoding:	1110 0100 nnnn nnnn
Description:	If the Overflow bit is '1', then the program will branch. The 2's complement number '2n' is added to the PC. Since the PC will have incremented to fetch the next instruction, the new address will be PC + 2 + 2n. This instruction is then a two-cycle instruction.
Words:	1
Cycles:	1(2)

Q Cycle Activity:
If Jump:

Q1	Q2	Q3	Q4
Decode	Read literal 'n'	Process Data	Write to PC
No operation	No operation	No operation	No operation

If No Jump:

Q1	Q2	Q3	Q4
Decode	Read literal 'n'	Process Data	No operation

Example: `HERE BOV Jump`

Before Instruction
PC = address (HERE)
After Instruction
If Overflow = 1;
PC = address (Jump)
If Overflow = 0;
PC = address (HERE + 2)

BZ	Branch if Zero
Syntax:	BZ n
Operands:	-128 ≤ n ≤ 127
Operation:	if Zero bit is '1' (PC) + 2 + 2n → PC
Status Affected:	None
Encoding:	1110 | 0000 | nnnn | nnnn
Description:	If the Zero bit is '1', then the program will branch. The 2's complement number '2n' is added to the PC. Since the PC will have incremented to fetch the next instruction, the new address will be PC + 2 + 2n. This instruction is then a two-cycle instruction.
Words:	1
Cycles:	1(2)

Q Cycle Activity:
If Jump:

Q1	Q2	Q3	Q4
Decode	Read literal 'n'	Process Data	Write to PC
No operation	No operation	No operation	No operation

If No Jump:

Q1	Q2	Q3	Q4
Decode	Read literal 'n'	Process Data	No operation

Example: `HERE BZ Jump`

Before Instruction
PC = address (HERE)
After Instruction
If Zero = 1;
PC = address (Jump)
If Zero = 0;
PC = address (HERE + 2)

CALL	Subroutine Call
Syntax:	CALL k {,s}
Operands:	0 ≤ k ≤ 1048575 s ∈ [0,1]
Operation:	(PC) + 4 → TOS, k → PC<20:1>, if s = 1 (W) → WS, (STATUS) → STATUSS, (BSR) → BSRS
Status Affected:	None
Encoding: 1st word (k<7:0>) 2nd word(k<19:8>)	1110 | 110s | k7kkk | kkkk0 1111 | k19kkk | kkkk | kkkk8
Description:	Subroutine call of entire 2-Mbyte memory range. First, return address (PC + 4) is pushed onto the return stack. If 's' = 1, the W, STATUS and BSR registers are also pushed into their respective shadow registers, WS, STATUSS and BSRS. If 's' = 0, no update occurs (default). Then, the 20-bit value 'k' is loaded into PC<20:1>. CALL is a two-cycle instruction.
Words:	2
Cycles:	2

Q Cycle Activity:

Q1	Q2	Q3	Q4
Decode	Read literal 'k'<7:0>,	Push PC to stack	Read literal 'k'<19:8>, Write to PC
No operation	No operation	No operation	No operation

Example: `HERE CALL THERE,1`

Before Instruction
PC = address (HERE)
After Instruction
PC = address (THERE)
TOS = address (HERE + 4)
WS = W
BSRS = BSR
STATUSS = STATUS

© 2008 Microchip Technology Inc.

CLRF	Clear f
Syntax:	CLRF f {,a}
Operands:	$0 \le f \le 255$ $a \in [0,1]$
Operation:	000h → f 1 → Z
Status Affected:	Z
Encoding:	0110 | 101a | ffff | ffff
Description:	Clears the contents of the specified register. If 'a' is '0', the Access Bank is selected. If 'a' is '1', the BSR is used to select the GPR bank (default). If 'a' is '0' and the extended instruction set is enabled, this instruction operates in Indexed Literal Offset Addressing mode whenever $f \le 95$ (5Fh). See **Section 26.2.3 "Byte-Oriented and Bit-Oriented Instructions in Indexed Literal Offset Mode"** for details.
Words:	1
Cycles:	1

Q Cycle Activity:

Q1	Q2	Q3	Q4
Decode	Read register 'f'	Process Data	Write register 'f'

Example: `CLRF FLAG_REG,1`

Before Instruction
FLAG_REG = 5Ah
After Instruction
FLAG_REG = 00h

CLRWDT	Clear Watchdog Timer
Syntax:	CLRWDT
Operands:	None
Operation:	000h → WDT, 000h → WDT postscaler, 1 → $\overline{TO}$, 1 → $\overline{PD}$
Status Affected:	$\overline{TO}$, $\overline{PD}$
Encoding:	0000 | 0000 | 0000 | 0100
Description:	CLRWDT instruction resets the Watchdog Timer. It also resets the post-scaler of the WDT. Status bits, $\overline{TO}$ and $\overline{PD}$, are set.
Words:	1
Cycles:	1

Q Cycle Activity:

Q1	Q2	Q3	Q4
Decode	No operation	Process Data	No operation

Example: `CLRWDT`

Before Instruction
WDT Counter = ?
After Instruction
WDT Counter = 00h
WDT Postscaler = 0
$\overline{TO}$ = 1
$\overline{PD}$ = 1

COMF	Complement f
Syntax:	COMF f {,d {,a}}
Operands:	$0 \le f \le 255$ $d \in [0,1]$ $a \in [0,1]$
Operation:	$(\overline{f}) \rightarrow$ dest
Status Affected:	N, Z
Encoding:	0001 | 11da | ffff | ffff
Description:	The contents of register 'f' are complemented. If 'd' is '0', the result is stored in W. If 'd' is '1', the result is stored back in register 'f' (default). If 'a' is '0', the Access Bank is selected. If 'a' is '1', the BSR is used to select the GPR bank (default). If 'a' is '0' and the extended instruction set is enabled, this instruction operates in Indexed Literal Offset Addressing mode whenever $f \le 95$ (5Fh). See **Section 26.2.3 "Byte-Oriented and Bit-Oriented Instructions in Indexed Literal Offset Mode"** for details.
Words:	1
Cycles:	1

Q Cycle Activity:

Q1	Q2	Q3	Q4
Decode	Read register 'f'	Process Data	Write to destination

Example: `COMF REG, 0, 0`

Before Instruction
REG = 13h
After Instruction
REG = 13h
W = ECh

CPFSEQ	Compare f with W, Skip if f = W
Syntax:	CPFSEQ f {,a}
Operands:	$0 \le f \le 255$ $a \in [0,1]$
Operation:	(f) – (W), skip if (f) = (W) (unsigned comparison)
Status Affected:	None
Encoding:	0110 | 001a | ffff | ffff
Description:	Compares the contents of data memory location 'f' to the contents of W by performing an unsigned subtraction. If 'f' = W, then the fetched instruction is discarded and a NOP is executed instead, making this a two-cycle instruction. If 'a' is '0', the Access Bank is selected. If 'a' is '1', the BSR is used to select the GPR bank (default). If 'a' is '0' and the extended instruction set is enabled, this instruction operates in Indexed Literal Offset Addressing mode whenever $f \le 95$ (5Fh). See **Section 26.2.3 "Byte-Oriented and Bit-Oriented Instructions in Indexed Literal Offset Mode"** for details.
Words:	1
Cycles:	1(2) **Note:** 3 cycles if skip and followed by a 2-word instruction.

Q Cycle Activity:

Q1	Q2	Q3	Q4
Decode	Read register 'f'	Process Data	No operation

If skip:

Q1	Q2	Q3	Q4
No operation	No operation	No operation	No operation

If skip and followed by 2-word instruction:

Q1	Q2	Q3	Q4
No operation	No operation	No operation	No operation
No operation	No operation	No operation	No operation

Example:
```
HERE     CPFSEQ REG, 0
NEQUAL   :
EQUAL    :
```

Before Instruction
PC Address = HERE
W = ?
REG = ?
After Instruction
If REG = W;
PC = Address (EQUAL)
If REG ≠ W;
PC = Address (NEQUAL)

© 2008 Microchip Technology Inc.

CPFSGT — Compare f with W, Skip if f > W

Syntax:	CPFSGT f {,a}
Operands:	$0 \le f \le 255$ $a \in [0,1]$
Operation:	(f) – (W), skip if (f) > (W) (unsigned comparison)
Status Affected:	None
Encoding:	0110 | 010a | ffff | ffff
Description:	Compares the contents of data memory location 'f' to the contents of the W by performing an unsigned subtraction. If the contents of 'f' are greater than the contents of WREG, then the fetched instruction is discarded and a NOP is executed instead, making this a two-cycle instruction. If 'a' is '0', the Access Bank is selected. If 'a' is '1', the BSR is used to select the GPR bank (default). If 'a' is '0' and the extended instruction set is enabled, this instruction operates in Indexed Literal Offset Addressing mode whenever $f \le 95$ (5Fh). See **Section 26.2.3 "Byte-Oriented and Bit-Oriented Instructions in Indexed Literal Offset Mode"** for details.
Words:	1
Cycles:	1(2) **Note:** 3 cycles if skip and followed by a 2-word instruction.

Q Cycle Activity:

Q1	Q2	Q3	Q4
Decode	Read register 'f'	Process Data	No operation

If skip:

Q1	Q2	Q3	Q4
No operation	No operation	No operation	No operation

If skip and followed by 2-word instruction:

Q1	Q2	Q3	Q4
No operation	No operation	No operation	No operation
No operation	No operation	No operation	No operation

Example:

```
HERE       CPFSGT REG, 0
NGREATER   :
GREATER    :
```

Before Instruction
PC = Address (HERE)
W = ?
After Instruction
If REG > W;
PC = Address (GREATER)
If REG ≤ W;
PC = Address (NGREATER)

CPFSLT — Compare f with W, Skip if f < W

Syntax:	CPFSLT f {,a}
Operands:	$0 \le f \le 255$ $a \in [0,1]$
Operation:	(f) – (W), skip if (f) < (W) (unsigned comparison)
Status Affected:	None
Encoding:	0110 | 000a | ffff | ffff
Description:	Compares the contents of data memory location 'f' to the contents of W by performing an unsigned subtraction. If the contents of 'f' are less than the contents of W, then the fetched instruction is discarded and a NOP is executed instead, making this a two-cycle instruction. If 'a' is '0', the Access Bank is selected. If 'a' is '1', the BSR is used to select the GPR bank (default).
Words:	1
Cycles:	1(2) **Note:** 3 cycles if skip and followed by a 2-word instruction.

Q Cycle Activity:

Q1	Q2	Q3	Q4
Decode	Read register 'f'	Process Data	No operation

If skip:

Q1	Q2	Q3	Q4
No operation	No operation	No operation	No operation

If skip and followed by 2-word instruction:

Q1	Q2	Q3	Q4
No operation	No operation	No operation	No operation
No operation	No operation	No operation	No operation

Example:

```
HERE     CPFSLT REG, 1
NLESS    :
LESS     :
```

Before Instruction
PC = Address (HERE)
W = ?
After Instruction
If REG < W;
PC = Address (LESS)
If REG ≥ W;
PC = Address (NLESS)

DAW — Decimal Adjust W Register

Syntax:	DAW
Operands:	None

Operation:	If [W<3:0> > 9] or [DC = 1] then
	(W<3:0>) + 6 → W<3:0>;
	else
	(W<3:0>) → W<3:0>
	
	If [W<7:4> > 9] or [C = 1] then
	(W<7:4>) + 6 → W<7:4>;
	C = 1;
	else
	(W<7:4>) → W<7:4>

Status Affected:	C
Encoding:	0000 | 0000 | 0000 | 0111
Description:	DAW adjusts the eight-bit value in W, resulting from the earlier addition of two variables (each in packed BCD format) and produces a correct packed BCD result.
Words:	1
Cycles:	1

Q Cycle Activity:

Q1	Q2	Q3	Q4
Decode	Read register W	Process Data	Write W

Example 1: DAW

Before Instruction
W = A5h
C = 0
DC = 0
After Instruction
W = 05h
C = 1
DC = 0

Example 2:

Before Instruction
W = CEh
C = 0
DC = 0
After Instruction
W = 34h
C = 1
DC = 0

DECF — Decrement f

Syntax:	DECF f {,d {,a}}
Operands:	$0 \le f \le 255$ $d \in [0,1]$ $a \in [0,1]$
Operation:	(f) – 1 → dest
Status Affected:	C, DC, N, OV, Z
Encoding:	0000 | 01da | ffff | ffff
Description:	Decrement register ‘f’. If ‘d’ is ‘0’, the result is stored in W. If ‘d’ is ‘1’, the result is stored back in register ‘f’ (default). If ‘a’ is ‘0’, the Access Bank is selected. If ‘a’ is ‘1’, the BSR is used to select the GPR bank (default). If ‘a’ is ‘0’ and the extended instruction set is enabled, this instruction operates in Indexed Literal Offset Addressing mode whenever $f \le 95$ (5Fh). See **Section 26.2.3 “Byte-Oriented and Bit-Oriented Instructions in Indexed Literal Offset Mode”** for details.
Words:	1
Cycles:	1

Q Cycle Activity:

Q1	Q2	Q3	Q4
Decode	Read register ‘f’	Process Data	Write to destination

Example: DECF CNT, 1, 0

Before Instruction
CNT = 01h
Z = 0
After Instruction
CNT = 00h
Z = 1

© 2008 Microchip Technology Inc.

DECFSZ — Decrement f, Skip if 0

Syntax:	DECFSZ f {,d {,a}}
Operands:	$0 \le f \le 255$ $d \in [0,1]$ $a \in [0,1]$
Operation:	(f) – 1 → dest, skip if result = 0
Status Affected:	None
Encoding:	0010 | 11da | ffff | ffff
Description:	The contents of register ‘f’ are decremented. If ‘d’ is ‘0’, the result is placed in W. If ‘d’ is ‘1’, the result is placed back in register ‘f’ (default). If the result is ‘0’, the next instruction which is already fetched is discarded and a NOP is executed instead, making it a two-cycle instruction. If ‘a’ is ‘0’, the Access Bank is selected. If ‘a’ is ‘1’, the BSR is used to select the GPR bank (default). If ‘a’ is ‘0’ and the extended instruction set is enabled, this instruction operates in Indexed Literal Offset Addressing mode whenever $f \le 95$ (5Fh). See **Section 26.2.3 “Byte-Oriented and Bit-Oriented Instructions in Indexed Literal Offset Mode”** for details.
Words:	1
Cycles:	1(2) **Note:** 3 cycles if skip and followed by a 2-word instruction.

Q Cycle Activity:

Q1	Q2	Q3	Q4
Decode	Read register ‘f’	Process Data	Write to destination

If skip:

Q1	Q2	Q3	Q4
No operation	No operation	No operation	No operation

If skip and followed by 2-word instruction:

Q1	Q2	Q3	Q4
No operation	No operation	No operation	No operation
No operation	No operation	No operation	No operation

Example:

```
HERE      DECFSZ   CNT, 1, 1
          GOTO     LOOP
CONTINUE
```

Before Instruction
PC = Address (HERE)
After Instruction
CNT = CNT – 1
If CNT = 0;
PC = Address (CONTINUE)
If CNT ≠ 0;
PC = Address (HERE + 2)

DCFSNZ — Decrement f, Skip if not 0

Syntax:	DCFSNZ f {,d {,a}}
Operands:	$0 \le f \le 255$ $d \in [0,1]$ $a \in [0,1]$
Operation:	(f) – 1 → dest, skip if result ≠ 0
Status Affected:	None
Encoding:	0100 | 11da | ffff | ffff
Description:	The contents of register ‘f’ are decremented. If ‘d’ is ‘0’, the result is placed in W. If ‘d’ is ‘1’, the result is placed back in register ‘f’ (default). If the result is not ‘0’, the next instruction which is already fetched is discarded and a NOP is executed instead, making it a two-cycle instruction. If ‘a’ is ‘0’, the Access Bank is selected. If ‘a’ is ‘1’, the BSR is used to select the GPR bank (default). If ‘a’ is ‘0’ and the extended instruction set is enabled, this instruction operates in Indexed Literal Offset Addressing mode whenever $f \le 95$ (5Fh). See **Section 26.2.3 “Byte-Oriented and Bit-Oriented Instructions in Indexed Literal Offset Mode”** for details.
Words:	1
Cycles:	1(2) **Note:** 3 cycles if skip and followed by a 2-word instruction.

Q Cycle Activity:

Q1	Q2	Q3	Q4
Decode	Read register ‘f’	Process Data	Write to destination

If skip:

Q1	Q2	Q3	Q4
No operation	No operation	No operation	No operation

If skip and followed by 2-word instruction:

Q1	Q2	Q3	Q4
No operation	No operation	No operation	No operation
No operation	No operation	No operation	No operation

Example:

```
HERE     DCFSNZ  TEMP, 1, 0
ZERO     :
NZERO    :
```

Before Instruction
TEMP = ?
After Instruction
TEMP = TEMP – 1,
If TEMP = 0;
PC = Address (ZERO)
If TEMP ≠ 0;
PC = Address (NZERO)

GOTO	Unconditional Branch
Syntax:	GOTO k
Operands:	$0 \le k \le 1048575$
Operation:	$k \rightarrow$ PC<20:1>
Status Affected:	None
Encoding: 1st word (k<7:0>) 2nd word(k<19:8>)	1110 k7kkk kkkk0 / 1111 k19kkk kkkk kkkk8
Description:	GOTO allows an unconditional branch anywhere within entire 2-Mbyte memory range. The 20-bit value 'k' is loaded into PC<20:1>. GOTO is always a two-cycle instruction.
Words:	2
Cycles:	2

Q Cycle Activity:

Q1	Q2	Q3	Q4
Decode	Read literal 'k'<7:0>,	No operation	Read literal 'k'<19:8>, Write to PC
No operation	No operation	No operation	No operation

Example: `GOTO THERE`

After Instruction
PC = Address (THERE)

INCF	Increment f
Syntax:	INCF f {,d {,a}}
Operands:	$0 \le f \le 255$ $d \in [0,1]$ $a \in [0,1]$
Operation:	(f) + 1 $\rightarrow$ dest
Status Affected:	C, DC, N, OV, Z
Encoding:	0010 10da ffff ffff
Description:	The contents of register 'f' are incremented. If 'd' is '0', the result is placed in W. If 'd' is '1', the result is placed back in register 'f' (default). If 'a' is '0', the Access Bank is selected. If 'a' is '1', the BSR is used to select the GPR bank (default). If 'a' is '0' and the extended instruction set is enabled, this instruction operates in Indexed Literal Offset Addressing mode whenever $f \le 95$ (5Fh). See **Section 26.2.3 "Byte-Oriented and Bit-Oriented Instructions in Indexed Literal Offset Mode"** for details.
Words:	1
Cycles:	1

Q Cycle Activity:

Q1	Q2	Q3	Q4
Decode	Read register 'f'	Process Data	Write to destination

Example: `INCF CNT, 1, 0`

Before Instruction
CNT = FFh
Z = 0
C = ?
DC = ?

After Instruction
CNT = 00h
Z = 1
C = 1
DC = 1

© 2008 Microchip Technology Inc.

INCFSZ — Increment f, Skip if 0

Syntax:	INCFSZ f {,d {,a}}
Operands:	$0 \le f \le 255$ $d \in [0,1]$ $a \in [0,1]$
Operation:	(f) + 1 → dest, skip if result = 0
Status Affected:	None
Encoding:	0011 | 11da | ffff | ffff
Description:	The contents of register 'f' are incremented. If 'd' is '0', the result is placed in W. If 'd' is '1', the result is placed back in register 'f'. (default) If the result is '0', the next instruction which is already fetched is discarded and a NOP is executed instead, making it a two-cycle instruction. If 'a' is '0', the Access Bank is selected. If 'a' is '1', the BSR is used to select the GPR bank (default). If 'a' is '0' and the extended instruction set is enabled, this instruction operates in Indexed Literal Offset Addressing mode whenever $f \le 95$ (5Fh). See **Section 26.2.3 "Byte-Oriented and Bit-Oriented Instructions in Indexed Literal Offset Mode"** for details.
Words:	1
Cycles:	1(2) **Note:** 3 cycles if skip and followed by a 2-word instruction.

Q Cycle Activity:

Q1	Q2	Q3	Q4
Decode	Read register 'f'	Process Data	Write to destination

If skip:

Q1	Q2	Q3	Q4
No operation	No operation	No operation	No operation

If skip and followed by 2-word instruction:

Q1	Q2	Q3	Q4
No operation	No operation	No operation	No operation
No operation	No operation	No operation	No operation

Example:

```
HERE    INCFSZ   CNT, 1, 0
NZERO   :
ZERO    :
```

Before Instruction
PC = Address (HERE)
After Instruction
CNT = CNT + 1
If CNT = 0;
PC = Address (ZERO)
If CNT ≠ 0;
PC = Address (NZERO)

INFSNZ — Increment f, Skip if not 0

Syntax:	INFSNZ f {,d {,a}}
Operands:	$0 \le f \le 255$ $d \in [0,1]$ $a \in [0,1]$
Operation:	(f) + 1 → dest, skip if result ≠ 0
Status Affected:	None
Encoding:	0100 | 10da | ffff | ffff
Description:	The contents of register 'f' are incremented. If 'd' is '0', the result is placed in W. If 'd' is '1', the result is placed back in register 'f' (default). If the result is not '0', the next instruction which is already fetched is discarded and a NOP is executed instead, making it a two-cycle instruction. If 'a' is '0', the Access Bank is selected. If 'a' is '1', the BSR is used to select the GPR bank (default). If 'a' is '0' and the extended instruction set is enabled, this instruction operates in Indexed Literal Offset Addressing mode whenever $f \le 95$ (5Fh). See **Section 26.2.3 "Byte-Oriented and Bit-Oriented Instructions in Indexed Literal Offset Mode"** for details.
Words:	1
Cycles:	1(2) **Note:** 3 cycles if skip and followed by a 2-word instruction.

Q Cycle Activity:

Q1	Q2	Q3	Q4
Decode	Read register 'f'	Process Data	Write to destination

If skip:

Q1	Q2	Q3	Q4
No operation	No operation	No operation	No operation

If skip and followed by 2-word instruction:

Q1	Q2	Q3	Q4
No operation	No operation	No operation	No operation
No operation	No operation	No operation	No operation

Example:

```
HERE    INFSNZ  REG, 1, 0
ZERO
NZERO
```

Before Instruction
PC = Address (HERE)
After Instruction
REG = REG + 1
If REG ≠ 0;
PC = Address (NZERO)
If REG = 0;
PC = Address (ZERO)

IORLW	Inclusive OR Literal with W
Syntax:	IORLW k
Operands:	$0 \le k \le 255$
Operation:	(W) .OR. k → W
Status Affected:	N, Z
Encoding:	0000 | 1001 | kkkk | kkkk
Description:	The contents of W are ORed with the eight-bit literal 'k'. The result is placed in W.
Words:	1
Cycles:	1

Q Cycle Activity:

Q1	Q2	Q3	Q4
Decode	Read literal 'k'	Process Data	Write to W

Example: `IORLW 35h`

Before Instruction
W = 9Ah
After Instruction
W = BFh

IORWF	Inclusive OR W with f
Syntax:	IORWF f {,d {,a}}
Operands:	$0 \le f \le 255$ $d \in [0,1]$ $a \in [0,1]$
Operation:	(W) .OR. (f) → dest
Status Affected:	N, Z
Encoding:	0001 | 00da | ffff | ffff
Description:	Inclusive OR W with register 'f'. If 'd' is '0', the result is placed in W. If 'd' is '1', the result is placed back in register 'f' (default). If 'a' is '0', the Access Bank is selected. If 'a' is '1', the BSR is used to select the GPR bank (default). If 'a' is '0' and the extended instruction set is enabled, this instruction operates in Indexed Literal Offset Addressing mode whenever $f \le 95$ (5Fh). See **Section 26.2.3 "Byte-Oriented and Bit-Oriented Instructions in Indexed Literal Offset Mode"** for details.
Words:	1
Cycles:	1

Q Cycle Activity:

Q1	Q2	Q3	Q4
Decode	Read register 'f'	Process Data	Write to destination

Example: `IORWF RESULT, 0, 1`

Before Instruction
RESULT = 13h
W = 91h
After Instruction
RESULT = 13h
W = 93h

© 2008 Microchip Technology Inc.

LFSR **Load FSR**

Syntax: LFSR f, k

Operands: $0 \le f \le 2$
$0 \le k \le 4095$

Operation: k → FSRf

Status Affected: None

Encoding:

1110	1110	00ff	k11kkk
1111	0000	k7kkk	kkkk

Description: The 12-bit literal 'k' is loaded into the file select register pointed to by 'f'.

Words: 2

Cycles: 2

Q Cycle Activity:

Q1	Q2	Q3	Q4
Decode	Read literal 'k' MSB	Process Data	Write literal 'k' MSB to FSRfH
Decode	Read literal 'k' LSB	Process Data	Write literal 'k' to FSRfL

Example: `LFSR 2, 3ABh`

After Instruction
FSR2H = 03h
FSR2L = ABh

MOVF **Move f**

Syntax: MOVF f {,d {,a}}

Operands: $0 \le f \le 255$
$d \in [0,1]$
$a \in [0,1]$

Operation: f → dest

Status Affected: N, Z

Encoding:

0101	00da	ffff	ffff

Description: The contents of register 'f' are moved to a destination dependent upon the status of 'd'. If 'd' is '0', the result is placed in W. If 'd' is '1', the result is placed back in register 'f' (default). Location 'f' can be anywhere in the 256-byte bank.

If 'a' is '0', the Access Bank is selected. If 'a' is '1', the BSR is used to select the GPR bank (default).

If 'a' is '0' and the extended instruction set is enabled, this instruction operates in Indexed Literal Offset Addressing mode whenever $f \le 95$ (5Fh). See **Section 26.2.3 "Byte-Oriented and Bit-Oriented Instructions in Indexed Literal Offset Mode"** for details.

Words: 1

Cycles: 1

Q Cycle Activity:

Q1	Q2	Q3	Q4
Decode	Read register 'f'	Process Data	Write W

Example: `MOVF REG, 0, 0`

Before Instruction
REG = 22h
W = FFh
After Instruction
REG = 22h
W = 22h

MOVFF	Move f to f
Syntax:	MOVFF f_s,f_d
Operands:	$0 \le f_s \le 4095$ $0 \le f_d \le 4095$
Operation:	$(f_s) \rightarrow f_d$
Status Affected:	None
Encoding: 1st word (source) 2nd word (destin.)	1100 ffff ffff ffffs 1111 ffff ffff ffffd
Description:	The contents of source register 'f_s' are moved to destination register 'f_d'. Location of source 'f_s' can be anywhere in the 4096-byte data space (000h to FFFh) and location of destination 'f_d' can also be anywhere from 000h to FFFh. Either source or destination can be W (a useful special situation). MOVFF is particularly useful for transferring a data memory location to a peripheral register (such as the transmit buffer or an I/O port). The MOVFF instruction cannot use the PCL, TOSU, TOSH or TOSL as the destination register
Words:	2
Cycles:	2 (3)

Q Cycle Activity:

Q1	Q2	Q3	Q4
Decode	Read register 'f' (src)	Process Data	No operation
Decode	No operation No dummy read	No operation	Write register 'f' (dest)

Example: `MOVFF REG1, REG2`

Before Instruction
REG1 = 33h
REG2 = 11h
After Instruction
REG1 = 33h
REG2 = 33h

MOVLB	Move Literal to Low Nibble in BSR
Syntax:	MOVLW k
Operands:	$0 \le k \le 255$
Operation:	$k \rightarrow BSR$
Status Affected:	None
Encoding:	0000 0001 kkkk kkkk
Description:	The eight-bit literal 'k' is loaded into the Bank Select Register (BSR). The value of BSR<7:4> always remains '0' regardless of the value of k_7:k_4.
Words:	1
Cycles:	1

Q Cycle Activity:

Q1	Q2	Q3	Q4
Decode	Read literal 'k'	Process Data	Write literal 'k' to BSR

Example: `MOVLB 5`

Before Instruction
BSR Register = 02h
After Instruction
BSR Register = 05h

© 2008 Microchip Technology Inc.

MOVLW	Move Literal to W
Syntax:	MOVLW k
Operands:	$0 \le k \le 255$
Operation:	$k \rightarrow W$
Status Affected:	None
Encoding:	0000 | 1110 | kkkk | kkkk
Description:	The eight-bit literal ‘k’ is loaded into W.
Words:	1
Cycles:	1

Q Cycle Activity:

Q1	Q2	Q3	Q4
Decode	Read literal ‘k’	Process Data	Write to W

Example: `MOVLW 5Ah`

After Instruction
W = 5Ah

MOVWF	Move W to f
Syntax:	MOVWF f {,a}
Operands:	$0 \le f \le 255$ $a \in [0,1]$
Operation:	$(W) \rightarrow f$
Status Affected:	None
Encoding:	0110 | 111a | ffff | ffff
Description:	Move data from W to register ‘f’. Location ‘f’ can be anywhere in the 256-byte bank. If ‘a’ is ‘0’, the Access Bank is selected. If ‘a’ is ‘1’, the BSR is used to select the GPR bank (default). If ‘a’ is ‘0’ and the extended instruction set is enabled, this instruction operates in Indexed Literal Offset Addressing mode whenever $f \le 95$ (5Fh). See **Section 26.2.3 “Byte-Oriented and Bit-Oriented Instructions in Indexed Literal Offset Mode”** for details.
Words:	1
Cycles:	1

Q Cycle Activity:

Q1	Q2	Q3	Q4
Decode	Read register ‘f’	Process Data	Write register ‘f’

Example: `MOVWF REG, 0`

Before Instruction
W = 4Fh
REG = FFh
After Instruction
W = 4Fh
REG = 4Fh

MULLW **Multiply Literal with W**

Syntax: MULLW k

Operands: $0 \le k \le 255$

Operation: (W) x k → PRODH:PRODL

Status Affected: None

Encoding:

0000	1101	kkkk	kkkk

Description: An unsigned multiplication is carried out between the contents of W and the 8-bit literal ‘k’. The 16-bit result is placed in PRODH:PRODL register pair. PRODH contains the high byte.

W is unchanged.

None of the status flags are affected.

Note that neither Overflow nor Carry is possible in this operation. A Zero result is possible but not detected.

Words: 1

Cycles: 1

Q Cycle Activity:

Q1	Q2	Q3	Q4
Decode	Read literal ‘k’	Process Data	Write registers PRODH: PRODL

Example: `MULLW 0C4h`

Before Instruction
W = E2h
PRODH = ?
PRODL = ?
After Instruction
W = E2h
PRODH = ADh
PRODL = 08h

MULWF **Multiply W with f**

Syntax: MULWF f {,a}

Operands: $0 \le f \le 255$
$a \in [0,1]$

Operation: (W) x (f) → PRODH:PRODL

Status Affected: None

Encoding:

0000	001a	ffff	ffff

Description: An unsigned multiplication is carried out between the contents of W and the register file location ‘f’. The 16-bit result is stored in the PRODH:PRODL register pair. PRODH contains the high byte. Both W and ‘f’ are unchanged.

None of the status flags are affected.

Note that neither Overflow nor Carry is possible in this operation. A Zero result is possible but not detected.

If ‘a’ is ‘0’, the Access Bank is selected. If ‘a’ is ‘1’, the BSR is used to select the GPR bank (default).

If ‘a’ is ‘0’ and the extended instruction set is enabled, this instruction operates in Indexed Literal Offset Addressing mode whenever $f \le 95$ (5Fh). See **Section 26.2.3 “Byte-Oriented and Bit-Oriented Instructions in Indexed Literal Offset Mode”** for details.

Words: 1

Cycles: 1

Q Cycle Activity:

Q1	Q2	Q3	Q4
Decode	Read register ‘f’	Process Data	Write registers PRODH: PRODL

Example: `MULWF REG, 1`

Before Instruction
W = C4h
REG = B5h
PRODH = ?
PRODL = ?
After Instruction
W = C4h
REG = B5h
PRODH = 8Ah
PRODL = 94h

© 2008 Microchip Technology Inc.

NEGF	Negate f
Syntax:	NEGF f {,a}
Operands:	$0 \le f \le 255$ $a \in [0,1]$
Operation:	$(\overline{f}) + 1 \rightarrow f$
Status Affected:	N, OV, C, DC, Z
Encoding:	0110 | 110a | ffff | ffff
Description:	Location ‘f’ is negated using two’s complement. The result is placed in the data memory location ‘f’. If ‘a’ is ‘0’, the Access Bank is selected. If ‘a’ is ‘1’, the BSR is used to select the GPR bank (default). If ‘a’ is ‘0’ and the extended instruction set is enabled, this instruction operates in Indexed Literal Offset Addressing mode whenever $f \le 95$ (5Fh). See **Section 26.2.3 “Byte-Oriented and Bit-Oriented Instructions in Indexed Literal Offset Mode”** for details.
Words:	1
Cycles:	1

Q Cycle Activity:

Q1	Q2	Q3	Q4
Decode	Read register ‘f’	Process Data	Write register ‘f’

Example: `NEGF REG, 1`

Before Instruction
REG = 0011 1010 [3Ah]
After Instruction
REG = 1100 0110 [C6h]

NOP	No Operation
Syntax:	NOP
Operands:	None
Operation:	No operation
Status Affected:	None
Encoding:	0000 1111 | 0000 xxxx | 0000 xxxx | 0000 xxxx
Description:	No operation.
Words:	1
Cycles:	1

Q Cycle Activity:

Q1	Q2	Q3	Q4
Decode	No operation	No operation	No operation

Example:

None.

POP	Pop Top of Return Stack
Syntax:	POP
Operands:	None
Operation:	(TOS) → bit bucket
Status Affected:	None
Encoding:	0000 0000 0000 0110
Description:	The TOS value is pulled off the return stack and is discarded. The TOS value then becomes the previous value that was pushed onto the return stack. This instruction is provided to enable the user to properly manage the return stack to incorporate a software stack.
Words:	1
Cycles:	1

Q Cycle Activity:

Q1	Q2	Q3	Q4
Decode	No operation	POP TOS value	No operation

Example: `POP`
`GOTO NEW`

Before Instruction
TOS = 0031A2h
Stack (1 level down) = 014332h

After Instruction
TOS = 014332h
PC = NEW

PUSH	Push Top of Return Stack
Syntax:	PUSH
Operands:	None
Operation:	(PC + 2) → TOS
Status Affected:	None
Encoding:	0000 0000 0000 0101
Description:	The PC + 2 is pushed onto the top of the return stack. The previous TOS value is pushed down on the stack. This instruction allows implementing a software stack by modifying TOS and then pushing it onto the return stack.
Words:	1
Cycles:	1

Q Cycle Activity:

Q1	Q2	Q3	Q4
Decode	PUSH PC + 2 onto return stack	No operation	No operation

Example: `PUSH`

Before Instruction
TOS = 345Ah
PC = 0124h

After Instruction
PC = 0126h
TOS = 0126h
Stack (1 level down) = 345Ah

© 2008 Microchip Technology Inc.

RCALL	Relative Call
Syntax:	RCALL n
Operands:	$-1024 \le n \le 1023$
Operation:	(PC) + 2 → TOS, (PC) + 2 + 2n → PC
Status Affected:	None
Encoding:	1101 | 1nnn | nnnn | nnnn
Description:	Subroutine call with a jump up to 1K from the current location. First, return address (PC + 2) is pushed onto the stack. Then, add the 2's complement number '2n' to the PC. Since the PC will have incremented to fetch the next instruction, the new address will be PC + 2 + 2n. This instruction is a two-cycle instruction.
Words:	1
Cycles:	2

Q Cycle Activity:

Q1	Q2	Q3	Q4
Decode	Read literal 'n' PUSH PC to stack	Process Data	Write to PC
No operation	No operation	No operation	No operation

Example: `HERE RCALL Jump`

Before Instruction
PC = Address (HERE)
After Instruction
PC = Address (Jump)
TOS = Address (HERE + 2)

RESET	Reset
Syntax:	RESET
Operands:	None
Operation:	Reset all registers and flags that are affected by a $\overline{\text{MCLR}}$ Reset.
Status Affected:	All
Encoding:	0000 | 0000 | 1111 | 1111
Description:	This instruction provides a way to execute a $\overline{\text{MCLR}}$ Reset in software.
Words:	1
Cycles:	1

Q Cycle Activity:

Q1	Q2	Q3	Q4
Decode	Start reset	No operation	No operation

Example: `RESET`

After Instruction
Registers = Reset Value
Flags* = Reset Value

RETFIE	Return from Interrupt
Syntax:	RETFIE {s}
Operands:	s ∈ [0,1]
Operation:	(TOS) → PC, 1 → GIE/GIEH or PEIE/GIEL, if s = 1 (WS) → W, (STATUSS) → STATUS, (BSRS) → BSR, PCLATU, PCLATH are unchanged
Status Affected:	GIE/GIEH, PEIE/GIEL.
Encoding:	0000 | 0000 | 0001 | 000s
Description:	Return from interrupt. Stack is popped and Top-of-Stack (TOS) is loaded into the PC. Interrupts are enabled by setting either the high or low-priority global interrupt enable bit. If 's' = 1, the contents of the shadow registers WS, STATUSS and BSRS are loaded into their corresponding registers W, STATUS and BSR. If 's' = 0, no update of these registers occurs (default).
Words:	1
Cycles:	2

Q Cycle Activity:

Q1	Q2	Q3	Q4
Decode	No operation	No operation	POP PC from stack Set GIEH or GIEL
No operation	No operation	No operation	No operation

Example: `RETFIE 1`

After Interrupt

PC	=	TOS
W	=	WS
BSR	=	BSRS
STATUS	=	STATUSS
GIE/GIEH, PEIE/GIEL	=	1

RETLW	Return Literal to W
Syntax:	RETLW k
Operands:	0 ≤ k ≤ 255
Operation:	k → W, (TOS) → PC, PCLATU, PCLATH are unchanged
Status Affected:	None
Encoding:	0000 | 1100 | kkkk | kkkk
Description:	W is loaded with the eight-bit literal 'k'. The program counter is loaded from the top of the stack (the return address). The high address latch (PCLATH) remains unchanged.
Words:	1
Cycles:	2

Q Cycle Activity:

Q1	Q2	Q3	Q4
Decode	Read literal 'k'	Process Data	POP PC from stack, write to W
No operation	No operation	No operation	No operation

Example:

```
    CALL TABLE  ; W contains table
                ; offset value
                ; W now has
                ; table value
    :
TABLE
    ADDWF PCL   ; W = offset
    RETLW k0    ; Begin table
    RETLW k1    ;
    :
    :
    RETLW kn    ; End of table
```

Before Instruction
W = 07h
After Instruction
W = value of kn

© 2008 Microchip Technology Inc.

RETURN	Return from Subroutine
Syntax:	RETURN {s}
Operands:	s ∈ [0,1]
Operation:	(TOS) → PC, if s = 1 (WS) → W, (STATUSS) → STATUS, (BSRS) → BSR, PCLATU, PCLATH are unchanged
Status Affected:	None
Encoding:	0000 | 0000 | 0001 | 001s
Description:	Return from subroutine. The stack is popped and the top of the stack (TOS) is loaded into the program counter. If 's'= 1, the contents of the shadow registers WS, STATUSS and BSRS are loaded into their corresponding registers W, STATUS and BSR. If 's' = 0, no update of these registers occurs (default).
Words:	1
Cycles:	2

Q Cycle Activity:

Q1	Q2	Q3	Q4
Decode	No operation	Process Data	POP PC from stack
No operation	No operation	No operation	No operation

Example: `RETURN`

After Instruction:
PC = TOS

RLCF	Rotate Left f through Carry
Syntax:	RLCF f {,d {,a}}
Operands:	0 ≤ f ≤ 255 d ∈ [0,1] a ∈ [0,1]
Operation:	(f<n>) → dest<n + 1>, (f<7>) → C, (C) → dest<0>
Status Affected:	C, N, Z
Encoding:	0011 | 01da | ffff | ffff
Description:	The contents of register 'f' are rotated one bit to the left through the Carry flag. If 'd' is '0', the result is placed in W. If 'd' is '1', the result is stored back in register 'f' (default). If 'a' is '0', the Access Bank is selected. If 'a' is '1', the BSR is used to select the GPR bank (default). If 'a' is '0' and the extended instruction set is enabled, this instruction operates in Indexed Literal Offset Addressing mode whenever f ≤ 95 (5Fh). See **Section 26.2.3 "Byte-Oriented and Bit-Oriented Instructions in Indexed Literal Offset Mode"** for details.
Words:	1
Cycles:	1

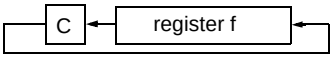

Q Cycle Activity:

Q1	Q2	Q3	Q4
Decode	Read register 'f'	Process Data	Write to destination

Example: `RLCF REG, 0, 0`

Before Instruction
REG = 1110 0110
C = 0
After Instruction
REG = 1110 0110
W = 1100 1100
C = 1

RLNCF	**Rotate Left f (no carry)**
Syntax:	RLNCF f {,d {,a}}
Operands:	$0 \le f \le 255$ $d \in [0,1]$ $a \in [0,1]$
Operation:	(f<n>) → dest<n + 1>, (f<7>) → dest<0>
Status Affected:	N, Z
Encoding:	0100 | 01da | ffff | ffff
Description:	The contents of register ‘f’ are rotated one bit to the left. If ‘d’ is ‘0’, the result is placed in W. If ‘d’ is ‘1’, the result is stored back in register ‘f’ (default). If ‘a’ is ‘0’, the Access Bank is selected. If ‘a’ is ‘1’, the BSR is used to select the GPR bank (default). If ‘a’ is ‘0’ and the extended instruction set is enabled, this instruction operates in Indexed Literal Offset Addressing mode whenever $f \le 95$ (5Fh). See **Section 26.2.3 “Byte-Oriented and Bit-Oriented Instructions in Indexed Literal Offset Mode”** for details. 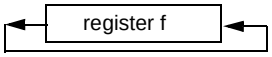
Words:	1
Cycles:	1

Q Cycle Activity:

Q1	Q2	Q3	Q4
Decode	Read register ‘f’	Process Data	Write to destination

Example: `RLNCF REG, 1, 0`

Before Instruction
REG = 1010 1011
After Instruction
REG = 0101 0111

RRCF	**Rotate Right f through Carry**
Syntax:	RRCF f {,d {,a}}
Operands:	$0 \le f \le 255$ $d \in [0,1]$ $a \in [0,1]$
Operation:	(f<n>) → dest<n – 1>, (f<0>) → C, (C) → dest<7>
Status Affected:	C, N, Z
Encoding:	0011 | 00da | ffff | ffff
Description:	The contents of register ‘f’ are rotated one bit to the right through the Carry flag. If ‘d’ is ‘0’, the result is placed in W. If ‘d’ is ‘1’, the result is placed back in register ‘f’ (default). If ‘a’ is ‘0’, the Access Bank is selected. If ‘a’ is ‘1’, the BSR is used to select the GPR bank (default). If ‘a’ is ‘0’ and the extended instruction set is enabled, this instruction operates in Indexed Literal Offset Addressing mode whenever $f \le 95$ (5Fh). See **Section 26.2.3 “Byte-Oriented and Bit-Oriented Instructions in Indexed Literal Offset Mode”** for details. 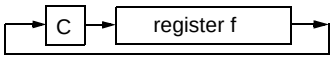
Words:	1
Cycles:	1

Q Cycle Activity:

Q1	Q2	Q3	Q4
Decode	Read register ‘f’	Process Data	Write to destination

Example: `RRCF REG, 0, 0`

Before Instruction
REG = 1110 0110
C = 0
After Instruction
REG = 1110 0110
W = 0111 0011
C = 0

© 2008 Microchip Technology Inc.

RRNCF — Rotate Right f (no carry)

Syntax:	RRNCF f {,d {,a}}
Operands:	$0 \le f \le 255$ $d \in [0,1]$ $a \in [0,1]$
Operation:	(f<n>) → dest<n – 1>, (f<0>) → dest<7>
Status Affected:	N, Z
Encoding:	0100 | 00da | ffff | ffff
Description:	The contents of register ‘f’ are rotated one bit to the right. If ‘d’ is ‘0’, the result is placed in W. If ‘d’ is ‘1’, the result is placed back in register ‘f’ (default). If ‘a’ is ‘0’, the Access Bank will be selected, overriding the BSR value. If ‘a’ is ‘1’, then the bank will be selected as per the BSR value (default). If ‘a’ is ‘0’ and the extended instruction set is enabled, this instruction operates in Indexed Literal Offset Addressing mode whenever $f \le 95$ (5Fh). See **Section 26.2.3 “Byte-Oriented and Bit-Oriented Instructions in Indexed Literal Offset Mode”** for details.

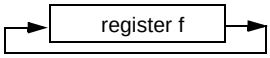

Words:	1
Cycles:	1

Q Cycle Activity:

Q1	Q2	Q3	Q4
Decode	Read register ‘f’	Process Data	Write to destination

Example 1: `RRNCF REG, 1, 0`

```
Before Instruction
    REG    =   1101 0111
After Instruction
    REG    =   1110 1011
```

Example 2: `RRNCF REG, 0, 0`

```
Before Instruction
    W      =   ?
    REG    =   1101 0111
After Instruction
    W      =   1110 1011
    REG    =   1101 0111
```

SETF — Set f

Syntax:	SETF f {,a}
Operands:	$0 \le f \le 255$ $a \in [0,1]$
Operation:	FFh → f
Status Affected:	None
Encoding:	0110 | 100a | ffff | ffff
Description:	The contents of the specified register are set to FFh. If ‘a’ is ‘0’, the Access Bank is selected. If ‘a’ is ‘1’, the BSR is used to select the GPR bank (default). If ‘a’ is ‘0’ and the extended instruction set is enabled, this instruction operates in Indexed Literal Offset Addressing mode whenever $f \le 95$ (5Fh). See **Section 26.2.3 “Byte-Oriented and Bit-Oriented Instructions in Indexed Literal Offset Mode”** for details.
Words:	1
Cycles:	1

Q Cycle Activity:

Q1	Q2	Q3	Q4
Decode	Read register ‘f’	Process Data	Write register ‘f’

Example: `SETF REG,1`

```
Before Instruction
    REG    =   5Ah
After Instruction
    REG    =   FFh
```

SLEEP — Enter Sleep Mode

Syntax:	SLEEP
Operands:	None
Operation:	00h → WDT, 0 → WDT postscaler, 1 → $\overline{TO}$, 0 → $\overline{PD}$
Status Affected:	$\overline{TO}$, $\overline{PD}$
Encoding:	0000 | 0000 | 0000 | 0011
Description:	The Power-Down status bit ($\overline{PD}$) is cleared. The Time-out status bit ($\overline{TO}$) is set. The Watchdog Timer and its postscaler are cleared. The processor is put into Sleep mode with the oscillator stopped.
Words:	1
Cycles:	1

Q Cycle Activity:

Q1	Q2	Q3	Q4
Decode	No operation	Process Data	Go to Sleep

Example: `SLEEP`

Before Instruction
$\overline{TO}$ = ?
$\overline{PD}$ = ?

After Instruction
$\overline{TO}$ = 1 †
$\overline{PD}$ = 0

† If WDT causes wake-up, this bit is cleared.

SUBFWB — Subtract f from W with Borrow

Syntax:	SUBFWB f {,d {,a}}
Operands:	$0 \le f \le 255$ $d \in [0,1]$ $a \in [0,1]$
Operation:	(W) – (f) – ($\overline{C}$) → dest
Status Affected:	N, OV, C, DC, Z
Encoding:	0101 | 01da | ffff | ffff
Description:	Subtract register ‘f’ and Carry flag (borrow) from W (2’s complement method). If ‘d’ is ‘0’, the result is stored in W. If ‘d’ is ‘1’, the result is stored in register ‘f’ (default). If ‘a’ is ‘0’, the Access Bank is selected. If ‘a’ is ‘1’, the BSR is used to select the GPR bank (default). If ‘a’ is ‘0’ and the extended instruction set is enabled, this instruction operates in Indexed Literal Offset Addressing mode whenever $f \le 95$ (5Fh). See **Section 26.2.3 “Byte-Oriented and Bit-Oriented Instructions in Indexed Literal Offset Mode”** for details.
Words:	1
Cycles:	1

Q Cycle Activity:

Q1	Q2	Q3	Q4
Decode	Read register ‘f’	Process Data	Write to destination

Example 1: `SUBFWB REG, 1, 0`

Before Instruction
REG = 3
W = 2
C = 1

After Instruction
REG = FF
W = 2
C = 0
Z = 0
N = 1 ; result is negative

Example 2: `SUBFWB REG, 0, 0`

Before Instruction
REG = 2
W = 5
C = 1

After Instruction
REG = 2
W = 3
C = 1
Z = 0
N = 0 ; result is positive

Example 3: `SUBFWB REG, 1, 0`

Before Instruction
REG = 1
W = 2
C = 0

After Instruction
REG = 0
W = 2
C = 1
Z = 1 ; result is zero
N = 0

© 2008 Microchip Technology Inc.

SUBLW — Subtract W from literal

Syntax:	SUBLW k
Operands:	$0 \le k \le 255$
Operation:	k – (W) → W
Status Affected:	N, OV, C, DC, Z
Encoding:	0000 | 1000 | kkkk | kkkk
Description:	W is subtracted from the eight-bit literal ‘k’. The result is placed in W.
Words:	1
Cycles:	1

Q Cycle Activity:

Q1	Q2	Q3	Q4
Decode	Read literal ‘k’	Process Data	Write to W

Example 1: `SUBLW 02h`

```
Before Instruction
    W   =   01h
    C   =   ?
After Instruction
    W   =   01h
    C   =   1     ; result is positive
    Z   =   0
    N   =   0
```

Example 2: `SUBLW 02h`

```
Before Instruction
    W   =   02h
    C   =   ?
After Instruction
    W   =   00h
    C   =   1     ; result is zero
    Z   =   1
    N   =   0
```

Example 3: `SUBLW 02h`

```
Before Instruction
    W   =   03h
    C   =   ?
After Instruction
    W   =   FFh   ; (2's complement)
    C   =   0     ; result is negative
    Z   =   0
    N   =   1
```

SUBWF — Subtract W from f

Syntax:	SUBWF f {,d {,a}}
Operands:	$0 \le f \le 255$ $d \in [0,1]$ $a \in [0,1]$
Operation:	(f) – (W) → dest
Status Affected:	N, OV, C, DC, Z
Encoding:	0101 | 11da | ffff | ffff
Description:	Subtract W from register ‘f’ (2’s complement method). If ‘d’ is ‘0’, the result is stored in W. If ‘d’ is ‘1’, the result is stored back in register ‘f’ (default). If ‘a’ is ‘0’, the Access Bank is selected. If ‘a’ is ‘1’, the BSR is used to select the GPR bank (default). If ‘a’ is ‘0’ and the extended instruction set is enabled, this instruction operates in Indexed Literal Offset Addressing mode whenever $f \le 95$ (5Fh). See **Section 26.2.3 “Byte-Oriented and Bit-Oriented Instructions in Indexed Literal Offset Mode”** for details.
Words:	1
Cycles:	1

Q Cycle Activity:

Q1	Q2	Q3	Q4
Decode	Read register ‘f’	Process Data	Write to destination

Example 1: `SUBWF REG, 1, 0`

```
Before Instruction
    REG   =   3
    W     =   2
    C     =   ?
After Instruction
    REG   =   1
    W     =   2
    C     =   1     ; result is positive
    Z     =   0
    N     =   0
```

Example 2: `SUBWF REG, 0, 0`

```
Before Instruction
    REG   =   2
    W     =   2
    C     =   ?
After Instruction
    REG   =   2
    W     =   0
    C     =   1     ; result is zero
    Z     =   1
    N     =   0
```

Example 3: `SUBWF REG, 1, 0`

```
Before Instruction
    REG   =   1
    W     =   2
    C     =   ?
After Instruction
    REG   =   FFh   ;(2's complement)
    W     =   2
    C     =   0     ; result is negative
    Z     =   0
    N     =   1
```

SUBWFB — Subtract W from f with Borrow

Syntax: SUBWFB f {,d {,a}}

Operands: $0 \le f \le 255$
$d \in [0,1]$
$a \in [0,1]$

Operation: (f) – (W) – ($\overline{C}$) → dest

Status Affected: N, OV, C, DC, Z

Encoding:

0101	10da	ffff	ffff

Description: Subtract W and the Carry flag (borrow) from register ‘f’ (2’s complement method). If ‘d’ is ‘0’, the result is stored in W. If ‘d’ is ‘1’, the result is stored back in register ‘f’ (default).

If ‘a’ is ‘0’, the Access Bank is selected. If ‘a’ is ‘1’, the BSR is used to select the GPR bank (default).

If ‘a’ is ‘0’ and the extended instruction set is enabled, this instruction operates in Indexed Literal Offset Addressing mode whenever $f \le 95$ (5Fh). See **Section 26.2.3 “Byte-Oriented and Bit-Oriented Instructions in Indexed Literal Offset Mode”** for details.

Words: 1

Cycles: 1

Q Cycle Activity:

Q1	Q2	Q3	Q4
Decode	Read register ‘f’	Process Data	Write to destination

Example 1: `SUBWFB REG, 1, 0`

```
Before Instruction
    REG  =  19h     (0001 1001)
    W    =  0Dh     (0000 1101)
    C    =  1
After Instruction
    REG  =  0Ch     (0000 1011)
    W    =  0Dh     (0000 1101)
    C    =  1
    Z    =  0
    N    =  0       ; result is positive
```

Example 2: `SUBWFB REG, 0, 0`

```
Before Instruction
    REG  =  1Bh     (0001 1011)
    W    =  1Ah     (0001 1010)
    C    =  0
After Instruction
    REG  =  1Bh     (0001 1011)
    W    =  00h
    C    =  1
    Z    =  1       ; result is zero
    N    =  0
```

Example 3: `SUBWFB REG, 1, 0`

```
Before Instruction
    REG  =  03h     (0000 0011)
    W    =  0Eh     (0000 1101)
    C    =  1
After Instruction
    REG  =  F5h     (1111 0100)
                    ; [2's comp]
    W    =  0Eh     (0000 1101)
    C    =  0
    Z    =  0
    N    =  1       ; result is negative
```

SWAPF — Swap f

Syntax: SWAPF f {,d {,a}}

Operands: $0 \le f \le 255$
$d \in [0,1]$
$a \in [0,1]$

Operation: (f<3:0>) → dest<7:4>,
(f<7:4>) → dest<3:0>

Status Affected: None

Encoding:

0011	10da	ffff	ffff

Description: The upper and lower nibbles of register ‘f’ are exchanged. If ‘d’ is ‘0’, the result is placed in W. If ‘d’ is ‘1’, the result is placed in register ‘f’ (default).

If ‘a’ is ‘0’, the Access Bank is selected. If ‘a’ is ‘1’, the BSR is used to select the GPR bank (default).

If ‘a’ is ‘0’ and the extended instruction set is enabled, this instruction operates in Indexed Literal Offset Addressing mode whenever $f \le 95$ (5Fh). See **Section 26.2.3 “Byte-Oriented and Bit-Oriented Instructions in Indexed Literal Offset Mode”** for details.

Words: 1

Cycles: 1

Q Cycle Activity:

Q1	Q2	Q3	Q4
Decode	Read register ‘f’	Process Data	Write to destination

Example: `SWAPF REG, 1, 0`

```
Before Instruction
    REG  =  53h
After Instruction
    REG  =  35h
```


© 2008 Microchip Technology Inc.

TBLRD	Table Read
Syntax:	TBLRD (*; *+; *-; +*)
Operands:	None
Operation:	if TBLRD *, (Prog Mem (TBLPTR)) → TABLAT; TBLPTR – No Change if TBLRD *+, (Prog Mem (TBLPTR)) → TABLAT; (TBLPTR) + 1 → TBLPTR if TBLRD *-, (Prog Mem (TBLPTR)) → TABLAT; (TBLPTR) – 1 → TBLPTR if TBLRD +*, (TBLPTR) + 1 → TBLPTR; (Prog Mem (TBLPTR)) → TABLAT
Status Affected:	None
Encoding:	0000 | 0000 | 0000 | 10nn nn=0 * =1 *+ =2 *- =3 +*
Description:	This instruction is used to read the contents of Program Memory (P.M.). To address the program memory, a pointer called Table Pointer (TBLPTR) is used. The TBLPTR (a 21-bit pointer) points to each byte in the program memory. TBLPTR has a 2-Mbyte address range. TBLPTR<0> = 0:Least Significant Byte of Program Memory Word TBLPTR<0> = 1:Most Significant Byte of Program Memory Word The TBLRD instruction can modify the value of TBLPTR as follows: • no change • post-increment • post-decrement • pre-increment
Words:	1
Cycles:	2

Q Cycle Activity:

Q1	Q2	Q3	Q4
Decode	No operation	No operation	No operation
No operation	No operation (Read Program Memory)	No operation	No operation (Write TABLAT)

TBLRD — Table Read (Continued)

Example 1: `TBLRD *+ ;`

Before Instruction
- TABLAT = 55h
- TBLPTR = 00A356h
- MEMORY(00A356h) = 34h

After Instruction
- TABLAT = 34h
- TBLPTR = 00A357h

Example 2: `TBLRD +* ;`

Before Instruction
- TABLAT = AAh
- TBLPTR = 01A357h
- MEMORY(01A357h) = 12h
- MEMORY(01A358h) = 34h

After Instruction
- TABLAT = 34h
- TBLPTR = 01A358h

TBLWT **Table Write**

Syntax: TBLWT (*; *+; *-; +*)

Operands: None

Operation: if TBLWT*,
(TABLAT) → Holding Register;
TBLPTR – No Change
if TBLWT*+,
(TABLAT) → Holding Register;
(TBLPTR) + 1 → TBLPTR
if TBLWT*-,
(TABLAT) → Holding Register;
(TBLPTR) – 1 → TBLPTR
if TBLWT+*,
(TBLPTR) + 1 → TBLPTR;
(TABLAT) → Holding Register

Status Affected: None

Encoding:

0000	0000	0000	11nn nn=0 * =1 *+ =2 *- =3 +*

Description: This instruction uses the 3 LSBs of TBLPTR to determine which of the 8 holding registers the TABLAT is written to. The holding registers are used to program the contents of Program Memory (P.M.). (Refer to **Section 5.0 "Memory Organization"** for additional details on programming Flash memory.)

The TBLPTR (a 21-bit pointer) points to each byte in the program memory. TBLPTR has a 2-Mbyte address range. The LSb of the TBLPTR selects which byte of the program memory location to access.

TBLPTR<0> = 0: Least Significant Byte of Program Memory Word

TBLPTR<0> = 1: Most Significant Byte of Program Memory Word

The TBLWT instruction can modify the value of TBLPTR as follows:

- no change
- post-increment
- post-decrement
- pre-increment

Words: 1

Cycles: 2

Q Cycle Activity:

Q1	Q2	Q3	Q4
Decode	No operation	No operation	No operation
No operation	No operation (Read TABLAT)	No operation	No operation (Write to Holding Register)

TBLWT **Table Write (Continued)**

Example 1: `TBLWT *+;`

Before Instruction
TABLAT = 55h
TBLPTR = 00A356h
HOLDING REGISTER (00A356h) = FFh

After Instructions (table write completion)
TABLAT = 55h
TBLPTR = 00A357h
HOLDING REGISTER (00A356h) = 55h

Example 2: `TBLWT +*;`

Before Instruction
TABLAT = 34h
TBLPTR = 01389Ah
HOLDING REGISTER (01389Ah) = FFh
HOLDING REGISTER (01389Bh) = FFh

After Instruction (table write completion)
TABLAT = 34h
TBLPTR = 01389Bh
HOLDING REGISTER (01389Ah) = FFh
HOLDING REGISTER (01389Bh) = 34h

© 2008 Microchip Technology Inc.

TSTFSZ	Test f, Skip if 0
Syntax:	TSTFSZ f {,a}
Operands:	$0 \le f \le 255$ $a \in [0,1]$
Operation:	skip if f = 0
Status Affected:	None
Encoding:	0110 | 011a | ffff | ffff
Description:	If 'f' = 0, the next instruction fetched during the current instruction execution is discarded and a NOP is executed, making this a two-cycle instruction. If 'a' is '0', the Access Bank is selected. If 'a' is '1', the BSR is used to select the GPR bank (default). If 'a' is '0' and the extended instruction set is enabled, this instruction operates in Indexed Literal Offset Addressing mode whenever $f \le 95$ (5Fh). See **Section 26.2.3 "Byte-Oriented and Bit-Oriented Instructions in Indexed Literal Offset Mode"** for details.
Words:	1
Cycles:	1(2) **Note:** 3 cycles if skip and followed by a 2-word instruction.

Q Cycle Activity:

Q1	Q2	Q3	Q4
Decode	Read register 'f'	Process Data	No operation

If skip:

Q1	Q2	Q3	Q4
No operation	No operation	No operation	No operation

If skip and followed by 2-word instruction:

Q1	Q2	Q3	Q4
No operation	No operation	No operation	No operation
No operation	No operation	No operation	No operation

Example:

```
HERE    TSTFSZ  CNT, 1
NZERO   :
ZERO    :
```

Before Instruction
PC = Address (HERE)
After Instruction
If CNT = 00h,
PC = Address (ZERO)
If CNT ≠ 00h,
PC = Address (NZERO)

XORLW	Exclusive OR Literal with W
Syntax:	XORLW k
Operands:	$0 \le k \le 255$
Operation:	(W) .XOR. k → W
Status Affected:	N, Z
Encoding:	0000 | 1010 | kkkk | kkkk
Description:	The contents of W are XORed with the 8-bit literal 'k'. The result is placed in W.
Words:	1
Cycles:	1

Q Cycle Activity:

Q1	Q2	Q3	Q4
Decode	Read literal 'k'	Process Data	Write to W

Example: XORLW 0AFh

Before Instruction
W = B5h
After Instruction
W = 1Ah

XORWF	**Exclusive OR W with f**
Syntax:	XORWF f {,d {,a}}
Operands:	$0 \le f \le 255$ $d \in [0,1]$ $a \in [0,1]$
Operation:	(W) .XOR. (f) → dest
Status Affected:	N, Z
Encoding:	`0001` `10da` `ffff` `ffff`
Description:	Exclusive OR the contents of W with register 'f'. If 'd' is '0', the result is stored in W. If 'd' is '1', the result is stored back in the register 'f' (default). If 'a' is '0', the Access Bank is selected. If 'a' is '1', the BSR is used to select the GPR bank (default). If 'a' is '0' and the extended instruction set is enabled, this instruction operates in Indexed Literal Offset Addressing mode whenever $f \le 95$ (5Fh). See **Section 26.2.3 "Byte-Oriented and Bit-Oriented Instructions in Indexed Literal Offset Mode"** for details.
Words:	1
Cycles:	1

Q Cycle Activity:

Q1	Q2	Q3	Q4
Decode	Read register 'f'	Process Data	Write to destination

Example: `XORWF REG, 1, 0`

Before Instruction
REG = AFh
W = B5h
After Instruction
REG = 1Ah
W = B5h

© 2008 Microchip Technology Inc.

26.2 Extended Instruction Set

In addition to the standard 75 instructions of the PIC18 instruction set, the PIC18F8722 family of devices also provide an optional extension to the core CPU functionality. The added features include eight additional instructions that augment Indirect and Indexed Addressing operations and the implementation of Indexed Literal Offset Addressing for many of the standard PIC18 instructions.

The additional features of the extended instruction set are enabled by default. To enable them, users must set the XINST Configuration bit.

The instructions in the extended set can all be classified as literal operations, which either manipulate the File Select Registers, or use them for Indexed Addressing. Two of the instructions, `ADDFSR` and `SUBFSR`, each have an additional special instantiation for using FSR2. These versions (`ADDULNK` and `SUBULNK`) allow for automatic return after execution.

The extended instructions are specifically implemented to optimize re-entrant program code (that is, code that is recursive or that uses a software stack) written in high-level languages, particularly C. Among other things, they allow users working in high-level languages to perform certain operations on data structures more efficiently. These include:

- dynamic allocation and deallocation of software stack space when entering and leaving subroutines
- function pointer invocation
- software Stack Pointer manipulation
- manipulation of variables located in a software stack

A summary of the instructions in the extended instruction set is provided in Table 26-3. Detailed descriptions are provided in **Section 26.2.2 "Extended Instruction Set"**. The opcode field descriptions in Table 26-1 (page 322) apply to both the standard and extended PIC18 instruction sets.

> **Note:** The instruction set extension and the Indexed Literal Offset Addressing mode were designed for optimizing applications written in C; the user may likely never use these instructions directly in assembler. The syntax for these commands is provided as a reference for users who may be reviewing code that has been generated by a compiler.

26.2.1 EXTENDED INSTRUCTION SYNTAX

Most of the extended instructions use indexed arguments, using one of the File Select Registers and some offset to specify a source or destination register. When an argument for an instruction serves as part of Indexed Addressing, it is enclosed in square brackets ("[ ]"). This is done to indicate that the argument is used as an index or offset. The MPASM™ Assembler will flag an error if it determines that an index or offset value is not bracketed.

When the extended instruction set is enabled, brackets are also used to indicate index arguments in byte-oriented and bit-oriented instructions. This is in addition to other changes in their syntax. For more details, see **Section 26.2.3.1 "Extended Instruction Syntax with Standard PIC18 Commands"**.

> **Note:** In the past, square brackets have been used to denote optional arguments in the PIC18 and earlier instruction sets. In this text and going forward, optional arguments are denoted by braces ("{ }").

TABLE 26-3: EXTENSIONS TO THE PIC18 INSTRUCTION SET

Mnemonic, Operands		Description	Cycles	16-Bit Instruction Word MSb			LSb	Status Affected
ADDFSR	f, k	Add Literal to FSR	1	1110	1000	ffkk	kkkk	None
ADDULNK	k	Add Literal to FSR2 and Return	2	1110	1000	11kk	kkkk	None
CALLW		Call Subroutine using WREG	2	0000	0000	0001	0100	None
MOVSF	z_s, f_d	Move z_s (source) to 1st word	2	1110	1011	0zzz	zzzz	None
		f_d (destination) 2nd word		1111	ffff	ffff	ffff	
MOVSS	z_s, z_d	Move z_s (source) to 1st word	2	1110	1011	1zzz	zzzz	None
		z_d (destination) 2nd word		1111	xxxx	xzzz	zzzz	
PUSHL	k	Store Literal at FSR2, Decrement FSR2	1	1110	1010	kkkk	kkkk	None
SUBFSR	f, k	Subtract Literal from FSR	1	1110	1001	ffkk	kkkk	None
SUBULNK	k	Subtract Literal from FSR2 and Return	2	1110	1001	11kk	kkkk	None

26.2.2 EXTENDED INSTRUCTION SET

ADDFSR	Add Literal to FSR
Syntax:	ADDFSR f, k
Operands:	$0 \le k \le 63$ $f \in [0, 1, 2]$
Operation:	FSR(f) + k → FSR(f)
Status Affected:	None
Encoding:	1110 | 1000 | ffkk | kkkk
Description:	The 6-bit literal 'k' is added to the contents of the FSR specified by 'f'.
Words:	1
Cycles:	1

Q Cycle Activity:

Q1	Q2	Q3	Q4
Decode	Read literal 'k'	Process Data	Write to FSR

Example: `ADDFSR 2, 23h`

Before Instruction
FSR2 = 03FFh
After Instruction
FSR2 = 0422h

ADDULNK	Add Literal to FSR2 and Return
Syntax:	ADDULNK k
Operands:	$0 \le k \le 63$
Operation:	FSR2 + k → FSR2, (TOS) → PC
Status Affected:	None
Encoding:	1110 | 1000 | 11kk | kkkk
Description:	The 6-bit literal 'k' is added to the contents of FSR2. A RETURN is then executed by loading the PC with the TOS. The instruction takes two cycles to execute; a NOP is performed during the second cycle. This may be thought of as a special case of the ADDFSR instruction, where f = 3 (binary '11'); it operates only on FSR2.
Words:	1
Cycles:	2

Q Cycle Activity:

Q1	Q2	Q3	Q4
Decode	Read literal 'k'	Process Data	Write to FSR
No Operation	No Operation	No Operation	No Operation

Example: `ADDULNK 23h`

Before Instruction
FSR2 = 03FFh
PC = 0100h
After Instruction
FSR2 = 0422h
PC = (TOS)

Note: All PIC18 instructions may take an optional label argument preceding the instruction mnemonic for use in symbolic addressing. If a label is used, the instruction format then becomes: {label} instruction argument(s).

© 2008 Microchip Technology Inc.

CALLW — Subroutine Call using WREG

Syntax:	CALLW
Operands:	None
Operation:	(PC + 2) → TOS, (W) → PCL, (PCLATH) → PCH, (PCLATU) → PCU
Status Affected:	None
Encoding:	0000 | 0000 | 0001 | 0100
Description	First, the return address (PC + 2) is pushed onto the return stack. Next, the contents of W are written to PCL; the existing value is discarded. Then, the contents of PCLATH and PCLATU are latched into PCH and PCU, respectively. The second cycle is executed as a NOP instruction while the new next instruction is fetched. Unlike CALL, there is no option to update W, STATUS or BSR.
Words:	1
Cycles:	2

Q Cycle Activity:

Q1	Q2	Q3	Q4
Decode	Read WREG	Push PC to stack	No operation
No operation	No operation	No operation	No operation

Example: `HERE CALLW`

Before Instruction
- PC = address (HERE)
- PCLATH = 10h
- PCLATU = 00h
- W = 06h

After Instruction
- PC = 001006h
- TOS = address (HERE + 2)
- PCLATH = 10h
- PCLATU = 00h
- W = 06h

MOVSF — Move Indexed to f

Syntax:	MOVSF [z_s], f_d
Operands:	$0 \le z_s \le 127$ $0 \le f_d \le 4095$
Operation:	((FSR2) + z_s) → f_d
Status Affected:	None
Encoding: 1st word (source) 2nd word (destin.)	1110 | 1011 | 0zzz | zzzzs 1111 | ffff | ffff | ffffd
Description:	The contents of the source register are moved to destination register ‘f_d’. The actual address of the source register is determined by adding the 7-bit literal offset ‘z_s’, in the first word, to the value of FSR2. The address of the destination register is specified by the 12-bit literal ‘f_d’ in the second word. Both addresses can be anywhere in the 4096-byte data space (000h to FFFh). The MOVSF instruction cannot use the PCL, TOSU, TOSH or TOSL as the destination register. If the resultant source address points to an indirect addressing register, the value returned will be 00h.
Words:	2
Cycles:	2

Q Cycle Activity:

Q1	Q2	Q3	Q4
Decode	Determine source addr	Determine source addr	Read source reg
Decode	No operation No dummy read	No operation	Write register ‘f’ (dest)

Example: `MOVSF [05h], REG2`

Before Instruction
- FSR2 = 80h
- Contents of 85h = 33h
- REG2 = 11h

After Instruction
- FSR2 = 80h
- Contents of 85h = 33h
- REG2 = 33h

MOVSS	Move Indexed to Indexed
Syntax:	MOVSS [z_s], [z_d]
Operands:	$0 \le z_s \le 127$ $0 \le z_d \le 127$
Operation:	$((FSR2) + z_s) \rightarrow ((FSR2) + z_d)$
Status Affected:	None
Encoding: 1st word (source) 2nd word (dest.)	1110 1011 1zzz zzzzs 1111 xxxx xzzz zzzzd
Description	The contents of the source register are moved to the destination register. The addresses of the source and destination registers are determined by adding the 7-bit literal offsets ‘z_s’ or ‘z_d’, respectively, to the value of FSR2. Both registers can be located anywhere in the 4096-byte data memory space (000h to FFFh). The MOVSS instruction cannot use the PCL, TOSU, TOSH or TOSL as the destination register. If the resultant source address points to an Indirect Addressing register, the value returned will be 00h. If the resultant destination address points to an Indirect Addressing register, the instruction will execute as a NOP.
Words:	2
Cycles:	2

Q Cycle Activity:

Q1	Q2	Q3	Q4
Decode	Determine source addr	Determine source addr	Read source reg
Decode	Determine dest addr	Determine dest addr	Write to dest reg

Example: `MOVSS [05h], [06h]`

Before Instruction
- FSR2 = 80h
- Contents of 85h = 33h
- Contents of 86h = 11h

After Instruction
- FSR2 = 80h
- Contents of 85h = 33h
- Contents of 86h = 33h

PUSHL	Store Literal at FSR2, Decrement FSR2
Syntax:	PUSHL k
Operands:	$0 \le k \le 255$
Operation:	$k \rightarrow (FSR2)$, $FSR2 - 1 \rightarrow FSR2$
Status Affected:	None
Encoding:	1111 1010 kkkk kkkk
Description:	The 8-bit literal ‘k’ is written to the data memory address specified by FSR2. FSR2 is decremented by 1 after the operation. This instruction allows users to push values onto a software stack.
Words:	1
Cycles:	1

Q Cycle Activity:

Q1	Q2	Q3	Q4
Decode	Read ‘k’	Process data	Write to destination

Example: `PUSHL 08h`

Before Instruction
- FSR2H:FSR2L = 01ECh
- Memory (01ECh) = 00h

After Instruction
- FSR2H:FSR2L = 01EBh
- Memory (01ECh) = 08h

© 2008 Microchip Technology Inc.

SUBFSR	Subtract Literal from FSR
Syntax:	SUBFSR f, k
Operands:	$0 \le k \le 63$ $f \in [0, 1, 2]$
Operation:	FSRf – k → FSRf
Status Affected:	None
Encoding:	1110 | 1001 | ffkk | kkkk
Description:	The 6-bit literal ‘k’ is subtracted from the contents of the FSR specified by ‘f’.
Words:	1
Cycles:	1

Q Cycle Activity:

Q1	Q2	Q3	Q4
Decode	Read register ‘f’	Process Data	Write to destination

Example: `SUBFSR 2, 23h`

Before Instruction
FSR2 = 03FFh
After Instruction
FSR2 = 03DCh

SUBULNK	Subtract Literal from FSR2 and Return
Syntax:	SUBULNK k
Operands:	$0 \le k \le 63$
Operation:	FSR2 – k → FSR2 (TOS) → PC
Status Affected:	None
Encoding:	1110 | 1001 | 11kk | kkkk
Description:	The 6-bit literal ‘k’ is subtracted from the contents of the FSR2. A RETURN is then executed by loading the PC with the TOS. The instruction takes two cycles to execute; a NOP is performed during the second cycle. This may be thought of as a special case of the SUBFSR instruction, where f = 3 (binary ‘11’); it operates only on FSR2.
Words:	1
Cycles:	2

Q Cycle Activity:

Q1	Q2	Q3	Q4
Decode	Read register ‘f’	Process Data	Write to destination
No Operation	No Operation	No Operation	No Operation

Example: `SUBULNK 23h`

Before Instruction
FSR2 = 03FFh
PC = 0100h
After Instruction
FSR2 = 03DCh
PC = (TOS)

26.2.3 BYTE-ORIENTED AND BIT-ORIENTED INSTRUCTIONS IN INDEXED LITERAL OFFSET MODE

Note:	Enabling the PIC18 instruction set extension may cause legacy applications to behave erratically or fail entirely.

In addition to eight new commands in the extended set, enabling the extended instruction set also enables Indexed Literal Offset Addressing (**Section 5.5.1 "Indexed Addressing with Literal Offset"**). This has a significant impact on the way that many commands of the standard PIC18 instruction set are interpreted.

When the extended set is disabled, addresses embedded in opcodes are treated as literal memory locations: either as a location in the Access Bank (a = 0) or in a GPR bank designated by the BSR (a = 1). When the extended instruction set is enabled and a = 0, however, a file register argument of 5Fh or less is interpreted as an offset from the pointer value in FSR2 and not as a literal address. For practical purposes, this means that all instructions that use the Access RAM bit as an argument – that is, all byte-oriented and bit-oriented instructions, or almost half of the core PIC18 instructions – may behave differently when the extended instruction set is enabled.

When the content of FSR2 is 00h, the boundaries of the Access RAM are essentially remapped to their original values. This may be useful in creating backward-compatible code. If this technique is used, it may be necessary to save the value of FSR2 and restore it when moving back and forth between C and assembly routines in order to preserve the Stack Pointer. Users must also keep in mind the syntax requirements of the extended instruction set (see **Section 26.2.3.1 "Extended Instruction Syntax with Standard PIC18 Commands"**).

Although the Indexed Literal Offset Addressing mode can be very useful for dynamic stack and pointer manipulation, it can also be very annoying if a simple arithmetic operation is carried out on the wrong register. Users who are accustomed to the PIC18 programming must keep in mind that, when the extended instruction set is enabled, register addresses of 5Fh or less are used for Indexed Literal Offset Addressing.

Representative examples of typical byte-oriented and bit-oriented instructions in the Indexed Literal Offset Addressing mode are provided on the following page to show how execution is affected. The operand conditions shown in the examples are applicable to all instructions of these types.

26.2.3.1 Extended Instruction Syntax with Standard PIC18 Commands

When the extended instruction set is enabled, the file register argument 'f' in the standard byte-oriented and bit-oriented commands is replaced with the literal offset value 'k'. As already noted, this occurs only when 'f' is less than or equal to 5Fh. When an offset value is used, it must be indicated by square brackets ("[ ]"). As with the extended instructions, the use of brackets indicates to the compiler that the value is to be interpreted as an index or an offset. Omitting the brackets, or using a value greater than 5Fh within the brackets, will generate an error in the MPASM Assembler.

If the index argument is properly bracketed for Indexed Literal Offset Addressing, the Access RAM argument is never specified; it will automatically be assumed to be '0'. This is in contrast to standard operation (extended instruction set disabled), when 'a' is set on the basis of the target address. Declaring the Access RAM bit in this mode will also generate an error in the MPASM Assembler.

The destination argument 'd' functions as before.

In the latest versions of the MPASM Assembler, language support for the extended instruction set must be explicitly invoked. This is done with either the command line option, /y, or the PE directive in the source listing.

26.2.4 CONSIDERATIONS WHEN ENABLING THE EXTENDED INSTRUCTION SET

It is important to note that the extensions to the instruction set may not be beneficial to all users. In particular, users who are not writing code that uses a software stack may not benefit from using the extensions to the instruction set.

Additionally, the Indexed Literal Offset Addressing mode may create issues with legacy applications written to the PIC18 assembler. This is because instructions in the legacy code may attempt to address registers in the Access Bank below 5Fh. Since these addresses are interpreted as literal offsets to FSR2 when the instruction set extension is enabled, the application may read or write to the wrong data addresses.

When porting an application to the PIC18F8722 family, it is very important to consider the type of code. A large, re-entrant application that is written in C and would benefit from efficient compilation will do well when using the instruction set extensions. Legacy applications that heavily use the Access Bank will most likely not benefit from using the extended instruction set.

© 2008 Microchip Technology Inc.

ADDWF	ADD W to Indexed (Indexed Literal Offset mode)
Syntax:	ADDWF [k] {,d}
Operands:	$0 \le k \le 95$ $d \in [0,1]$
Operation:	(W) + ((FSR2) + k) → dest
Status Affected:	N, OV, C, DC, Z
Encoding:	0010 | 01d0 | kkkk | kkkk
Description:	The contents of W are added to the contents of the register indicated by FSR2, offset by the value 'k'. If 'd' is '0', the result is stored in W. If 'd' is '1', the result is stored back in register 'f' (default).
Words:	1
Cycles:	1

Q Cycle Activity:

Q1	Q2	Q3	Q4
Decode	Read 'k'	Process Data	Write to destination

Example: `ADDWF [OFST],0`

Before Instruction
- W = 17h
- OFST = 2Ch
- FSR2 = 0A00h
- Contents of 0A2Ch = 20h

After Instruction
- W = 37h
- Contents of 0A2Ch = 20h

BSF	Bit Set Indexed (Indexed Literal Offset mode)
Syntax:	BSF [k], b
Operands:	$0 \le f \le 95$ $0 \le b \le 7$
Operation:	1 → ((FSR2) + k)<b>
Status Affected:	None
Encoding:	1000 | bbb0 | kkkk | kkkk
Description:	Bit 'b' of the register indicated by FSR2, offset by the value 'k', is set.
Words:	1
Cycles:	1

Q Cycle Activity:

Q1	Q2	Q3	Q4
Decode	Read register 'f'	Process Data	Write to destination

Example: `BSF [FLAG_OFST], 7`

Before Instruction
- FLAG_OFST = 0Ah
- FSR2 = 0A00h
- Contents of 0A0Ah = 55h

After Instruction
- Contents of 0A0Ah = D5h

SETF	Set Indexed (Indexed Literal Offset mode)
Syntax:	SETF [k]
Operands:	$0 \le k \le 95$
Operation:	FFh → ((FSR2) + k)
Status Affected:	None
Encoding:	0110 | 1000 | kkkk | kkkk
Description:	The contents of the register indicated by FSR2, offset by 'k', are set to FFh.
Words:	1
Cycles:	1

Q Cycle Activity:

Q1	Q2	Q3	Q4
Decode	Read 'k'	Process Data	Write register

Example: `SETF [OFST]`

Before Instruction
- OFST = 2Ch
- FSR2 = 0A00h
- Contents of 0A2Ch = 00h

After Instruction
- Contents of 0A2Ch = FFh

© 2008 Microchip Technology Inc.

26.2.5 SPECIAL CONSIDERATIONS WITH MICROCHIP MPLAB® IDE TOOLS

The latest versions of Microchip's software tools have been designed to fully support the extended instruction set for the PIC18F8722 family. This includes the MPLAB C18 C Compiler, MPASM assembly language and MPLAB Integrated Development Environment (IDE).

When selecting a target device for software development, MPLAB IDE will automatically set default Configuration bits for that device. The default setting for the XINST Configuration is '0', disabling the extended instruction set and Indexed Literal Offset Addressing mode. For proper execution of applications developed to take advantage of the extended instruction set, XINST must be set during programming.

To develop software for the extended instruction set, the user must enable support for the instructions and the Indexed Addressing mode in their language tool(s). Depending on the environment being used, this may be done in several ways:

- A menu option or dialog box within the environment that allows the user to configure the language tool and its settings for the project
- A command line option
- A directive in the source code

These options vary between different compilers, assemblers and development environments. Users are encouraged to review the documentation accompanying their development systems for the appropriate information.

© 2008 Microchip Technology Inc.

27.0 DEVELOPMENT SUPPORT

The PIC® microcontrollers are supported with a full range of hardware and software development tools:

- Integrated Development Environment
  - MPLAB® IDE Software
- Assemblers/Compilers/Linkers
  - MPASM™ Assembler
  - MPLAB C18 and MPLAB C30 C Compilers
  - MPLINK™ Object Linker/ MPLIB™ Object Librarian
  - MPLAB ASM30 Assembler/Linker/Library
- Simulators
  - MPLAB SIM Software Simulator
- Emulators
  - MPLAB ICE 2000 In-Circuit Emulator
  - MPLAB REAL ICE™ In-Circuit Emulator
- In-Circuit Debugger
  - MPLAB ICD 2
- Device Programmers
  - PICSTART® Plus Development Programmer
  - MPLAB PM3 Device Programmer
  - PICkit™ 2 Development Programmer
- Low-Cost Demonstration and Development Boards and Evaluation Kits

27.1 MPLAB Integrated Development Environment Software

The MPLAB IDE software brings an ease of software development previously unseen in the 8/16-bit micro-controller market. The MPLAB IDE is a Windows® operating system-based application that contains:

- A single graphical interface to all debugging tools
  - Simulator
  - Programmer (sold separately)
  - Emulator (sold separately)
  - In-Circuit Debugger (sold separately)
- A full-featured editor with color-coded context
- A multiple project manager
- Customizable data windows with direct edit of contents
- High-level source code debugging
- Visual device initializer for easy register initialization
- Mouse over variable inspection
- Drag and drop variables from source to watch windows
- Extensive on-line help
- Integration of select third party tools, such as HI-TECH Software C Compilers and IAR C Compilers

The MPLAB IDE allows you to:

- Edit your source files (either assembly or C)
- One touch assemble (or compile) and download to PIC MCU emulator and simulator tools (automatically updates all project information)
- Debug using:
  - Source files (assembly or C)
  - Mixed assembly and C
  - Machine code

MPLAB IDE supports multiple debugging tools in a single development paradigm, from the cost-effective simulators, through low-cost in-circuit debuggers, to full-featured emulators. This eliminates the learning curve when upgrading to tools with increased flexibility and power.

27.2 MPASM Assembler

The MPASM Assembler is a full-featured, universal macro assembler for all PIC MCUs.

The MPASM Assembler generates relocatable object files for the MPLINK Object Linker, Intel® standard HEX files, MAP files to detail memory usage and symbol reference, absolute LST files that contain source lines and generated machine code and COFF files for debugging.

The MPASM Assembler features include:

- Integration into MPLAB IDE projects
- User-defined macros to streamline assembly code
- Conditional assembly for multi-purpose source files
- Directives that allow complete control over the assembly process

27.3 MPLAB C18 and MPLAB C30 C Compilers

The MPLAB C18 and MPLAB C30 Code Development Systems are complete ANSI C compilers for Microchip's PIC18 and PIC24 families of microcontrollers and the dsPIC30 and dsPIC33 family of digital signal controllers. These compilers provide powerful integration capabilities, superior code optimization and ease of use not found with other compilers.

For easy source level debugging, the compilers provide symbol information that is optimized to the MPLAB IDE debugger.

27.4 MPLINK Object Linker/ MPLIB Object Librarian

The MPLINK Object Linker combines relocatable objects created by the MPASM Assembler and the MPLAB C18 C Compiler. It can link relocatable objects from precompiled libraries, using directives from a linker script.

The MPLIB Object Librarian manages the creation and modification of library files of precompiled code. When a routine from a library is called from a source file, only the modules that contain that routine will be linked in with the application. This allows large libraries to be used efficiently in many different applications.

The object linker/library features include:

- Efficient linking of single libraries instead of many smaller files
- Enhanced code maintainability by grouping related modules together
- Flexible creation of libraries with easy module listing, replacement, deletion and extraction

27.5 MPLAB ASM30 Assembler, Linker and Librarian

MPLAB ASM30 Assembler produces relocatable machine code from symbolic assembly language for dsPIC30F devices. MPLAB C30 C Compiler uses the assembler to produce its object file. The assembler generates relocatable object files that can then be archived or linked with other relocatable object files and archives to create an executable file. Notable features of the assembler include:

- Support for the entire dsPIC30F instruction set
- Support for fixed-point and floating-point data
- Command line interface
- Rich directive set
- Flexible macro language
- MPLAB IDE compatibility

27.6 MPLAB SIM Software Simulator

The MPLAB SIM Software Simulator allows code development in a PC-hosted environment by simulating the PIC MCUs and dsPIC® DSCs on an instruction level. On any given instruction, the data areas can be examined or modified and stimuli can be applied from a comprehensive stimulus controller. Registers can be logged to files for further run-time analysis. The trace buffer and logic analyzer display extend the power of the simulator to record and track program execution, actions on I/O, most peripherals and internal registers.

The MPLAB SIM Software Simulator fully supports symbolic debugging using the MPLAB C18 and MPLAB C30 C Compilers, and the MPASM and MPLAB ASM30 Assemblers. The software simulator offers the flexibility to develop and debug code outside of the hardware laboratory environment, making it an excellent, economical software development tool.

© 2008 Microchip Technology Inc.

27.7 MPLAB ICE 2000 High-Performance In-Circuit Emulator

The MPLAB ICE 2000 In-Circuit Emulator is intended to provide the product development engineer with a complete microcontroller design tool set for PIC microcontrollers. Software control of the MPLAB ICE 2000 In-Circuit Emulator is advanced by the MPLAB Integrated Development Environment, which allows editing, building, downloading and source debugging from a single environment.

The MPLAB ICE 2000 is a full-featured emulator system with enhanced trace, trigger and data monitoring features. Interchangeable processor modules allow the system to be easily reconfigured for emulation of different processors. The architecture of the MPLAB ICE 2000 In-Circuit Emulator allows expansion to support new PIC microcontrollers.

The MPLAB ICE 2000 In-Circuit Emulator system has been designed as a real-time emulation system with advanced features that are typically found on more expensive development tools. The PC platform and Microsoft® Windows® 32-bit operating system were chosen to best make these features available in a simple, unified application.

27.8 MPLAB REAL ICE In-Circuit Emulator System

MPLAB REAL ICE In-Circuit Emulator System is Microchip's next generation high-speed emulator for Microchip Flash DSC and MCU devices. It debugs and programs PIC® Flash MCUs and dsPIC® Flash DSCs with the easy-to-use, powerful graphical user interface of the MPLAB Integrated Development Environment (IDE), included with each kit.

The MPLAB REAL ICE probe is connected to the design engineer's PC using a high-speed USB 2.0 interface and is connected to the target with either a connector compatible with the popular MPLAB ICD 2 system (RJ11) or with the new high-speed, noise tolerant, Low-Voltage Differential Signal (LVDS) interconnection (CAT5).

MPLAB REAL ICE is field upgradeable through future firmware downloads in MPLAB IDE. In upcoming releases of MPLAB IDE, new devices will be supported, and new features will be added, such as software breakpoints and assembly code trace. MPLAB REAL ICE offers significant advantages over competitive emulators including low-cost, full-speed emulation, real-time variable watches, trace analysis, complex breakpoints, a ruggedized probe interface and long (up to three meters) interconnection cables.

27.9 MPLAB ICD 2 In-Circuit Debugger

Microchip's In-Circuit Debugger, MPLAB ICD 2, is a powerful, low-cost, run-time development tool, connecting to the host PC via an RS-232 or high-speed USB interface. This tool is based on the Flash PIC MCUs and can be used to develop for these and other PIC MCUs and dsPIC DSCs. The MPLAB ICD 2 utilizes the in-circuit debugging capability built into the Flash devices. This feature, along with Microchip's In-Circuit Serial Programming™ (ICSP™) protocol, offers cost-effective, in-circuit Flash debugging from the graphical user interface of the MPLAB Integrated Development Environment. This enables a designer to develop and debug source code by setting breakpoints, single stepping and watching variables, and CPU status and peripheral registers. Running at full speed enables testing hardware and applications in real time. MPLAB ICD 2 also serves as a development programmer for selected PIC devices.

27.10 MPLAB PM3 Device Programmer

The MPLAB PM3 Device Programmer is a universal, CE compliant device programmer with programmable voltage verification at V_{DDMIN} and V_{DDMAX} for maximum reliability. It features a large LCD display (128 x 64) for menus and error messages and a modular, detachable socket assembly to support various package types. The ICSP™ cable assembly is included as a standard item. In Stand-Alone mode, the MPLAB PM3 Device Programmer can read, verify and program PIC devices without a PC connection. It can also set code protection in this mode. The MPLAB PM3 connects to the host PC via an RS-232 or USB cable. The MPLAB PM3 has high-speed communications and optimized algorithms for quick programming of large memory devices and incorporates an SD/MMC card for file storage and secure data applications.

27.11 PICSTART® Plus Development Programmer

The PICSTART® Plus Development Programmer is an easy-to-use, low-cost, prototype programmer. It connects to the PC via a COM (RS-232) port. MPLAB Integrated Development Environment software makes using the programmer simple and efficient. The PICSTART Plus Development Programmer supports most PIC devices in DIP packages up to 40 pins. Larger pin count devices, such as the PIC16C92X and PIC17C76X, may be supported with an adapter socket. The PICSTART Plus Development Programmer is CE compliant.

27.12 PICkit™ 2 Development Programmer

The PICkit™ 2 Development Programmer is a low-cost programmer and selected Flash device debugger with an easy-to-use interface for programming many of Microchip's baseline, mid-range and PIC18F families of Flash memory microcontrollers. The PICkit 2 Starter Kit includes a prototyping development board, twelve sequential lessons, software and HI-TECH's PICC™ Lite C compiler, and is designed to help get up to speed quickly using PIC® microcontrollers. The kit provides everything needed to program, evaluate and develop applications using Microchip's powerful, mid-range Flash memory family of microcontrollers.

27.13 Demonstration, Development and Evaluation Boards

A wide variety of demonstration, development and evaluation boards for various PIC MCUs and dsPIC DSCs allows quick application development on fully functional systems. Most boards include prototyping areas for adding custom circuitry and provide application firmware and source code for examination and modification.

The boards support a variety of features, including LEDs, temperature sensors, switches, speakers, RS-232 interfaces, LCD displays, potentiometers and additional EEPROM memory.

The demonstration and development boards can be used in teaching environments, for prototyping custom circuits and for learning about various microcontroller applications.

In addition to the PICDEM™ and dsPICDEM™ demonstration/development board series of circuits, Microchip has a line of evaluation kits and demonstration software for analog filter design, KEELOQ® security ICs, CAN, IrDA®, PowerSmart battery management, SEEVAL® evaluation system, Sigma-Delta ADC, flow rate sensing, plus many more.

Check the Microchip web page (www.microchip.com) for the complete list of demonstration, development and evaluation kits.

© 2008 Microchip Technology Inc.

28.0 ELECTRICAL CHARACTERISTICS

Absolute Maximum Ratings(†)

Ambient temperature under bias ..... -40°C to +125°C
Storage temperature ..... -65°C to +150°C
Voltage on any pin with respect to V_{SS} (except V_{DD} and $\overline{MCLR}$) ..... -0.3V to (V_{DD} + 0.3V)
Voltage on V_{DD} with respect to V_{SS} ..... -0.3V to +7.5V
Voltage on $\overline{MCLR}$ with respect to V_{SS} **(Note 2)** ..... 0V to +13.25V
Total power dissipation **(Note 1)** 1.0W
Maximum current out of V_{SS} pin ..... 300 mA
Maximum current into V_{DD} pin ..... 250 mA
Input clamp current, I_{IK} (V_I < 0 or V_I > V_{DD}) ..... ±20 mA
Output clamp current, I_{OK} (V_O < 0 or V_O > V_{DD}) ..... ±20 mA
Maximum output current sunk by any I/O pin ..... 25 mA
Maximum output current sourced by any I/O pin ..... 25 mA
Maximum current sunk by all ports ..... 200 mA
Maximum current sourced by all ports ..... 200 mA

Note 1: Power dissipation is calculated as follows:
$P_{dis} = V_{DD} \times \{I_{DD} - \sum I_{OH}\} + \sum \{(V_{DD} - V_{OH}) \times I_{OH}\} + \sum(V_{OL} \times I_{OL})$

2: Voltage spikes below V_{SS} at the RG5/$\overline{MCLR}$/V_{PP} pin, inducing currents greater than 80 mA, may cause latch-up. Thus, a series resistor of 50-100Ω should be used when applying a “low” level to the RG5/$\overline{MCLR}$/V_{PP} pin, rather than pulling this pin directly to V_{SS}.

† **NOTICE:** Stresses above those listed under “Absolute Maximum Ratings” may cause permanent damage to the device. This is a stress rating only and functional operation of the device at those or any other conditions above those indicated in the operation listings of this specification is not implied. Exposure to maximum rating conditions for extended periods may affect device reliability.

FIGURE 28-1: PIC18F8722 DEVICE FAMILY VOLTAGE-FREQUENCY GRAPH (INDUSTRIAL)

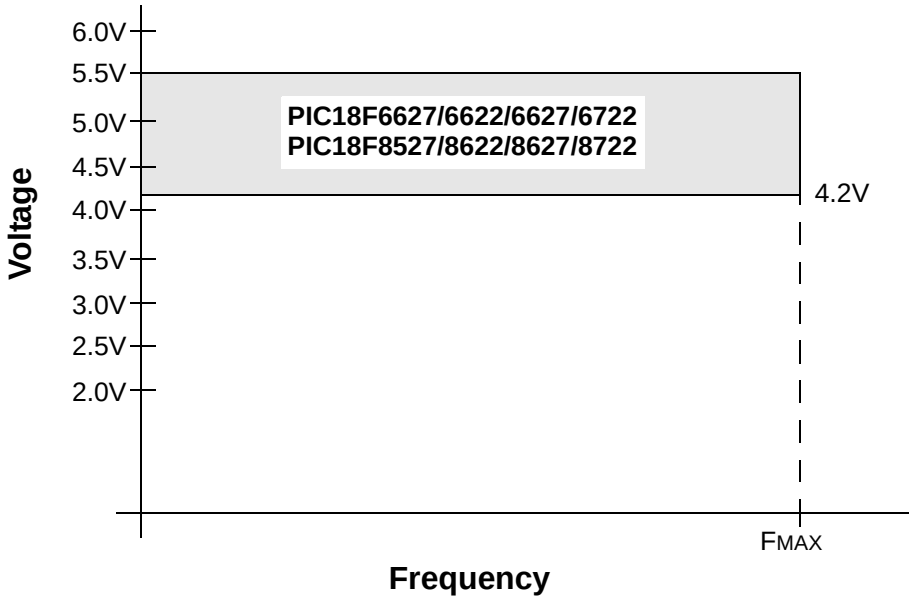

FMAX = 20 MHz in 8-bit External Memory mode.
FMAX = 40 MHz in all other modes.

FIGURE 28-2: PIC18F8722 DEVICE FAMILY VOLTAGE-FREQUENCY GRAPH (EXTENDED)

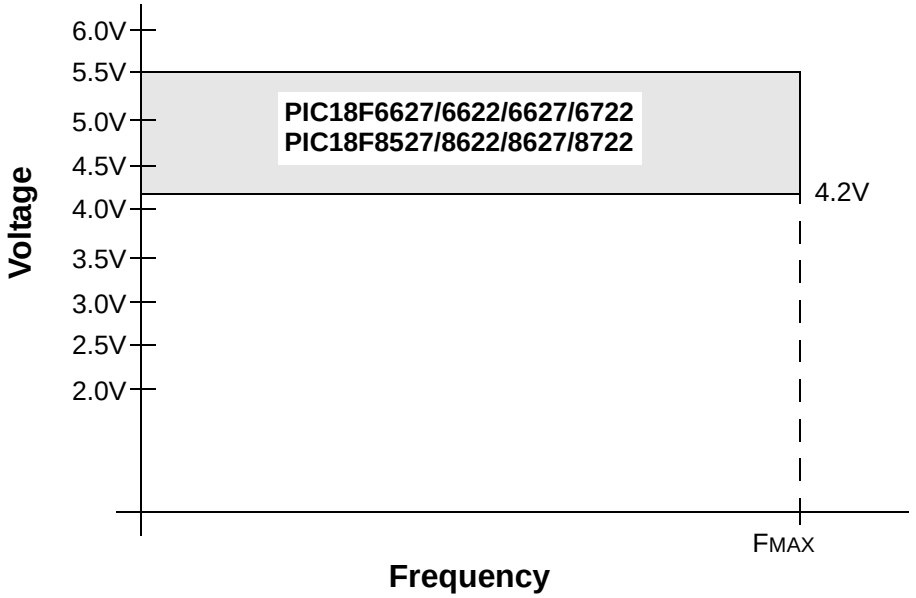

FMAX = 20 MHz in 8-bit External Memory mode.
FMAX = 25 MHz in all other modes.

© 2008 Microchip Technology Inc.

FIGURE 28-3: PIC18LF8722 DEVICE FAMILY VOLTAGE-FREQUENCY GRAPH (INDUSTRIAL)

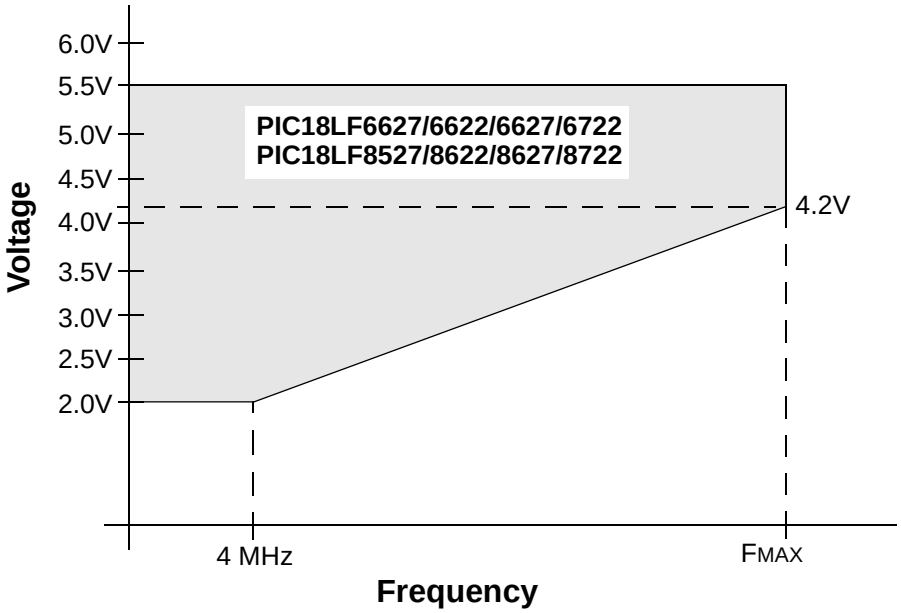

In 8-bit External Memory mode:
F_{MAX} = (9.55 MHz/V) ($V_{DDAPPMIN}$ – 2.0V) + 4 MHz, if $V_{DDAPPMIN} \leq$ 4.2V;
F_{MAX} = 25 MHz, if $V_{DDAPPMIN}$ > 4.2V.

In all other modes:
F_{MAX} = (16.36 MHz/V) ($V_{DDAPPMIN}$ – 2.0V) + 4 MHz;
F_{MAX} = 40 MHz, if $V_{DDAPPMIN}$ > 4.2V.

Note: $V_{DDAPPMIN}$ is the minimum voltage of the PIC® device in the application.

28.1 DC Characteristics: Supply Voltage PIC18F6X27/6X22/8X27/8X22 (Industrial, Extended) PIC18LF6X27/6X22/8X27/8X22 (Industrial)

PIC18LF6X27/6X22/8X27/8X22 (Industrial)	**Standard Operating Conditions (unless otherwise stated)** Operating temperature -40°C ≤ TA ≤ +85°C for industrial
PIC18F6X27/6X22/8X27/8X22 (Industrial, Extended)	**Standard Operating Conditions (unless otherwise stated)** Operating temperature -40°C ≤ TA ≤ +85°C for industrial -40°C ≤ TA ≤ +125°C for extended

Param No.	Symbol	Characteristic	Min	Typ	Max	Units	Conditions
D001	VDD	**Supply Voltage**					
		PIC18LF6X27/6X22/8X27/8X22	2.0	—	5.5	V	
		PIC18F6X27/6X22/8X27/8X22	4.2	—	5.5	V	
D002	VDR	**RAM Data Retention Voltage(1)**	1.5	—	—	V	
D003	VPOR	**VDD Start Voltage** to Ensure Internal Power-on Reset Signal	—	—	0.7	V	See **Section 4.3 "Power-on Reset (POR)"** for details
D004	SVDD	**VDD Rise Rate** to Ensure Internal Power-on Reset Signal	0.05	—	—	V/ms	See **Section 4.3 "Power-on Reset (POR)"** for details
D005	VBOR	**Brown-out Reset Voltage**					
		BORV<1:0> = 11	2.00	2.05	2.16	V	PIC18LF6627/6722/8627/8722
		BORV<1:0> = 11	2.00	2.11	2.22	V	PIC18LF6527/6622/8527/8622
		BORV<1:0> = 10	2.65	2.79	2.93	V	PIC18LF6X27/6X22/8X27/8X22
		BORV<1:0> = 01(2)	4.11	4.33	4.55	V	All devices
		BORV<1:0> = 00	4.36	4.59	4.82	V	All devices

Legend: Shading of rows is to assist in readability of the table.

Note 1: This is the limit to which VDD can be lowered in Sleep mode, or during a device Reset, without losing RAM data.

2: With BOR enabled, full-speed operation (FOSC = 40 MHz) is supported until a BOR occurs. The VDD may be below the minimum voltage for this frequency.

© 2008 Microchip Technology Inc.

28.2 DC Characteristics: Power-Down and Supply Current PIC18F6X27/6X22/8X27/8X22 (Industrial, Extended) PIC18LF6X27/6X22/8X27/8X22 (Industrial)

PIC18LF6X27/6X22/8X27/8X22 (Industrial)	**Standard Operating Conditions (unless otherwise stated)** Operating temperature -40°C ≤ TA ≤ +85°C for industrial
PIC18F6X27/6X22/8X27/8X22 (Industrial, Extended)	**Standard Operating Conditions (unless otherwise stated)** Operating temperature -40°C ≤ TA ≤ +85°C for industrial -40°C ≤ TA ≤ +125°C for extended

Param No.	Device	Typ	Max	Units	Conditions	
	Power-Down Current (IPD)(1)					
	PIC18LF6X27/6X22/8X27/8X22	120	700	nA	-40°C	VDD = 2.0V (**Sleep** mode)
		120	700	nA	+25°C	
		0.24	3.0	μA	+85°C	
	PIC18LF6X27/6X22/8X27/8X22	120	900	nA	-40°C	VDD = 3.0V (**Sleep** mode)
		120	900	nA	+25°C	
		0.36	6	μA	+85°C	
	All devices	0.12	2	μA	-40°C	VDD = 5.0V (**Sleep** mode)
		0.12	2	μA	+25°C	
		0.48	9	μA	+85°C	
	Extended devices only	12	100	μA	+125°C	

Legend: Shading of rows is to assist in readability of the table.

Note 1: The power-down current in Sleep mode does not depend on the oscillator type. Power-down current is measured with the part in Sleep mode, with all I/O pins in high-impedance state and tied to VDD or VSS and all features that add delta current disabled (such as WDT, Timer1 Oscillator, BOR, etc.).

2: The supply current is mainly a function of operating voltage, frequency and mode. Other factors, such as I/O pin loading and switching rate, oscillator type and circuit, internal code execution pattern and temperature, also have an impact on the current consumption.
The test conditions for all IDD measurements in active operation mode are:
OSC1 = external square wave, from rail-to-rail; all I/O pins tri-stated, pulled to VDD OR VSS;
$\overline{\text{MCLR}}$ = VDD; WDT enabled/disabled as specified.

3: When operation below -10°C is expected, use T1OSC High-Power mode, where LPT1OSC (CONFIG3H<2>) = 0. When operation will always be above -10°C, then the low-power Timer1 oscillator may be selected.

4: BOR and HLVD enable internal band gap reference. With both modules enabled, current consumption will be less than the sum of both specifications.

28.2 DC Characteristics: Power-Down and Supply Current PIC18F6X27/6X22/8X27/8X22 (Industrial, Extended) PIC18LF6X27/6X22/8X27/8X22 (Industrial) (Continued)

PIC18LF6X27/6X22/8X27/8X22 (Industrial)	**Standard Operating Conditions (unless otherwise stated)** Operating temperature -40°C ≤ TA ≤ +85°C for industrial
PIC18F6X27/6X22/8X27/8X22 (Industrial, Extended)	**Standard Operating Conditions (unless otherwise stated)** Operating temperature -40°C ≤ TA ≤ +85°C for industrial -40°C ≤ TA ≤ +125°C for extended

Param No.	Device	Typ	Max	Units	Conditions		
	Supply Current (IDD)(2)						
	PIC18LF6X27/6X22/8X27/8X22	18	25	μA	-40°C	VDD = 2.0V	FOSC = 31 kHz (**RC_RUN** mode, Internal oscillator source)
		18	22	μA	+25°C		
		18	25	μA	+85°C		
	PIC18LF6X27/6X22/8X27/8X22	48	70	μA	-40°C	VDD = 3.0V	
		42	50	μA	+25°C		
		36	47	μA	+85°C		
	All devices	126	180	μA	-40°C	VDD = 5.0V	
		108	150	μA	+25°C		
		96	140	μA	+85°C		
	Extended devices only	96	230	μA	+125°C		
	PIC18LF6X27/6X22/8X27/8X22	380	440	μA	-40°C	VDD = 2.0V	FOSC = 1 MHz (**RC_RUN** mode, Internal oscillator source)
		380	440	μA	+25°C		
		380	440	μA	+85°C		
	PIC18LF6X27/6X22/8X27/8X22	720	800	μA	-40°C	VDD = 3.0V	
		700	740	μA	+25°C		
		720	740	μA	+85°C		
	All devices	1.2	1.4	mA	-40°C	VDD = 5.0V	
		1.2	1.3	mA	+25°C		
		1.2	1.3	mA	+85°C		
	Extended devices only	1.2	1.4	mA	+125°C		

Legend: Shading of rows is to assist in readability of the table.

Note 1: The power-down current in Sleep mode does not depend on the oscillator type. Power-down current is measured with the part in Sleep mode, with all I/O pins in high-impedance state and tied to VDD or VSS and all features that add delta current disabled (such as WDT, Timer1 Oscillator, BOR, etc.).

2: The supply current is mainly a function of operating voltage, frequency and mode. Other factors, such as I/O pin loading and switching rate, oscillator type and circuit, internal code execution pattern and temperature, also have an impact on the current consumption.
The test conditions for all IDD measurements in active operation mode are:
OSC1 = external square wave, from rail-to-rail; all I/O pins tri-stated, pulled to VDD OR VSS;
MCLR = VDD; WDT enabled/disabled as specified.

3: When operation below -10°C is expected, use T1OSC High-Power mode, where LPT1OSC (CONFIG3H<2>) = 0. When operation will always be above -10°C, then the low-power Timer1 oscillator may be selected.

4: BOR and HLVD enable internal band gap reference. With both modules enabled, current consumption will be less than the sum of both specifications.

© 2008 Microchip Technology Inc.

28.2 DC Characteristics: Power-Down and Supply Current PIC18F6X27/6X22/8X27/8X22 (Industrial, Extended) PIC18LF6X27/6X22/8X27/8X22 (Industrial) (Continued)

PIC18LF6X27/6X22/8X27/8X22 (Industrial)		**Standard Operating Conditions (unless otherwise stated)** Operating temperature -40°C ≤ TA ≤ +85°C for industrial					
PIC18F6X27/6X22/8X27/8X22 (Industrial, Extended)		**Standard Operating Conditions (unless otherwise stated)** Operating temperature -40°C ≤ TA ≤ +85°C for industrial -40°C ≤ TA ≤ +125°C for extended					
Param No.	**Device**	**Typ**	**Max**	**Units**	**Conditions**		
	Supply Current (IDD)(2)						
	PIC18LF6X27/6X22/8X27/8X22	1.0	1.3	mA	-40°C	VDD = 2.0V	FOSC = 4 MHz (**RC_RUN** mode, Internal oscillator source)
		1.0	1.3	mA	+25°C		
		1.0	1.3	mA	+85°C		
	PIC18LF6X27/6X22/8X27/8X22	1.6	1.9	mA	-40°C	VDD = 3.0V	
		1.6	1.9	mA	+25°C		
		1.6	1.9	mA	+85°C		
	All devices	3.0	3.5	mA	-40°C	VDD = 5.0V	
		3.0	3.4	mA	+25°C		
		3.0	3.4	mA	+85°C		
	Extended devices only	3.0	3.4	mA	+125°C		
	PIC18LF6X27/6X22/8X27/8X22	3.5	5	μA	-40°C	VDD = 2.0V	FOSC = 31 kHz (**RC_IDLE** mode, Internal oscillator source)
		3.7	5	μA	+25°C		
		4.3	9.5	μA	+85°C		
	PIC18LF6X27/6X22/8X27/8X22	5.4	7	μA	-40°C	VDD = 3.0V	
		5.7	8	μA	+25°C		
		7.0	15	μA	+85°C		
	All devices	11	15	μA	-40°C	VDD = 5.0V	
		11.8	15	μA	+25°C		
		13.5	35	μA	+85°C		
	Extended devices only	25	200	μA	+125°C		

Legend: Shading of rows is to assist in readability of the table.

Note 1: The power-down current in Sleep mode does not depend on the oscillator type. Power-down current is measured with the part in Sleep mode, with all I/O pins in high-impedance state and tied to VDD or VSS and all features that add delta current disabled (such as WDT, Timer1 Oscillator, BOR, etc.).

2: The supply current is mainly a function of operating voltage, frequency and mode. Other factors, such as I/O pin loading and switching rate, oscillator type and circuit, internal code execution pattern and temperature, also have an impact on the current consumption.
The test conditions for all IDD measurements in active operation mode are:
OSC1 = external square wave, from rail-to-rail; all I/O pins tri-stated, pulled to VDD OR VSS;
$\overline{\text{MCLR}}$ = VDD; WDT enabled/disabled as specified.

3: When operation below -10°C is expected, use T1OSC High-Power mode, where LPT1OSC (CONFIG3H<2>) = 0. When operation will always be above -10°C, then the low-power Timer1 oscillator may be selected.

4: BOR and HLVD enable internal band gap reference. With both modules enabled, current consumption will be less than the sum of both specifications.

28.2 DC Characteristics: Power-Down and Supply Current PIC18F6X27/6X22/8X27/8X22 (Industrial, Extended) PIC18LF6X27/6X22/8X27/8X22 (Industrial) (Continued)

PIC18LF6X27/6X22/8X27/8X22 (Industrial)	Standard Operating Conditions (unless otherwise stated) Operating temperature -40°C ≤ TA ≤ +85°C for industrial
PIC18F6X27/6X22/8X27/8X22 (Industrial, Extended)	Standard Operating Conditions (unless otherwise stated) Operating temperature -40°C ≤ TA ≤ +85°C for industrial -40°C ≤ TA ≤ +125°C for extended

Param No.	Device	Typ	Max	Units	Conditions		
	Supply Current (IDD)(2)						
	PIC18LF6X27/6X22/8X27/8X22	200	250	μA	-40°C	VDD = 2.0V	FOSC = 1 MHz (**RC_IDLE** mode, Internal oscillator source)
		210	250	μA	+25°C		
		228	270	μA	+85°C		
	PIC18LF6X27/6X22/8X27/8X22	300	360	μA	-40°C	VDD = 3.0V	
		324	360	μA	+25°C		
		350	380	μA	+85°C		
	All devices	500	600	μA	-40°C	VDD = 5.0V	
		520	600	μA	+25°C		
		550	620	μA	+85°C		
	Extended devices only	720	800	μA	+125°C		
	PIC18LF6X27/6X22/8X27/8X22	410	500	μA	-40°C	VDD = 2.0V	FOSC = 4 MHz (**RC_IDLE** mode, Internal oscillator source)
		420	490	μA	+25°C		
		430	490	μA	+85°C		
	PIC18LF6X27/6X22/8X27/8X22	630	800	μA	-40°C	VDD = 3.0V	
		650	790	μA	+25°C		
		690	800	μA	+85°C		
	All devices	1.2	1.4	mA	-40°C	VDD = 5.0V	
		1.3	1.4	mA	+25°C		
		1.2	1.4	mA	+85°C		
	Extended devices only	1.2	1.6	mA	+125°C		

Legend: Shading of rows is to assist in readability of the table.

Note 1: The power-down current in Sleep mode does not depend on the oscillator type. Power-down current is measured with the part in Sleep mode, with all I/O pins in high-impedance state and tied to VDD or VSS and all features that add delta current disabled (such as WDT, Timer1 Oscillator, BOR, etc.).

2: The supply current is mainly a function of operating voltage, frequency and mode. Other factors, such as I/O pin loading and switching rate, oscillator type and circuit, internal code execution pattern and temperature, also have an impact on the current consumption.
The test conditions for all IDD measurements in active operation mode are:
OSC1 = external square wave, from rail-to-rail; all I/O pins tri-stated, pulled to VDD OR VSS;
MCLR = VDD; WDT enabled/disabled as specified.

3: When operation below -10°C is expected, use T1OSC High-Power mode, where LPT1OSC (CONFIG3H<2>) = 0. When operation will always be above -10°C, then the low-power Timer1 oscillator may be selected.

4: BOR and HLVD enable internal band gap reference. With both modules enabled, current consumption will be less than the sum of both specifications.

© 2008 Microchip Technology Inc.

28.2 DC Characteristics: Power-Down and Supply Current PIC18F6X27/6X22/8X27/8X22 (Industrial, Extended) PIC18LF6X27/6X22/8X27/8X22 (Industrial) (Continued)

PIC18LF6X27/6X22/8X27/8X22 (Industrial)		**Standard Operating Conditions (unless otherwise stated)** Operating temperature -40°C ≤ TA ≤ +85°C for industrial					
PIC18F6X27/6X22/8X27/8X22 (Industrial, Extended)		**Standard Operating Conditions (unless otherwise stated)** Operating temperature -40°C ≤ TA ≤ +85°C for industrial -40°C ≤ TA ≤ +125°C for extended					
Param No.	**Device**	**Typ**	**Max**	**Units**	**Conditions**		
	Supply Current (IDD)(2)						
	PIC18LF6X27/6X22/8X27/8X22	300	350	μA	-40°C	VDD = 2.0V	FOSC = 1 MHz (**PRI_RUN** mode, EC oscillator)
		310	350	μA	+25°C		
		300	350	μA	+85°C		
	PIC18LF6X27/6X22/8X27/8X22	660	800	μA	-40°C	VDD = 3.0V	
		580	700	μA	+25°C		
		550	670	μA	+85°C		
	All devices	1.2	1.75	mA	-40°C	VDD = 5.0V	
		1.1	1.4	mA	+25°C		
		1.0	1.3	mA	+85°C		
	Extended devices only	1.0	1.4	mA	+125°C		
	PIC18LF6X27/6X22/8X27/8X22	0.86	1.2	mA	-40°C	VDD = 2.0V	FOSC = 4 MHz (**PRI_RUN** mode, EC oscillator)
		0.88	1.2	mA	+25°C		
		0.88	1.2	mA	+85°C		
	PIC18LF6X27/6X22/8X27/8X22	1.6	1.9	mA	-40°C	VDD = 3.0V	
		1.6	1.8	mA	+25°C		
		1.6	1.8	mA	+85°C		
	All devices	3.2	3.6	mA	-40°C	VDD = 5.0V	
		3.1	3.5	mA	+25°C		
		3.0	3.5	mA	+85°C		
	Extended devices only	3.1	3.5	mA	+125°C		

Legend: Shading of rows is to assist in readability of the table.

Note 1: The power-down current in Sleep mode does not depend on the oscillator type. Power-down current is measured with the part in Sleep mode, with all I/O pins in high-impedance state and tied to VDD or VSS and all features that add delta current disabled (such as WDT, Timer1 Oscillator, BOR, etc.).

2: The supply current is mainly a function of operating voltage, frequency and mode. Other factors, such as I/O pin loading and switching rate, oscillator type and circuit, internal code execution pattern and temperature, also have an impact on the current consumption.
The test conditions for all IDD measurements in active operation mode are:
OSC1 = external square wave, from rail-to-rail; all I/O pins tri-stated, pulled to VDD OR VSS;
$\overline{\text{MCLR}}$ = VDD; WDT enabled/disabled as specified.

3: When operation below -10°C is expected, use T1OSC High-Power mode, where LPT1OSC (CONFIG3H<2>) = 0. When operation will always be above -10°C, then the low-power Timer1 oscillator may be selected.

4: BOR and HLVD enable internal band gap reference. With both modules enabled, current consumption will be less than the sum of both specifications.

28.2 DC Characteristics: Power-Down and Supply Current PIC18F6X27/6X22/8X27/8X22 (Industrial, Extended) PIC18LF6X27/6X22/8X27/8X22 (Industrial) (Continued)

PIC18LF6X27/6X22/8X27/8X22 (Industrial)	Standard Operating Conditions (unless otherwise stated) Operating temperature -40°C ≤ TA ≤ +85°C for industrial
PIC18F6X27/6X22/8X27/8X22 (Industrial, Extended)	**Standard Operating Conditions (unless otherwise stated)** Operating temperature -40°C ≤ TA ≤ +85°C for industrial -40°C ≤ TA ≤ +125°C for extended

Param No.	Device	Typ	Max	Units	Conditions		
	Supply Current (IDD)(2)						
	Extended devices only	10	15	mA	+125°C	VDD = 4.2V	FOSC = 25 MHz (**PRI_RUN** mode, EC oscillator)
		13	18	mA	+125°C	VDD = 5.0V	
	All devices	18	23.5	mA	-40°C	VDD = 4.2V	FOSC = 40 MHz (**PRI_RUN** mode, EC oscillator)
		19	23.5	mA	+25°C		
		19	23.5	mA	+85°C		
	All devices	25	29	mA	-40°C	VDD = 5.0V	
		25	29	mA	+25°C		
		25	29	mA	+85°C		

Legend: Shading of rows is to assist in readability of the table.

Note 1: The power-down current in Sleep mode does not depend on the oscillator type. Power-down current is measured with the part in Sleep mode, with all I/O pins in high-impedance state and tied to VDD or VSS and all features that add delta current disabled (such as WDT, Timer1 Oscillator, BOR, etc.).

2: The supply current is mainly a function of operating voltage, frequency and mode. Other factors, such as I/O pin loading and switching rate, oscillator type and circuit, internal code execution pattern and temperature, also have an impact on the current consumption.
The test conditions for all IDD measurements in active operation mode are:
OSC1 = external square wave, from rail-to-rail; all I/O pins tri-stated, pulled to VDD OR VSS;
MCLR = VDD; WDT enabled/disabled as specified.

3: When operation below -10°C is expected, use T1OSC High-Power mode, where LPT1OSC (CONFIG3H<2>) = 0. When operation will always be above -10°C, then the low-power Timer1 oscillator may be selected.

4: BOR and HLVD enable internal band gap reference. With both modules enabled, current consumption will be less than the sum of both specifications.

© 2008 Microchip Technology Inc.

28.2 DC Characteristics: Power-Down and Supply Current PIC18F6X27/6X22/8X27/8X22 (Industrial, Extended) PIC18LF6X27/6X22/8X27/8X22 (Industrial) (Continued)

PIC18LF6X27/6X22/8X27/8X22 (Industrial)	**Standard Operating Conditions (unless otherwise stated)** Operating temperature -40°C ≤ TA ≤ +85°C for industrial
PIC18F6X27/6X22/8X27/8X22 (Industrial, Extended)	**Standard Operating Conditions (unless otherwise stated)** Operating temperature -40°C ≤ TA ≤ +85°C for industrial -40°C ≤ TA ≤ +125°C for extended

Param No.	Device	Typ	Max	Units	Conditions		
	Supply Current (IDD)(2)						
	All devices	9.0	13	mA	-40°C	VDD = 4.2V	FOSC = 4 MHz, 16 MHz internal (**PRI_RUN HS+PLL**)
		9.0	13	mA	+25°C		
		9.0	13	mA	+85°C		
	Extended devices only	9.6	15	mA	+125°C		
	All devices	12	15	mA	-40°C	VDD = 5.0V	FOSC = 4 MHz, 16 MHz internal (**PRI_RUN HS+PLL**)
		12	15	mA	+25°C		
		12	15	mA	+85°C		
	Extended devices only	12	17	mA	+125°C		
	All devices	18	23.5	mA	-40°C	VDD = 4.2V	FOSC = 10 MHz, 40 MHz internal (**PRI_RUN HS+PLL**)
		19	23.5	mA	+25°C		
		19	23.5	mA	+85°C		
	All devices	25	29	mA	-40°C	VDD = 5.0V	FOSC = 10 MHz, 40 MHz internal (**PRI_RUN HS+PLL**)
		25	29	mA	+25°C		
		25	29	mA	+85°C		

Legend: Shading of rows is to assist in readability of the table.

Note 1: The power-down current in Sleep mode does not depend on the oscillator type. Power-down current is measured with the part in Sleep mode, with all I/O pins in high-impedance state and tied to VDD or VSS and all features that add delta current disabled (such as WDT, Timer1 Oscillator, BOR, etc.).

2: The supply current is mainly a function of operating voltage, frequency and mode. Other factors, such as I/O pin loading and switching rate, oscillator type and circuit, internal code execution pattern and temperature, also have an impact on the current consumption.
The test conditions for all IDD measurements in active operation mode are:
OSC1 = external square wave, from rail-to-rail; all I/O pins tri-stated, pulled to VDD OR VSS;
MCLR = VDD; WDT enabled/disabled as specified.

3: When operation below -10°C is expected, use T1OSC High-Power mode, where LPT1OSC (CONFIG3H<2>) = 0. When operation will always be above -10°C, then the low-power Timer1 oscillator may be selected.

4: BOR and HLVD enable internal band gap reference. With both modules enabled, current consumption will be less than the sum of both specifications.

28.2 DC Characteristics: Power-Down and Supply Current PIC18F6X27/6X22/8X27/8X22 (Industrial, Extended) PIC18LF6X27/6X22/8X27/8X22 (Industrial) (Continued)

PIC18LF6X27/6X22/8X27/8X22 (Industrial)	Standard Operating Conditions (unless otherwise stated) Operating temperature -40°C ≤ TA ≤ +85°C for industrial
PIC18F6X27/6X22/8X27/8X22 (Industrial, Extended)	Standard Operating Conditions (unless otherwise stated) Operating temperature -40°C ≤ TA ≤ +85°C for industrial -40°C ≤ TA ≤ +125°C for extended

Param No.	Device	Typ	Max	Units	Conditions		
	Supply Current (IDD)(2)						
	PIC18LF6X27/6X22/8X27/8X22	78	100	μA	-40°C	VDD = 2.0V	FOSC = 1 MHz (**PRI_IDLE** mode, EC oscillator)
		78	100	μA	+25°C		
		84	110	μA	+85°C		
	PIC18LF6X27/6X22/8X27/8X22	130	150	μA	-40°C	VDD = 3.0V	
		130	150	μA	+25°C		
		140	160	μA	+85°C		
	All devices	230	280	μA	-40°C	VDD = 5.0V	
		235	290	μA	+25°C		
		240	300	μA	+85°C		
	Extended devices only	260	500	μA	+125°C		
	PIC18LF6X27/6X22/8X27/8X22	312	375	μA	-40°C	VDD = 2.0V	FOSC = 4 MHz (**PRI_IDLE** mode, EC oscillator)
		305	385	μA	+25°C		
		324	380	μA	+85°C		
	PIC18LF6X27/6X22/8X27/8X22	500	660	μA	-40°C	VDD = 3.0V	
		600	670	μA	+25°C		
		600	680	μA	+85°C		
	All devices	1.1	1.2	mA	-40°C	VDD = 5.0V	
		1.1	1.2	mA	+25°C		
		1.1	1.2	mA	+85°C		
	Extended devices only	1.2	1.3	mA	+125°C		

Legend: Shading of rows is to assist in readability of the table.

Note 1: The power-down current in Sleep mode does not depend on the oscillator type. Power-down current is measured with the part in Sleep mode, with all I/O pins in high-impedance state and tied to VDD or VSS and all features that add delta current disabled (such as WDT, Timer1 Oscillator, BOR, etc.).

2: The supply current is mainly a function of operating voltage, frequency and mode. Other factors, such as I/O pin loading and switching rate, oscillator type and circuit, internal code execution pattern and temperature, also have an impact on the current consumption.
The test conditions for all IDD measurements in active operation mode are:
OSC1 = external square wave, from rail-to-rail; all I/O pins tri-stated, pulled to VDD OR VSS;
MCLR = VDD; WDT enabled/disabled as specified.

3: When operation below -10°C is expected, use T1OSC High-Power mode, where LPT1OSC (CONFIG3H<2>) = 0. When operation will always be above -10°C, then the low-power Timer1 oscillator may be selected.

4: BOR and HLVD enable internal band gap reference. With both modules enabled, current consumption will be less than the sum of both specifications.

© 2008 Microchip Technology Inc.

28.2 DC Characteristics: Power-Down and Supply Current PIC18F6X27/6X22/8X27/8X22 (Industrial, Extended) PIC18LF6X27/6X22/8X27/8X22 (Industrial) (Continued)

PIC18LF6X27/6X22/8X27/8X22 (Industrial)		**Standard Operating Conditions (unless otherwise stated)** Operating temperature -40°C ≤ TA ≤ +85°C for industrial					
PIC18F6X27/6X22/8X27/8X22 (Industrial, Extended)		**Standard Operating Conditions (unless otherwise stated)** Operating temperature -40°C ≤ TA ≤ +85°C for industrial -40°C ≤ TA ≤ +125°C for extended					
Param No.	**Device**	**Typ**	**Max**	**Units**	**Conditions**		
	Supply Current (IDD)(2)						
	Extended devices only	3.4	5.8	mA	+125°C	VDD = 4.2V	FOSC = 25 MHz (**PRI_IDLE** mode, EC oscillator)
		5.2	7	mA	+125°C	VDD = 5.0V	
	All devices	7.2	10	mA	-40°C	VDD = 4.2 V	FOSC = 40 MHz (**PRI_IDLE** mode, EC oscillator)
		7.4	10	mA	+25°C		
		7.8	10	mA	+85°C		
	All devices	9.7	12	mA	-40°C	VDD = 5.0V	
		11	12	mA	+25°C		
		10	12	mA	+85°C		

Legend: Shading of rows is to assist in readability of the table.

Note 1: The power-down current in Sleep mode does not depend on the oscillator type. Power-down current is measured with the part in Sleep mode, with all I/O pins in high-impedance state and tied to VDD or VSS and all features that add delta current disabled (such as WDT, Timer1 Oscillator, BOR, etc.).

2: The supply current is mainly a function of operating voltage, frequency and mode. Other factors, such as I/O pin loading and switching rate, oscillator type and circuit, internal code execution pattern and temperature, also have an impact on the current consumption.
The test conditions for all IDD measurements in active operation mode are:
OSC1 = external square wave, from rail-to-rail; all I/O pins tri-stated, pulled to VDD OR VSS;
MCLR = VDD; WDT enabled/disabled as specified.

3: When operation below -10°C is expected, use T1OSC High-Power mode, where LPT1OSC (CONFIG3H<2>) = `0`. When operation will always be above -10°C, then the low-power Timer1 oscillator may be selected.

4: BOR and HLVD enable internal band gap reference. With both modules enabled, current consumption will be less than the sum of both specifications.

28.2 DC Characteristics: Power-Down and Supply Current PIC18F6X27/6X22/8X27/8X22 (Industrial, Extended) PIC18LF6X27/6X22/8X27/8X22 (Industrial) (Continued)

PIC18LF6X27/6X22/8X27/8X22 (Industrial)		**Standard Operating Conditions (unless otherwise stated)** Operating temperature -40°C ≤ TA ≤ +85°C for industrial					
PIC18F6X27/6X22/8X27/8X22 (Industrial, Extended)		**Standard Operating Conditions (unless otherwise stated)** Operating temperature -40°C ≤ TA ≤ +85°C for industrial -40°C ≤ TA ≤ +125°C for extended					
Param No.	**Device**	**Typ**	**Max**	**Units**	**Conditions**		
	Supply Current (IDD)(2)						
	PIC18LF6X27/6X22/8X27/8X22	17	28	μA	-40°C	VDD = 2.0V	FOSC = 32 kHz(3) (**SEC_RUN** mode, Timer1 as clock)
		18	25	μA	+25°C		
		19	28	μA	+70°C		
	PIC18LF6X27/6X22/8X27/8X22	48	70	μA	-40°C	VDD = 3.0V	
		42	52	μA	+25°C		
		37	48	μA	+70°C		
	All devices	120	180	μA	-40°C	VDD = 5.0V	
		97	130	μA	+25°C		
		90	125	μA	+70°C		
	PIC18LF6X27/6X22/8X27/8X22	3.0	10	μA	-40°C	VDD = 2.0V	FOSC = 32 kHz(3) (**SEC_IDLE** mode, Timer1 as clock)
		4.4	6.8	μA	+25°C		
		5.4	10	μA	+70°C		
	PIC18LF6X27/6X22/8X27/8X22	6.0	15	μA	-40°C	VDD = 3.0V	
		6.5	10	μA	+25°C		
		7.6	15	μA	+70°C		
	All devices	10.0	25	μA	-40°C	VDD = 5.0V	
		10.5	15	μA	+25°C		
		11.0	25	μA	+70°C		

Legend: Shading of rows is to assist in readability of the table.

Note 1: The power-down current in Sleep mode does not depend on the oscillator type. Power-down current is measured with the part in Sleep mode, with all I/O pins in high-impedance state and tied to VDD or VSS and all features that add delta current disabled (such as WDT, Timer1 Oscillator, BOR, etc.).

2: The supply current is mainly a function of operating voltage, frequency and mode. Other factors, such as I/O pin loading and switching rate, oscillator type and circuit, internal code execution pattern and temperature, also have an impact on the current consumption.
The test conditions for all IDD measurements in active operation mode are:
OSC1 = external square wave, from rail-to-rail; all I/O pins tri-stated, pulled to VDD OR VSS;
$\overline{\text{MCLR}}$ = VDD; WDT enabled/disabled as specified.

3: When operation below -10°C is expected, use T1OSC High-Power mode, where LPT1OSC (CONFIG3H<2>) = 0. When operation will always be above -10°C, then the low-power Timer1 oscillator may be selected.

4: BOR and HLVD enable internal band gap reference. With both modules enabled, current consumption will be less than the sum of both specifications.

© 2008 Microchip Technology Inc.

28.2 DC Characteristics: Power-Down and Supply Current PIC18F6X27/6X22/8X27/8X22 (Industrial, Extended) PIC18LF6X27/6X22/8X27/8X22 (Industrial) (Continued)

PIC18LF6X27/6X22/8X27/8X22 (Industrial)		**Standard Operating Conditions (unless otherwise stated)** Operating temperature -40°C ≤ TA ≤ +85°C for industrial					
PIC18F6X27/6X22/8X27/8X22 (Industrial, Extended)		**Standard Operating Conditions (unless otherwise stated)** Operating temperature -40°C ≤ TA ≤ +85°C for industrial -40°C ≤ TA ≤ +125°C for extended					
Param No.	**Device**	**Typ**	**Max**	**Units**	**Conditions**		
	Module Differential Currents (ΔIWDT, ΔIBOR, ΔILVD, ΔIOSCB, ΔIAD)						
D022 (ΔIWDT)	**Watchdog Timer**	1.5	2.2	μA	-40°C	VDD = 2.0V	
		1.6	2.2	μA	+25°C		
		1.7	2.3	μA	+85°C		
		2.3	3.5	μA	-40°C	VDD = 3.0V	
		2.4	3.5	μA	+25°C		
		3.4	3.5	μA	+85°C		
		4.8	7.5	μA	-40°C	VDD = 5.0V	
		6.0	7.5	μA	+25°C		
		6.1	7.8	μA	+85°C		
		8	10	μA	+125°C		
D022A (ΔIBOR)	**Brown-out Reset(4)**	4.2	50	μA	-40°C to +85°C	VDD = 3.0V	
		48	55	μA	-40°C to +85°C	VDD = 5.0V	
		66	55	μA	-40°C to +125°C		
		0	2.4	μA	-40°C to +85°C		Sleep mode, BOREN<1:0> = 10
		0	6.0	μA	-40°C to +125°C		
D022B (ΔILVD)	**High/Low-Voltage Detect(4)**	2.7	38	μA	-40°C to +85°C	VDD = 2.0V	
		30	40	μA	-40°C to +85°C	VDD = 3.0V	
		35	45	μA	-40°C to +85°C	VDD = 5.0V	
		36	45	μA	-40°C to +125°C		
D025 (ΔIOSCB)	**Timer1 Oscillator**	4.5	9	μA	-40°C(3)	VDD = 2.0V	32 kHz on Timer1
		.9	1.7	μA	-10°C		
		.9	2.2	μA	+25°C		
		.9	2.2	μA	+85°C		
		4.8	10	μA	-40°C(3)	VDD = 3.0V	32 kHz on Timer1
		1	1.8	μA	-10°C		
		1	2.3	μA	+25°C		
		1	2.3	μA	+85°C		
		6	11	μA	-40°C(3)	VDD = 5.0V	32 kHz on Timer1
		1.6	6	μA	-10°C		
		1.6	6	μA	+25°C		
		1.6	6	μA	+85°C		

Legend: Shading of rows is to assist in readability of the table.

Note 1: The power-down current in Sleep mode does not depend on the oscillator type. Power-down current is measured with the part in Sleep mode, with all I/O pins in high-impedance state and tied to VDD or VSS and all features that add delta current disabled (such as WDT, Timer1 Oscillator, BOR, etc.).

2: The supply current is mainly a function of operating voltage, frequency and mode. Other factors, such as I/O pin loading and switching rate, oscillator type and circuit, internal code execution pattern and temperature, also have an impact on the current consumption.
The test conditions for all IDD measurements in active operation mode are:
OSC1 = external square wave, from rail-to-rail; all I/O pins tri-stated, pulled to VDD OR VSS;
$\overline{\text{MCLR}}$ = VDD; WDT enabled/disabled as specified.

3: When operation below -10°C is expected, use T1OSC High-Power mode, where LPT1OSC (CONFIG3H<2>) = 0. When operation will always be above -10°C, then the low-power Timer1 oscillator may be selected.

4: BOR and HLVD enable internal band gap reference. With both modules enabled, current consumption will be less than the sum of both specifications.

28.2 DC Characteristics: Power-Down and Supply Current PIC18F6X27/6X22/8X27/8X22 (Industrial, Extended) PIC18LF6X27/6X22/8X27/8X22 (Industrial) (Continued)

PIC18LF6X27/6X22/8X27/8X22 (Industrial)		**Standard Operating Conditions (unless otherwise stated)** Operating temperature -40°C ≤ TA ≤ +85°C for industrial					
PIC18F6X27/6X22/8X27/8X22 (Industrial, Extended)		**Standard Operating Conditions (unless otherwise stated)** Operating temperature -40°C ≤ TA ≤ +85°C for industrial -40°C ≤ TA ≤ +125°C for extended					
Param No.	**Device**	**Typ**	**Max**	**Units**	**Conditions**		
D026 (ΔIAD)	**A/D Converter**	0.2	1	μA	-40°C to +85°C	VDD = 2.0V	A/D on, not converting, Sleep mode
		0.2	1	μA	-40°C to +85°C	VDD = 3.0V	
		0.2	1	μA	-40°C to +85°C	VDD = 5.0V	
		0.5	4	μA	-40°C to +125°C		

Legend: Shading of rows is to assist in readability of the table.

Note 1: The power-down current in Sleep mode does not depend on the oscillator type. Power-down current is measured with the part in Sleep mode, with all I/O pins in high-impedance state and tied to VDD or VSS and all features that add delta current disabled (such as WDT, Timer1 Oscillator, BOR, etc.).

2: The supply current is mainly a function of operating voltage, frequency and mode. Other factors, such as I/O pin loading and switching rate, oscillator type and circuit, internal code execution pattern and temperature, also have an impact on the current consumption.
The test conditions for all IDD measurements in active operation mode are:
OSC1 = external square wave, from rail-to-rail; all I/O pins tri-stated, pulled to VDD OR VSS;
$\overline{\text{MCLR}}$ = VDD; WDT enabled/disabled as specified.

3: When operation below -10°C is expected, use T1OSC High-Power mode, where LPT1OSC (CONFIG3H<2>) = `0`. When operation will always be above -10°C, then the low-power Timer1 oscillator may be selected.

4: BOR and HLVD enable internal band gap reference. With both modules enabled, current consumption will be less than the sum of both specifications.

© 2008 Microchip Technology Inc.

28.3 DC Characteristics: PIC18F8722 (Industrial, Extended) PIC18LF6X27/6X22/8X27/8X22 (Industrial)

DC CHARACTERISTICS			Standard Operating Conditions (unless otherwise stated) Operating temperature -40°C ≤ TA ≤ +85°C for industrial			
Param No.	**Symbol**	**Characteristic**	**Min**	**Max**	**Units**	**Conditions**
	VIL	**Input Low Voltage**				
		I/O Ports:				
D030		with TTL Buffer	VSS	0.15 VDD	V	VDD < 4.5V
D030A			—	0.8	V	4.5V ≤ VDD ≤ 5.5V
D031		with Schmitt Trigger Buffer	VSS	0.2 VDD	V	
D032		$\overline{\text{MCLR}}$	VSS	0.2 VDD	V	
D033		OSC1	VSS	0.3 VDD	V	HS, HSPLL modes
D033A		OSC1	VSS	0.2 VDD	V	RC, EC modes(1)
D033B		OSC1	VSS	0.3	V	XT, LP modes
D034		T13CKI	VSS	0.3	V	
	VIH	**Input High Voltage**				
		I/O Ports:				
D040		with TTL Buffer	0.25 VDD + 0.8V	VDD	V	VDD < 4.5V
D040A			2.0	VDD	V	4.5V ≤ VDD ≤ 5.5V
D041		with Schmitt Trigger Buffer	0.8 VDD	VDD	V	
D042		$\overline{\text{MCLR}}$	0.8 VDD	VDD	V	
D043		OSC1	0.7 VDD	VDD	V	HS, HSPLL modes
D043A		OSC1	0.8 VDD	VDD	V	EC mode
D043B		OSC1	0.9 VDD	VDD	V	RC mode(1)
D043C		OSC1	1.6	VDD	V	XT, LP modes
D044		T13CKI	1.6	VDD	V	
	IIL	**Input Leakage Current(2,3)**				
D060		I/O Ports	—	±200	nA	VDD < 5.5V VSS ≤ VPIN ≤ VDD, Pin at high-impedance
			—	±50	nA	VDD < 3V VSS ≤ VPIN ≤ VDD, Pin at high-impedance
D061		$\overline{\text{MCLR}}$	—	±1	μA	VSS ≤ VPIN ≤ VDD
D063		OSC1	—	±1	μA	VSS ≤ VPIN ≤ VDD
	IPU	**Weak Pull-up Current**				
D070	IPURB	PORTB Weak Pull-up Current	50	400	μA	VDD = 5V, VPIN = VSS

Note 1: In RC oscillator configuration, the OSC1/CLKI pin is a Schmitt Trigger input. It is not recommended that the PIC® device be driven with an external clock while in RC mode.

2: The leakage current on the $\overline{\text{MCLR}}$ pin is strongly dependent on the applied voltage level. The specified levels represent normal operating conditions. Higher leakage current may be measured at different input voltages.

3: Negative current is defined as current sourced by the pin.

28.3 DC Characteristics: PIC18F8722 (Industrial, Extended) PIC18LF6X27/6X22/8X27/8X22 (Industrial) (Continued)

DC CHARACTERISTICS			Standard Operating Conditions (unless otherwise stated) Operating temperature -40°C ≤ TA ≤ +85°C for industrial			
Param No.	**Symbol**	**Characteristic**	**Min**	**Max**	**Units**	**Conditions**
	VOL	**Output Low Voltage**				
D080		I/O Ports	—	0.6	V	IOL = 8.5 mA, VDD = 4.5V, -40°C to +85°C
D083		OSC2/CLKO (RC, RCIO, EC, ECIO modes)	—	0.6	V	IOL = 1.6 mA, VDD = 4.5V, -40°C to +85°C
	VOH	**Output High Voltage(3)**				
D090		I/O Ports	VDD – 0.7	—	V	IOH = -3.0 mA, VDD = 4.5V, -40°C to +85°C
D092		OSC2/CLKO (RC, RCIO, EC, ECIO modes)	VDD – 0.7	—	V	IOH = -1.3 mA, VDD = 4.5V, -40°C to +85°C
		Capacitive Loading Specs on Output Pins				
D100	COSC2	OSC2 Pin	—	15	pF	In XT, HS and LP modes when external clock is used to drive OSC1
D101	CIO	All I/O Pins and OSC2 (in RC mode)	—	50	pF	To meet the AC Timing Specifications
D102	CB	SCLx, SDAx	—	400	pF	I^2C™ Specification

Note 1: In RC oscillator configuration, the OSC1/CLKI pin is a Schmitt Trigger input. It is not recommended that the PIC® device be driven with an external clock while in RC mode.

2: The leakage current on the $\overline{MCLR}$ pin is strongly dependent on the applied voltage level. The specified levels represent normal operating conditions. Higher leakage current may be measured at different input voltages.

3: Negative current is defined as current sourced by the pin.

© 2008 Microchip Technology Inc.

TABLE 28-1: MEMORY PROGRAMMING REQUIREMENTS

DC CHARACTERISTICS			Standard Operating Conditions (unless otherwise stated) Operating temperature -40°C ≤ TA ≤ +85°C for industrial				
Param No.	**Sym**	**Characteristic**	**Min**	**Typ†**	**Max**	**Units**	**Conditions**
		Data EEPROM Memory					
D120	ED	Byte Endurance	100K	1M	—	E/W	-40°C to +85°C
D121	VDRW	VDD for Read/Write	VMIN	—	5.5	V	Using EECON to read/write VMIN = Minimum operating voltage
D122	TDEW	Erase/Write Cycle Time	—	4	—	ms	
D123	TRETD	Characteristic Retention	40	—	—	Year	Provided no other specifications are violated
D124	TREF	Number of Total Erase/Write Cycles before Refresh(1)	1M	10M	—	E/W	-40°C to +85°C
D125	IDDP	Supply Current during Programming	—	10	—	mA	
		Program Flash Memory					
D130	EP	Cell Endurance	10K	100K	—	E/W	-40°C to +85°C
D131	VPR	VDD for Read	VMIN	—	5.5	V	VMIN = Minimum operating voltage
D132B	VPEW	VDD for Self-Timed Write and Row Erase	VMIN	—	5.5	V	VMIN = Minimum operating voltage
D133A	TIW	Self-Timed Write Cycle Time	—	2	—	ms	
D134	TRETD	Characteristic Retention	40	100	—	Year	Provided no other specifications are violated
D135	IDDP	Supply Current during Programming	—	10	—	mA	

† Data in “Typ” column is at 5.0V, 25°C unless otherwise stated. These parameters are for design guidance only and are not tested.

Note 1: Refer to **Section 8.8 “Using the Data EEPROM”** for a more detailed discussion on data EEPROM endurance.

TABLE 28-2: COMPARATOR SPECIFICATIONS

Operating Conditions: 3.0V < VDD < 5.5V, -40°C < TA < +85°C (unless otherwise stated)							
Param No.	**Sym**	**Characteristics**	**Min**	**Typ**	**Max**	**Units**	**Comments**
D300	VIOFF	Input Offset Voltage	—	±5.0	±10	mV	
D301	VICM	Input Common Mode Voltage	0	—	VDD – 1.5	V	
D302	CMRR	Common Mode Rejection Ratio	55	—	—	dB	
300	TRESP	Response Time(1)	—	150	400	ns	PIC18**F**XXXX
300A			—	150	600	ns	PIC18**LF**XXXX, VDD = 2.0V
301	TMC2OV	Comparator Mode Change to Output Valid	—	—	10	μs	

Note 1: Response time measured with one comparator input at (VDD – 1.5)/2, while the other input transitions from VSS to VDD.

TABLE 28-3: COMPARATOR VOLTAGE REFERENCE SPECIFICATIONS

Operating Conditions: 3.0V < VDD < 5.5V, -40°C < TA < +85°C (unless otherwise stated)							
Param No.	**Sym**	**Characteristics**	**Min**	**Typ**	**Max**	**Units**	**Comments**
D310	VRES	Resolution	VDD/24	—	VDD/32	LSb	
D311	VRAA	Absolute Accuracy	—	—	1/2	LSb	
D312	VRUR	Unit Resistor Value (R)	—	2k	—	Ω	
310	TSET	Settling Time(1)	—	—	10	μs	

Note 1: Settling time measured while CVRR = `1` and CVR<3:0> transitions from ‘`0000`’ to ‘`1111`’.

© 2008 Microchip Technology Inc.

FIGURE 28-4: HIGH/LOW-VOLTAGE DETECT CHARACTERISTICS

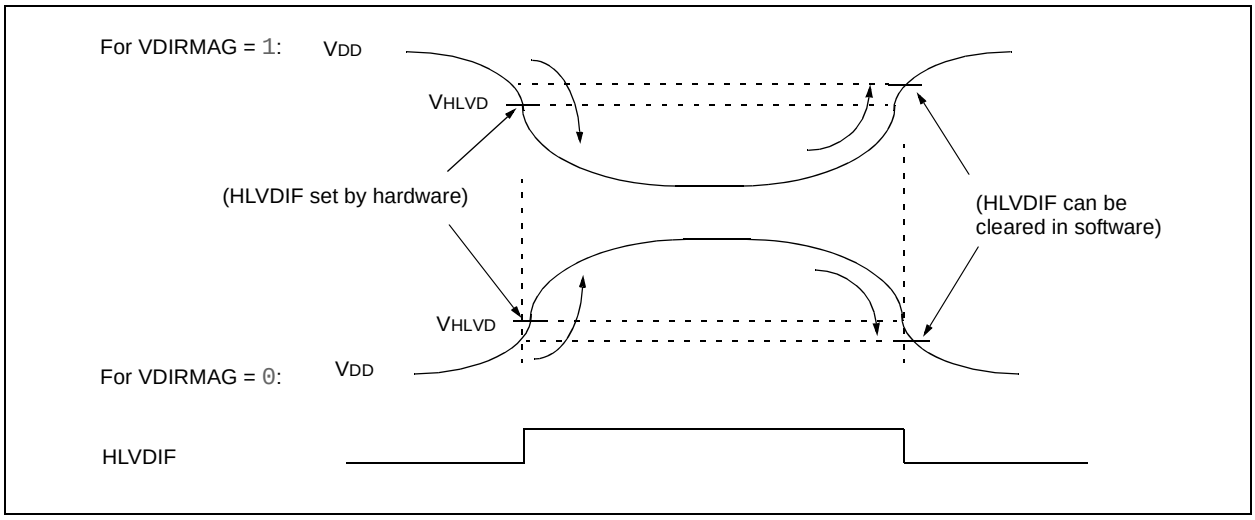

TABLE 28-4: HIGH/LOW-VOLTAGE DETECT CHARACTERISTICS

Standard Operating Conditions (unless otherwise stated)
Operating temperature -40°C ≤ TA ≤ +85°C for industrial

Param No.	Sym	Characteristic		Min	Typ	Max	Units	Conditions
D420		HLVD Voltage on VDD Transition High-to-Low	HLVDL<3:0> = 0000	2.06	2.17	2.28	V	
			HLVDL<3:0> = 0001	2.12	2.23	2.34	V	
			HLVDL<3:0> = 0010	2.24	2.36	2.48	V	
			HLVDL<3:0> = 0011	2.32	2.44	2.56	V	
			HLVDL<3:0> = 0100	2.47	2.60	2.73	V	
			HLVDL<3:0> = 0101	2.65	2.79	2.93	V	
			HLVDL<3:0> = 0110	2.74	2.89	3.04	V	
			HLVDL<3:0> = 0111	2.96	3.12	3.28	V	
			HLVDL<3:0> = 1000	3.22	3.39	3.56	V	
			HLVDL<3:0> = 1001	3.37	3.55	3.73	V	
			HLVDL<3:0> = 1010	3.52	3.71	3.90	V	
			HLVDL<3:0> = 1011	3.70	3.90	4.10	V	
			HLVDL<3:0> = 1100	3.90	4.11	4.32	V	
			HLVDL<3:0> = 1101	4.11	4.33	4.55	V	
			HLVDL<3:0> = 1110	4.36	4.59	4.82	V	

28.4 AC (Timing) Characteristics

28.4.1 TIMING PARAMETER SYMBOLOGY

The timing parameter symbols have been created following one of the following formats:

1. TppS2ppS
2. TppS
3. TCC:ST (I²C™ specifications only)
4. Ts (I²C specifications only)

T			
F	Frequency	T	Time

Lowercase letters (pp) and their meanings:

pp			
cc	CCP1	osc	OSC1
ck	CLKO	rd	$\overline{RD}$
cs	$\overline{CS}$	rw	$\overline{RD}$ or $\overline{WR}$
di	SDI	sc	SCK
do	SDO	ss	$\overline{SS}$
dt	Data in	t0	T0CKI
io	I/O port	t1	T13CKI
mc	$\overline{MCLR}$	wr	$\overline{WR}$

Uppercase letters and their meanings:

S			
F	Fall	P	Period
H	High	R	Rise
I	Invalid (High-Impedance)	V	Valid
L	Low	Z	High-Impedance
I²C only			
AA	output access	High	High
BUF	Bus free	Low	Low

TCC:ST (I²C specifications only)

CC			
HD	Hold	SU	Setup
ST			
DAT	DATA input hold	STO	Stop condition
STA	Start condition		

© 2008 Microchip Technology Inc.

28.4.2 TIMING CONDITIONS

The temperature and voltages specified in Table 28-5 apply to all timing specifications unless otherwise noted. Figure 28-5 specifies the load conditions for the timing specifications.

Note:	Because of space limitations, the generic terms “PIC18FXXXX” and “PIC18LFXXXX” are used throughout this section to refer to the PIC18F6X27/6X22/8X27/8X22 and PIC18LF6X27/6X22/8X27/8X22 families of devices specifically and only those devices.

TABLE 28-5: TEMPERATURE AND VOLTAGE SPECIFICATIONS – AC

AC CHARACTERISTICS	**Standard Operating Conditions (unless otherwise stated)** Operating temperature -40°C ≤ TA ≤ +85°C for industrial -40°C ≤ TA ≤ +125°C for extended Operating voltage VDD range as described in the DC specifications in **Section 28.1** and **Section 28.3**. LF parts operate for industrial temperatures only.

FIGURE 28-5: LOAD CONDITIONS FOR DEVICE TIMING SPECIFICATIONS

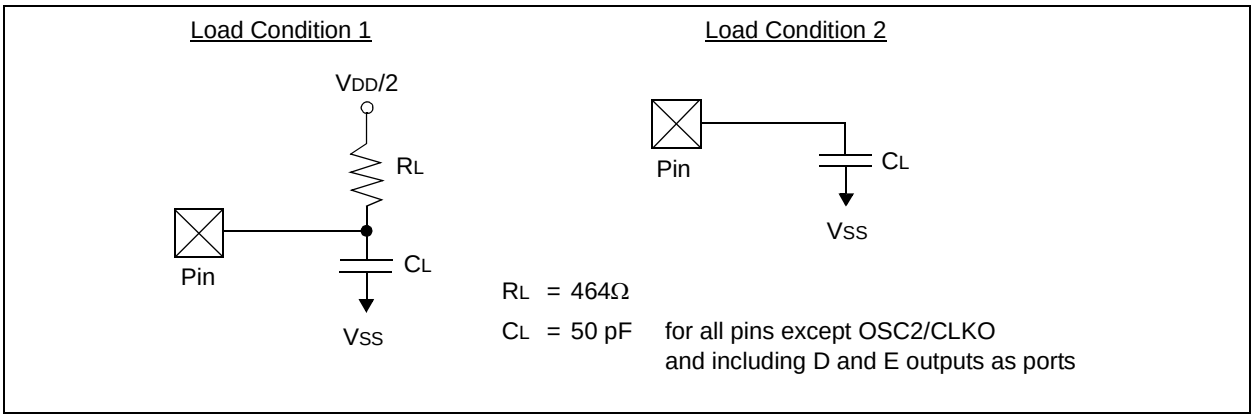

28.4.3 TIMING DIAGRAMS AND SPECIFICATIONS

FIGURE 28-6: EXTERNAL CLOCK TIMING (ALL MODES EXCEPT PLL)

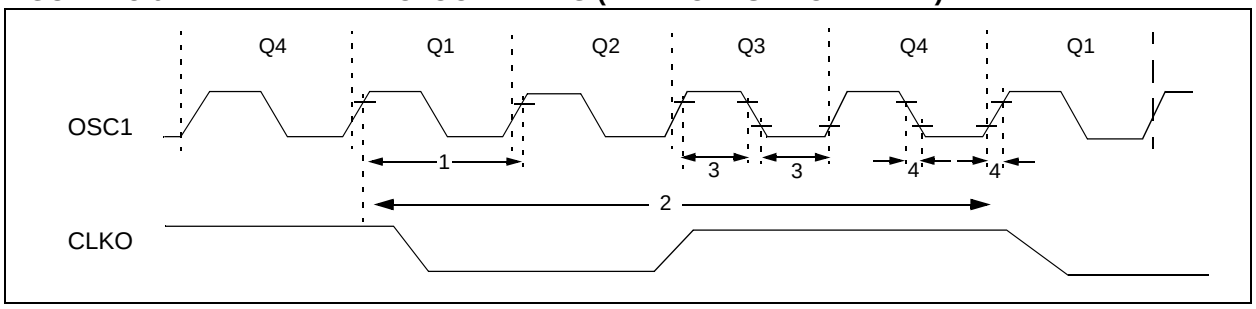

TABLE 28-6: EXTERNAL CLOCK TIMING REQUIREMENTS

Param. No.	Symbol	Characteristic	Min	Max	Units	Conditions
1A	FOSC	External CLKI Frequency(1)	DC	1	MHz	XT, RC Oscillator mode
			DC	25	MHz	HS Oscillator mode
			DC	31.25	kHz	LP Oscillator mode
			DC	40	MHz	EC Oscillator mode
		Oscillator Frequency(1)	DC	4	MHz	RC Oscillator mode
			0.1	4	MHz	XT Oscillator mode
			4	25	MHz	HS Oscillator mode
			4	10	MHz	HS + PLL Oscillator mode
			5	200	kHz	LP Oscillator mode
1	TOSC	External CLKI Period(1)	1000	—	ns	XT, RC Oscillator mode
			40	—	ns	HS Oscillator mode
			32	—	μs	LP Oscillator mode
			25	—	ns	EC Oscillator mode
		Oscillator Period(1)	250	—	ns	RC Oscillator mode
			250	1	μs	XT Oscillator mode
			40	250	ns	HS Oscillator mode
			100	250	ns	HS + PLL Oscillator mode
			5	200	μs	LP Oscillator mode
2	TCY	Instruction Cycle Time(1)	100	—	ns	TCY = 4/FOSC, Industrial
			160	—	ns	TCY = 4/FOSC, Extended
3	TOSL, TOSH	External Clock in (OSC1) High or Low Time	30	—	ns	XT Oscillator mode
			2.5	—	μs	LP Oscillator mode
			10	—	ns	HS Oscillator mode
4	TOSR, TOSF	External Clock in (OSC1) Rise or Fall Time	—	20	ns	XT Oscillator mode
			—	50	ns	LP Oscillator mode
			—	7.5	ns	HS Oscillator mode

Note 1: Instruction cycle period (TCY) equals four times the input oscillator time base period for all configurations except PLL. All specified values are based on characterization data for that particular oscillator type under standard operating conditions with the device executing code. Exceeding these specified limits may result in an unstable oscillator operation and/or higher than expected current consumption. All devices are tested to operate at “min.” values with an external clock applied to the OSC1/CLKI pin. When an external clock input is used, the “max.” cycle time limit is “DC” (no clock) for all devices.

© 2008 Microchip Technology Inc.

TABLE 28-7: PLL CLOCK TIMING SPECIFICATIONS (V_{DD} = 4.2V TO 5.5V)

Param No.	Sym	Characteristic	Min	Typ†	Max	Units	Conditions
F10	F_{OSC}	Oscillator Frequency Range	4	—	10	MHz	HS mode only
F11	F_{SYS}	On-Chip VCO System Frequency	16	—	40	MHz	HS mode only
F12	t_{rc}	PLL Start-up Time (Lock Time)	—	—	2	ms	
F13	Δ_{CLK}	CLKO Stability (Jitter)	-2	—	+2	%	

† Data in “Typ” column is at 5V, 25°C, unless otherwise stated. These parameters are for design guidance only and are not tested.

TABLE 28-8: AC CHARACTERISTICS: INTERNAL RC ACCURACY
PIC18F6X27/6X22/8X27/8X22 (INDUSTRIAL, EXTENDED)
PIC18LF6X27/6X22/8X27/8X22 (INDUSTRIAL)

PIC18LF6X27/6X22/8X27/8X22 (Industrial)		**Standard Operating Conditions (unless otherwise stated)** Operating temperature -40°C ≤ TA ≤ +85°C for industrial					
PIC18F6X27/6X22/8X27/8X22 (Industrial, Extended)		**Standard Operating Conditions (unless otherwise stated)** Operating temperature -40°C ≤ TA ≤ +85°C for industrial -40°C ≤ TA ≤ +125°C for extended					
Param No.	**Device**	**Min**	**Typ**	**Max**	**Units**	**Conditions**	
	INTOSC Accuracy @ Freq = 8 MHz, 4 MHz, 2 MHz, 1 MHz, 500 kHz, 250 kHz, 125 kHz(1)						
	PIC18LF6X27/6X22/8X27/8X22	-2	+/-1	2	%	+25°C	VDD = 2.7-3.3V
		-5	+/-1	5	%	-40°C to +85°C	VDD = 2.7-3.3V
	PIC18F6X27/6X22/8X27/8X22	-2	+/-1	2	%	+25°C	VDD = 4.5-5.5V
		-5	+/-1	5	%	-40°C to +85°C	VDD = 4.5-5.5V
	INTRC Accuracy @ Freq = 31 kHz						
	PIC18LF6X27/6X22/8X27/8X22	26.562	—	35.938	kHz	-40°C to +85°C	VDD = 2.7-3.3V
	PIC18F6X27/6X22/8X27/8X22	26.562	+/-8	35.938	kHz	-40°C to +85°C	VDD = 4.5-5.5V

Legend: Shading of rows is to assist in readability of the table.

Note 1: Frequency calibrated at 25°C. OSCTUNE register can be used to compensate for temperature drift.

FIGURE 28-7: CLKO AND I/O TIMING

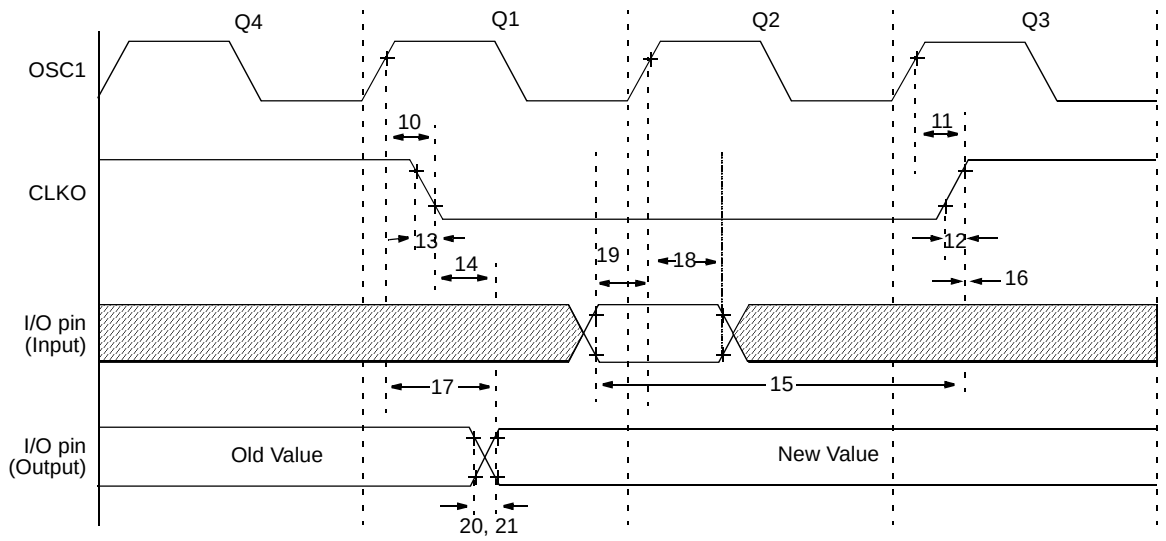

Note: Refer to Figure 28-5 for load conditions.

TABLE 28-9: CLKO AND I/O TIMING REQUIREMENTS

Param No.	Symbol	Characteristic		Min	Typ	Max	Units	Conditions
10	TOSH2CKL	OSC1 ↑ to CLKO ↓		—	75	200	ns	**(Note 1)**
11	TOSH2CKH	OSC1 ↑ to CLKO ↑		—	75	200	ns	**(Note 1)**
12	TCKR	CLKO Rise Time		—	35	100	ns	**(Note 1)**
13	TCKF	CLKO Fall Time		—	35	100	ns	**(Note 1)**
14	TCKL2IOV	CLKO ↓ to Port Out Valid		—	—	0.5 TCY + 20	ns	**(Note 1)**
15	TIOV2CKH	Port In Valid before CLKO ↑		0.25 TCY + 25	—	—	ns	**(Note 1)**
16	TCKH2IOI	Port In Hold after CLKO ↑		0	—	—	ns	**(Note 1)**
17	TOSH2IOV	OSC1 ↑ (Q1 cycle) to Port Out Valid		—	50	150	ns	
18	TOSH2IOI	OSC1 ↑ (Q2 cycle) to Port Input Invalid (I/O in hold time)	PIC18**F**XXXX	100	—	—	ns	
18A			PIC18**LF**XXXX	200	—	—	ns	VDD = 2.0V
19	TIOV2OSH	Port Input Valid to OSC1 ↑ (I/O in setup time)		0	—	—	ns	
20	TIOR	Port Output Rise Time	PIC18**F**XXXX	—	10	25	ns	
20A			PIC18**LF**XXXX	—	—	60	ns	VDD = 2.0V
21	TIOF	Port Output Fall Time	PIC18**F**XXXX	—	10	25	ns	
21A			PIC18**LF**XXXX	—	—	60	ns	VDD = 2.0V
22†	TINP	INTx pin High or Low Time		TCY	—	—	ns	
23†	TRBP	RB<7:4> Change INTx High or Low Time		TCY	—	—	ns	

† These parameters are asynchronous events not related to any internal clock edges.

Note 1: Measurements are taken in RC mode, where CLKO output is 4 x TOSC.

© 2008 Microchip Technology Inc.

FIGURE 28-8: PROGRAM MEMORY READ TIMING DIAGRAM

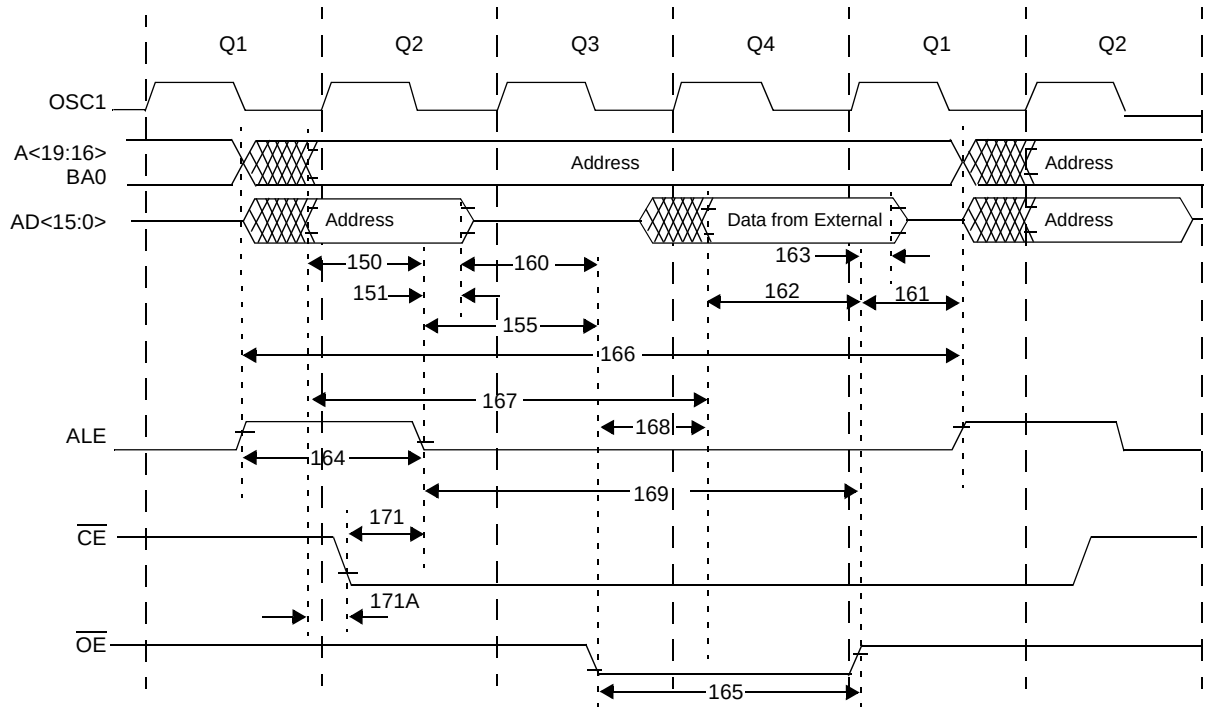

Operating Conditions: 2.0V < VCC < 5.5V, -40°C < TA < +125°C unless otherwise stated.

TABLE 28-10: CLKO AND I/O TIMING REQUIREMENTS

Param. No	Symbol	Characteristics	Min	Typ	Max	Units
150	TadV2alL	Address Out Valid to ALE ↓ (address setup time)	0.25 TCY – 10	—	—	ns
151	TalL2adl	ALE ↓ to Address Out Invalid (address hold time)	5	—	—	ns
155	TalL2oeL	ALE ↓ to $\overline{OE}$ ↓	10	0.125 TCY	—	ns
160	TadZ2oeL	AD high-Z to $\overline{OE}$ ↓ (bus release to $\overline{OE}$)	0	—	—	ns
161	ToeH2adD	$\overline{OE}$ ↑ to AD Driven	0.125 TCY – 5	—	—	ns
162	TadV2oeH	LS Data Valid before $\overline{OE}$ ↑ (data setup time)	20	—	—	ns
163	ToeH2adl	$\overline{OE}$ ↑ to Data In Invalid (data hold time)	0	—	—	ns
164	TalH2alL	ALE Pulse Width	—	TCY	—	ns
165	ToeL2oeH	$\overline{OE}$ Pulse Width	0.5 TCY – 5	0.5 TCY	—	ns
166	TalH2alH	ALE ↑ to ALE ↑ (cycle time)	—	0.25 TCY	—	ns
167	Tacc	Address Valid to Data Valid	0.75 TCY – 25	—	—	ns
168	Toe	$\overline{OE}$ ↓ to Data Valid		—	0.5 TCY – 25	ns
169	TalL2oeH	ALE ↓ to $\overline{OE}$ ↑	0.625 TCY – 10	—	0.625 TCY + 10	ns
171	TalH2csL	Chip Enable Active to ALE ↓	0.25 TCY – 20	—	—	ns
171A	TubL2oeH	AD Valid to Chip Enable Active	—	—	10	ns

FIGURE 28-9: PROGRAM MEMORY WRITE TIMING DIAGRAM

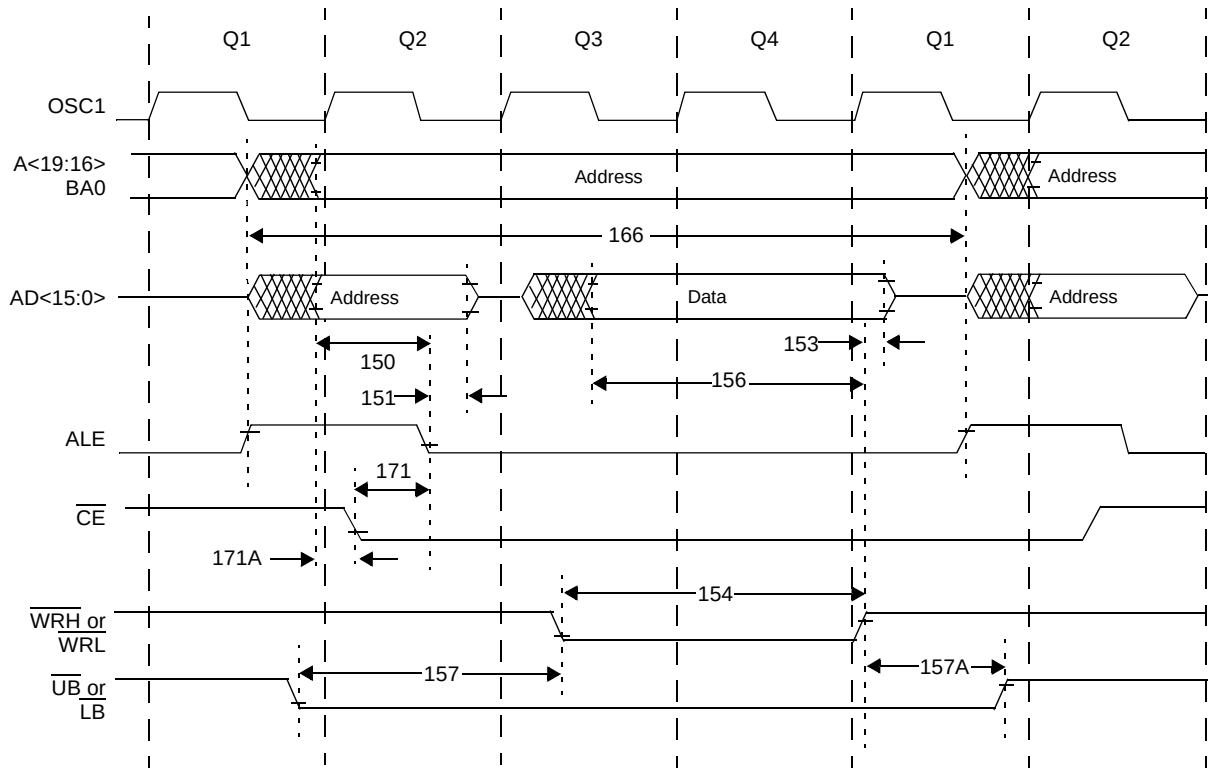

Operating Conditions: 2.0V < VCC < 5.5V, -40°C < TA < +125°C unless otherwise stated.

TABLE 28-11: PROGRAM MEMORY WRITE TIMING REQUIREMENTS

Param. No	Symbol	Characteristics	Min	Typ	Max	Units
150	TadV2alL	Address Out Valid to ALE ↓ (address setup time)	0.25 TCY – 10	—	—	ns
151	TalL2adl	ALE ↓ to Address Out Invalid (address hold time)	5	—	—	ns
153	TwrH2adl	$\overline{\text{WRn}}$ ↑ to Data Out Invalid (data hold time)	5	—	—	ns
154	TwrL	$\overline{\text{WRn}}$ Pulse Width	0.5 TCY – 5	0.5 TCY	—	ns
156	TadV2wrH	Data Valid before $\overline{\text{WRn}}$ ↑ (data setup time)	0.5 TCY – 10	—	—	ns
157	TbsV2wrL	Byte Select Valid before $\overline{\text{WRn}}$ ↓ (byte select setup time)	0.25 TCY	—	—	ns
157A	TwrH2bsI	$\overline{\text{WRn}}$ ↑ to Byte Select Invalid (byte select hold time)	0.125 TCY – 5	—	—	ns
166	TalH2alH	ALE ↑ to ALE ↑ (cycle time)	—	0.25 TCY	—	ns
171	TalH2csL	Chip Enable Active to ALE ↓	0.25 TCY – 20	—	—	ns
171A	TubL2oeH	AD Valid to Chip Enable Active	—	—	10	ns

© 2008 Microchip Technology Inc.

FIGURE 28-10: RESET, WATCHDOG TIMER, OSCILLATOR START-UP TIMER AND POWER-UP TIMER TIMING

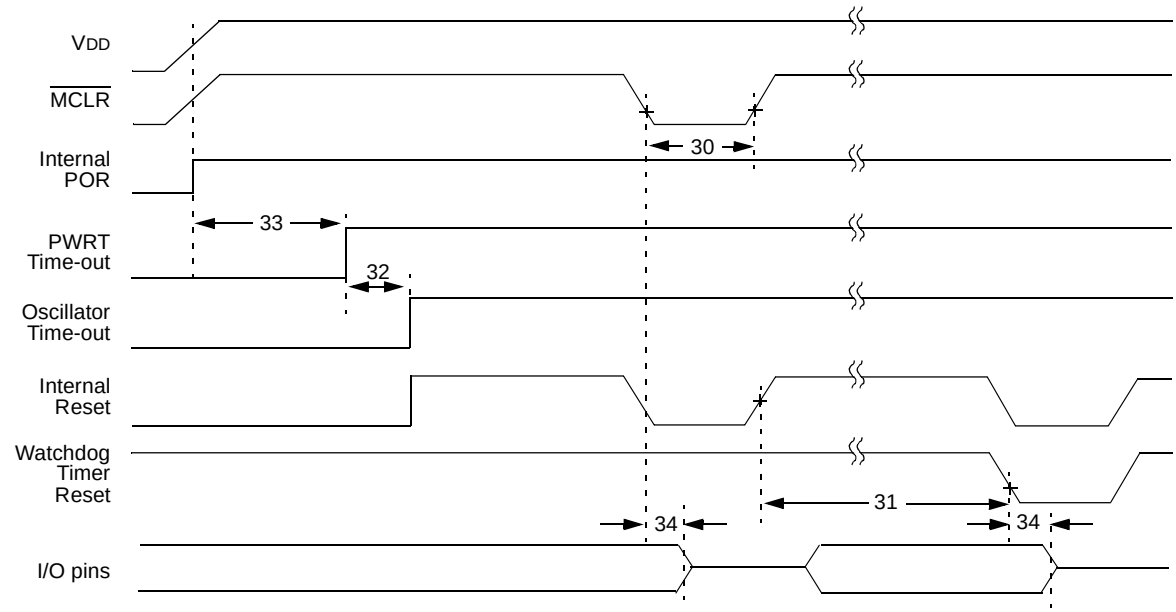

Note: Refer to Figure 28-5 for load conditions.

FIGURE 28-11: BROWN-OUT RESET TIMING

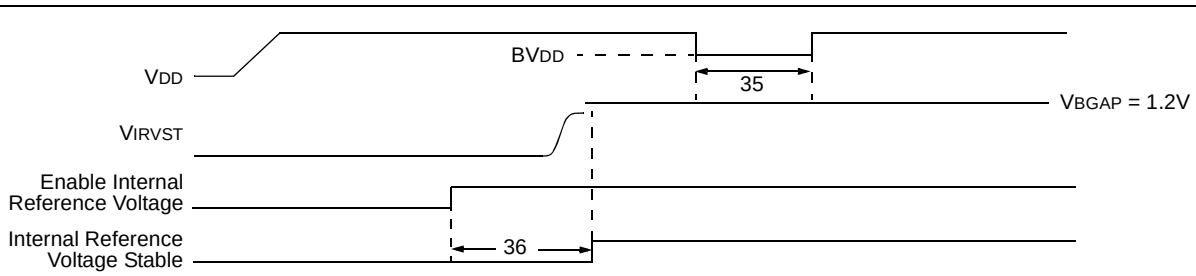

TABLE 28-12: RESET, WATCHDOG TIMER, OSCILLATOR START-UP TIMER, POWER-UP TIMER AND BROWN-OUT RESET REQUIREMENTS

Param. No.	Symbol	Characteristic	Min	Typ	Max	Units	Conditions
30	TmcL	$\overline{\text{MCLR}}$ Pulse Width (low)	2	—	—	μs	
31	TWDT	Watchdog Timer Time-out Period (no postscaler)	3.4	4.0	4.6	ms	
32	TOST	Oscillation Start-up Timer Period	1024 TOSC	—	1024 TOSC	—	TOSC = OSC1 period
33	TPWRT	Power-up Timer Period	55.6	64	75	ms	
34	TIOZ	I/O High-Impedance from $\overline{\text{MCLR}}$ Low or Watchdog Timer Reset	—	2	—	μs	
35	TBOR	Brown-out Reset Pulse Width	200	—	—	μs	VDD ≤ BVDD (see D005)
36	TIRVST	Time for Internal Reference Voltage to become Stable	—	20	50	μs	
37	TLVD	High/Low-Voltage Detect Pulse Width	200	—	—	μs	VDD ≤ VHLVD
38	TCSD	CPU Start-up Time	—	10	—	μs	
39	TIOBST	Time for INTOSC to Stabilize	—	1	—	μs	

FIGURE 28-12: TIMER0 AND TIMER1 EXTERNAL CLOCK TIMINGS

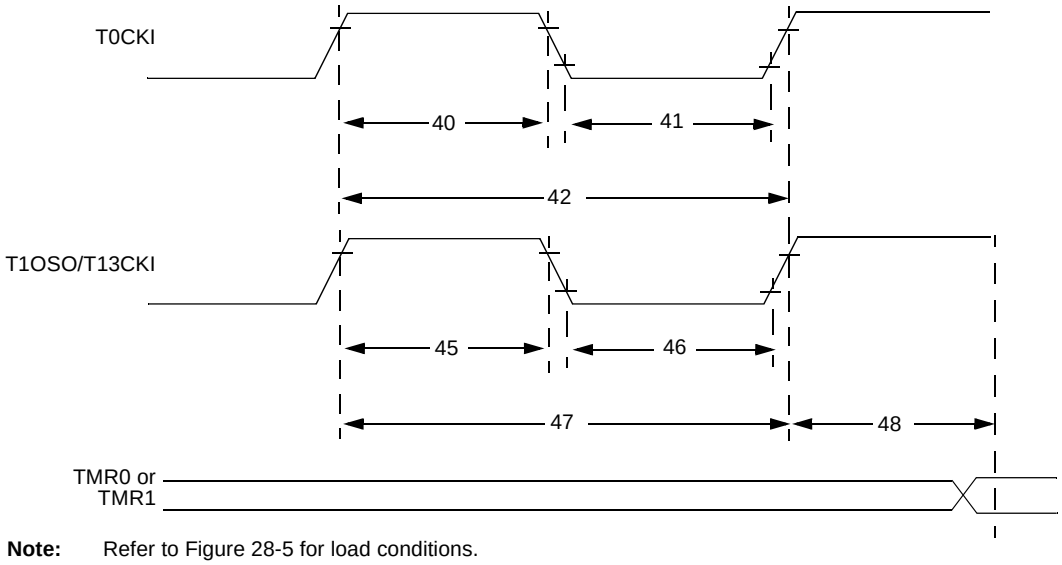

Note: Refer to Figure 28-5 for load conditions.

TABLE 28-13: TIMER0 AND TIMER1 EXTERNAL CLOCK REQUIREMENTS

Param No.	Symbol	Characteristic			Min	Max	Units	Conditions
40	TT0H	T0CKI High Pulse Width		No prescaler	0.5 TCY + 20	—	ns	
				With prescaler	10	—	ns	
41	TT0L	T0CKI Low Pulse Width		No prescaler	0.5 TCY + 20	—	ns	
				With prescaler	10	—	ns	
42	TT0P	T0CKI Period		No prescaler	TCY + 10	—	ns	
				With prescaler	Greater of: 20 ns or (TCY + 40)/N	—	ns	N = prescale value (1, 2, 4,..., 256)
45	TT1H	T13CKI High Time	Synchronous, no prescaler		0.5 TCY + 20	—	ns	
			Synchronous, with prescaler	PIC18**F**XXXX	10	—	ns	
				PIC18**LF**XXXX	25	—	ns	VDD = 2.0V
			Asynchronous	PIC18**F**XXXX	30	—	ns	
				PIC18**LF**XXXX	50	—	ns	VDD = 2.0V
46	TT1L	T13CKI Low Time	Synchronous, no prescaler		0.5 TCY + 5	—	ns	
			Synchronous, with prescaler	PIC18**F**XXXX	10	—	ns	
				PIC18**LF**XXXX	25	—	ns	VDD = 2.0V
			Asynchronous	PIC18**F**XXXX	30	—	ns	
				PIC18**LF**XXXX	50	—	ns	VDD = 2.0V
47	TT1P	T13CKI Input Period	Synchronous		Greater of: 20 ns or (TCY + 40)/N	—	ns	N = prescale value (1, 2, 4, 8)
			Asynchronous		60	—	ns	
	FT1	T13CKI Oscillator Input Frequency Range			DC	50	kHz	
48	TCKE2TMRI	Delay from External T13CKI Clock Edge to Timer Increment			2 TOSC	7 TOSC	—	

© 2008 Microchip Technology Inc.

FIGURE 28-13: CAPTURE/COMPARE/PWM TIMINGS (ALL ECCP/CCP MODULES)

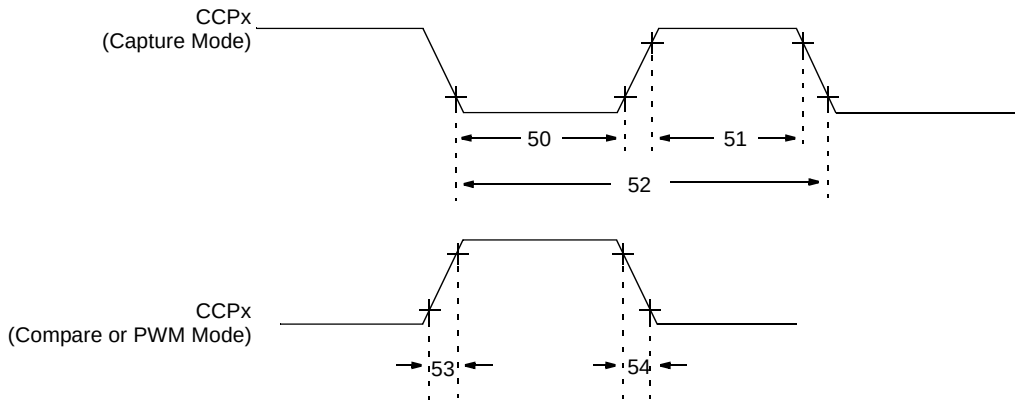

Note: Refer to Figure 28-5 for load conditions.

TABLE 28-14: CAPTURE/COMPARE/PWM REQUIREMENTS (ALL ECCP/CCP MODULES)

Param No.	Symbol	Characteristic			Min	Max	Units	Conditions
50	TccL	CCPx Input Low Time	No prescaler		0.5 TCY + 20	—	ns	
			With prescaler	PIC18**F**XXXX	10	—	ns	
				PIC18**LF**XXXX	20	—	ns	VDD = 2.0V
51	TccH	CCPx Input High Time	No prescaler		0.5 TCY + 20	—	ns	
			With prescaler	PIC18**F**XXXX	10	—	ns	
				PIC18**LF**XXXX	20	—	ns	VDD = 2.0V
52	TccP	CCPx Input Period			$\frac{3\ T_{CY} + 40}{N}$	—	ns	N = prescale value (1, 4 or 16)
53	TccR	CCPx Output Fall Time		PIC18**F**XXXX	—	25	ns	
				PIC18**LF**XXXX	—	45	ns	VDD = 2.0V
54	TccF	CCPx Output Fall Time		PIC18**F**XXXX	—	25	ns	
				PIC18**LF**XXXX	—	45	ns	VDD = 2.0V

FIGURE 28-14: PARALLEL SLAVE PORT TIMING (PIC18F8527/8622/8627/8722)

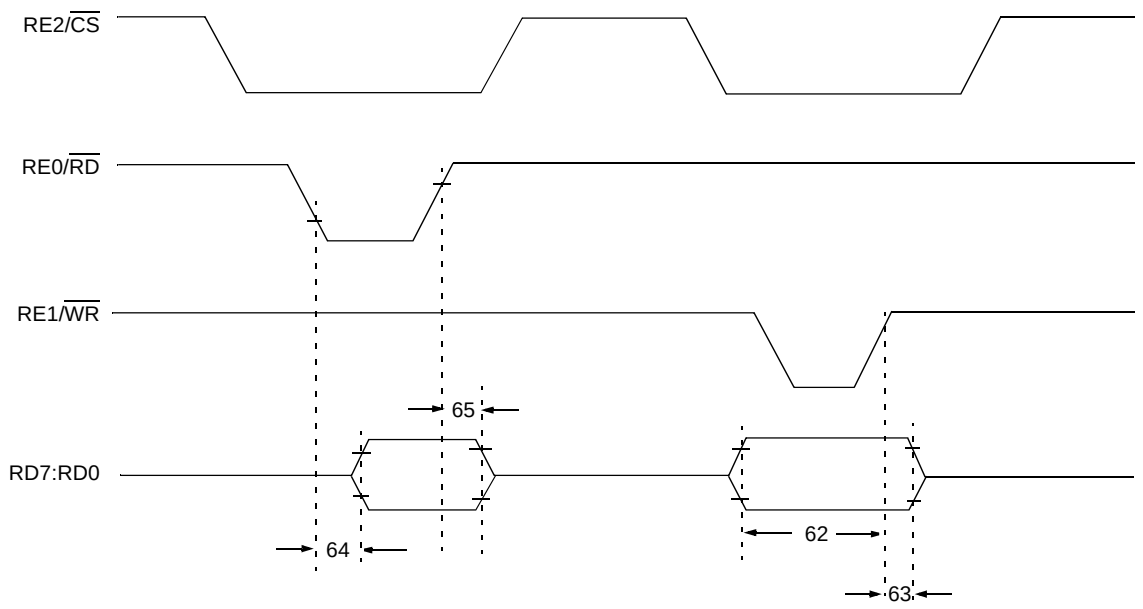

Note: Refer to Figure 28-5 for load conditions.

TABLE 28-15: PARALLEL SLAVE PORT REQUIREMENTS (PIC18F8527/8622/8627/8722)

Param. No.	Symbol	Characteristic		Min	Max	Units	Conditions
62	TdtV2wrH	Data In Valid before $\overline{WR}$ ↑ or $\overline{CS}$ ↑ (setup time)		20	—	ns	
63	TwrH2dtI	$\overline{WR}$ ↑ or $\overline{CS}$ ↑ to Data–In Invalid (hold time)	PIC18**F**XXXX	20	—	ns	
			PIC18**LF**XXXX	35	—	ns	VDD = 2.0V
64	TrdL2dtV	$\overline{RD}$ ↓ and $\overline{CS}$ ↓ to Data–Out Valid		—	80	ns	
65	TrdH2dtI	$\overline{RD}$ ↑ or $\overline{CS}$ ↓ to Data–Out Invalid		10	30	ns	
66	TibfINH	Inhibit of the IBF Flag bit being Cleared from $\overline{WR}$ ↑ or $\overline{CS}$ ↑		—	3 TCY		

© 2008 Microchip Technology Inc.

FIGURE 28-15: EXAMPLE SPI MASTER MODE TIMING (CKE = 0)

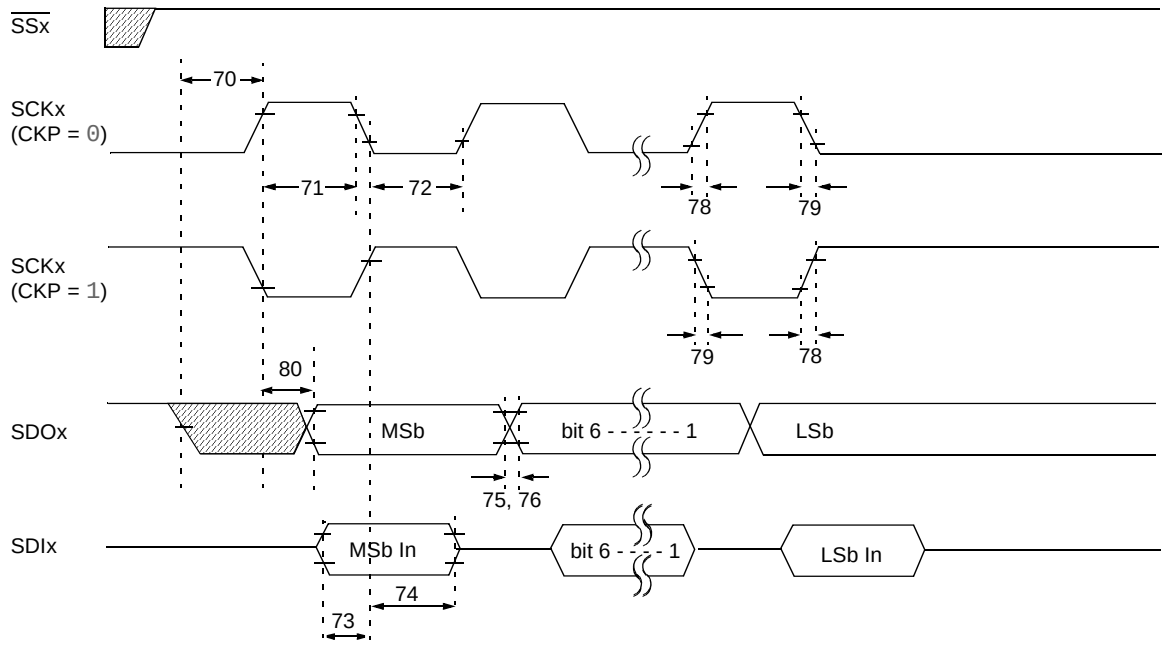

Note: Refer to Figure 28-5 for load conditions.

TABLE 28-16: EXAMPLE SPI MODE REQUIREMENTS (MASTER MODE, CKE = 0)

Param No.	Symbol	Characteristic		Min	Max	Units	Conditions
70	TSSL2SCH, TSSL2SCL	$\overline{SSx}$ ↓ to SCKx ↓ or SCKx ↑ Input		TCY	—	ns	
71	TSCH	SCKx Input High Time (Slave mode)	Continuous	1.25 TCY + 30	—	ns	
71A			Single Byte	40	—	ns	**(Note 1)**
72	TSCL	SCKx Input Low Time (Slave mode)	Continuous	1.25 TCY + 30	—	ns	
72A			Single Byte	40	—	ns	**(Note 1)**
73	TDIV2SCH, TDIV2SCL	Setup Time of SDIx Data Input to SCKx Edge		20	—	ns	
73A	TB2B	Last Clock Edge of Byte 1 to the 1st Clock Edge of Byte 2		1.5 TCY + 40	—	ns	**(Note 2)**
74	TSCH2DIL, TSCL2DIL	Hold Time of SDIx Data Input to SCKx Edge		40	—	ns	
75	TDOR	SDOx Data Output Rise Time	PIC18**F**XXXX	—	25	ns	
			PIC18**LF**XXXX	—	45	ns	VDD = 2.0V
76	TDOF	SDOx Data Output Fall Time		—	25	ns	
78	TSCR	SCKx Output Rise Time (Master mode)	PIC18**F**XXXX	—	25	ns	
			PIC18**LF**XXXX	—	45	ns	VDD = 2.0V
79	TSCF	SCKx Output Fall Time (Master mode)		—	25	ns	
80	TSCH2DOV, TSCL2DOV	SDOx Data Output Valid after SCKx Edge	PIC18**F**XXXX	—	50	ns	
			PIC18**LF**XXXX	—	100	ns	VDD = 2.0V

Note 1: Requires the use of Parameter #73A.
2: Only if Parameter #71A and #72A are used.

FIGURE 28-16: EXAMPLE SPI MASTER MODE TIMING (CKE = 1)

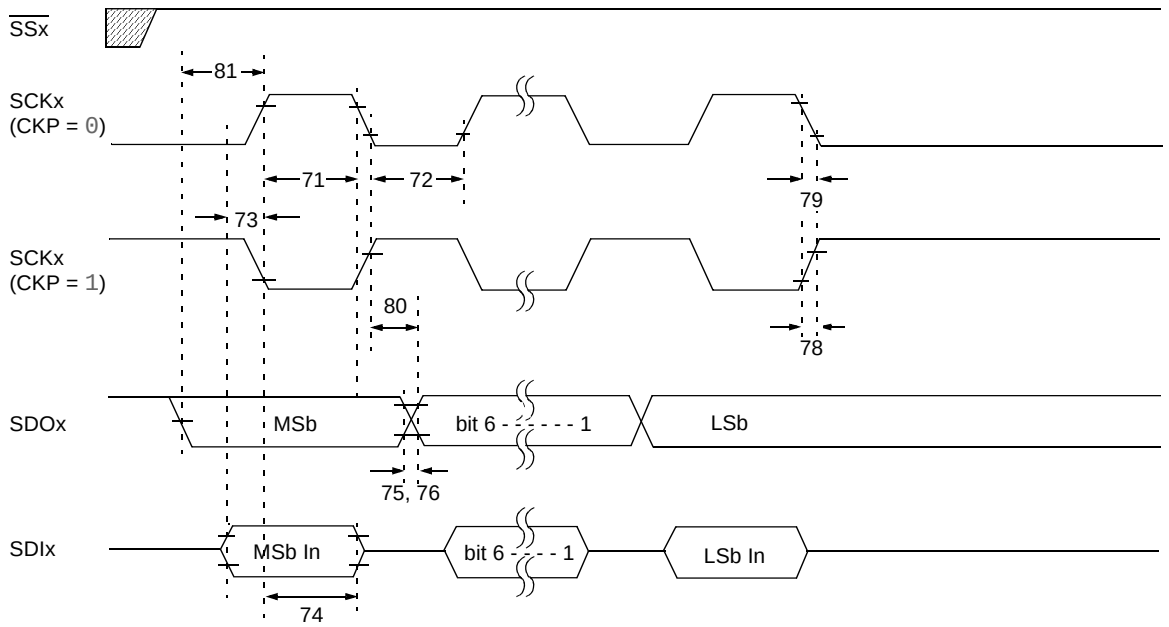

Note: Refer to Figure 28-5 for load conditions.

TABLE 28-17: EXAMPLE SPI MODE REQUIREMENTS (MASTER MODE, CKE = 1)

Param. No.	Symbol	Characteristic		Min	Max	Units	Conditions
71	TSCH	SCKx Input High Time (Slave mode)	Continuous	1.25 TCY + 30	—	ns	
71A			Single Byte	40	—	ns	**(Note 1)**
72	TSCL	SCKx Input Low Time (Slave mode)	Continuous	1.25 TCY + 30	—	ns	
72A			Single Byte	40	—	ns	**(Note 1)**
73	TDIV2SCH, TDIV2SCL	Setup Time of SDIx Data Input to SCKx Edge		20	—	ns	
73A	TB2B	Last Clock Edge of Byte 1 to the 1st Clock Edge of Byte 2		1.5 TCY + 40	—	ns	**(Note 2)**
74	TSCH2DIL, TSCL2DIL	Hold Time of SDIx Data Input to SCKx Edge		40	—	ns	
75	TDOR	SDOx Data Output Rise Time	PIC18**F**XXXX	—	25	ns	
			PIC18**LF**XXXX	—	45	ns	VDD = 2.0V
76	TDOF	SDOx Data Output Fall Time		—	25	ns	
78	TSCR	SCKx Output Rise Time (Master mode)	PIC18**F**XXXX	—	25	ns	
			PIC18**LF**XXXX	—	45	ns	VDD = 2.0V
79	TSCF	SCKx Output Fall Time (Master mode)		—	25	ns	
80	TSCH2DOV, TSCL2DOV	SDOx Data Output Valid after SCKx Edge	PIC18**F**XXXX	—	50	ns	
			PIC18**LF**XXXX	—	100	ns	VDD = 2.0V
81	TDOV2SCH, TDOV2SCL	SDOx Data Output Setup to SCKx Edge		TCY	—	ns	

Note 1: Requires the use of Parameter #73A.

2: Only if Parameter #71A and #72A are used.

© 2008 Microchip Technology Inc.

FIGURE 28-17: EXAMPLE SPI SLAVE MODE TIMING (CKE = 0)

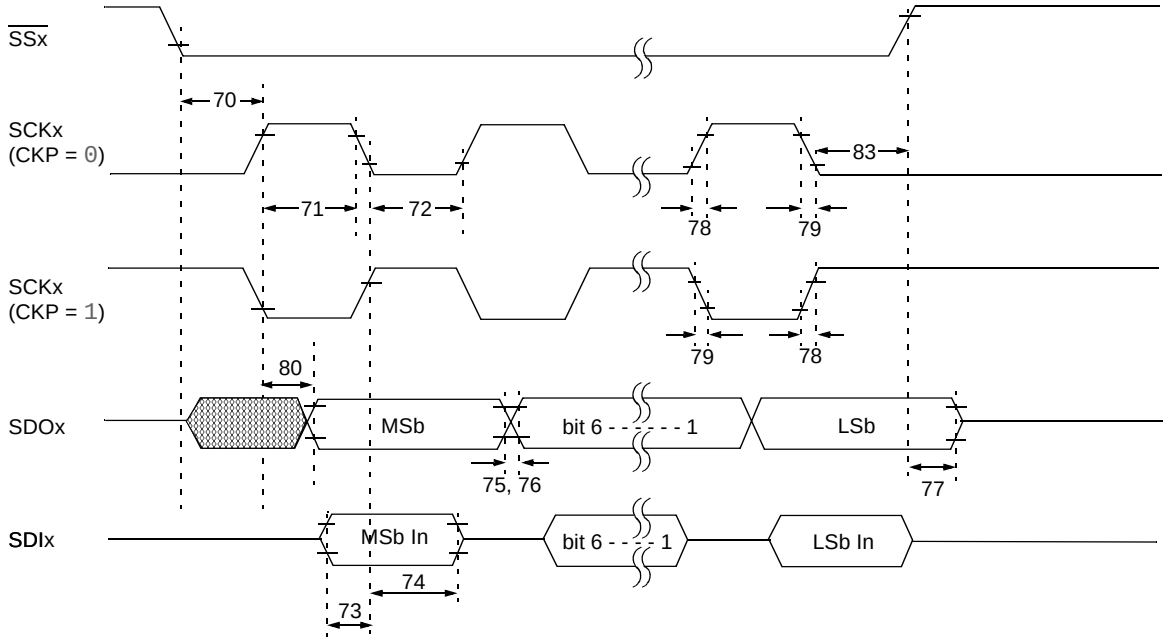

Note: Refer to Figure 28-5 for load conditions.

TABLE 28-18: EXAMPLE SPI MODE REQUIREMENTS (SLAVE MODE TIMING, CKE = 0)

Param No.	Symbol	Characteristic		Min	Max	Units	Conditions
70	TSSL2SCH, TSSL2SCL	$\overline{SSx}$ ↓ to SCKx ↓ or SCKx ↑ Input		3 TCY	—	ns	
71	TSCH	SCKx Input High Time (Slave mode)	Continuous	1.25 TCY + 30	—	ns	
71A			Single Byte	40	—	ns	**(Note 1)**
72	TSCL	SCKx Input Low Time (Slave mode)	Continuous	1.25 TCY + 30	—	ns	
72A			Single Byte	40	—	ns	**(Note 1)**
73	TDIV2SCH, TDIV2SCL	Setup Time of SDIx Data Input to SCKx Edge		20	—	ns	
73A	TB2B	Last Clock Edge of Byte 1 to the First Clock Edge of Byte 2		1.5 TCY + 40	—	ns	**(Note 2)**
74	TSCH2DIL, TSCL2DIL	Hold Time of SDIx Data Input to SCKx Edge		40	—	ns	
75	TDOR	SDOx Data Output Rise Time	PIC18**F**XXXX	—	25	ns	
			PIC18**LF**XXXX	—	45	ns	VDD = 2.0V
76	TDOF	SDOx Data Output Fall Time		—	25	ns	
77	TSSH2DOZ	$\overline{SSx}$ ↑ to SDOx Output High-Impedance		10	50	ns	
78	TSCR	SCKx Output Rise Time (Master mode)	PIC18**F**XXXX	—	25	ns	
			PIC18**LF**XXXX	—	45	ns	VDD = 2.0V
79	TSCF	SCKx Output Fall Time (Master mode)		—	25	ns	
80	TSCH2DOV, TSCL2DOV	SDOx Data Output Valid after SCKx Edge	PIC18**F**XXXX	—	50	ns	
			PIC18**LF**XXXX	—	100	ns	VDD = 2.0V
83	TSCH2SSH, TSCL2SSH	$\overline{SSx}$ ↑ after SCKx Edge		1.5 TCY + 40	—	ns	

Note 1: Requires the use of Parameter #73A.

2: Only if Parameter #71A and #72A are used.

FIGURE 28-18: EXAMPLE SPI SLAVE MODE TIMING (CKE = 1)

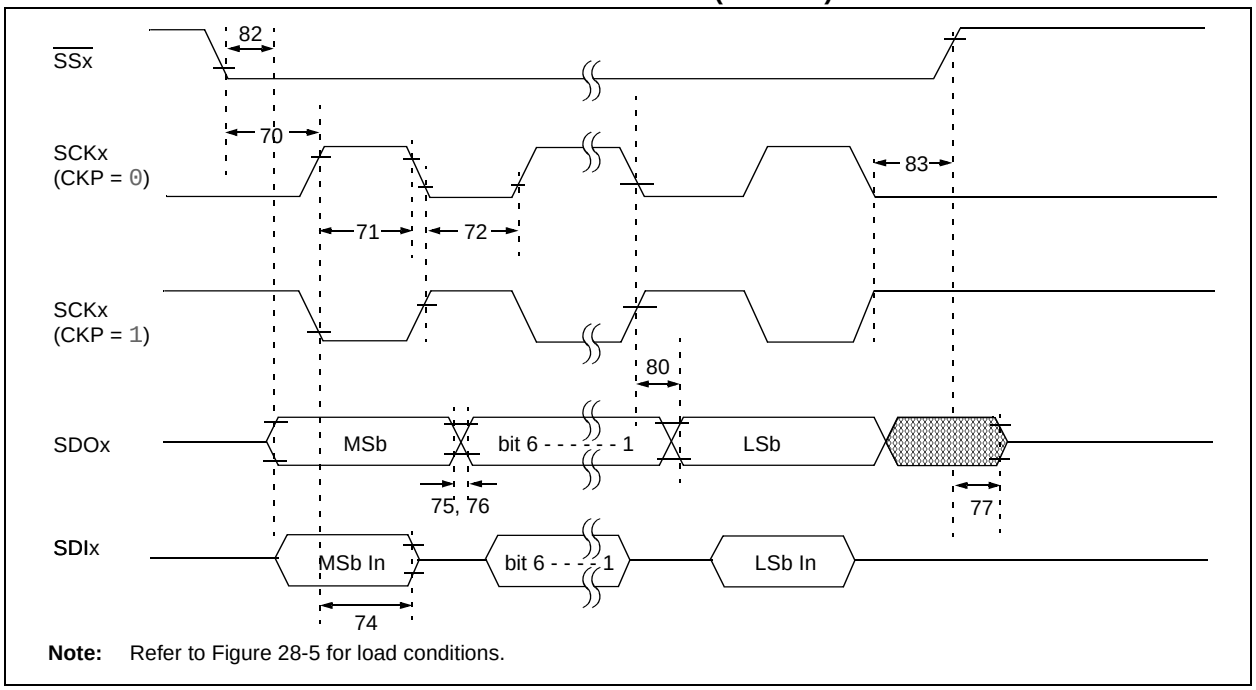

Note: Refer to Figure 28-5 for load conditions.

TABLE 28-19: EXAMPLE SPI SLAVE MODE REQUIREMENTS (CKE = 1)

Param No.	Symbol	Characteristic		Min	Max	Units	Conditions
70	TSSL2SCH, TSSL2SCL	$\overline{SSx}$ ↓ to SCKx ↓ or SCKx ↑ Input		3 TCY	—	ns	
71	TSCH	SCKx Input High Time (Slave mode)	Continuous	1.25 TCY + 30	—	ns	
71A			Single Byte	40	—	ns	**(Note 1)**
72	TSCL	SCKx Input Low Time (Slave mode)	Continuous	1.25 TCY + 30	—	ns	
72A			Single Byte	40	—	ns	**(Note 1)**
73A	TB2B	Last Clock Edge of Byte 1 to the First Clock Edge of Byte 2		1.5 TCY + 40	—	ns	**(Note 2)**
74	TSCH2DIL, TSCL2DIL	Hold Time of SDIx Data Input to SCKx Edge		40	—	ns	
75	TDOR	SDOx Data Output Rise Time	PIC18**F**XXXX	—	25	ns	
			PIC18**LF**XXXX	—	45	ns	VDD = 2.0V
76	TDOF	SDOx Data Output Fall Time		—	25	ns	
77	TSSH2DOZ	$\overline{SSx}$ ↑ to SDOx Output High-Impedance		10	50	ns	
78	TSCR	SCKx Output Rise Time (Master mode)	PIC18**F**XXXX	—	25	ns	
			PIC18**LF**XXXX	—	45	ns	VDD = 2.0V
79	TSCF	SCKx Output Fall Time (Master mode)		—	25	ns	
80	TSCH2DOV, TSCL2DOV	SDOx Data Output Valid after SCKx Edge	PIC18**F**XXXX	—	50	ns	
			PIC18**LF**XXXX	—	100	ns	VDD = 2.0V
82	TSSL2DOV	SDOx Data Output Valid after $\overline{SSx}$ ↓ Edge	PIC18**F**XXXX	—	50	ns	
			PIC18**LF**XXXX	—	100	ns	VDD = 2.0V
83	TSCH2SSH, TSCL2SSH	$\overline{SSx}$ ↑ after SCKx Edge		1.5 TCY + 40	—	ns	

Note 1: Requires the use of Parameter #73A.

2: Only if Parameter #71A and #72A are used.

© 2008 Microchip Technology Inc.

FIGURE 28-19: I²C™ BUS START/STOP BITS TIMING

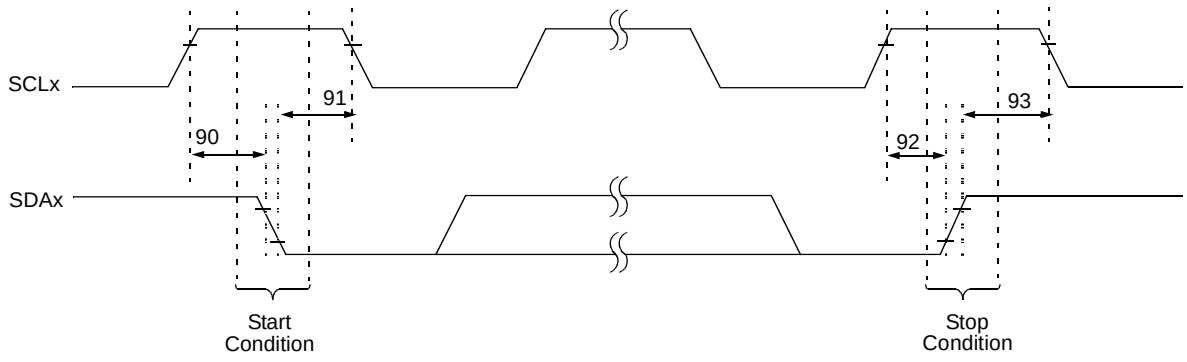

Note: Refer to Figure 28-5 for load conditions.

TABLE 28-20: I²C™ BUS START/STOP BITS REQUIREMENTS (SLAVE MODE)

Param. No.	Symbol	Characteristic		Min	Max	Units	Conditions
90	TSU:STA	Start Condition Setup Time	100 kHz mode	4700	—	ns	Only relevant for Repeated Start condition
			400 kHz mode	600	—		
91	THD:STA	Start Condition Hold Time	100 kHz mode	4000	—	ns	After this period, the first clock pulse is generated
			400 kHz mode	600	—		
92	TSU:STO	Stop Condition Setup Time	100 kHz mode	4700	—	ns	
			400 kHz mode	600	—		
93	THD:STO	Stop Condition Hold Time	100 kHz mode	4000	—	ns	
			400 kHz mode	600	—		

FIGURE 28-20: I²C™ BUS DATA TIMING

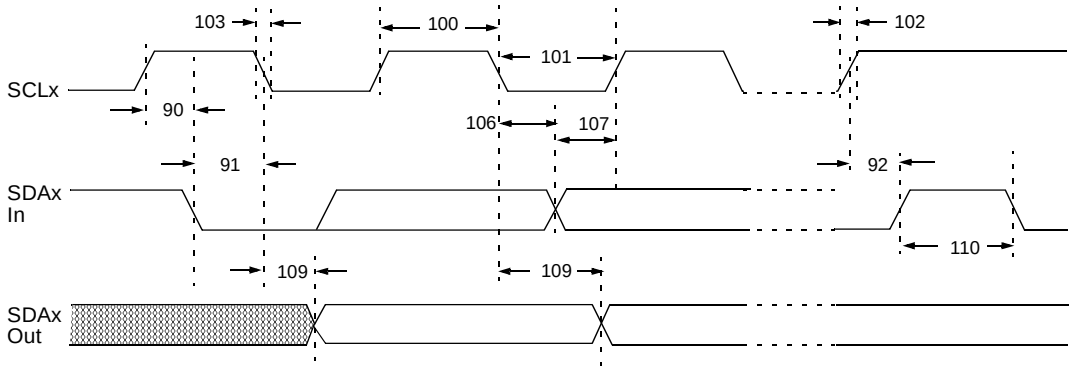

Note: Refer to Figure 28-5 for load conditions.

TABLE 28-21: I²C™ BUS DATA REQUIREMENTS (SLAVE MODE)

Param. No.	Symbol	Characteristic		Min	Max	Units	Conditions
100	THIGH	Clock High Time	100 kHz mode	4.0	—	μs	PIC18FXXXX must operate at a minimum of 1.5 MHz
			400 kHz mode	0.6	—	μs	PIC18FXXXX must operate at a minimum of 10 MHz
			SSP Module	1.5 TCY	—		
101	TLOW	Clock Low Time	100 kHz mode	4.7	—	μs	PIC18FXXXX must operate at a minimum of 1.5 MHz
			400 kHz mode	1.3	—	μs	PIC18FXXXX must operate at a minimum of 10 MHz
			SSP Module	1.5 TCY	—		
102	TR	SDAx and SCLx Rise Time	100 kHz mode	—	1000	ns	
			400 kHz mode	20 + 0.1 CB	300	ns	CB is specified to be from 10 to 400 pF
103	TF	SDAx and SCLx Fall Time	100 kHz mode	—	300	ns	
			400 kHz mode	20 + 0.1 CB	300	ns	CB is specified to be from 10 to 400 pF
90	TSU:STA	Start Condition Setup Time	100 kHz mode	4.7	—	μs	Only relevant for Repeated Start condition
			400 kHz mode	0.6	—	μs	
91	THD:STA	Start Condition Hold Time	100 kHz mode	4.0	—	μs	After this period, the first clock pulse is generated
			400 kHz mode	0.6	—	μs	
106	THD:DAT	Data Input Hold Time	100 kHz mode	0	—	ns	
			400 kHz mode	0	0.9	μs	
107	TSU:DAT	Data Input Setup Time	100 kHz mode	250	—	ns	**(Note 2)**
			400 kHz mode	100	—	ns	
92	TSU:STO	Stop Condition Setup Time	100 kHz mode	4.7	—	μs	
			400 kHz mode	0.6	—	μs	
109	TAA	Output Valid from Clock	100 kHz mode	—	3500	ns	**(Note 1)**
			400 kHz mode	—	—	ns	
110	TBUF	Bus Free Time	100 kHz mode	4.7	—	μs	Time the bus must be free before a new transmission can start
			400 kHz mode	1.3	—	μs	
D102	CB	Bus Capacitive Loading		—	400	pF	

Note 1: As a transmitter, the device must provide this internal minimum delay time to bridge the undefined region (min. 300 ns) of the falling edge of SCLx to avoid unintended generation of Start or Stop conditions.

2: A Fast mode I²C™ bus device can be used in a Standard mode I²C bus system, but the requirement, TSU:DAT ≥ 250 ns, must then be met. This will automatically be the case if the device does not stretch the LOW period of the SCLx signal. If such a device does stretch the LOW period of the SCLx signal, it must output the next data bit to the SDAx line, TR max. + TSU:DAT = 1000 + 250 = 1250 ns (according to the Standard mode I²C bus specification), before the SCLx line is released.

© 2008 Microchip Technology Inc.

FIGURE 28-21: MASTER SSP I²C™ BUS START/STOP BITS TIMING WAVEFORMS

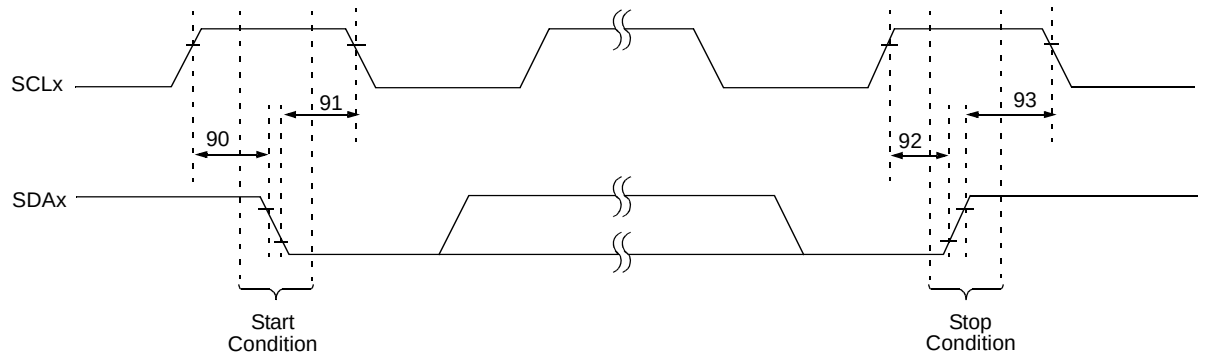

Note: Refer to Figure 28-5 for load conditions.

TABLE 28-22: MASTER SSP I²C™ BUS START/STOP BITS REQUIREMENTS

Param. No.	Symbol	Characteristic		Min	Max	Units	Conditions
90	TSU:STA	Start Condition Setup Time	100 kHz mode	2(TOSC)(BRG + 1)	—	ns	Only relevant for Repeated Start condition
			400 kHz mode	2(TOSC)(BRG + 1)	—		
			1 MHz mode(1)	2(TOSC)(BRG + 1)	—		
91	THD:STA	Start Condition Hold Time	100 kHz mode	2(TOSC)(BRG + 1)	—	ns	After this period, the first clock pulse is generated
			400 kHz mode	2(TOSC)(BRG + 1)	—		
			1 MHz mode(1)	2(TOSC)(BRG + 1)	—		
92	TSU:STO	Stop Condition Setup Time	100 kHz mode	2(TOSC)(BRG + 1)	—	ns	
			400 kHz mode	2(TOSC)(BRG + 1)	—		
			1 MHz mode(1)	2(TOSC)(BRG + 1)	—		
93	THD:STO	Stop Condition Hold Time	100 kHz mode	2(TOSC)(BRG + 1)	—	ns	
			400 kHz mode	2(TOSC)(BRG + 1)	—		
			1 MHz mode(1)	2(TOSC)(BRG + 1)	—		

Note 1: Maximum pin capacitance = 10 pF for all I²C™ pins.

FIGURE 28-22: MASTER SSP I²C™ BUS DATA TIMING

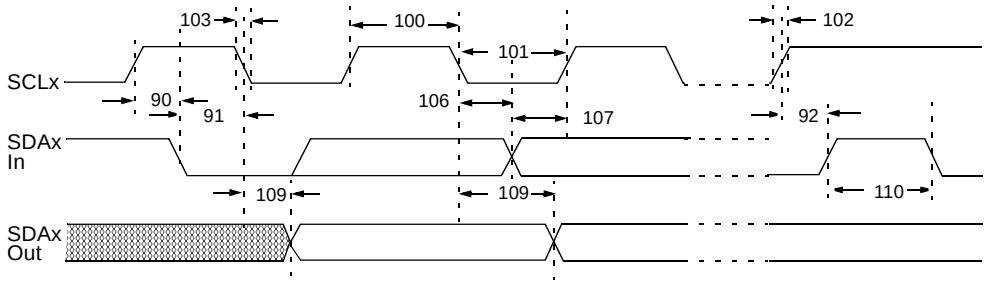

Note: Refer to Figure 28-5 for load conditions.

TABLE 28-23: MASTER SSP I²C™ BUS DATA REQUIREMENTS

Param. No.	Symbol	Characteristic		Min	Max	Units	Conditions
100	THIGH	Clock High Time	100 kHz mode	2(TOSC)(BRG + 1)	—	ms	
			400 kHz mode	2(TOSC)(BRG + 1)	—	ms	
			1 MHz mode(1)	2(TOSC)(BRG + 1)	—	ms	
101	TLOW	Clock Low Time	100 kHz mode	2(TOSC)(BRG + 1)	—	ms	
			400 kHz mode	2(TOSC)(BRG + 1)	—	ms	
			1 MHz mode(1)	2(TOSC)(BRG + 1)	—	ms	
102	TR	SDAx and SCLx Rise Time	100 kHz mode	—	1000	ns	CB is specified to be from 10 to 400 pF
			400 kHz mode	20 + 0.1 CB	300	ns	
			1 MHz mode(1)	—	300	ns	
103	TF	SDAx and SCLx Fall Time	100 kHz mode	—	300	ns	CB is specified to be from 10 to 400 pF
			400 kHz mode	20 + 0.1 CB	300	ns	
			1 MHz mode(1)	—	100	ns	
90	TSU:STA	Start Condition Setup Time	100 kHz mode	2(TOSC)(BRG + 1)	—	ms	Only relevant for Repeated Start condition
			400 kHz mode	2(TOSC)(BRG + 1)	—	ms	
			1 MHz mode(1)	2(TOSC)(BRG + 1)	—	ms	
91	THD:STA	Start Condition Hold Time	100 kHz mode	2(TOSC)(BRG + 1)	—	ms	After this period, the first clock pulse is generated
			400 kHz mode	2(TOSC)(BRG + 1)	—	ms	
			1 MHz mode(1)	2(TOSC)(BRG + 1)	—	ms	
106	THD:DAT	Data Input Hold Time	100 kHz mode	0	—	ns	
			400 kHz mode	0	0.9	ms	
			1 MHz mode(1)	TBD	—	ns	
107	TSU:DAT	Data Input Setup Time	100 kHz mode	250	—	ns	**(Note 2)**
			400 kHz mode	100	—	ns	
			1 MHz mode(1)	TBD	—	ns	
92	TSU:STO	Stop Condition Setup Time	100 kHz mode	2(TOSC)(BRG + 1)	—	ms	
			400 kHz mode	2(TOSC)(BRG + 1)	—	ms	
			1 MHz mode(1)	2(TOSC)(BRG + 1)	—	ms	
109	TAA	Output Valid from Clock	100 kHz mode	—	3500	ns	
			400 kHz mode	—	1000	ns	
			1 MHz mode(1)	—	—	ns	
110	TBUF	Bus Free Time	100 kHz mode	4.7	—	ms	Time the bus must be free before a new transmission can start
			400 kHz mode	1.3	—	ms	
			1 MHz mode(1)	TBD	—	ms	
D102	CB	Bus Capacitive Loading		—	400	pF	

Legend: TBD = To Be Determined

Note 1: Maximum pin capacitance = 10 pF for all I²C™ pins.

2: A Fast mode I²C bus device can be used in a Standard mode I²C bus system, but parameter #107 ≥ 250 ns must then be met. This will automatically be the case if the device does not stretch the LOW period of the SCLx signal. If such a device does stretch the LOW period of the SCLx signal, it must output the next data bit to the SDAx line, parameter #102 + parameter #107 = 1000 + 250 = 1250 ns (for 100 kHz mode,) before the SCLx line is released.

© 2008 Microchip Technology Inc.

FIGURE 28-23: EUSART SYNCHRONOUS TRANSMISSION (MASTER/SLAVE) TIMING

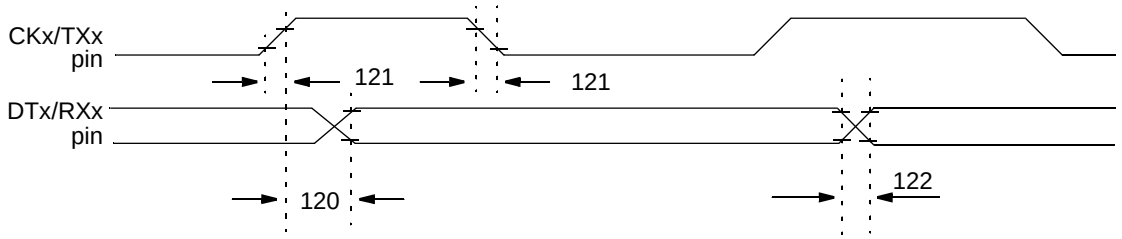

Note: Refer to Figure 28-5 for load conditions.

TABLE 28-24: EUSART SYNCHRONOUS TRANSMISSION REQUIREMENTS

Param No.	Symbol	Characteristic		Min	Max	Units	Conditions
120	TCKH2DTV	SYNC XMIT (MASTER and SLAVE) Clock High to Data Out Valid	PIC18**F**XXXX	—	40	ns	
			PIC18**LF**XXXX	—	100	ns	VDD = 2.0V
121	TCKRF	Clock Out Rise Time and Fall Time (Master mode)	PIC18**F**XXXX	—	20	ns	
			PIC18**LF**XXXX	—	50	ns	VDD = 2.0V
122	TDTRF	Data Out Rise Time and Fall Time	PIC18**F**XXXX	—	20	ns	
			PIC18**LF**XXXX	—	50	ns	VDD = 2.0V

FIGURE 28-24: EUSART SYNCHRONOUS RECEIVE (MASTER/SLAVE) TIMING

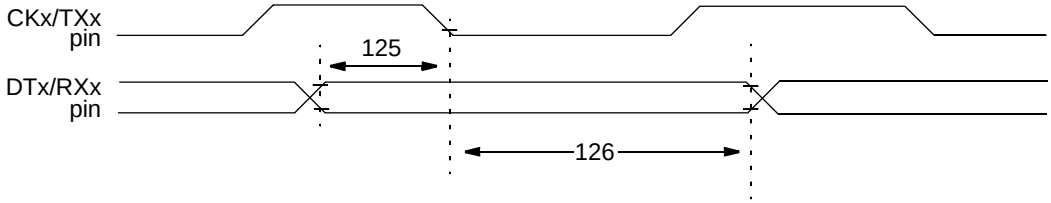

Note: Refer to Figure 28-5 for load conditions.

TABLE 28-25: EUSART SYNCHRONOUS RECEIVE REQUIREMENTS

Param. No.	Symbol	Characteristic	Min	Max	Units	Conditions
125	TDTV2CKL	SYNC RCV (MASTER and SLAVE) Data Hold before CKx ↓ (DTx hold time)	10	—	ns	
126	TCKL2DTL	Data Hold after CKx ↓ (DTx hold time)	15	—	ns	

TABLE 28-26: A/D CONVERTER CHARACTERISTICS: PIC18F6X27/6X22/8X27/8X22 (INDUSTRIAL)
PIC18LF6X27/6X22/8X27/8X22 (INDUSTRIAL)

Param No.	Symbol	Characteristic		Min	Typ	Max	Units	Conditions
A01	NR	Resolution		—	—	10	bit	ΔVREF ≥ 3.0V
A03	EIL	Integral Linearity Error		—	—	<±1	LSb	ΔVREF ≥ 3.0V
A04	EDL	Differential Linearity Error		—	—	<±1	LSb	ΔVREF ≥ 3.0V
A06	EOFF	Offset Error		—	—	<±2	LSb	ΔVREF ≥ 3.0V
A07	EGN	Gain Error		—	—	<±1	LSb	ΔVREF ≥ 3.0V
A10	—	Monotonicity		Guaranteed(1)			—	VSS ≤ VAIN ≤ VREF
A20	ΔVREF	Reference Voltage Range (VREFH – VREFL)		1.8 3	— —	— —	V V	VDD < 3.0V VDD ≥ 3.0V
A21	VREFH	Reference Voltage High		VSS	—	VREFH	V	
A22	VREFL	Reference Voltage Low		VSS – 0.3V	—	VDD – 3.0V	V	
A25	VAIN	Analog Input Voltage		VREFL	—	VREFH	V	
A30	ZAIN	Recommended Impedance of Analog Voltage Source		—	—	2.5	kΩ	
A40	IAD	A/D Current from VDD	PIC18FXXXX	—	180	—	μA	Average current during conversion
			PIC18LFXXXX	—	90	—	μA	
A50	IREF	VREF Input Current(2)		— —	— —	5 150	μA μA	During VAIN acquisition. During A/D conversion cycle.

Note 1: The A/D conversion result never decreases with an increase in the input voltage and has no missing codes.

2: VREFH current is from RA3/AN3/VREF+ pin or VDD, whichever is selected as the VREFH source. VREFL current is from RA2/AN2/VREF- pin or VSS, whichever is selected as the VREFL source.

FIGURE 28-25: A/D CONVERSION TIMING

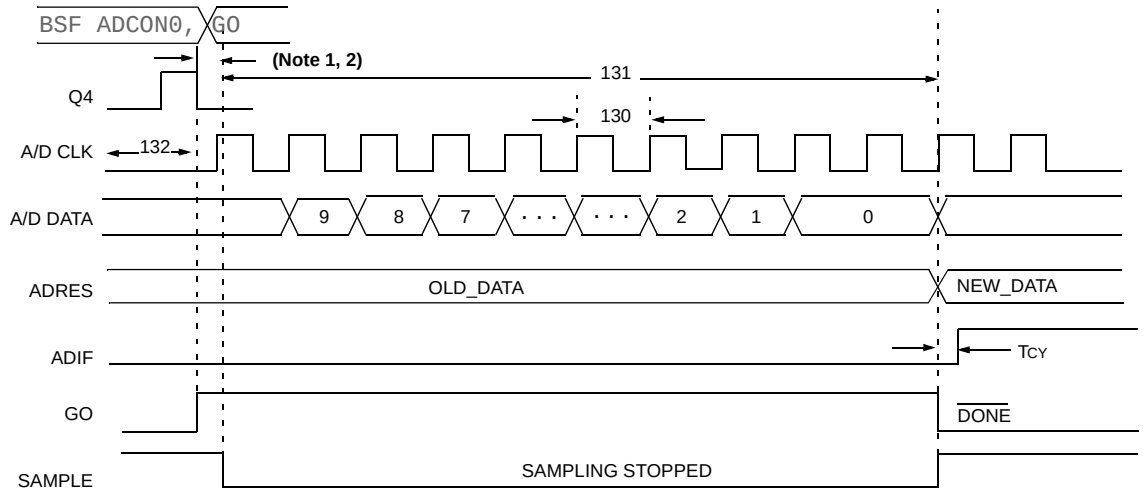

Note 1: If the A/D clock source is selected as RC, a time of TCY is added before the A/D clock starts. This allows the SLEEP instruction to be executed.

2: This is a minimal RC delay (typically 100 ns), which also disconnects the holding capacitor from the analog input.

© 2008 Microchip Technology Inc.

TABLE 28-27: A/D CONVERSION REQUIREMENTS

Param No.	Symbol	Characteristic		Min	Max	Units	Conditions
130	TAD	A/D Clock Period	PIC18**F**XXXX	0.7	25.0(1)	μs	TOSC based, VREF ≥ 3.0V
			PIC18**LF**XXXX	1.4	25.0(1)	μs	VDD = 2.0V; TOSC based, VREF full range
			PIC18**F**XXXX	—	1	μs	A/D RC mode
			PIC18**LF**XXXX	—	3	μs	VDD = 2.0V; A/D RC mode
131	TCNV	Conversion Time (not including acquisition time) **(Note 2)**		11	12	TAD	
132	TACQ	Acquisition Time **(Note 3)**		1.4	—	μs	-40°C to +85°C
135	TSWC	Switching Time from Convert → Sample		—	**(Note 4)**		
137	TDIS	Discharge Time		0.2	—	μs	

Legend: TBD = To Be Determined

Note 1: The time of the A/D clock period is dependent on the device frequency and the TAD clock divider.

2: ADRES register may be read on the following TCY cycle.

3: The time for the holding capacitor to acquire the “New” input voltage when the voltage changes full scale after the conversion (VDD to VSS or VSS to VDD). The source impedance (*RS*) on the input channels is 50Ω.

4: On the following cycle of the device clock.

NOTES:

© 2008 Microchip Technology Inc.

29.0 PACKAGING INFORMATION

29.1 Package Marking Information

64-Lead TQFP

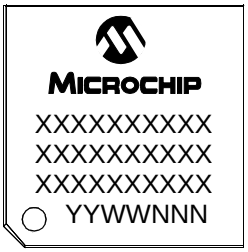

Example

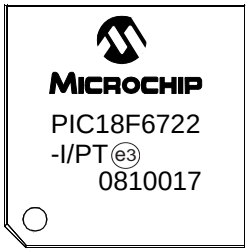

80-Lead TQFP

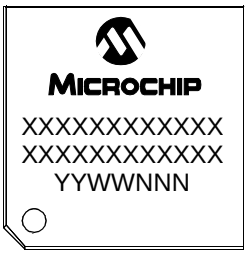

Example

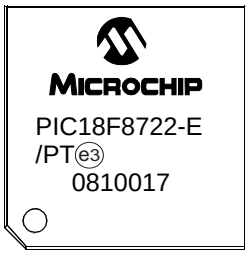

Legend:	XX...X	Product-specific information
	Y	Year code (last digit of calendar year)
	YY	Year code (last 2 digits of calendar year)
	WW	Week code (week of January 1 is week ‘01’)
	NNN	Alphanumeric traceability code
	e3	Pb-free JEDEC designator for Matte Tin (Sn)
	*	This package is Pb-free. The Pb-free JEDEC designator (e3) can be found on the outer packaging for this package.

Note: In the event the full Microchip part number cannot be marked on one line, it will be carried over to the next line, thus limiting the number of available characters for customer-specific information.

29.2 Package Details

The following sections give the technical details of the packages.

64-Lead Plastic Thin Quad Flatpack (PT) – 10x10x1 mm Body, 2.00 mm [TQFP]

Note: For the most current package drawings, please see the Microchip Packaging Specification located at http://www.microchip.com/packaging

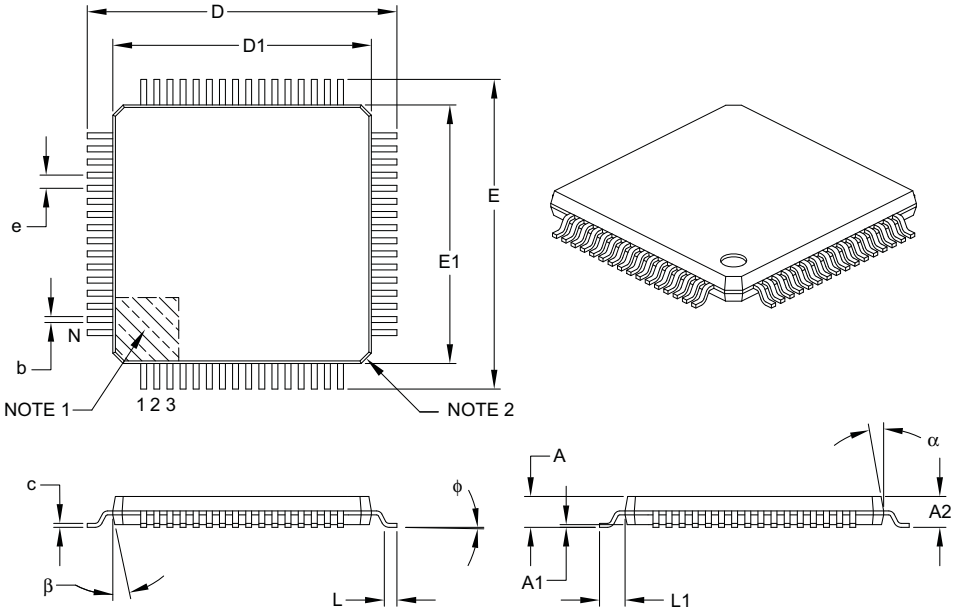

Units		MILLIMETERS		
Dimension Limits		MIN	NOM	MAX
Number of Leads	N	64		
Lead Pitch	e	0.50 BSC		
Overall Height	A	–	–	1.20
Molded Package Thickness	A2	0.95	1.00	1.05
Standoff	A1	0.05	–	0.15
Foot Length	L	0.45	0.60	0.75
Footprint	L1	1.00 REF		
Foot Angle	φ	0°	3.5°	7°
Overall Width	E	12.00 BSC		
Overall Length	D	12.00 BSC		
Molded Package Width	E1	10.00 BSC		
Molded Package Length	D1	10.00 BSC		
Lead Thickness	c	0.09	–	0.20
Lead Width	b	0.17	0.22	0.27
Mold Draft Angle Top	α	11°	12°	13°
Mold Draft Angle Bottom	β	11°	12°	13°

Notes:

1. Pin 1 visual index feature may vary, but must be located within the hatched area.
2. Chamfers at corners are optional; size may vary.
3. Dimensions D1 and E1 do not include mold flash or protrusions. Mold flash or protrusions shall not exceed 0.25 mm per side.
4. Dimensioning and tolerancing per ASME Y14.5M.

   BSC: Basic Dimension. Theoretically exact value shown without tolerances.

   REF: Reference Dimension, usually without tolerance, for information purposes only.

Microchip Technology Drawing C04-085B

© 2008 Microchip Technology Inc.

64-Lead Plastic Thin Quad Flatpack (PT) – 10x10x1 mm Body, 2.00 mm [TQFP]

Note: For the most current package drawings, please see the Microchip Packaging Specification located at http://www.microchip.com/packaging

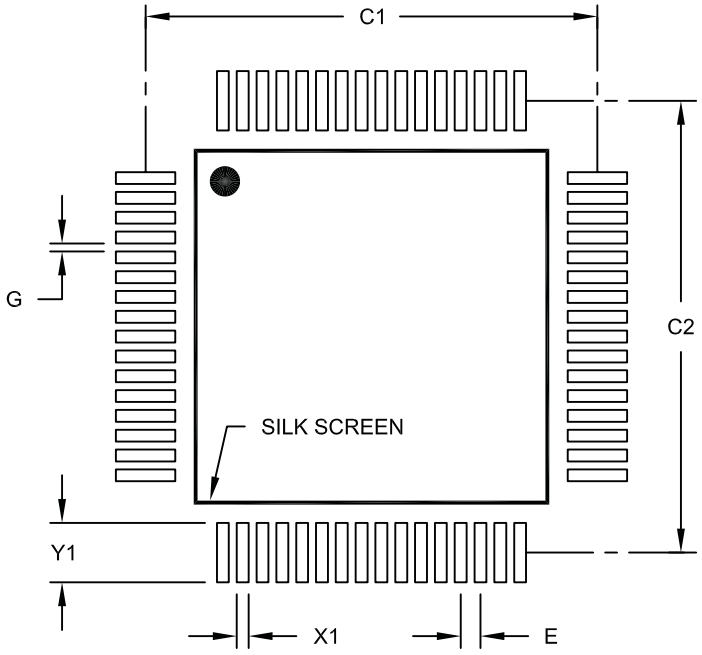

RECOMMENDED LAND PATTERN

Units		MILLIMETERS		
Dimension Limits		MIN	NOM	MAX
Contact Pitch	E		0.50 BSC	
Contact Pad Spacing	C1		11.40	
Contact Pad Spacing	C2		11.40	
Contact Pad Width (X64)	X1			0.30
Contact Pad Length (X64)	Y1			1.50
Distance Between Pads	G	0.20		

Notes:

1. Dimensioning and tolerancing per ASME Y14.5M
   BSC: Basic Dimension. Theoretically exact value shown without tolerances.

Microchip Technology Drawing No. C04-2085A

80-Lead Plastic Thin Quad Flatpack (PT) – 12x12x1 mm Body, 2.00 mm [TQFP]

Note: For the most current package drawings, please see the Microchip Packaging Specification located at http://www.microchip.com/packaging

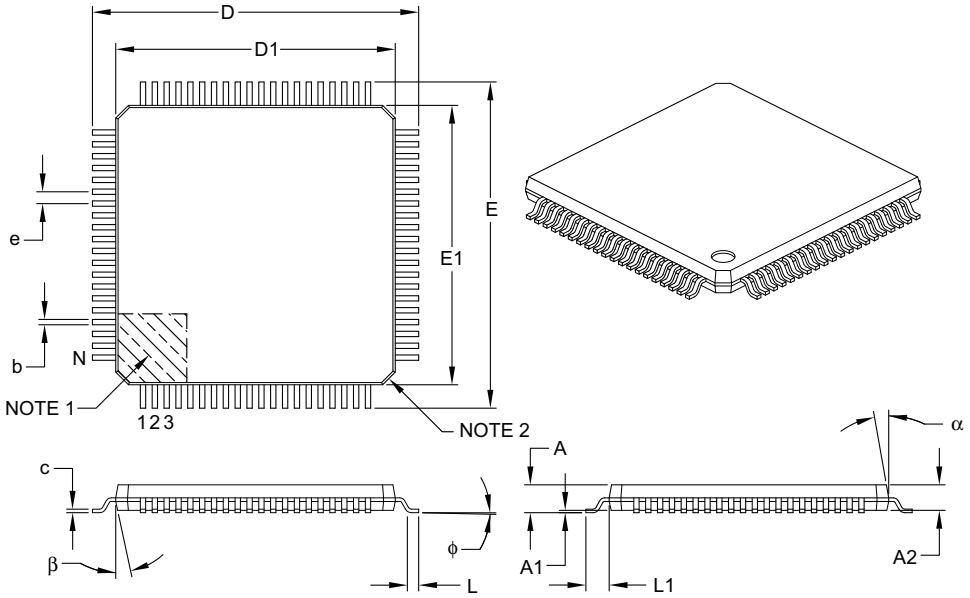

Units		MILLIMETERS		
Dimension Limits		MIN	NOM	MAX
Number of Leads	N	80		
Lead Pitch	e	0.50 BSC		
Overall Height	A	–	–	1.20
Molded Package Thickness	A2	0.95	1.00	1.05
Standoff	A1	0.05	–	0.15
Foot Length	L	0.45	0.60	0.75
Footprint	L1	1.00 REF		
Foot Angle	ϕ	0°	3.5°	7°
Overall Width	E	14.00 BSC		
Overall Length	D	14.00 BSC		
Molded Package Width	E1	12.00 BSC		
Molded Package Length	D1	12.00 BSC		
Lead Thickness	c	0.09	–	0.20
Lead Width	b	0.17	0.22	0.27
Mold Draft Angle Top	α	11°	12°	13°
Mold Draft Angle Bottom	β	11°	12°	13°

Notes:

1. Pin 1 visual index feature may vary, but must be located within the hatched area.
2. Chamfers at corners are optional; size may vary.
3. Dimensions D1 and E1 do not include mold flash or protrusions. Mold flash or protrusions shall not exceed 0.25 mm per side.
4. Dimensioning and tolerancing per ASME Y14.5M.

   BSC: Basic Dimension. Theoretically exact value shown without tolerances.
   REF: Reference Dimension, usually without tolerance, for information purposes only.

Microchip Technology Drawing C04-092B

© 2008 Microchip Technology Inc.

80-Lead Plastic Thin Quad Flatpack (PT) – 12x12x1 mm Body, 2.00 mm [TQFP]

Note: For the most current package drawings, please see the Microchip Packaging Specification located at http://www.microchip.com/packaging

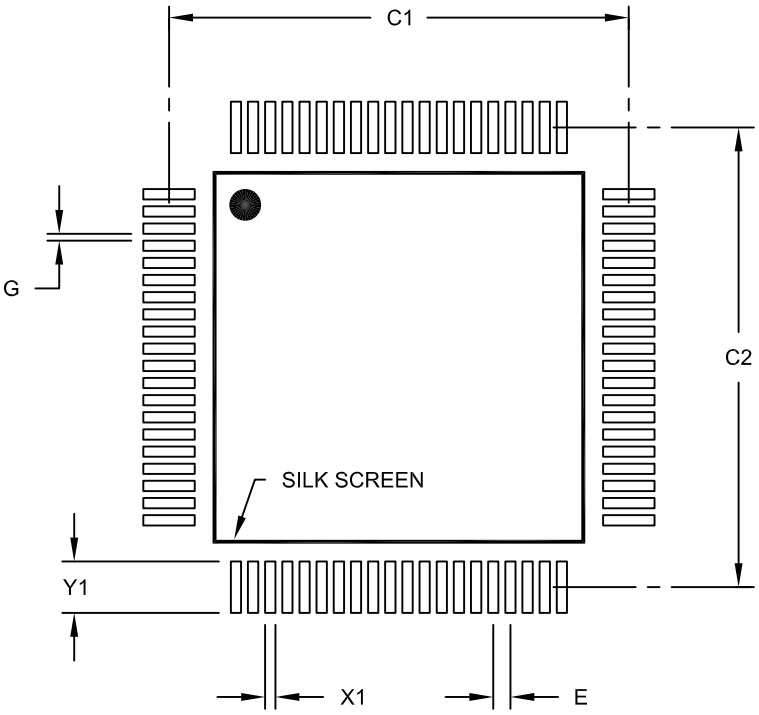

RECOMMENDED LAND PATTERN

Units		MILLIMETERS		
Dimension Limits		MIN	NOM	MAX
Contact Pitch	E		0.50 BSC	
Contact Pad Spacing	C1		13.40	
Contact Pad Spacing	C2		13.40	
Contact Pad Width (X80)	X1			0.30
Contact Pad Length (X80)	Y1			1.50
Distance Between Pads	G	0.20		

Notes:

1. Dimensioning and tolerancing per ASME Y14.5M
   BSC: Basic Dimension. Theoretically exact value shown without tolerances.

Microchip Technology Drawing No. C04-2092A

NOTES:

© 2008 Microchip Technology Inc.

APPENDIX A: REVISION HISTORY

Revision A (September 2004)

Original data sheet for the PIC18F8722 family of devices.

Revision B (December 2004)

This revision includes updates to the Electrical Specifications in **Section 28.0 "Electrical Characteristics"**, minor corrections to the data sheet text and information to support the following devices has been added:

- PIC18F6527
- PIC18F6622
- PIC18F8527
- PIC18F8622
- PIC18LF6527
- PIC18LF6622
- PIC18LF8527
- PIC18LF8622

Revision C (October 2008)

Updated some specifications in **Section 28.0 "Electrical Characteristics"**, package and land pattern illustrations in **Section 29.0 "Packaging Information"** and the format of all register tables.

APPENDIX B: DEVICE DIFFERENCES

The differences between the devices listed in this data sheet are shown in Table B-1.

TABLE B-1: DEVICE DIFFERENCES (PIC18F6527/6622/6627/6722)

Features	PIC18F6527	PIC18F6622	PIC18F6627	PIC18F6722
Program Memory (Bytes)	48K	64K	96K	128K
Program Memory (Instructions)	24576	32768	49152	65536
Interrupt Sources	28	28	28	28
I/O Ports	Ports A, B, C, D, E, F, G	Ports A, B, C, D, E, F, G	Ports A, B, C, D, E, F, G	Ports A, B, C, D, E, F, G
Capture/Compare/PWM Modules	2	2	2	2
Enhanced Capture/Compare/PWM Modules	3	3	3	3
Parallel Communications (PSP)	Yes	Yes	Yes	Yes
External Memory Bus	No	No	No	No
10-bit Analog-to-Digital Module	12 input channels	12 input channels	12 input channels	12 input channels
Packages	64-pin TQFP	64-pin TQFP	64-pin TQFP	64-pin TQFP

TABLE B-2: DEVICE DIFFERENCES (PIC18F8527/8622/8627/8722)

Features	PIC18F8527	PIC18F8622	PIC18F8627	PIC18F8722
Program Memory (Bytes)	48K	64K	96K	128K
Program Memory (Instructions)	24576	32768	49152	65536
Interrupt Sources	29	29	29	29
I/O Ports	Ports A, B, C, D, E, F, G, H, J	Ports A, B, C, D, E, F, G, H, J	Ports A, B, C, D, E, F, G, H, J	Ports A, B, C, D, E, F, G, H, J
Capture/Compare/PWM Modules	2	2	2	2
Enhanced Capture/Compare/PWM Modules	3	3	3	3
Parallel Communications (PSP)	Yes	Yes	Yes	Yes
External Memory Bus	Yes	Yes	Yes	Yes
10-bit Analog-to-Digital Module	16 input channels	16 input channels	16 input channels	16 input channels
Packages	80-pin TQFP	80-pin TQFP	80-pin TQFP	80-pin TQFP

© 2008 Microchip Technology Inc.

APPENDIX C: CONVERSION CONSIDERATIONS

This appendix discusses the considerations for converting from previous versions of a device to the ones listed in this data sheet. Typically, these changes are due to the differences in the process technology used. An example of this type of conversion is from a PIC16C74A to a PIC16C74B.

Not Applicable

APPENDIX D: MIGRATION FROM BASELINE TO ENHANCED DEVICES

This section discusses how to migrate from a Baseline device (i.e., PIC16C5X) to an Enhanced MCU device (i.e., PIC18FXXX).

The following are the list of modifications over the PIC16C5X microcontroller family:

Not Currently Available

© 2008 Microchip Technology Inc.

APPENDIX E: MIGRATION FROM MID-RANGE TO ENHANCED DEVICES

A detailed discussion of the differences between the mid-range MCU devices (i.e., PIC16CXXX) and the enhanced devices (i.e., PIC18FXXX) is provided in *AN716, "Migrating Designs from PIC16C74A/74B to PIC18C442*". The changes discussed, while device specific, are generally applicable to all mid-range to enhanced device migrations.

This Application Note is available on our web site, www.microchip.com, as Literature Number DS00716.

APPENDIX F: MIGRATION FROM HIGH-END TO ENHANCED DEVICES

A detailed discussion of the migration pathway and differences between the high-end MCU devices (i.e., PIC17CXXX) and the enhanced devices (i.e., PIC18FXXX) is provided in *AN726, "PIC17CXXX to PIC18CXXX Migration*".

This Application Note is available on our web site, www.microchip.com, as Literature Number DS00726.

NOTES:

© 2008 Microchip Technology Inc.

INDEX

A

A/D 271
  A/D Converter Interrupt, Configuring 275
  Acquisition Requirements 276
  ADCON0 Register 271
  ADCON1 Register 271
  ADCON2 Register 271
  ADRESH Register 271, 274
  ADRESL Register 271
  Analog Port Pins 158
  Analog Port Pins, Configuring 278
  Associated Registers 280
  Configuring the Module 275
  Conversion Clock (TAD) 277
  Conversion Status (GO/DONE Bit) 274
  Conversions 279
  Converter Characteristics 416
  Discharge 279
  Operation in Power-Managed Modes 278
  Selecting and Configuring Acquisition Time 277
  Special Event Trigger (ECCP) 192
  Special Event Trigger (ECCP2) 280
  Use of the ECCP2 Trigger 280
Absolute Maximum Ratings 375
AC (Timing) Characteristics 396
  Load Conditions for Device
    Timing Specifications 397
  Parameter Symbology 396
  Temperature and Voltage Specifications 397
  Timing Conditions 397
Access Bank
  Mapping in Indexed Literal Offset Mode 85
ACKSTAT 236
ACKSTAT Status Flag 236
ADCON0 Register 271
  GO/DONE Bit 274
ADCON1 Register 271
ADCON2 Register 271
ADDFSR 364
ADDLW 327
ADDULNK 364
ADDWF 327
ADDWFC 328
ADRESH Register 271
ADRESL Register 271, 274
Analog-to-Digital Converter. *See* A/D.
ANDLW 328
ANDWF 329
Assembler
  MPASM Assembler 372
Auto-Wake-up on Sync Break Character 262

B

Bank Select Register (BSR) 72
Baud Rate Generator 232
BC 329
BCF 330
BF 236
BF Status Flag 236
Block Diagrams
  16-Bit Byte Select Mode 103
  16-Bit Byte Write Mode 101
  16-Bit Word Write Mode 102
  A/D 274
  Analog Input Model 275
  Baud Rate Generator 232
  Capture Mode Operation 181
  Comparator Analog Input Model 285
  Comparator I/O Operating Modes 282
  Comparator Output 284
  Comparator Voltage Reference 288
  Comparator Voltage Reference Output
    Buffer Example 289
  Compare Mode Operation 182
  Device Clock 37
  Enhanced PWM 193
  EUSART Receive 260
  EUSART Transmit 258
  External Power-on Reset Circuit
    (Slow VDD Power-up) 51
  Fail-Safe Clock Monitor (FSCM) 315
  Generic I/O Port Operation 135
  High/Low-Voltage Detect with External Input 292
  HSPLL 33
  Interrupt Logic 120
  INTOSC and PLL 34
  MSSP (I^2C Master Mode) 230
  MSSP (I^2C Mode) 215
  MSSP (SPI Mode) 205
  On-Chip Reset Circuit 49
  PIC18F6527/6622/6627/6722 11
  PIC18F8527/8622/8627/8722 12
  PORTD and PORTE (Parallel Slave Port) 158
  PWM Operation (Simplified) 184
  Reads from Flash Program Memory 91
  Single Comparator 283
  Table Read Operation 87
  Table Write Operation 88
  Table Writes to Flash Program Memory 93
  Timer0 in 16-Bit Mode 162
  Timer0 in 8-Bit Mode 162
  Timer1 166
  Timer1 (16-Bit Read/Write Mode) 166
  Timer2 172
  Timer3 174
  Timer3 (16-Bit Read/Write Mode) 174
  Timer4 178
  Watchdog Timer 312
BN 330
BNC 331
BNN 331
BNOV 332
BNZ 332
BOR. *See* Brown-out Reset.
BOV 335
BRA 333
Break Character (12-Bit) Transmit and Receive 263
BRG. *See* Baud Rate Generator.
Brown-out Reset (BOR) 52
  Detecting 52
  Disabling in Sleep Mode 52
  Software Enabled 52
BSF 333
BTFSC 334
BTFSS 334
BTG 335
BZ 336

C

C Compilers
- MPLAB C18 ... 372
- MPLAB C30 ... 372

CALL ... 336
CALLW ... 365
Capture (CCP Module) ... 181
- Associated Registers ... 183
- CCPRxH:CCPRxL Registers ... 181
- CCPx Pin Configuration ... 181
- Prescaler ... 181
- Software Interrupt ... 181
- Timer1/Timer3 Mode Selection ... 181

Capture (ECCP Module) ... 192
Capture/Compare/PWM (CCP) ... 179
- Capture Mode. *See* Capture.
- CCP Mode and Timer Resources ... 180
- CCPRxH Register ... 180
- CCPRxL Register ... 180
- Compare Mode. *See* Compare.
- Interconnect Configurations ... 180
- Module Configuration ... 180

Clock Sources ... 37
- Selecting the 31 kHz Source ... 38
- Selection Using OSCCON Register ... 38

CLRF ... 337
CLRWDT ... 337
Code Examples
- 16 x 16 Signed Multiply Routine ... 118
- 16 x 16 Unsigned Multiply Routine ... 118
- 8 x 8 Signed Multiply Routine ... 117
- 8 x 8 Unsigned Multiply Routine ... 117
- Changing Between Capture Prescalers ... 181
- Computed GOTO Using an Offset Value ... 68
- Data EEPROM Read ... 113
- Data EEPROM Refresh Routine ... 114
- Data EEPROM Write ... 113
- Erasing a Flash Program Memory Row ... 92
- Fast Register Stack ... 68
- How to Clear RAM (Bank 1) Using Indirect Addressing ... 81
- Implementing a Real-Time Clock Using a Timer1 Interrupt Service ... 169
- Initializing PORTA ... 135
- Initializing PORTB ... 137
- Initializing PORTC ... 140
- Initializing PORTD ... 143
- Initializing PORTE ... 146
- Initializing PORTF ... 149
- Initializing PORTG ... 151
- Initializing PORTH ... 154
- Initializing PORTJ ... 156
- Loading the SSP1BUF (SSP1SR) Register ... 208
- Reading a Flash Program Memory Word ... 91
- Saving STATUS, WREG and BSR Registers in RAM ... 134
- Writing to Flash Program Memory ... 94–95

Code Protection ... 297
COMF ... 338
Comparator ... 281
- Analog Input Connection Considerations ... 285
- Associated Registers ... 285
- Configuration ... 282
- Effects of a Reset ... 284
- Interrupts ... 284
- Operation ... 283
- Operation During Sleep ... 284
- Outputs ... 283
- Reference ... 283
  - External Signal ... 283
  - Internal Signal ... 283
- Response Time ... 283

Comparator Specifications ... 394
Comparator Voltage Reference ... 287
- Accuracy and Error ... 288
- Associated Registers ... 289
- Configuring ... 287
- Connection Considerations ... 288
- Effects of a Reset ... 288
- Operation During Sleep ... 288

Comparator Voltage Reference Specifications ... 394
Compare (CCP Module) ... 182
- Associated Registers ... 183
- CCPRx Registers ... 182
- Pin Configuration ... 182
- Software Interrupt ... 182
- Special Event Trigger ... 182
- Timer1/Timer3 Mode Selection ... 182

Compare (CCP Modules)
- Special Event Trigger ... 175

Compare (ECCP Module) ... 192
- Special Event Trigger ... 192

Compare (ECCP2 Module)
- Special Event Trigger ... 280

Computed GOTO ... 68
Configuration Bits ... 297
Configuration Register Protection ... 320
Context Saving During Interrupts ... 134
Conversion Considerations ... 426
CPFSEQ ... 338
CPFSGT ... 339
CPFSLT ... 339
Crystal Oscillator/Ceramic Resonator ... 31
Customer Change Notification Service ... 439
Customer Notification Service ... 439
Customer Support ... 439

D

Data Addressing Modes ... 81
- Comparing Addressing Modes with the Extended Instruction Set Enabled ... 84
- Direct ... 81
- Indexed Literal Offset ... 83
  - Instructions Affected ... 83
- Indirect ... 81
- Inherent and Literal ... 81

Data EEPROM
- Code Protection ... 320

Data EEPROM Memory ... 111
- Associated Registers ... 115
- EEADR and EEADRH Registers ... 111
- EECON1 and EECON2 Registers ... 111
- Operation During Code-Protect ... 114
- Protection Against Spurious Write ... 114
- Reading ... 113
- Using ... 114
- Write Verify ... 113
- Writing ... 113

© 2008 Microchip Technology Inc.

Data Memory 72
Access Bank 74
and the Extended Instruction Set 83
Bank Select Register (BSR) 72
General Purpose Registers 74
Map for PIC18F8722 Family 73
Special Function Registers 75
DAW 340
DC Characteristics 391
Power-Down and Supply Current 379
Supply Voltage 378
DCFSNZ 341
DECF 340
DECFSZ 341
Development Support 371
Device Differences 425
Device Overview 7
Details on Individual Family Members 9
Features (table) 9, 10
New Core Features 7
Device Reset Timers 53
Oscillator Start-up Timer (OST) 53
PLL Lock Time-out 53
Power-up Timer (PWRT) 53
Time-out Sequence 53
Direct Addressing 82

E

ECCP
Capture and Compare Modes 192
Standard PWM Mode 192
Effect on Standard PIC MCU Instructions 368
Effects of Power-Managed Modes on Various
Clock Sources 40
Electrical Characteristics 375
Enhanced Capture/Compare/PWM (ECCP) 187
and Program Memory Modes 188
Capture Mode. *See* Capture (ECCP Module).
Outputs and Configuration 188
Pin Configurations for ECCP1 189
Pin Configurations for ECCP2 190
Pin Configurations for ECCP3 191
PWM Mode. *See* PWM (ECCP Module).
Timer Resources 192
Enhanced PWM Mode. *See* PWM (ECCP Module).
Enhanced Universal Synchronous Asynchronous
Receiver Transmitter (EUSART). *See* EUSART.
Equations
A/D Acquisition Time 276
A/D Minimum Charging Time 276
A/D, Calculating the Minimum Required
Acquisition Time 276
Errata 5
EUSART
Asynchronous Mode 257
12-Bit Break Transmit and Receive 263
Associated Registers, Receive 261
Associated Registers, Transmit 259
Auto-Wake-up on Sync Break 262
Receiver 260
Setting up 9-Bit Mode with
Address Detect 260
Transmitter 257
Baud Rate Generator
Operation in Power-Managed Modes 251
Baud Rate Generator (BRG) 251
Associated Registers 252
Auto-Baud Rate Detect 255
Baud Rate Error, Calculating 252
Baud Rates, Asynchronous Modes 253
High Baud Rate Select (BRGH Bit) 251
Sampling 251
Synchronous Master Mode 264
Associated Registers, Receive 267
Associated Registers, Transmit 265
Reception 266
Transmission 264
Synchronous Slave Mode 268
Associated Registers, Receive 269
Associated Registers, Transmit 268
Reception 269
Transmission 268
Extended Instruction Set
ADDFSR 364
ADDULNK 364
CALLW 365
MOVSF 365
MOVSS 366
PUSHL 366
SUBFSR 367
SUBULNK 367
Extended Microcontroller Mode 100
External Clock Input 32
External Memory Bus 97
16-Bit Byte Select Mode 103
16-Bit Byte Write Mode 101
16-Bit Data Width Modes 100
16-Bit Mode Timing 104
16-Bit Word Write Mode 102
8-Bit Data Width Modes 106
8-Bit Mode Timing 107
I/O Port Functions 97
Operation in Power-Managed Modes 109

F

Fail-Safe Clock Monitor 297, 315
Exiting Operation 315
Interrupts in Power-Managed Modes 316
POR or Wake from Sleep 316
WDT During Oscillator Failure 315
Fast Register Stack 68
Firmware Instructions 321
Flash Program Memory 87
Associated Registers 95
Control Registers 88
EECON1 and EECON2 88
TABLAT (Table Latch) Register 90
TBLPTR (Table Pointer) Register 90
Erase Sequence 92
Erasing 92
Operation During Code-Protect 95
Reading 91
Table Pointer
Boundaries Based on Operation 90
Table Pointer Boundaries 90
Table Reads and Table Writes 87
Write Sequence 93
Writing To 93
Protection Against Spurious Writes 95
Unexpected Termination 95
Write Verify 95
FSCM. *See* Fail-Safe Clock Monitor.

G

General Call Address Support 229
GOTO 342

H

Hardware Multiplier 117
Introduction 117
Operation 117
Performance Comparison 117
High/Low-Voltage Detect 291
Applications 294
Associated Registers 295
Characteristics 395
Current Consumption 293
Effects of a Reset 295
Operation 292
During Sleep 295
Setup 293
Start-up Time 293
Typical Application 294
HLVD. *See* High/Low-Voltage Detect. 291

I

I/O Ports 135
I^2C Mode (MSSP)
Acknowledge Sequence Timing 239
Associated Registers 245
Baud Rate Generator 232
Bus Collision
During a Repeated Start Condition 243
During a Stop Condition 244
Clock Arbitration 233
Clock Stretching 225
10-Bit Slave Receive Mode (SEN = 1) 225
10-Bit Slave Transmit Mode 225
7-Bit Slave Receive Mode (SEN = 1) 225
7-Bit Slave Transmit Mode 225
Clock Synchronization and the CKP bit 226
Effects of a Reset 240
General Call Address Support 229
I^2C Clock Rate w/BRG 232
Master Mode 230
Operation 231
Reception 236
Repeated Start Condition Timing 235
Start Condition Timing 234
Transmission 236
Multi-Master Communication, Bus Collision
and Arbitration 240
Multi-Master Mode 240
Operation 219
Read/Write Bit Information (R/$\overline{W}$ Bit) 219, 220
Registers 215
Serial Clock (RC3/SCKx/SCLx) 220
Slave Mode 219
Addressing 219
Reception 220
Transmission 220
Sleep Operation 240
Stop Condition Timing 239
ID Locations 297, 320
INCF 342
INCFSZ 343
In-Circuit Debugger 320
In-Circuit Serial Programming (ICSP) 297, 320
Indexed Literal Offset Addressing
and Standard PIC18 Instructions 368
Indexed Literal Offset Mode 368
Indirect Addressing 82
INFSNZ 343
Initialization Conditions for all Registers 57–61
Instruction Cycle 69
Clocking Scheme 69
Instruction Flow/Pipelining 69
Instruction Set 321
ADDLW 327
ADDWF 327
ADDWF (Indexed Literal Offset Mode) 369
ADDWFC 328
ANDLW 328
ANDWF 329
BC 329
BCF 330
BN 330
BNC 331
BNN 331
BNOV 332
BNZ 332
BOV 335
BRA 333
BSF 333
BSF (Indexed Literal Offset Mode) 369
BTFSC 334
BTFSS 334
BTG 335
BZ 336
CALL 336
CLRF 337
CLRWDT 337
COMF 338
CPFSEQ 338
CPFSGT 339
CPFSLT 339
DAW 340
DCFSNZ 341
DECF 340
DECFSZ 341
Extended Instructions 363
Considerations when Enabling 368
Syntax 363
Use with MPLAB IDE Tools 370
General Format 323
GOTO 342
INCF 342
INCFSZ 343
INFSNZ 343
IORLW 344
IORWF 344
LFSR 345
MOVF 345
MOVFF 346
MOVLB 346
MOVLW 347
MOVWF 347
MULLW 348
MULWF 348
NEGF 349
NOP 349
POP 350
PUSH 350

© 2008 Microchip Technology Inc.

RCALL 351
RESET 351
RETFIE 352
RETLW 352
RETURN 353
RLCF 353
RLNCF 354
RRCF 354
RRNCF 355
SETF 355
SETF (Indexed Literal Offset Mode) 369
SLEEP 356
Standard Instructions 321
SUBFWB 356
SUBLW 357
SUBWF 357
SUBWFB 358
SWAPF 358
TBLRD 359
TBLWT 360
TSTFSZ 361
XORLW 361
XORWF 362
INTCON Register
RBIF Bit 137
INTCON Registers 121
Inter-Integrated Circuit. *See* I^{2}C.
Internal Oscillator Block 34
Adjustment 34
INTIO Modes 34
INTOSC Frequency Drift 35
INTOSC Output Frequency 34
OSCTUNE Register 34
PLL in INTOSC Modes 35
Internal RC Oscillator
Use with WDT 312
Internet Address 439
Interrupt Sources 297
A/D Conversion Complete 275
Capture Complete (CCP) 181
Compare Complete (CCP) 182
Interrupt-on-Change (RB7:RB4) 137
INTx Pin 134
PORTB, Interrupt-on-Change 134
TMR0 134
TMR0 Overflow 163
TMR1 Overflow 165
TMR2 to PR2 Match (PWM) 184, 192
TMR3 Overflow 173, 175
TMR4 to PR4 Match 178
TMR4 to PR4 Match (PWM) 177
Interrupts 119
Interrupts, Flag Bits
Interrupt-on-Change (RB7:RB4) Flag
(RBIF Bit) 137
INTOSC, INTRC. *See* Internal Oscillator Block.
IORLW 344
IORWF 344
IPR Registers 130

K

Key Features
Easy Migration 8
Expanded Memory 7
External Memory Interface 8

L

LFSR 345
Low-Voltage ICSP Programming. *See* Single-Supply ICSP Programming

M

Master Clear ($\overline{\text{MCLR}}$) 51
Master Synchronous Serial Port (MSSP). *See* MSSP.
Memory
Mode Memory Access 64
Memory Maps for PIC18F8722 Family
Program Memory Modes 65
Memory Organization 63
Data Memory 72
Program Memory 63
Modes 63
Memory Programming Requirements 393
Microchip Internet Web Site 439
Microcontroller Mode 100
Microprocessor Mode 100
Microprocessor with Boot Block Mode 100
Migration from Baseline to Enhanced Devices 426
Migration from High-End to Enhanced Devices 427
Migration from Mid-Range to Enhanced Devices 427
MOVF 345
MOVFF 346
MOVLB 346
MOVLW 347
MOVSF 365
MOVSS 366
MOVWF 347
MPLAB ASM30 Assembler, Linker, Librarian 372
MPLAB ICD 2 In-Circuit Debugger 373
MPLAB ICE 2000 High-Performance
Universal In-Circuit Emulator 373
MPLAB Integrated Development
Environment Software 371
MPLAB PM3 Device Programmer 373
MPLAB REAL ICE In-Circuit Emulator System 373
MPLINK Object Linker/MPLIB Object Librarian 372
MSSP
$\overline{\text{ACK}}$ Pulse 219, 220
Control Registers (general) 205
I^{2}C Mode. *See* I^{2}C Mode.
Module Overview 205
SPI Master/Slave Connection 209
TMR4 Output for Clock Shift 178
MULLW 348
MULWF 348

N

NEGF 349
NOP 349

O

Opcode Field Descriptions 322
Oscillator Configuration 31
EC 31
ECIO 31
HS 31
HSPLL 31
Internal Oscillator Block 34
INTIO1 31
INTIO2 31
LP 31

RC 31
RCIO 31
XT 31
Oscillator Selection 297
Oscillator Start-up Timer (OST) 40, 53
Oscillator Switching 37
Oscillator Transitions 38
Oscillator, Timer1 ..... 165, 175
Oscillator, Timer3 173

P

Packaging 419
Details 420
Marking 419
Parallel Slave Port (PSP) 158
Associated Registers 160
RE0/$\overline{\text{RD}}$ Pin 158
RE1/$\overline{\text{WR}}$ Pin 158
RE2/$\overline{\text{CS}}$ Pin 158
Select (PSPMODE Bit) 158
PICSTART Plus Development Programmer 374
PIE Registers 127
Pin Functions
AVDD 20
AVDD 30
AVSS 20
AVSS 30
OSC1/CLKI/RA7 ..... 13, 21
OSC2/CLKO/RA6 ..... 13, 21
RA0/AN0 ..... 14, 22
RA1/AN1 ..... 14, 22
RA2/AN2/VREF- 14, 22
RA3/AN3/VREF+ 14, 22
RA4/T0CKI 14, 22
RA5/AN4/HLVDIN 14, 22
RB0/INT0/FLT0 ..... 15, 23
RB1/INT1 ..... 15, 23
RB2/INT2 ..... 15, 23
RB3/INT3 15
RB3/INT3/ECCP2/P2A 23
RB4/KBI0 ..... 15, 23
RB5/KBI1/PGM 15, 23
RB6/KBI2/PGC 15, 23
RB7/KBI3/PGD 15, 23
RC0/T1OSO/T13CKI 16, 24
RC1/T1OSI/ECCP2/P2A 16, 24
RC2/ECCP1/P1A 16, 24
RC3/SCK1/SCL1 ..... 16, 24
RC4/SDI1/SDA1 ..... 16, 24
RC5/SDO1 ..... 16, 24
RC6/TX1/CK1 ..... 16, 24
RC7/RX1/DT1 ..... 16, 24
RD0/AD0/PSP0 25
RD0/PSP0 17
RD1/AD1/PSP1 25
RD1/PSP1 17
RD2/AD2/PSP2 25
RD2/PSP2 17
RD3/AD3/PSP3 25
RD3/PSP3 17
RD4/AD4/PSP4/SDO2 25
RD4/PSP4/SDO2 17
RD5/AD5/PSP5/SDI2/SDA2 25
RD5/PSP5/SDI2/SDA2 17
RD6/AD6/PSP6/SCK2/SCL2 25
RD6/PSP6/SCK2/SCL2 17
RD7/AD7/PSP7/$\overline{\text{SS2}}$ 25
RD7/PSP7/$\overline{\text{SS2}}$ 17
RE0/AD8/$\overline{\text{RD}}$/P2D 26
RE0/$\overline{\text{RD}}$/P2D 18
RE1/AD9/$\overline{\text{WR}}$/P2C 26
RE1/$\overline{\text{WR}}$/P2C 18
RE2/AD10/$\overline{\text{CS}}$/P2B 26
RE2/$\overline{\text{CS}}$/P2D 18
RE3/AD11/P3C 26
RE3/P3C 18
RE4/AD12/P3B 26
RE4/P3B 18
RE5/AD13/P1C 26
RE5/P1C 18
RE6/AD14/P1B 26
RE6/P1B 18
RE7/AD15/ECCP2/P2A 26
RE7/ECCP2/P2A 18
RF0/AN5 ..... 19, 27
RF1/AN6/C2OUT 19, 27
RF2/AN7/C1OUT 19, 27
RF3/AN8 ..... 19, 27
RF4/AN9 ..... 19, 27
RF5/AN10/CVREF 19, 27
RF6/AN11 ..... 19, 27
RF7/$\overline{\text{SS1}}$ 19, 27
RG0/ECCP3/P3A 20, 28
RG1/TX2/CK2 ..... 20, 28
RG2/RX2/DT2 ..... 20, 28
RG3/CCP4/P3D 20, 28
RG4/CCP5/P1D 20, 28
RG5 ..... 20, 28
RG5/$\overline{\text{MCLR}}$/VPP 13, 21
RH0/A16 29
RH1/A17 29
RH2/A18 29
RH3/A19 29
RH4/AN12/P3C 29
RH5/AN13/P3B 29
RH6/AN14/P1C 29
RH7/AN15/P1B 29
RJ0/$\overline{\text{ALE}}$ 30
RJ1/$\overline{\text{OE}}$ 30
RJ2/$\overline{\text{WRL}}$ 30
RJ3/$\overline{\text{WRH}}$ 30
RJ4/BA0 30
RJ5/$\overline{\text{CE}}$ 30
RJ6/$\overline{\text{LB}}$ 30
RJ7/$\overline{\text{UB}}$ 30
VDD 20
VDD 30
VSS 20
VSS 30
Pinout I/O Descriptions
PIC18F6527/6622/6627/6722 13
PIC18F8527/8622/8627/8722 21
PIR Registers 124
PLL Frequency Multiplier 33
HSPLL Oscillator Mode 33
Use with INTOSC 33
POP 350
POR. *See* Power-on Reset.

© 2008 Microchip Technology Inc.

PORTA
Associated Registers 136
Functions 136
LATA Register 135
PORTA Register 135
TRISA Register 135
PORTB
Associated Registers 139
Functions 138
LATB Register 137
PORTB Register 137
RB7:RB4 Interrupt-on-Change Flag
(RBIF Bit) 137
TRISB Register 137
PORTC
Associated Registers 142
Functions 141
LATC Register 140
PORTC Register 140
RC3/SCKx/SCLx Pin 220
TRISC Register 140
PORTD 158
Associated Registers 145
Functions 144
LATD Register 143
PORTD Register 143
TRISD Register 143
PORTE
Analog Port Pins 158
Associated Registers 148
Functions 147
LATE Register 146
PORTE Register 146
PSP Mode Select (PSPMODE Bit) 158
RE0/$\overline{\text{RD}}$ Pin 158
RE1/$\overline{\text{WR}}$ Pin 158
RE2/$\overline{\text{CS}}$ Pin 158
TRISE Register 146
PORTF
Associated Registers 150
Functions 150
LATF Register 149
PORTF Register 149
TRISF Register 149
PORTG
Associated Registers 153
Functions 152
LATG Register 151
PORTG Register 151
TRISG Register 151
PORTH
Associated Registers 155
Functions 155
LATH Register 154
PORTH Register 154
TRISH Register 154
PORTJ
Associated Registers 157
Functions 157
LATJ Register 156
PORTJ Register 156
TRISJ Register 156
Power-Managed Modes 41
and A/D Operation 278
and EUSART Operation 251
and Multiple Sleep Commands 42
and PWM Operation 203
and SPI Operation 213
Associated Registers 109
Clock Transitions and Status Indicators 42
Effects on Clock Sources 40
Entering 41
Exiting Idle and Sleep Modes 47
by Interrupt 47
by Reset 47
by WDT Time-out 47
Without a Start-up Delay 48
Idle Modes 45
PRI_IDLE 46
RC_IDLE 47
SEC_IDLE 46
Run Modes 42
PRI_RUN 42
RC_RUN 43
SEC_RUN 42
Selecting 41
Sleep Mode 45
Summary (table) 41
Power-on Reset (POR) 51
Power-up Timer (PWRT) 53
Time-out Sequence 53
Power-up Delays 40
Power-up Timer (PWRT) 40
Prescaler
Timer2 193
Prescaler, Timer0 163
Prescaler, Timer2 185
PRI_IDLE Mode 46
PRI_RUN Mode 42
Program Counter 66
PCL, PCH and PCU Registers 66
PCLATH and PCLATU Registers 66
Program Memory
and Extended Instruction Set 85
Code Protection 318
Extended Microcontroller Mode 63
Instructions 70
Two-Word 71
Interrupt Vector 63
Look-up Tables 68
Map and Stack (diagram) 64
Microcontroller Mode 63
Microprocessor Mode 63
Microprocessor with Boot Block Mode 63
Reset Vector 63
Program Verification and Code Protection 317
Associated Registers 318
Programming, Device Instructions 321
PSP.*See* Parallel Slave Port.
Pulse-Width Modulation. *See* PWM (CCP Module)
and PWM (ECCP Module).
PUSH 350
PUSH and POP Instructions 67
PUSHL 366

PWM (CCP Module)
Associated Registers 186
Duty Cycle 184
Example Frequencies/Resolutions 185
Period 184
Setup for PWM Operation 185
TMR2 to PR2 Match 184
TMR4 to PR4 Match 177
PWM (ECCP Module) 192
Associated Registers 204
CCPR1H:CCPR1L Registers 192
Direction Change in Full-Bridge Output Mode 198
Duty Cycle 193
Effects of a Reset 203
Enhanced PWM Auto-Shutdown 200
Example Frequencies/Resolutions 193
Full-Bridge Application Example 198
Full-Bridge Mode 197
Half-Bridge Mode 196
Half-Bridge Output Mode
Applications Example 196
Operation in Power-Managed Modes 203
Operation with Fail-Safe Clock Monitor 203
Output Configurations 194
Output Relationships (Active-High) 194
Output Relationships (Active-Low) 195
Period 192
Programmable Dead-Band Delay 200
Setup for PWM Operation 203
Start-up Considerations 202
TMR2 to PR2 Match 192

Q

Q Clock 185, 193

R

RAM. *See* Data Memory.
RC Oscillator 33
RCIO Oscillator Mode 33
RC_IDLE Mode 47
RC_RUN Mode 43
RCALL 351
RCON Register
Bit Status During Initialization 56
Reader Response 440
Register File 74
Registers
ADCON0 (A/D Control 0) 271
ADCON1 (A/D Control 1) 272
ADCON2 (A/D Control 2) 273
BAUDCONx (Baud Rate Control) 250
CCPxCON (CCPx Control, CCP4 and CCP5) 179
CMCON (Comparator Control) 281
CONFIG1H (Configuration 1 High) 299
CONFIG2H (Configuration 2 High) 301
CONFIG2L (Configuration 2 Low) 300
CONFIG3H (Configuration 3 High) 303
CONFIG3L (Configuration 3 Low) 302
CONFIG4L (Configuration 4 Low) 304
CONFIG5H (Configuration 5 High) 306
CONFIG5L (Configuration 5 Low) 305
CONFIG6H (Configuration 6 High) 308
CONFIG6L (Configuration 6 Low) 307
CONFIG7H (Configuration 7 High) 310
CONFIG7L (Configuration 7 Low) 309
DEVID1 (Device ID 1) 311
DEVID2 (Device ID 2) 311
ECCPxDEL (Enhanced PWM
Dead-Band Delay) 200
EECON1 (Data EEPROM Control 1) 112
EECON1 (EEPROM Control 1) 89
HLVDCON (High/Low-Voltage Detect Control) 291
INTCON (Interrupt Control) 121
INTCON2 (Interrupt Control 2) 122
INTCON3 (Interrupt Control 3) 123
IPR1 (Peripheral Interrupt Priority 1) 130
IPR2 (Peripheral Interrupt Priority 2) 131
MEMCON (External Memory Bus Control) 98
OSCCON (Oscillator Control) 39
OSCTUNE (Oscillator Tuning) 35
PIR1 (Peripheral Interrupt Request (Flag) 1) 124
PIR2 (Peripheral Interrupt Request (Flag) 2) 125
PSPCON (Parallel Slave Port Control) 159
RCON (Reset Control) 50, 133
RCSTAx (Receive Status and Control) 249
SSPxCON1 (MSSPx Control 1, I^2C Mode) 217
SSPxCON1 (MSSPx Control 1, SPI Mode) 207
SSPxCON2 (MSSPx Control 2, I^2C Mode) 219
SSPxSTAT (MSSPx Status, I^2C Mode) 216
SSPxSTAT (MSSPx Status, SPI Mode) 206
STATUS (Arithmetic Status) 80
STKPTR (Stack Pointer) 67
T0CON (Timer0 Control) 161
T1CON (Timer1 Control) 165
T2CON (Timer2 Control) 171
T3CON (Timer3 Control) 173
T4CON (Timer 4 Control) 177
TXSTAx (Transmit Status and Control) 248
WDTCON (Watchdog Timer Control) 313
RESET 351
Reset State of Registers 56
Resets 49, 297
Brown-out Reset (BOR) 297
Oscillator Start-up Timer (OST) 297
Power-on Reset (POR) 297
Power-up Timer (PWRT) 297
RETFIE 352
RETLW 352
RETURN 353
Return Address Stack 66
Return Stack Pointer (STKPTR) 67
Revision History 425
RLCF 353
RLNCF 354
RRCF 354
RRNCF 355

S

SCKx 205
SDIx 205
SDOx 205
SEC_IDLE Mode 46
SEC_RUN Mode 42
Serial Clock, SCKx 205
Serial Data In (SDIx) 205
Serial Data Out (SDOx) 205
Serial Peripheral Interface. *See* SPI Mode.
SETF 355
Single-Supply ICSP Programming.
Slave Select ($\overline{SS}$x) 205
Slave Select Synchronization 211
SLEEP 356

© 2008 Microchip Technology Inc.

Sleep
OSC1 and OSC2 Pin States 40
Sleep Mode 45
Software Simulator (MPLAB SIM) 372
Special Event Trigger. *See* Compare (CCP Mode).
Special Event Trigger. *See* Compare (ECCP Module).
Special Features of the CPU 297
Special Function Registers 75
Map 75
SPI Mode (MSSP) 205
Associated Registers 214
Bus Mode Compatibility 213
Clock Speed, Interactions 213
Effects of a Reset 213
Enabling SPI I/O 209
Master Mode 210
Master/Slave Connection 209
Operation 208
Operation in Power-Managed Modes 213
Serial Clock 205
Serial Data In 205
Serial Data Out 205
Slave Mode 211
Slave Select 205
Slave Select Synchronization 211
SPI Clock 210
SSPxBUF Register 210
SSPxSR Register 210
Typical Connection 209
SSPOV 236
SSPOV Status Flag 236
SSPxSTAT Register
R/$\overline{W}$ Bit 219, 220
$\overline{SS}$x 205
Stack Full/Underflow Resets 68
SUBFSR 367
SUBFWB 356
SUBLW 357
SUBULNK 367
SUBWF 357
SUBWFB 358
SWAPF 358

T

Table Pointer Operations (table) 90
Table Reads/Table Writes 69
TBLRD 359
TBLWT 360
Time-out in Various Situations (table) 53
Timer0 161
Associated Registers 163
Operation 162
Overflow Interrupt 163
Prescaler 163
Prescaler Assignment (PSA Bit) 163
Prescaler Select (T0PS2:T0PS0 Bits) 163
Prescaler. *See* Prescaler, Timer0.
Reads and Writes in 16-Bit Mode 162
Source Edge Select (T0SE Bit) 162
Source Select (T0CS Bit) 162
Switching Prescaler Assignment 163
Timer1 165
16-Bit Read/Write Mode 167
Associated Registers 169
Interrupt 168
Operation 166
Oscillator 165, 167
Layout Considerations 168
Overflow Interrupt 165
Resetting, Using the CCP
Special Event Trigger 168
Special Event Trigger (ECCP) 192
TMR1H Register 165
TMR1L Register 165
Use as a Real-Time Clock 168
Timer2 171
Associated Registers 172
Interrupt 172
Operation 171
Output 172
PR2 Register 184, 192
TMR2 to PR2 Match Interrupt 184, 192
Timer3 173
16-Bit Read/Write Mode 175
Associated Registers 175
Operation 174
Oscillator 173, 175
Overflow Interrupt 173, 175
Special Event Trigger (CCP) 175
TMR3H Register 173
TMR3L Register 173
Timer4 177
Associated Registers 178
MSSP Clock Shift 178
Operation 177
Postscaler. *See* Postscaler, Timer4.
PR4 Register 177
Prescaler. *See* Prescaler, Timer4.
TMR4 Register 177
TMR4 to PR4 Match Interrupt 177, 178
Timing Diagrams
A/D Conversion 416
Asynchronous Reception 261
Asynchronous Transmission 258
Asynchronous Transmission (Back to Back) 258
Automatic Baud Rate Calculation 256
Auto-Wake-up Bit (WUE) During
Normal Operation 262
Auto-Wake-up Bit (WUE) During Sleep 262
Baud Rate Generator with Clock Arbitration 233
BRG Overflow Sequence 256
BRG Reset Due to SDAx Arbitration
During Start Condition 242
Brown-out Reset (BOR) 403
Bus Collision During a Repeated Start
Condition (Case 1) 243
Bus Collision During a Repeated Start
Condition (Case 2) 243
Bus Collision During a Start
Condition (SCLx = 0) 242
Bus Collision During a Stop
Condition (Case 1) 244
Bus Collision During a Stop
Condition (Case 2) 244

Bus Collision During Start Condition (SDAx Only) 241
Bus Collision for Transmit and Acknowledge 240
Capture/Compare/PWM (All ECCP/CCP Modules) 405
CLKO and I/O 400
Clock Synchronization 226
Clock/Instruction Cycle 69
EUSART Synchronous Receive (Master/Slave) 415
EUSART Synchronous Transmission (Master/Slave) 415
Example SPI Master Mode (CKE = 0) 407
Example SPI Master Mode (CKE = 1) 408
Example SPI Slave Mode (CKE = 0) 409
Example SPI Slave Mode (CKE = 1) 410
External Clock (All Modes Except PLL) 398
External Memory Bus for Sleep (Microprocessor Mode) 105, 108
External Memory Bus for TBLRD (Extended Microcontroller Mode) 104, 107
External Memory Bus for TBLRD (Microprocessor Mode) 107
External Memory Bus for TBLRD with 1 TCY Wait State (Microprocessor Mode) 104
Fail-Safe Clock Monitor (FSCM) 316
First Start Bit Timing 234
Full-Bridge PWM Output 197
Half-Bridge PWM Output 196
High/Low-Voltage Detect Characteristics 395
High-Voltage Detect Operation (VDIRMAG = 1) 294
I2C Acknowledge Sequence 239
I2C Bus Data 411
I2C Bus Start/Stop Bits 411
I2C Master Mode (7 or 10-Bit Transmission) 237
I2C Master Mode (7-Bit Reception) 238
I2C Slave Mode (10-Bit Reception, SEN = 0) 223
I2C Slave Mode (10-Bit Reception, SEN = 1) 228
I2C Slave Mode (10-Bit Transmission) 224
I2C Slave Mode (7-bit Reception, SEN = 0) 221
I2C Slave Mode (7-Bit Reception, SEN = 1) 227
I2C Slave Mode (7-Bit Transmission) 222
I2C Slave Mode General Call Address Sequence (7 or 10-Bit Address Mode) 229
I2C Stop Condition Receive or Transmit Mode 239
Low-Voltage Detect Operation (VDIRMAG = 0) 293
Master SSP I2C Bus Data 413
Master SSP I2C Bus Start/Stop Bits 413
Parallel Slave Port (PIC18F8527/8622/8627/8722) 406
Parallel Slave Port (PSP) Read 160
Parallel Slave Port (PSP) Write 160
Program Memory Read 401
Program Memory Write 402
PWM Auto-Shutdown (P1RSEN = 0, Auto-Restart Disabled) 202
PWM Auto-Shutdown (P1RSEN = 1, Auto-Restart Enabled) 202
PWM Direction Change 199
PWM Direction Change at Near 100% Duty Cycle 199
PWM Output 184
Repeated Start Condition 235
Reset, Watchdog Timer (WDT), Oscillator Start-up Timer (OST) and Power-up Timer (PWRT) 403
Send Break Character Sequence 263
Slave Synchronization 211
Slow Rise Time (MCLR Tied to VDD, VDD Rise > TPWRT) 55
SPI Mode (Master Mode) 210
SPI Mode (Slave Mode, CKE = 0) 212
SPI Mode (Slave Mode, CKE = 1) 212
Synchronous Reception (Master Mode, SREN) 266
Synchronous Transmission 264
Synchronous Transmission (Through TXEN) 265
Time-out Sequence on POR w/PLL Enabled (MCLR Tied to VDD) 55
Time-out Sequence on Power-up (MCLR Not Tied to VDD, Case 1) 54
Time-out Sequence on Power-up (MCLR Not Tied to VDD, Case 2) 54
Time-out Sequence on Power-up (MCLR Tied to VDD, VDD Rise < TPWRT) 54
Timer0 and Timer1 External Clock 404
Transition for Entry to Idle Mode 46
Transition for Entry to SEC_RUN Mode 43
Transition for Entry to Sleep Mode 45
Transition for Two-Speed Start-up (INTOSC to HSPLL) 314
Transition for Wake from Idle to Run Mode 46
Transition for Wake from Sleep (HSPLL) 45
Transition from RC_RUN Mode to PRI_RUN Mode 44
Transition from SEC_RUN Mode to PRI_RUN Mode (HSPLL) 43
Transition to RC_RUN Mode 44
Typical Opcode Fetch, 8-Bit Mode 108
Timing Diagrams and Specifications
A/D Conversion Requirements 417
AC Characteristics Internal RC Accuracy 399
Capture/Compare/PWM Requirements (All ECCP/CCP Modules) 405
CLKO and I/O Requirements 400, 401
EUSART Synchronous Receive Requirements 415
EUSART Synchronous Transmission Requirements 415
Example SPI Mode Requirements (Master Mode, CKE = 0) 407
Example SPI Mode Requirements (Master Mode, CKE = 1) 408
Example SPI Mode Requirements (Slave Mode, CKE = 0) 409
Example SPI Slave Mode Requirements (CKE = 1) 410
External Clock Requirements 398
I2C Bus Data Requirements (Slave Mode) 412
I2C Bus Start/Stop Bits Requirements (Slave Mode) 411
Master SSP I2C Bus Data Requirements 414
Master SSP I2C Bus Start/Stop Bits Requirements 413
Parallel Slave Port Requirements (PIC18F8527/8622/8627/8722) 406
PLL Clock 399
Program Memory Write Requirements 402

© 2008 Microchip Technology Inc.

Reset, Watchdog Timer, Oscillator Start-up Timer, Power-up Timer and Brown-out Reset Requirements 403
Timer0 and Timer1 External Clock Requirements 404
Top-of-Stack Access 66
TRISE Register
PSPMODE Bit 158
TSTFSZ 361
Two-Speed Start-up 297, 314
IESO (CONFIG1H, Internal/External Oscillator Switchover Bit 299
Two-Word Instructions
Example Cases 71
TXSTAx Register
BRGH Bit 251

W

Watchdog Timer (WDT) 297, 312
Associated Registers 313
Control Register 312
During Oscillator Failure 315
Programming Considerations 312
WCOL 234, 235, 236, 239
WCOL Status Flag 234, 235, 236, 239
WWW Address 439
WWW, On-Line Support 5

X

XORLW 361
XORWF 362

NOTES:

© 2008 Microchip Technology Inc.

THE MICROCHIP WEB SITE

Microchip provides online support via our WWW site at www.microchip.com. This web site is used as a means to make files and information easily available to customers. Accessible by using your favorite Internet browser, the web site contains the following information:

- **Product Support** – Data sheets and errata, application notes and sample programs, design resources, user's guides and hardware support documents, latest software releases and archived software
- **General Technical Support** – Frequently Asked Questions (FAQ), technical support requests, online discussion groups, Microchip consultant program member listing
- **Business of Microchip** – Product selector and ordering guides, latest Microchip press releases, listing of seminars and events, listings of Microchip sales offices, distributors and factory representatives

CUSTOMER CHANGE NOTIFICATION SERVICE

Microchip's customer notification service helps keep customers current on Microchip products. Subscribers will receive e-mail notification whenever there are changes, updates, revisions or errata related to a specified product family or development tool of interest.

To register, access the Microchip web site at www.microchip.com, click on Customer Change Notification and follow the registration instructions.

CUSTOMER SUPPORT

Users of Microchip products can receive assistance through several channels:

- Distributor or Representative
- Local Sales Office
- Field Application Engineer (FAE)
- Technical Support
- Development Systems Information Line

Customers should contact their distributor, representative or field application engineer (FAE) for support. Local sales offices are also available to help customers. A listing of sales offices and locations is included in the back of this document.

Technical support is available through the web site at: http://support.microchip.com

READER RESPONSE

It is our intention to provide you with the best documentation possible to ensure successful use of your Microchip product. If you wish to provide your comments on organization, clarity, subject matter, and ways in which our documentation can better serve you, please FAX your comments to the Technical Publications Manager at (480) 792-4150.

Please list the following information, and use this outline to provide us with your comments about this document.

To: Technical Publications Manager Total Pages Sent _____

RE: Reader Response

From: Name _____

Company _____

Address _____

City / State / ZIP / Country _____

Telephone: (_____) _____ - _____ FAX: (_____) _____ - _____

Application (optional):

Would you like a reply?___Y ___N

Device: PIC18F8722 Family Literature Number: DS39646C

Questions:

1. What are the best features of this document?

_____

_____

2. How does this document meet your hardware and software development needs?

_____

_____

3. Do you find the organization of this document easy to follow? If not, why?

_____

_____

4. What additions to the document do you think would enhance the structure and subject?

_____

_____

5. What deletions from the document could be made without affecting the overall usefulness?

_____

_____

6. Is there any incorrect or misleading information (what and where)?

_____

_____

7. How would you improve this document?

_____

_____

© 2008 Microchip Technology Inc.

PIC18F8722 FAMILY PRODUCT IDENTIFICATION SYSTEM

To order or obtain information, e.g., on pricing or delivery, refer to the factory or the listed sales office.

PART NO.	X	/XX	XXX
Device	Temperature Range	Package	Pattern

Device	PIC18F6527/6622/6627/6722(1), PIC18F8527/8622/8627/8722(1), PIC18F6527/6622/6627/6722T(2), PIC18F8527/8622/8627/8722T(2); V_{DD} range 4.2V to 5.5V PIC18LF6627/6722(1), PIC18LF8627/8722(1), PIC18LF6627/6722T(2), PIC18LF8627/8722T(2); V_{DD} range 2.0V to 5.5V
Temperature Range	I = -40°C to +85°C (Industrial) E = -40°C to +125°C (Extended)
Package	PT = TQFP (Thin Quad Flatpack)
Pattern	QTP, SQTP, Code or Special Requirements (blank otherwise)

Examples:

a) PIC18LF6622-I/PT 301 = Industrial temp., TQFP package, Extended V_{DD} limits, QTP pattern #301.

b) PIC18LF6722-E/PT = Extended temp., TQFP package, standard V_{DD} limits.

Note 1: F = Standard Voltage Range
LF = Wide Voltage Range

2: T = in tape and reel TQFP packages only.

WORLDWIDE SALES AND SERVICE

AMERICAS

Corporate Office
2355 West Chandler Blvd.
Chandler, AZ 85224-6199
Tel: 480-792-7200
Fax: 480-792-7277
Technical Support:
http://support.microchip.com
Web Address:
www.microchip.com

Atlanta
Duluth, GA
Tel: 678-957-9614
Fax: 678-957-1455

Boston
Westborough, MA
Tel: 774-760-0087
Fax: 774-760-0088

Chicago
Itasca, IL
Tel: 630-285-0071
Fax: 630-285-0075

Dallas
Addison, TX
Tel: 972-818-7423
Fax: 972-818-2924

Detroit
Farmington Hills, MI
Tel: 248-538-2250
Fax: 248-538-2260

Kokomo
Kokomo, IN
Tel: 765-864-8360
Fax: 765-864-8387

Los Angeles
Mission Viejo, CA
Tel: 949-462-9523
Fax: 949-462-9608

Santa Clara
Santa Clara, CA
Tel: 408-961-6444
Fax: 408-961-6445

Toronto
Mississauga, Ontario,
Canada
Tel: 905-673-0699
Fax: 905-673-6509

ASIA/PACIFIC

Asia Pacific Office
Suites 3707-14, 37th Floor
Tower 6, The Gateway
Harbour City, Kowloon
Hong Kong
Tel: 852-2401-1200
Fax: 852-2401-3431

Australia - Sydney
Tel: 61-2-9868-6733
Fax: 61-2-9868-6755

China - Beijing
Tel: 86-10-8528-2100
Fax: 86-10-8528-2104

China - Chengdu
Tel: 86-28-8665-5511
Fax: 86-28-8665-7889

China - Hong Kong SAR
Tel: 852-2401-1200
Fax: 852-2401-3431

China - Nanjing
Tel: 86-25-8473-2460
Fax: 86-25-8473-2470

China - Qingdao
Tel: 86-532-8502-7355
Fax: 86-532-8502-7205

China - Shanghai
Tel: 86-21-5407-5533
Fax: 86-21-5407-5066

China - Shenyang
Tel: 86-24-2334-2829
Fax: 86-24-2334-2393

China - Shenzhen
Tel: 86-755-8203-2660
Fax: 86-755-8203-1760

China - Wuhan
Tel: 86-27-5980-5300
Fax: 86-27-5980-5118

China - Xiamen
Tel: 86-592-2388138
Fax: 86-592-2388130

China - Xian
Tel: 86-29-8833-7252
Fax: 86-29-8833-7256

China - Zhuhai
Tel: 86-756-3210040
Fax: 86-756-3210049

ASIA/PACIFIC

India - Bangalore
Tel: 91-80-4182-8400
Fax: 91-80-4182-8422

India - New Delhi
Tel: 91-11-4160-8631
Fax: 91-11-4160-8632

India - Pune
Tel: 91-20-2566-1512
Fax: 91-20-2566-1513

Japan - Yokohama
Tel: 81-45-471- 6166
Fax: 81-45-471-6122

Korea - Daegu
Tel: 82-53-744-4301
Fax: 82-53-744-4302

Korea - Seoul
Tel: 82-2-554-7200
Fax: 82-2-558-5932 or
82-2-558-5934

Malaysia - Kuala Lumpur
Tel: 60-3-6201-9857
Fax: 60-3-6201-9859

Malaysia - Penang
Tel: 60-4-227-8870
Fax: 60-4-227-4068

Philippines - Manila
Tel: 63-2-634-9065
Fax: 63-2-634-9069

Singapore
Tel: 65-6334-8870
Fax: 65-6334-8850

Taiwan - Hsin Chu
Tel: 886-3-572-9526
Fax: 886-3-572-6459

Taiwan - Kaohsiung
Tel: 886-7-536-4818
Fax: 886-7-536-4803

Taiwan - Taipei
Tel: 886-2-2500-6610
Fax: 886-2-2508-0102

Thailand - Bangkok
Tel: 66-2-694-1351
Fax: 66-2-694-1350

EUROPE

Austria - Wels
Tel: 43-7242-2244-39
Fax: 43-7242-2244-393

Denmark - Copenhagen
Tel: 45-4450-2828
Fax: 45-4485-2829

France - Paris
Tel: 33-1-69-53-63-20
Fax: 33-1-69-30-90-79

Germany - Munich
Tel: 49-89-627-144-0
Fax: 49-89-627-144-44

Italy - Milan
Tel: 39-0331-742611
Fax: 39-0331-466781

Netherlands - Drunen
Tel: 31-416-690399
Fax: 31-416-690340

Spain - Madrid
Tel: 34-91-708-08-90
Fax: 34-91-708-08-91

UK - Wokingham
Tel: 44-118-921-5869
Fax: 44-118-921-5820

01/02/08

© 2008 Microchip Technology Inc.