1. COMPACT 5 CNC – Introduction

Description of machine	1. 1 - 1. 5
Positions of toolholder	1. 6
The right hand side tool	1. 7
Working data	1. 8
Transmission steps	1. 9
Cutting values	1. 10 - 1. 11

Setting up a program structure

To learn programming means to learn to write down instructions which the other will understand; and this without presuming that the one who executes has special knowledges or will correct wrong or uncomplete instructions.

With which information do we have to feed the computer?

Experts from various fields sat together and discussed how such listings of instructions could be structured.

Aim: Simple, not depending on a certain language, practice-oriented, useable for all machine tools.

Procedure:

1. Analysis of operations on machine tools

↓

2. Determining of program structure.

Main Elements of the COMPACT 5 CNC

Main motor – Spindle drive – Ammeter

D.C. permanent magnetic motor

Variable speed range 1:7

Speed range 600 - 4000 r.p.m.

Input power (P1) 500 W

Output power (P2) 300 W

How do you change the motor speed with a D.C. motor?

By changing the power of the current.

Current limitations:

The motor is protected against overload through a current limitation. An overload could cause a burning out of the motor. Current limitation therefore at 4 ampere.

Ammeter:

Indicates the actual current consumption of the drive motor.

R.P.M. Performance Diagram

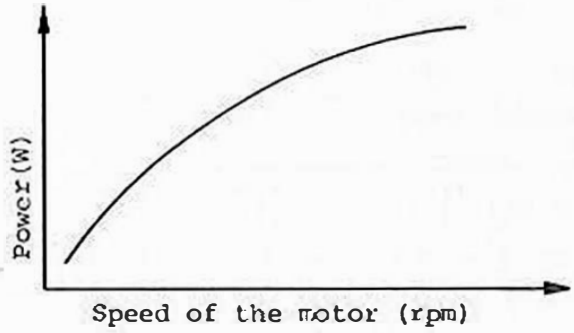

Up to machine number 80 09 50 the light barrier and the perforated disc on the motor pulley controlled the motor speed (see illustration).
Starting from machine number 80 09 51 the motor speed is controlled electronically (IxR compensation). Therefore light barrier and perforated disc are not mounted.

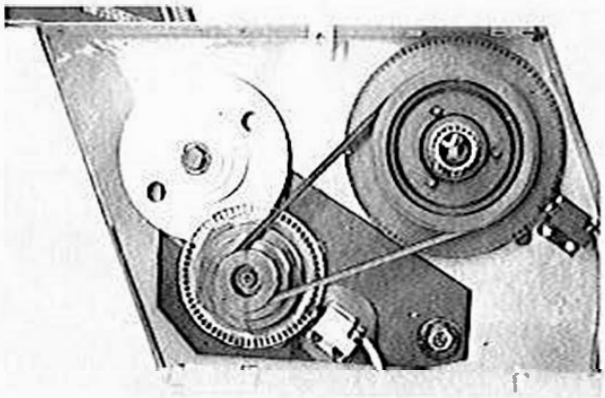

The belt pulley drive

The 6-pulley drive allows for a setting of the various ranges of revolutions of the main spindle.

Drive for range of revolutions BC1, BC2, BC3 (from Idler pulley to main spindle):

1. Belt pulley A (motor) belt pulley B (Idler pulley). The belt from A to B remains and is not changed.

2. Belt pulley B to belt pulley C (main spindle). The belt can be put on in 3 positions: BC1, BC2, BC3

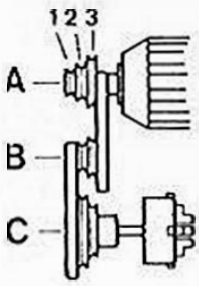

Drive for range of revolutions AC1, AC2, AC3

From motor pulley A to main spindle pulley C.

The Idler pulley runs idle.

Change the belt position:

- Loosen hexagon nut (1).
- Lift motor up
- Put belt onto desired pulley
- Push down motor and tighten hexagonal screw.

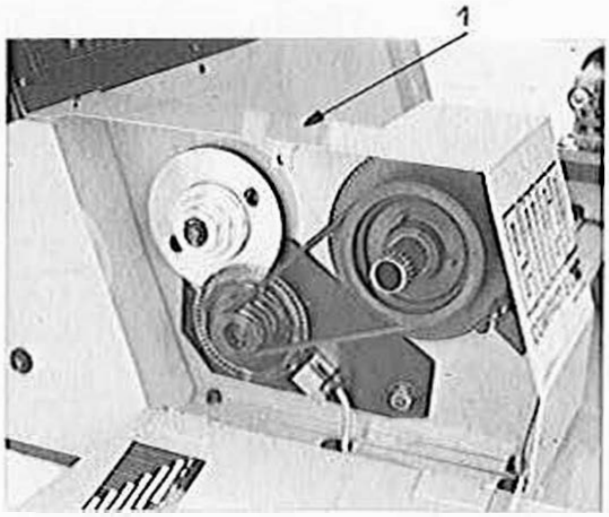

The main spindle – R.P.M.-display

Range of revolutions: 5o - 32oo r.p.m.
Spindle nose: EMCO standard
Hole through spndle: 16 mm
Inside spindle taper: MT 2

Clamping devices on main spindle:

- 3-jaw chuck Ø 8o mm
- Independent chuck Ø 9o mm
- Mounting plate Ø 9o mm
- Collet holder for collets ESX 25

Mounting instructions, chucking capacity, reversing of jaws, safety instructions - please refer to instruction book Compact 5.

PERFORATED DISC AND LIGHT BARRIER ON MAIN SPINDLE

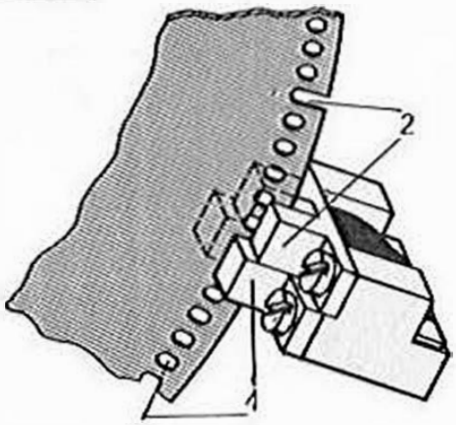

1. Function for all turning operations except when screw-cutting

Via perforation ring 1 and light barrier 1 the main spindle speed is indicated on the digital read-out of the CNC-panel.

2. Function when screw-cutting

- Perforation ring 1, light barrier 1:

  The speed of the main spindle is measured and reported to the Computer.

- Slot hole 2, light barrier 2:

  The special start position of the main spindle is reported to the computer.

Drive of slides

Step motors - Re-circulating ball screws

THE STEP MOTORS

Technical Data:

Single step 5°
Torque o,5o Nm

As the name says, a revolution of the motor is divided into steps.

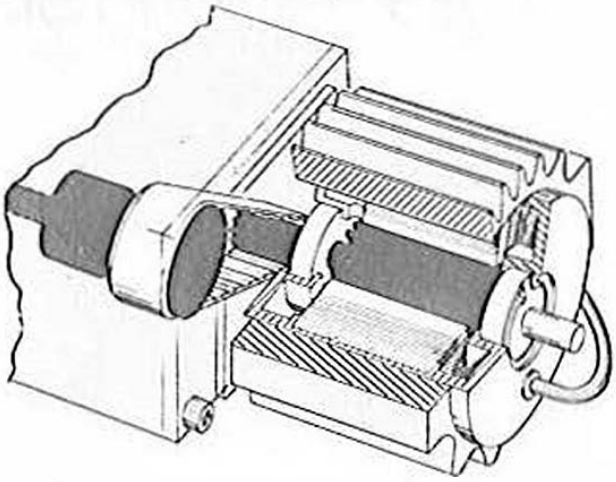

A revolution of the Compact 5 CNC step motors is divided into 72 steps, i.e. one step = angle of 5° (36o°÷72 = 5°).

The limitation of the traverse paths (the Tack-Tack sound)

If you move the slides to the limit positions or against a stop, you will hear a tack-tack sound. The step motor receives impulses for further movement, but cannot move any further. That means overload on spindles, nuts and guide-ways of the slides.

Thus you have to stop the feed when you work on "hand" operation.

You have to interrupt the program when you run on "CNC" operation.

Longitudinal- and cross slides

Technical Data:

- Traverse speed for longitudinal and cross slides:

  Rapid traverse speed 7oo mm/min

  Variable feed rates (hand-operation) 1o - 4oo mm/min

  Programmable feed rates (CNC-operation) 1o - 499 mm/min

- Smallest possible traverse path: o,o138 mm

- Traverse path longitudinal slide 3oo mm

- Traverse path cross slide 5o mm

- Indication on digital read-out in o,o1 mm

- Feed power on slides approx. 1ooo N

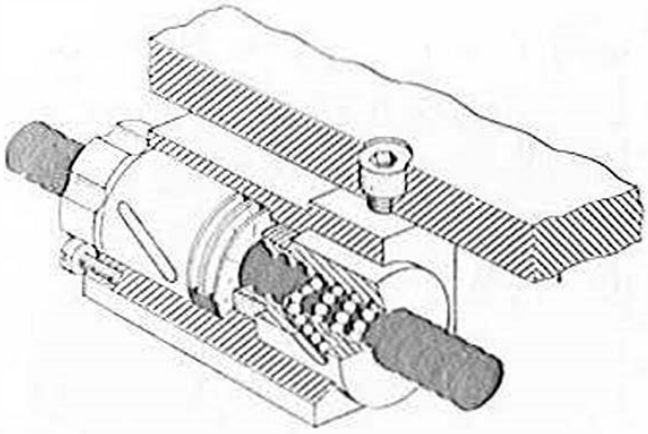

Ball screws - Preloaded nuts

Longitudinal and cross slides are driven via ball screws. The screws run play-free in the nuts (no backlash).

Reduction step motor - feed screws

Smallest slide movement (for longitudinal and cross slides)

When the step motor turns by 5° (with the smallest step the slide will move o,o138 mm).

Traverse path indication on digital read-out - slide movement

The traverse path will be indicated on the digital read-out in o,oi mm

Steps (angle of step motors)	Traverse path (mm)	Read-out 1/1oo mm
1. Step (5°)	o,o138	1
2. Step (1o°)	o,o277	3
3. Step (15°)	o,o416	4
4. Step (2o°)	o,o555	6
5. Step (25°)	o,o694	7
6. Step (3o°)	o,o833	8
7. Step (35°)	o,o972	1o
8. Step (4o°)	o,111	11
9. Step (45°)	o,125	12

The toolholder

The tool holder can be fixed in a front or back position on the cross slide. Ranges of diameter, please refer to page 1.6 .

Max. tool section: 12x12 mm

Positioning of tool bit at center height:

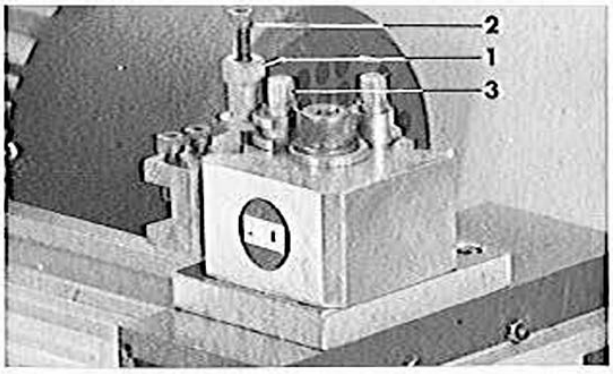

1. Mount tool bit in tool holder

2. Mount tool holder in tool holder block.

3. Turn nut (1) until tool bit reaches center height. Use center for positioning of tool bit at center height. Tighten screw (2) and tool holder with fixing screw (3).

Positioning of tool holder at required angle:

With pre-setting gauge:
Refer to chapter on tool pre-setting.

Without pre-setting gauge:
Toolholder to be clamped parallel to cross slide.

The tailstock

The tailstock serves to support the workpiece by using a center - as well as for drilling/centering.

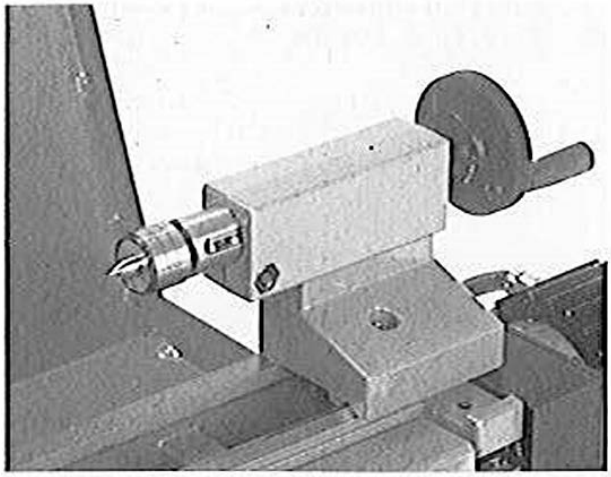

Drilling operation:

Drills up to ⌀8 mm to be mounted in drill chuck. Drills of more than 8 mm need a MT1 so that they can be mounted directly into the tailstock barrel.
Feed via handwheel and tailstock sleeve.

Mounting instructions for clamping devices, clamping capacity, mounting of vertical milling and drilling attachment, safety tips, etc. to be found in instruction book COMPACT 5.

Positions of Toolholder

The toolholder can be clamped in front position and in back position.

Front position

Outside diameter
Ø 0 to Ø 80 mm

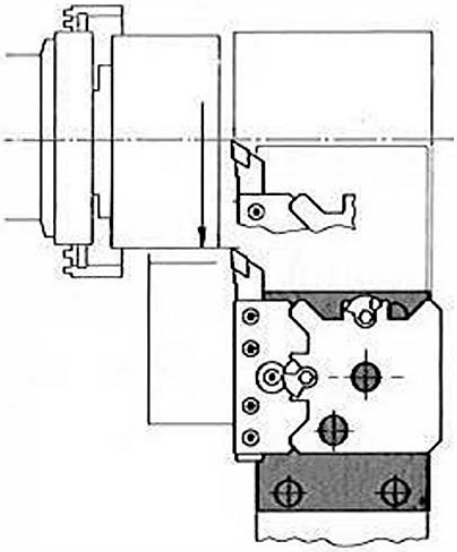

Interior diameter
Ø 14 to Ø 100 mm

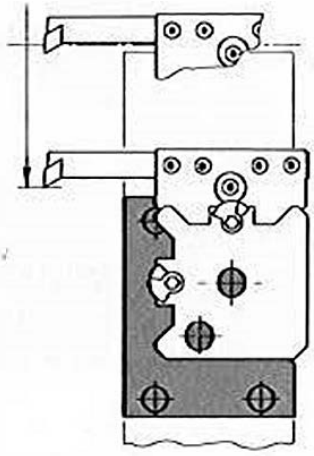

Back position

Outside diameter
Ø 20 to Ø 120 mm

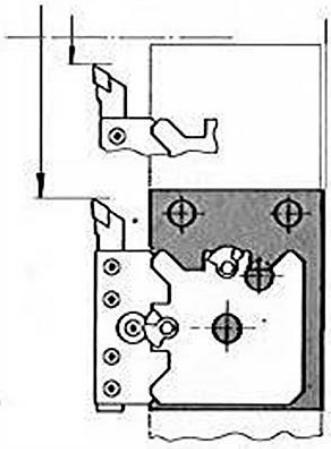

Interior diameter
Ø 50 to Ø 130 mm

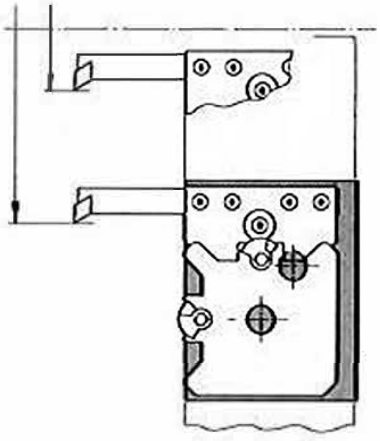

Please clamp the toolholder in the front position for our programming exercises.

Positions of Toolholder

The toolholder can be clamped in front position and in back position.

Front position

Range of outside diameter cutting Ø 0 to Ø 3.2"

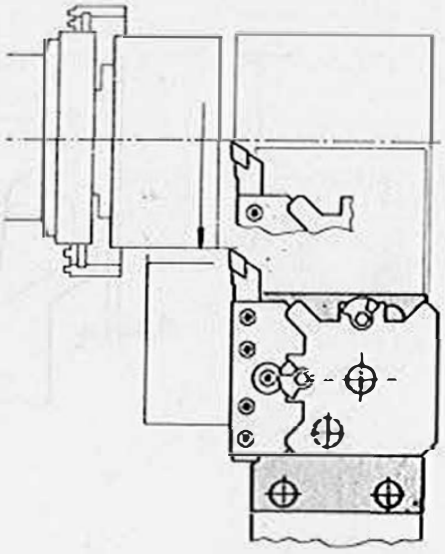

Range of inside diameter cutting Ø .56" to Ø 4"

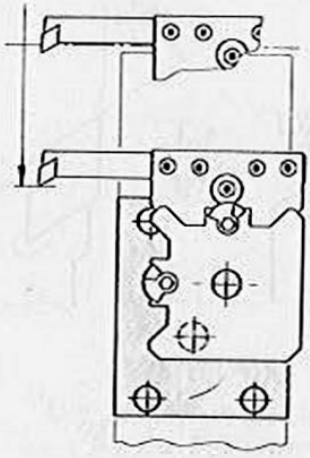

Back position

Range of outside diameter cutting Ø .8" to Ø 4.8"

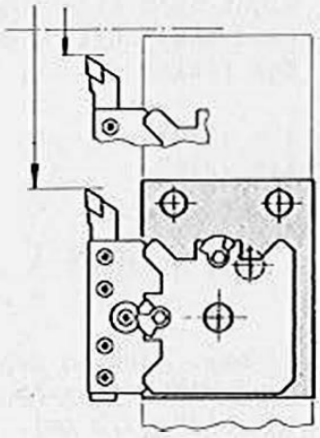

Range of inside diameter cutting Ø 2" to Ø 5.2"

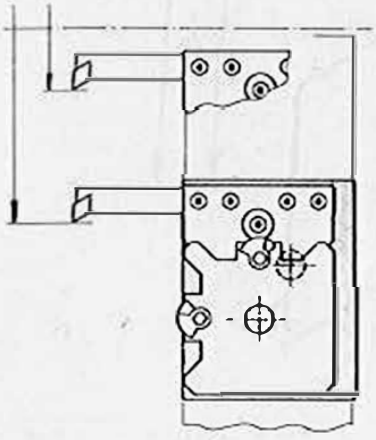

Please clamp the toolholder in the front position for our programming exercises

Tooling of COMPACT 5CNC

The programming exercises are based on the right hand side.
On the pages 8.5 to 8.15 the data and the tool geometry and possibilities for the respective tool are shown.

For instance right hand side tool.

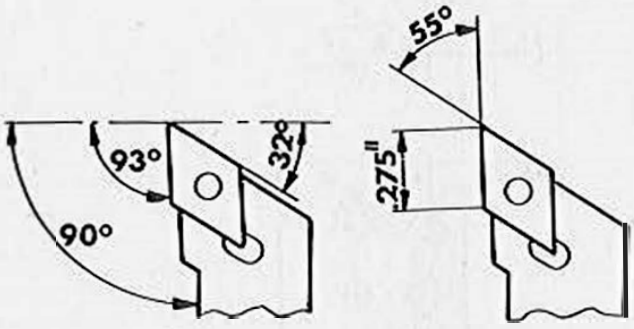

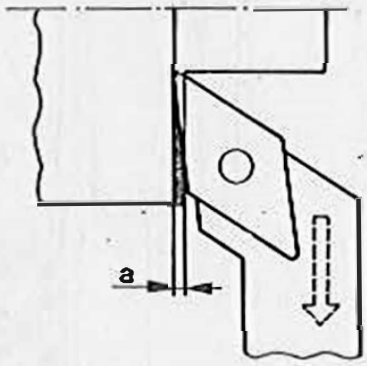

Clearance angle of tool bit $\alpha = 93^\circ$
with tool shank mounted at 90°
to turning axis.

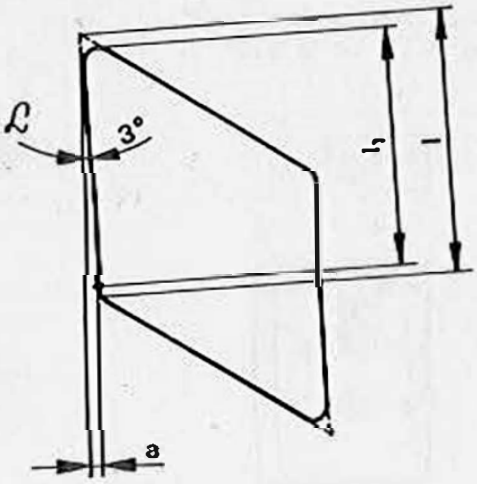

Be aware of the max. cutting depth of the respective tools

Example: Right hand side tool (TO1)
Find max. cutting depth "a" for facing

$l = .275"$
$l_1 = .236"$
$\sin\alpha = \frac{a}{l_1}$
$a = l_1 \times \sin\alpha = .236" \times .052"$
$= .012"$ approx.

So max. cutting depth for facing with right hand side tool is .012" (0,3 mm).

The Right Hand Side Tool (T01)

Dimensions – Applications

The exercises make it possible to use the right hand side tool for all programming work, part 1.
Further tools are explained in part 2 of the programming exercises.

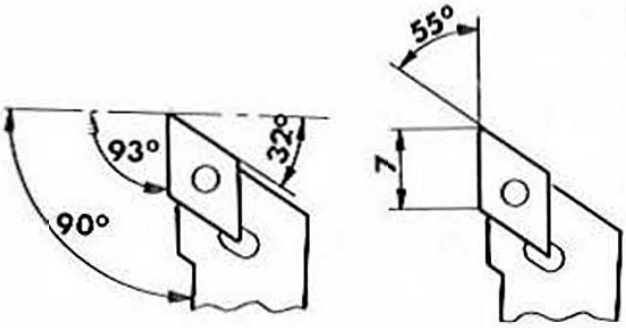

Examples of application:

Clearance angle $\varkappa = 93^{o}$

1. Longitudinal turning, facing and angle turning:

up to α = max. 90°
The depth of cut "a" with facing must not be bigger than o,3 mm, otherwise the chip flow is bad.

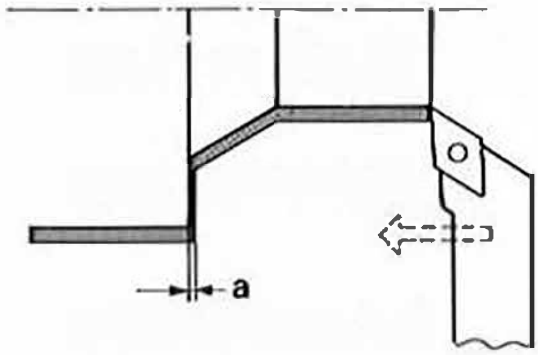

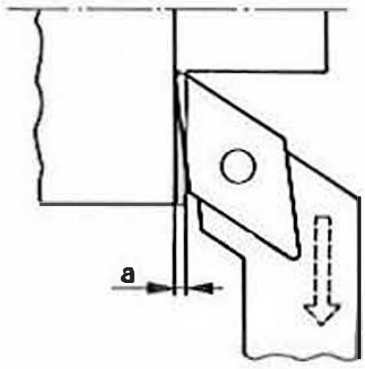

2. Shape turning:

β must not be bigger than 30°, otherwise there will be insufficient clearance angle.

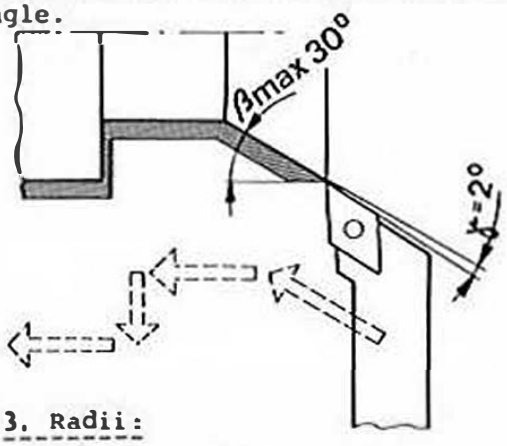

3. Radii:

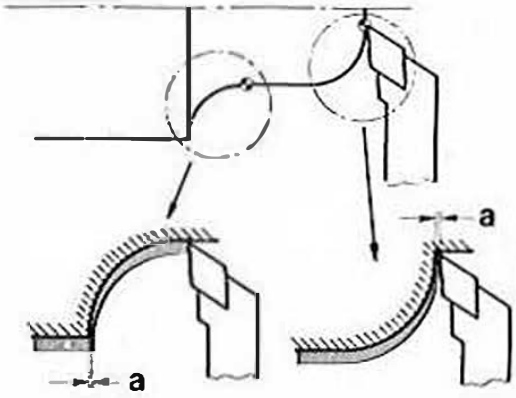

Depth of cut at the end of the 4th part of circumference max. o,3 mm

Depth of cut at the Start of the 4th part of circumference max. o,3 mm.

OPERATING HINT 1

If you set the toolholder in another angle position, $\varkappa = 100^{o}$, you can take bigger cuts when facing.

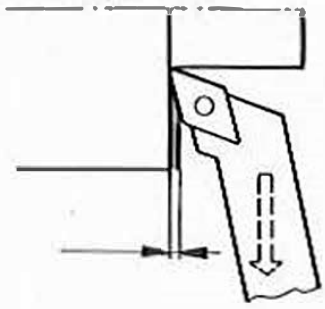

OPERATING HINT 2

Move with the transparent scale drawing of the tool bit along the shape of the drawing. You will immediately see if the depth of cut is too big.

Working Data

1. Cutting speed (Vs)

$$V_S \text{ (m/min)} = \frac{d\text{(mm)} \times \pi \times S\text{(U/min)}}{1000}$$

V_S = Cutting speed

d = Dia. of workpiece

S = Speed of main spindle

The max. acceptable cutting speed depends on: -

- Material of workpiece:

The higher the strength of the material, the lower the cutting speed.

- Material of tool:

Carbide tools allow for a higher cutting speed than HSS tools.

- Feed:

The larger the feed the lower the cutting speed.

- Depth of cut:

The larger the depth of cut the smaller the cutting speed.

Data for cutting speed and feed can be found in the various tool brochures of the manufacturers. These data are the technological basis for programming.

Cutting speed for programming exercises on the Compact 5 CNC

Workpiece material: automatic aluminium

Tool: carbide tips

Cutting speed for turning: 15o-2oo m/min

Cutting speed for parting off: 6o-8o m/min

Feed size for turning: o,o2-o,1 mm/rev.

Feed size for parting off: o,o1-o,o2 mm/r

2. Calculation of spindle speed (S)

The cutting speed and the workpiece dia. enable you to calculate the speed of the main spindle.

$$S \text{ (rev/min)} = \frac{V_S \text{ (mm/min)} \times 1000}{d \text{ (mm)} \times \pi}$$

3. Calculation of feed (F)

On the Compact 5 CNC you program the fe in mm/min

Conversion:

$$F \text{ (mm/min)} = S \text{ (rev/min)} \times F \text{ (mm/rev)}$$

F (mm/min) = Feed in mm per minute

S = Speed of main spindle

F (mm/rev) = Feed in mm per revolution

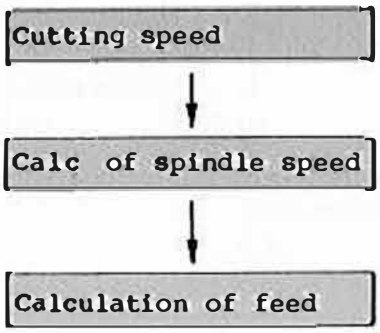

The charts on the following page save the calculation work.

Working Data

1. Cutting speed (Vs)

- o Spindle speed
- o Cutting speed
- o Feed
- o Cutting depth

depend an many factors

The most important are:

- o Material of tool
- o Dimension of tool
- o Tool geometry
- o Work material
- o Method of clamping
- o Power of machine
- o Size and Rigidity of machines
- o Type of coolant
- o etc.

The values for cutting speeds are listed in Technical Handbooks, tool guards and Instruction Manuals.

$$V_s \left[\frac{\text{feet}}{\text{minute}}\right] = \frac{D\,[\text{inch}] \times \pi \times \text{rpm}}{12}$$

Cutting speed for programming exercises on the Compact 5 CNC

Workpiece Material: Free aluminium
Tool: carbide tips
Cutting speed for turning: 500-700fpm
Cutting speed for parting off: 200-250fpm

Note: for finishing cuts the cutting speed can be increased 25%

2. Calculation of spindle speed (S)

The cutting speed and the workpiece dia enable you to calculate the speed of the main spindle.

$$S\,(\text{rpm}) = \frac{V_s \left[\frac{(\text{feed})}{(\text{min})}\right] \times 12}{D\,(\text{inch}) \times \pi}$$

3. Calculation of feed (F)

On the Compact 5 CNC you program the feed speed (F2) in inch per minute (I.P.M.)

Calculation:

F1 = Feed size (inch per revolution)
F2 = Feed speed (inch per minute)
S = Main spindle speed

$$F2\left[\frac{\text{inch}}{\text{min}}\right] = S\,(\text{rpm}) \times F1\ (\text{inch per rev.})$$

The values of the feed depend also on factors as machine power, machine size, machine rigidity, tool, workpiece material etc. These values can be found in technical handbooks, tool books etc.

General rule:

The larger the depth of cut the smaller the feed size. The smaller the feed size the smoother the surface.

Feed sizes (F1) for exercises on COMPACT 5 CNC
Turning: .001" - .004" per revolution
Parting off: .0005" - .001" per rev.

Calculations

Cutting speed
↓
Calc. of spindle speed
↓
Calculation of feed

The charts on pages 1.10/1.11 save the calculation work.

Finding the Cutting Values

1. Finding the R.P.M.

You know
- Diameter of workpiece
- Suggested cutting speed(feedper minute)

From the chart you can select the r.p.m.

Example:

Diameter of workpiece: 1.6"
Cutting speed: 500 feet/minute
Therefore: 1200 rpm. approximately

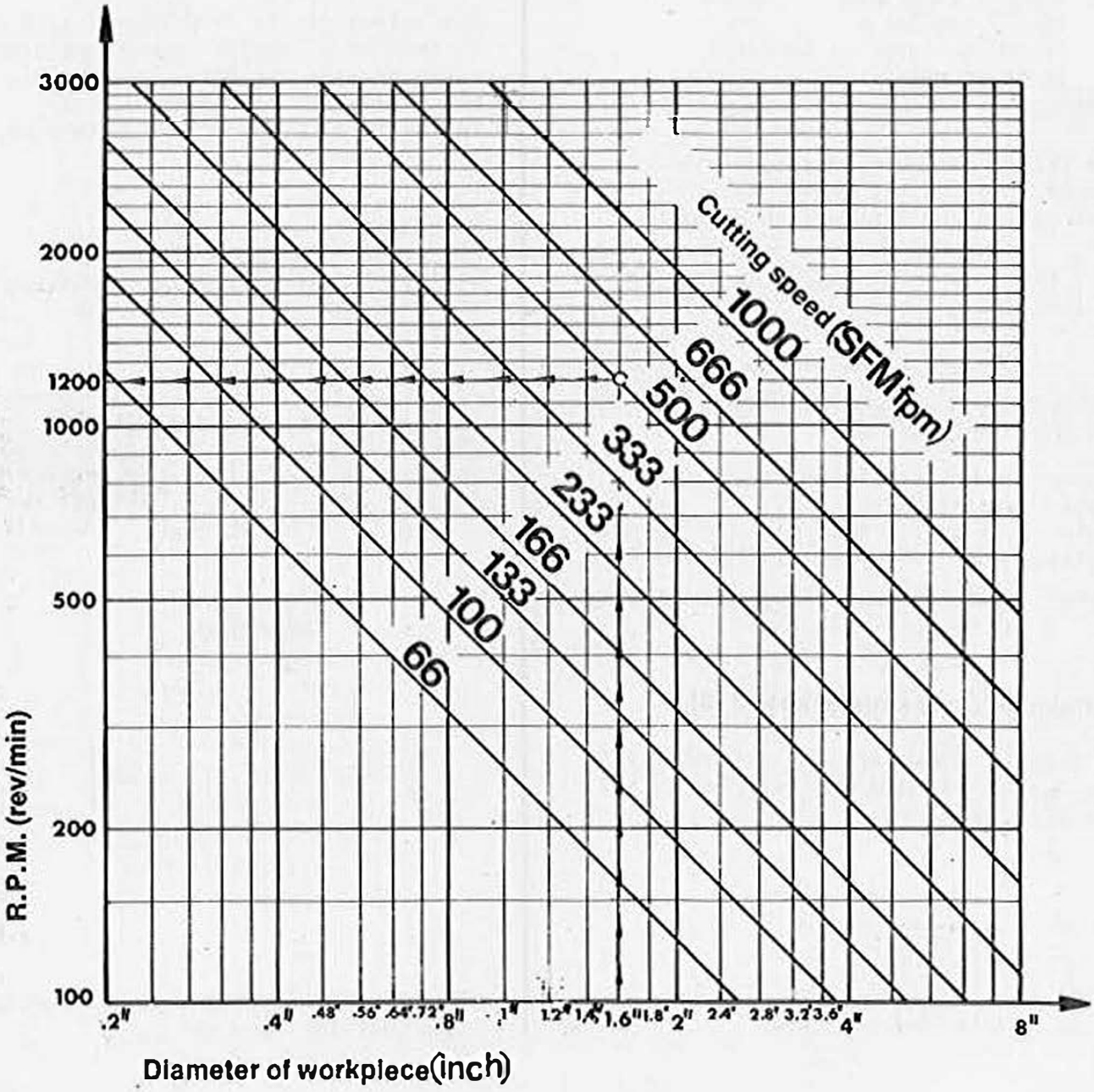

Selection of Transmission Steps on COMPACT 5 CNC

The performance curve of a direct current motor depends on the number of revolutions. Choose the transmission step of the pulley drive such that the revolutions of the motor are within an optimum efficiency range (blue field).

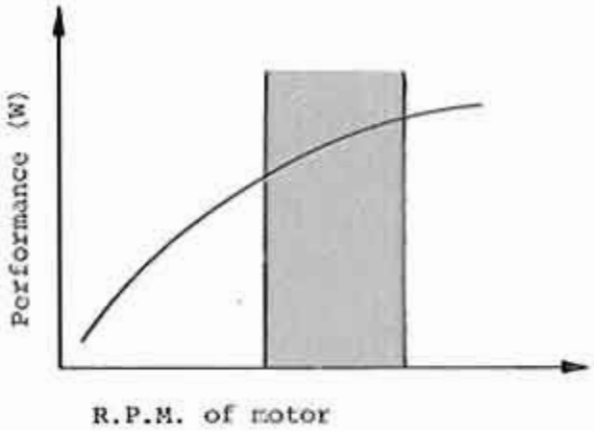

Example:

Number of revolutions for rough cuts: 600 rpm.

Number of revolutions for fine cuts: 800 rpm.

Optimum transmission step: AC1

With pulley position AC2 you would come into an unfavourable performance range.

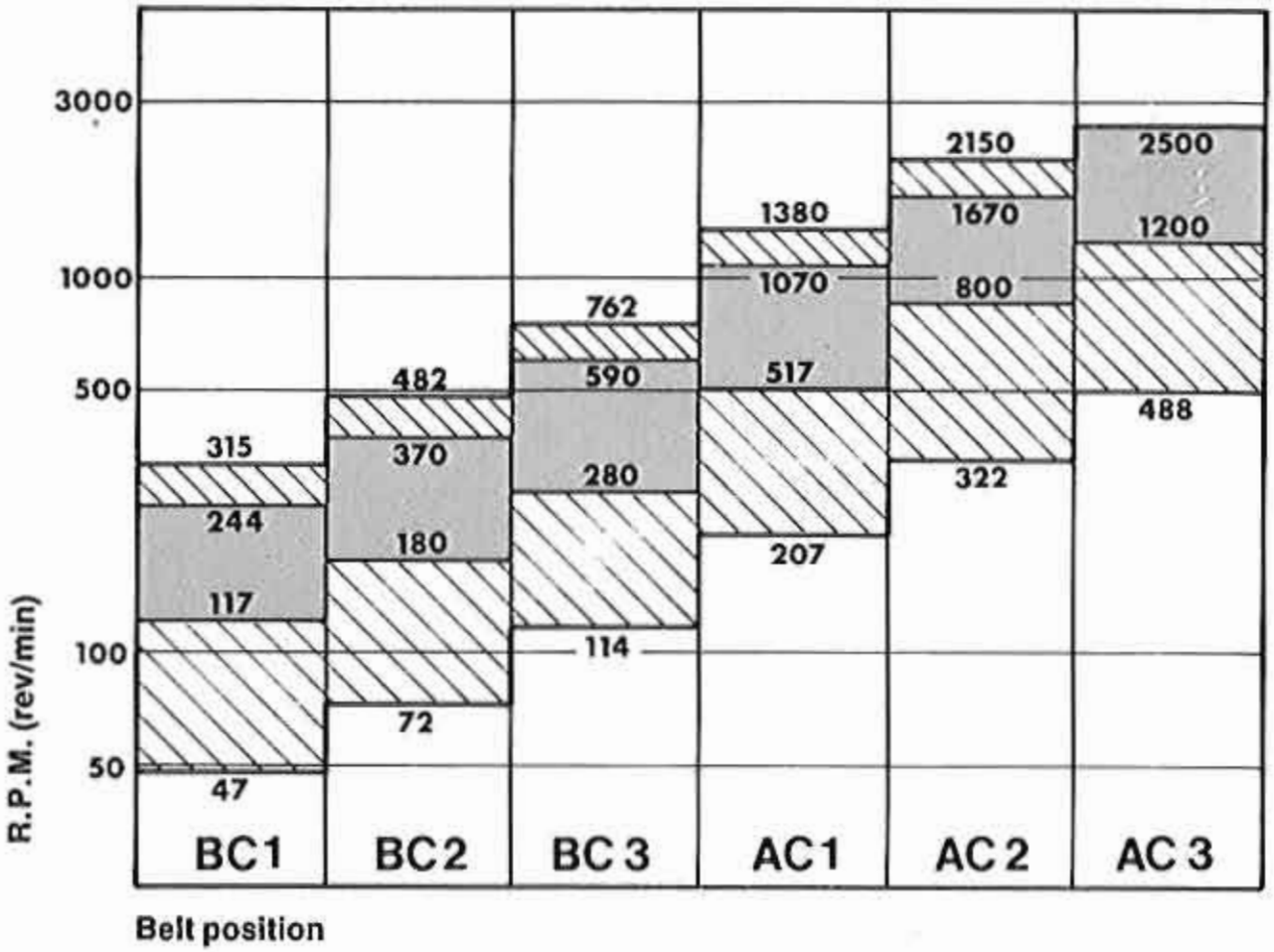

Finding the Cutting Values

1. Finding the R.P.M.

You know
- Diameter of workpiece
- Suggested cutting speed

From the chart you can select the r.p.m.

Example:

Diameter of workpiece: 4o mm
Cutting speed: 15o m/min
Therefore: 12oo rpm.

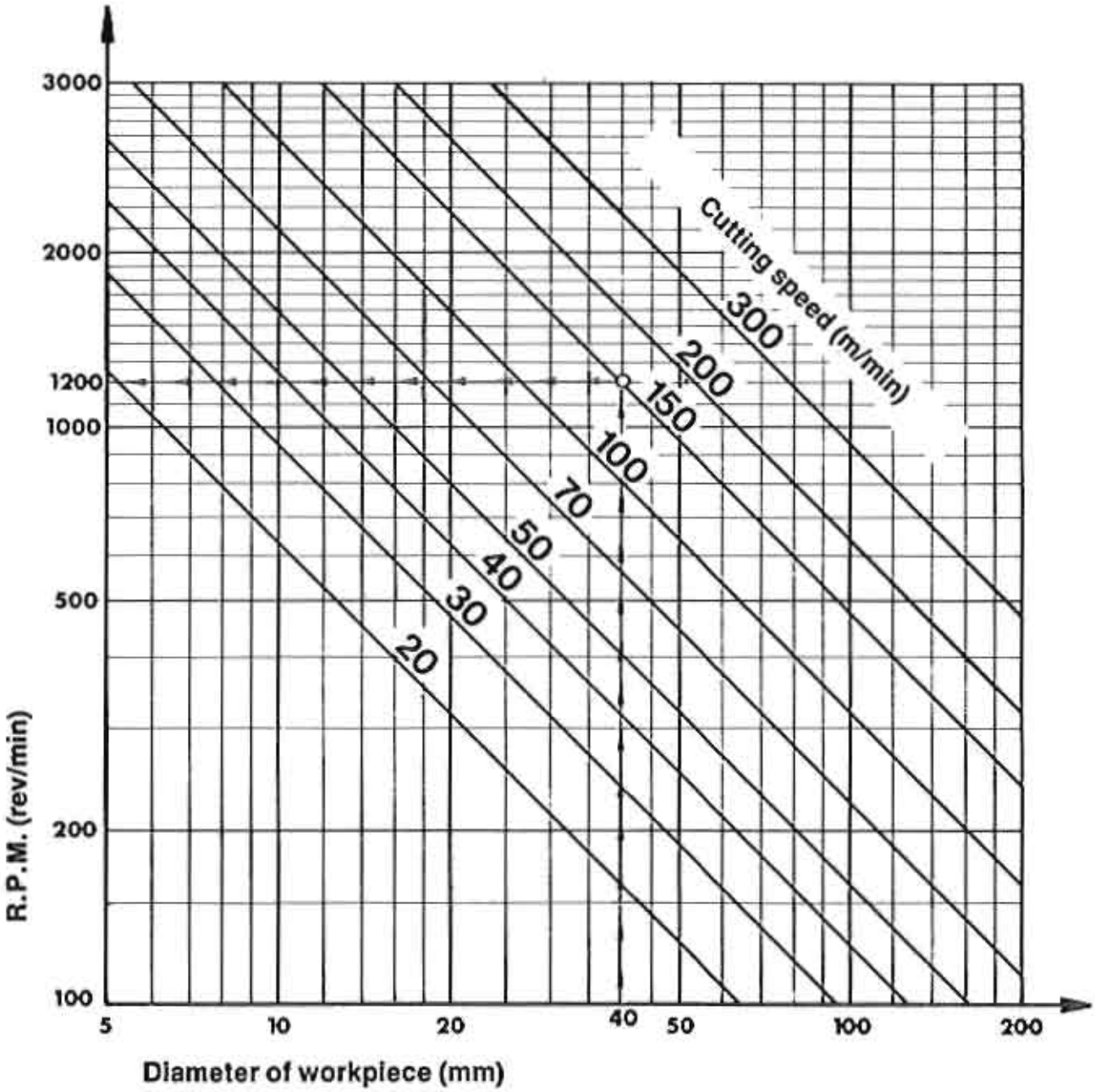

2. Finding the feed speed in mm/min

You know
- Diameter of workpiece
- Feed size in rpm.

From the chart you select the feed in mm/min.

Example:

Spindle speed: 1200 rpm.
Feed: .0024" per revolution
Results in feed speed: 2.8" per Minute approximately

Feed chart

Conversion of feed(inch/rev into inch/min and vice-versa)

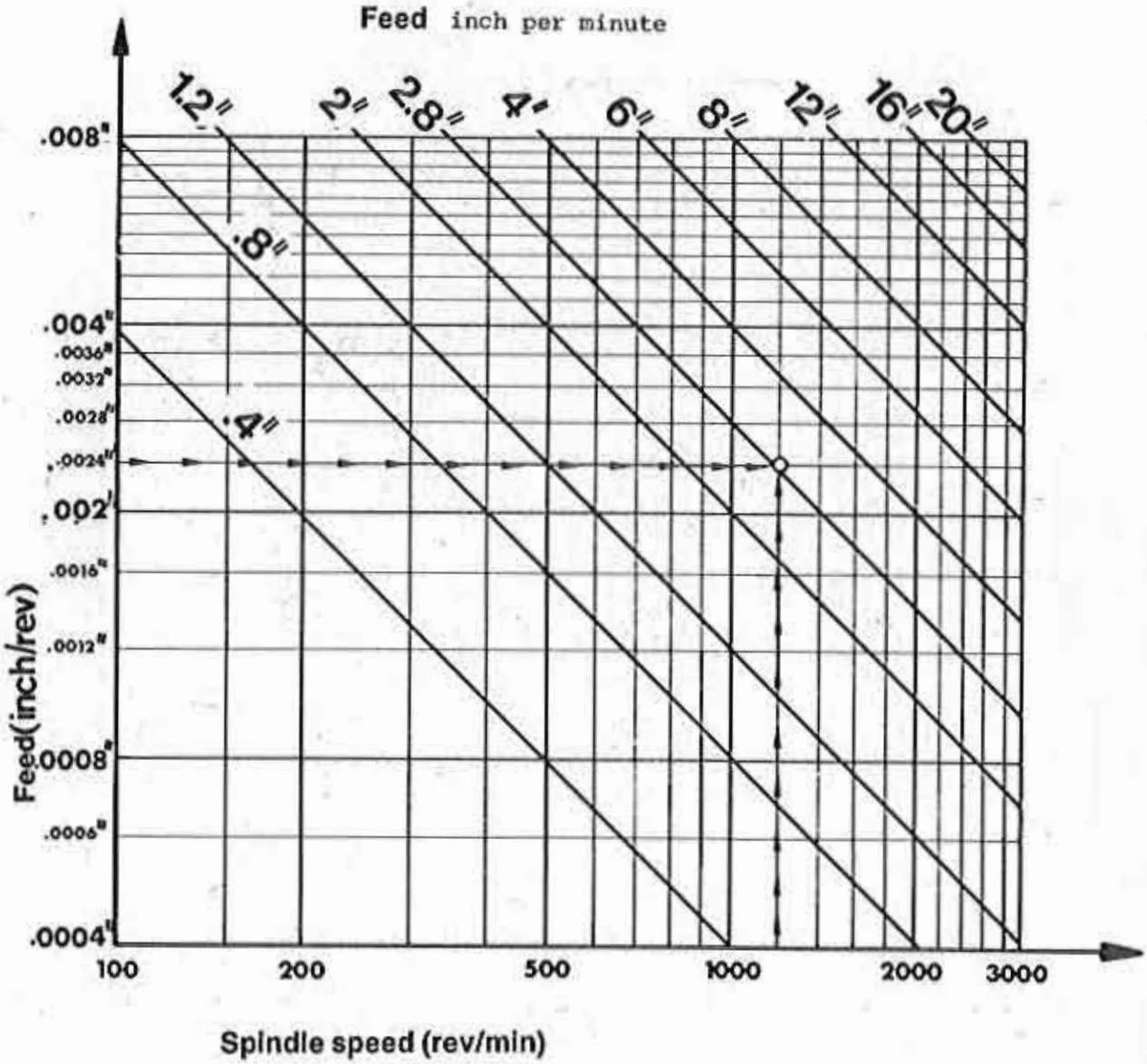

2. Finding the feed speed in mm/min

You know
- Diameter of workpiece
- Feed size in rpm.

From the chart you select the feed in mm/min.

Example:

Spindle speed: 12oo rpm.
Feed: o,o6 mm/rev.
Results in feed speed: 7o mm/min

Feed chart

Conversion of feed (mm/ref into mm/min and vice-versa)

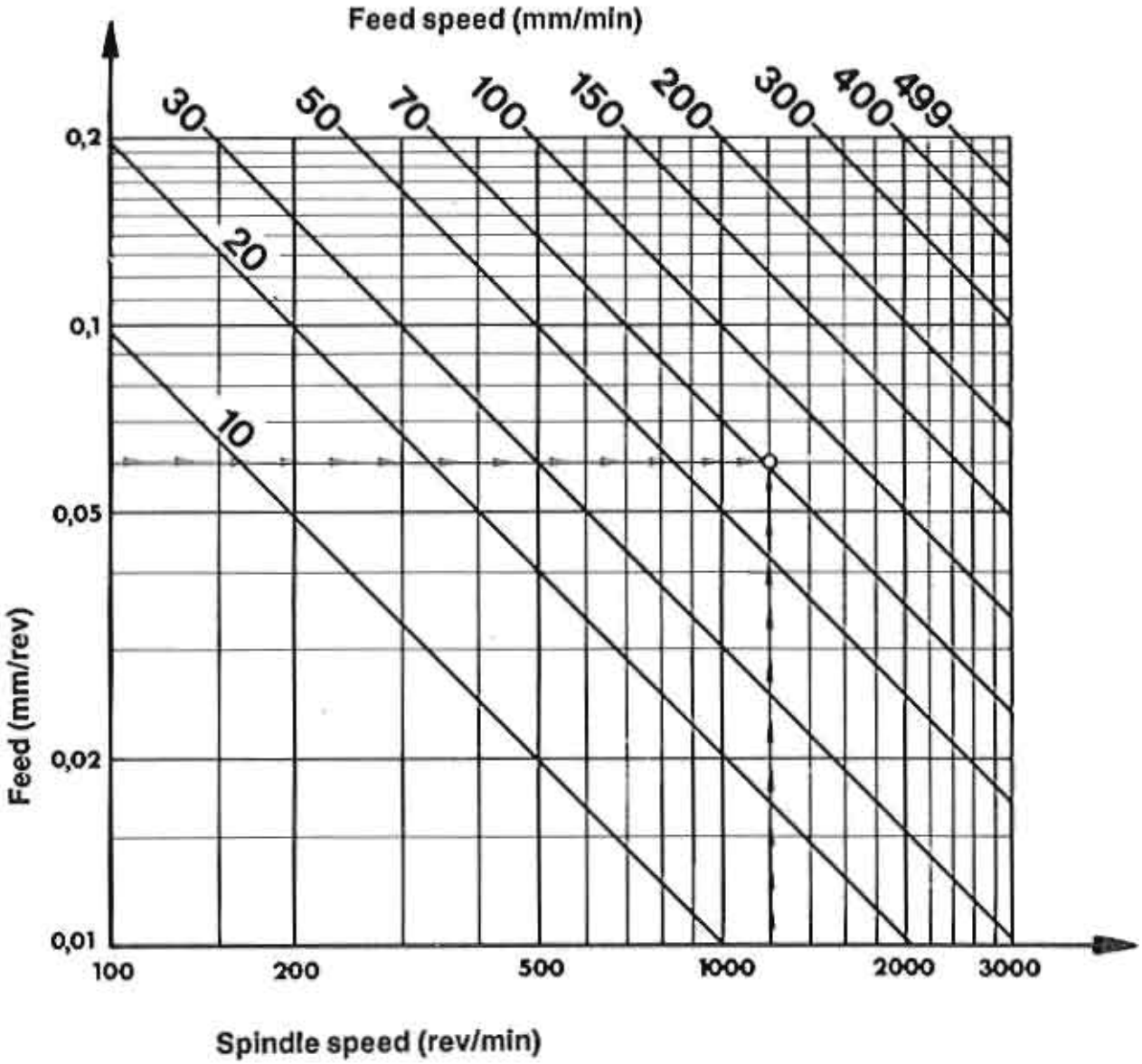

2. Hand Operation

Operating elements	2. 1
Traverse indication	2. 3
The Plus-Minus-Sign	2. 5
Inching operation	2. 7
Switch over	2. 9
Input of traverse path	2. 11 - 2. 13
Cutting-off power of step motors	2. 15
Positioning the tool	2. 17 - 2. 19

Operating Elements Hand Operation
(Summary)

OPERATION ELEMENTS - HAND-OPERATED

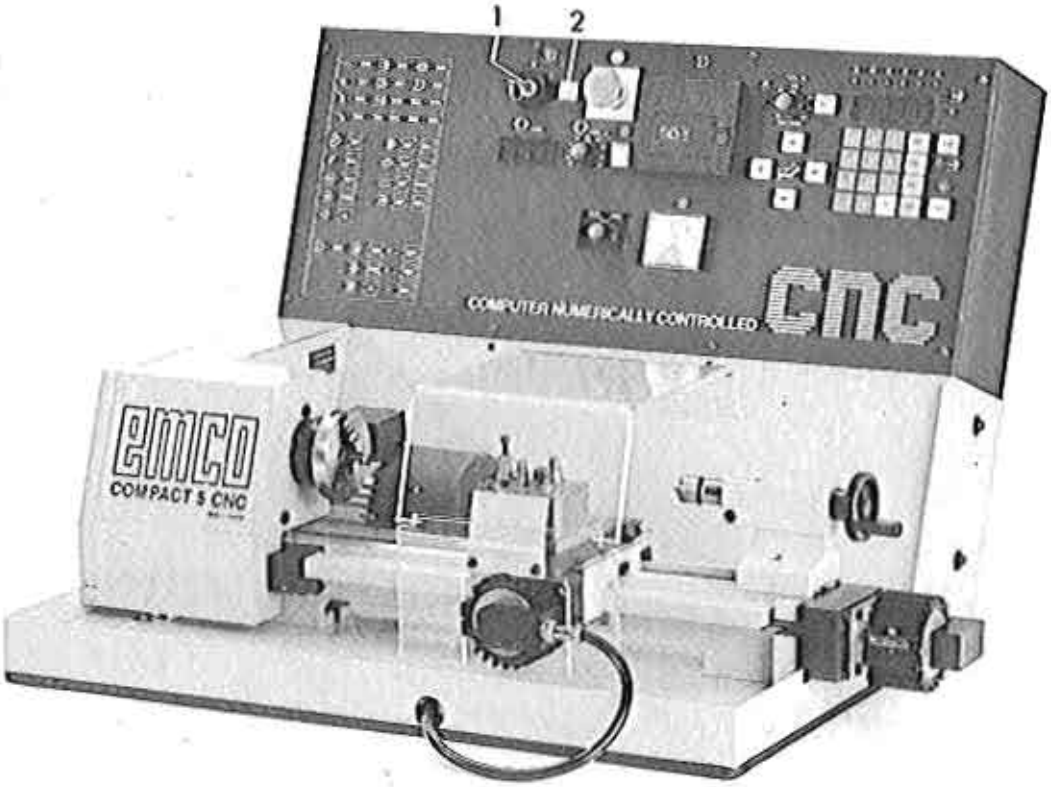

1. Main switch

Turn key to the right. Machine and control system are energized.

2. Control lamp - main switch

When main switch is on, control lamp (2) is on.

3. Switch for drive of main spindle

4. Knob for control of main spindle speed

5. Display of main spindle speed

6. Knob for setting feed rate

In Z-direction (saddle) and X-direction (cross slide). Infinitely variable from 1o - 4oo mm/min.

7. Control lamp - Hand-operation

The slides can only be moved by hand when lamp (7) is on.

8. Key board for feeds

in ± X and ± Z direction

The symbol for slide shows the direction of movement and the relative key. The slides move at pre-set feed rate.
Tip operation: if you just tip the key slightly, the relative slide will move by 0,01 mm.

9. Rapid traverse key

If you press the feed key and the rapid traverse key at the same time, you achieve rapid movement of saddle or cross slide.

Operating Elements Hand Operation

Select inch or metric programming before switching on the machine. If you change inch to metric in mode hand operation, the display does not change. If you change in CNC-operation, alarm A13 will appear if the memory is not empty.

To point 4

To adjust speed within a range

To adjust spindle speed of the machine within any given range simply turn the control knob until the spindle speed display shows the desired speed.

To point 6:

Knob for setting feed rate.
Infinitely variable from 1o-4oo mm/min. that is .4" to 16".
The values on the front plate show the feed in mm per minute.

You will notice that the adjustment is calibrated in metric units (mm/min). To set a feed rate in inches per min. multiply the desired value by 25 and set the adjustment knob accordingly. For example, to set a manual feed rate of 4 inches per minute; multiply 4x25=100; and set the knob so that the mark aligns with 100 on the scale.

When using the manual operating mode to touch off on the stock for setting reference points it is advisable to keep the manual feed rate set fairly slow. A rate of 1 to 2 in./min (25 to 5o on the scale) will allow you to move in slowly to approach the workpiece.
This will lessen the risk of overshooting your mark and cutting too deply into the workpiece.

Conversion for inch feeds "hand-operation:

mm/min	Inch/min
1o	o,4
25	1
5o	2
1oo	4
2oo	8
3oo	12
4oo	16

To point 8:

Tip operation: if you just tip the X or Z keys slightly, the relative slide will move by 0.000546.

Calculation of actual traverse paths:

Metric traverse path:

$$\frac{\text{Number of steps}}{72} = \text{traverse path in mm}$$

Inch traverse path:

$$\frac{\text{Number of steps}}{72} : 25{,}4 = \text{Traverse path in inch}$$

Steps (angle of step motor)	Traverse path in inch	Indication/read-out in 1/1000 inch
1. path (5°)	0,000546	1
2. path (10°)	0,00109	1
3. path (15°)	0,00164	2
4. path (20°)	0,00218	2
5. path (25°)	0,00273	3
6. path (30°)	0,00328	3
.	.	.
.	.	.
.	.	.

To point 9:

Rapid traverse feed 2.75 inch/minute

To point 10:

Display shows the paths
In inch mode the ± X and ± Z paths are shown in thousandth of inch. (0.001")
The minus sign comes as a point on the display.

• 324	= - .324"

To point 12:

With 100-115 V machines the current consumption should not exceed 4 Amperes. For overload protection of the motor, the power consumption is cut with 8 Amperes.

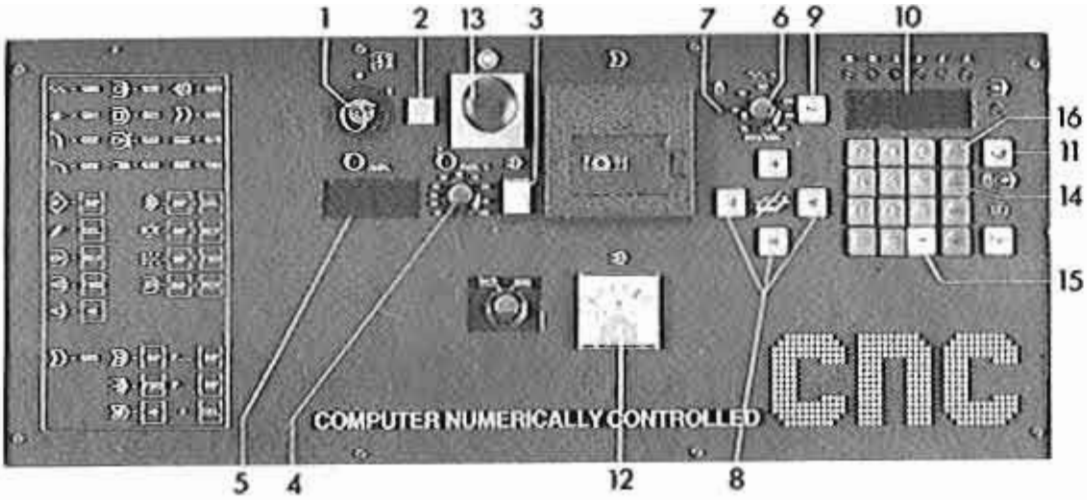

1o. Display shows the paths

In ± X and ± Z-direction in hundredth of mm. The minus sign comes as point on the display.

| • | 1 | 5 | 2 | = - 1,52 mm

11. Switch key: hand-operation to CNC-operation

If you press the key HAND/CNC, the light jumps from control lamp hand-operation to control lamp CNC-operation. If you press again, the light jumps back.

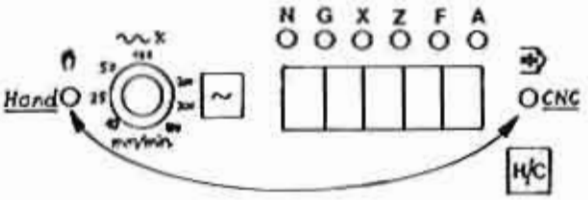

12. Ammeter for drive motor of main spindle

The ammeter indicates the actual current consumption of the drive motor. To protect the motor against overload, the current consumption must not exceed 2 Ampere at continuous operation. The load can be diminished by reducing depth of cut, feed rate or belt position.

For overload protection of the motor, the maximum power consumption is cut with 4 Amperes.

13. Emergency-stop-button

When pushing the emergency-stop-button, the current is cut from the main motor, feed motors and control unit.

Disengaging emergency-stop-button:

Turn button to the left. Switch on main switch.

14. DEL key

When pressing the DEL key, you clear X- and Z-display numbers (compare exercise).

15. The X/Z switch over key →

When operating the forward key →, the display is showing path X, jumps to path Z and vice versa. So you can read both paths (X + Z).

16. Input key INP

(Compare exercise)

17. Belt pulley drive

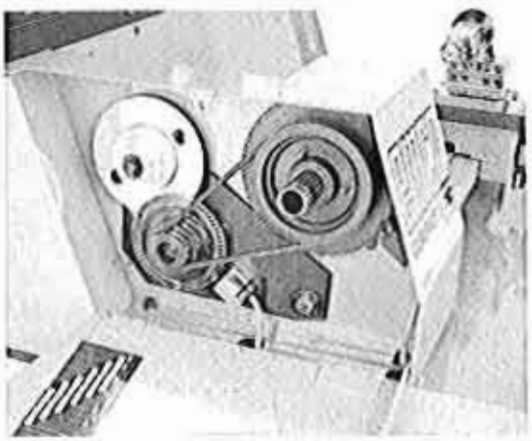

Hand Operation

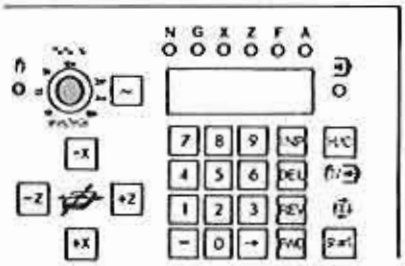

With hand-operation you can carry out longitudinal turning and facing.
The feed rate can be set by using the knob.

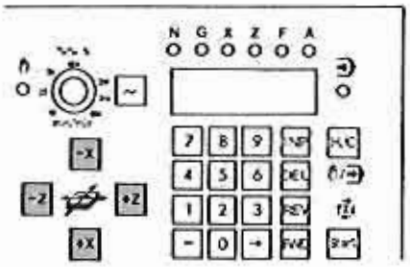

TRAVERSE MOVEMENT OF SLIDES

Press key +Z, -Z, +X, -X. The slides move in the indicated direction with the given feed rate.

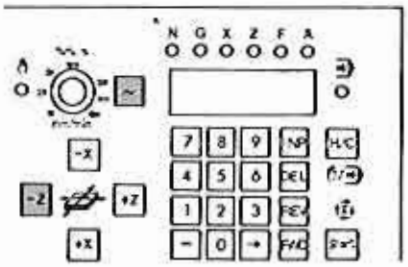

RAPID TRAVERSE OF SLIDES

If you press the direction key and the rapid traverse key at the same time, the slide will move with rapid traverse speed. Test it.

Traverse indication on read-out

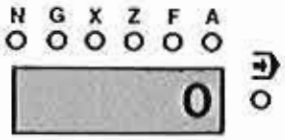

- When you switch on the machine, on the digital read-out appears 0.

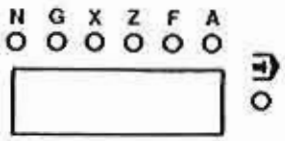

- If you traverse in ±Z-direction, the read-out darkens, the Z-lamp lights up.

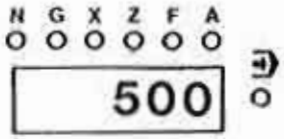

- If you take your finger off the Z-keys, you see on the read-out the traverse path indicated in thousandth of inch (with .5" traverse path you see the number 5oo indicated).

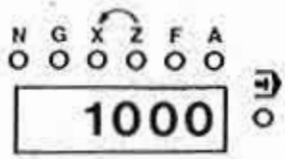

- If you press one of the X-keys, the lights jumps to X. The traverse path appears after you release the key (with X = 1" the read-out indicates 1ooo)

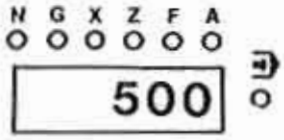

- If you take your finger off the Z-keys, you see on the read-out the traverse path indicated in hundredth of mm (with 5 mm traverse path you see the number 5oo indicated).

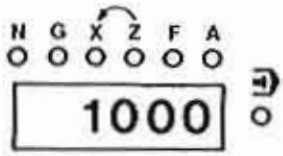

- If you press one of the X-keys, the light jumps to X. The traverse path appears after you release the key (with X = 1o mm the read-out indicates 1ooo)

The plus- and minus sign

Reference and starting point for the ± indication is always the position of the slides when switching on the machine.

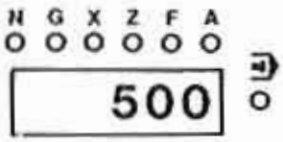

Plus sign

- If you move the cross or longitudinal slide into plus-direction, you see on the digital read-out only the number.

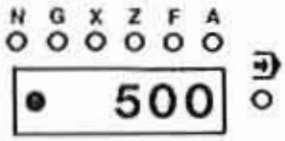

Minus Sign

- If you move the slide into minus- direction, you see on the left side of the read-out a point.

  The point indicates the "-" sign.

Inching operation

If you inch on one of the feed keys, a pulse is given to the step motor.
The pulse moves the slide by .000546"
On the read-out the figure 1 is indicated (if it has been zero before). The computer brings .000546" to the nearest round figure. The rounded figures are indicated in thousandth of inch.

Steps (angle of step motor)	Traverse path in inch	Indication/read-out in 1/1000 inch
1. path (5°)	0,000546	1
2. path (10°)	0,00109	1
3. path (15°)	0,00164	2
4. path (20°)	0,00218	2
5. path (25°)	0,00273	3
6. path (30°)	0,00328	3
. . .	. . .	. . .

Note: Select inch or metric indication before switching on main switch.

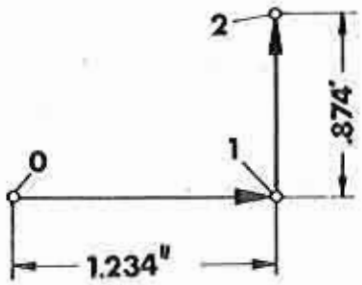

EXERCISE:

1. Move slides according to drawing from point 0 (position when switching on) to point 1 and point 2.

2. Check by pressing key [→] whether longitudinal slide (Z-direction) and cross slide (X-direction) have moved accordingly.

Inching operation

If you inch on one of the feed keys, a pulse is given to the step motor.
The pulse moves the slide by o,o138 mm.
On the read-out the figure 1 is indicated (if it has been zero before). The computer brings o,o138 mm to the nearest round figure. The rounded figures are indicated.

Steps (angle of step motors)	Traverse path (mm)	Read-out in 1/1oo mm
1. Step (5°)	o,o138	1
2. Step (1o°)	o,o277	3
3. Step (15°)	o,o416	4
4. Step (2o°)	o,o555	6
5. Step (25°)	o,o694	7
6. Step (3o°)	o,o833	8
7. Step (35°)	o,o972	1o
8. Step (4o°)	o,111	11
9. Step (45°)	o,125	12

EXERCISE:

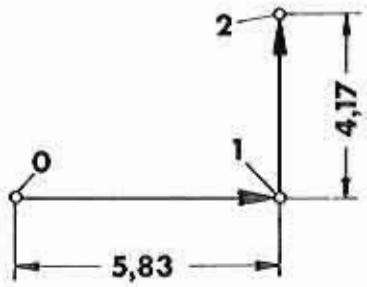

1. Move slides according to drawing from point O (position when switching on) to point 1 and point 2.

2. Check by pressing key [→] whether longitudinal slide (Z-direction) and cross slide (X-direction) have moved accordingly.

Switch over from X-traverse path indication to Z-traverse path indication (without change in the slides position)

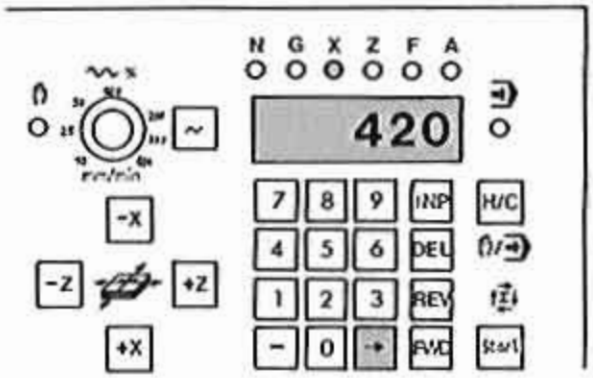

Example:

- The lamp X lights up. On the digital read-out the traverse path in X-direction is indicated.

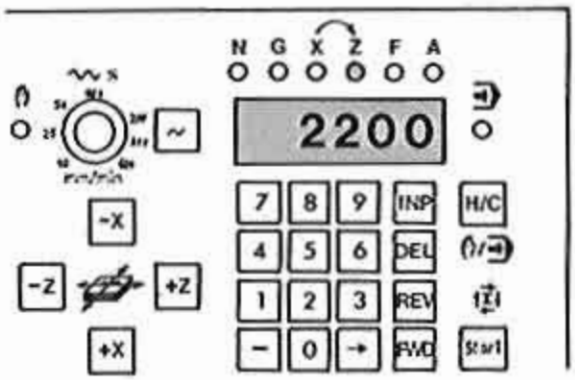

- Press key [→] . The light jumps from X to Z. The read-out shows the traverse path in Z-direction. If you press key [→] again, the indication jumps back to X.

Zero positions on digital read-out

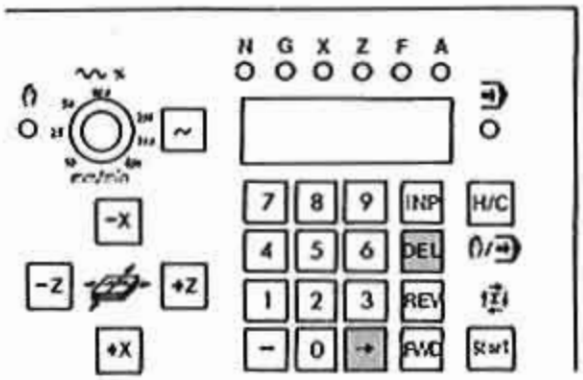

Press key [DEL]

Only the value of the indicated axis will be set at zero.
If you want to set both axis at zero, you have to change over the indication after first deleting the other axis (press key [→]) and press [DEL] again.

SUMMARY

- The zero-point is the position of the slides when machine is switched on.

- After traverse of slides the zero-point can be set anew by pressing key [DEL] in X- and Z-axis.

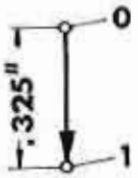

Example:

You want to traverse with the cross slide from point 0 to Point 1, i.e. .325" in X-direction. The digital read-out shall indicate value 0 at point 1.

Procedure:

1. X-lamp has to light up.
2. Press key [INP]. X-lamp blinks.
3. Put in .325" = press [3] [2] [5]
4. Press key [INP] .

If you traverse with the slide in X-direction, the digital read-out will indicate X=0 at the end of the traverse path.

Input of minus-value

First put in figures, then press key [-] .

Example:

Traverse with slides from point 0 to 1 and 2. At point 2 the read-out shall indicate 0 for X-and Z-value.

Attention:

You can put in the X-value only if X-lamp lights up, and Z-value only if Z-lamp lights up. Switching over from X to Z-value indication by pressing key [→] .

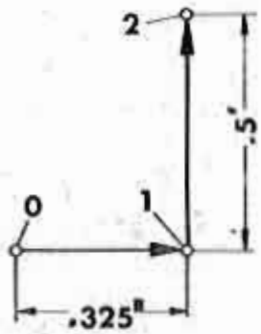

Input of a certain traverse path

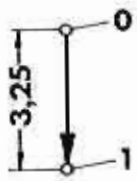

Example:

You want to traverse with the cross slide from point 0 to point 1, i.e. 3,25 mm in X-direction. The digital read-out shall indicate value 0 at point 1.

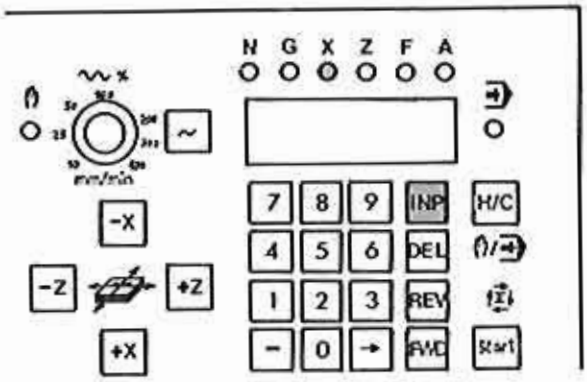

1. X-lamp has to light up.

2. Press key [INP]. X-lamp lights.

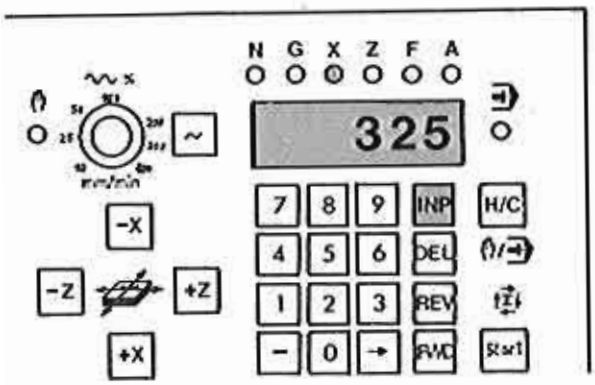

3. Put in 3,25 = press [3][2][5]

4. Press key [INP].

If you traverse with the slide in X-direction, the digital read-out will indicate X=0 at the end of the traverse path.

Input of minus-value

First put in figures, then press key [-].

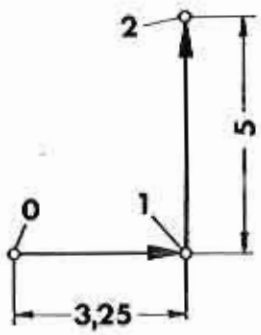

Example:

Traverse with slides from point 0 to 1 and 2. At point 2 the read-out shall indicate 0 for X-and Z-value.

Attention:

You can put in the X-value only if X-lamp lights up, and Z-value only if Z-lamp lights up. Switching over from X to Z-value indication by pressing key [→] .

Example

Working in "hand-operation" mode

Material: Aluminium
Cutting speed: 660 feet per minute
Feed size: .002" per revolution
Max. depth of cut: .05"
Tool: right hand side tool, carbide tipped

Calculate:

1. R.P.M.
2. Feed rate
3. Bear in mind application of right hand side tool.

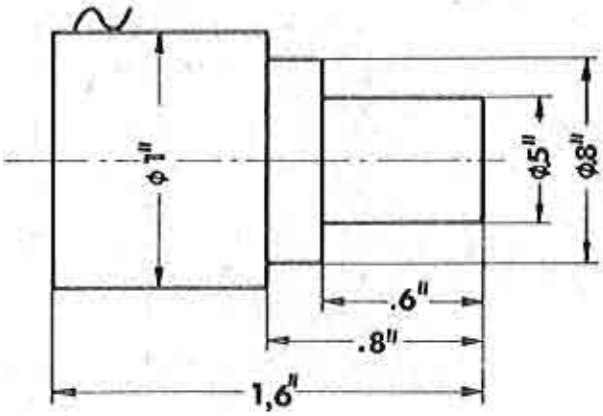

Example

Working in "hand-operation" mode

Material: aluminium
Cutting speed: 2oo mm/min
Feed size: o,o5 mm/rev.
Max. depth of cut: 1 mm
Tool: right hand side tool, carbide tipped

Calculate:

1. R.P.M.
2. Feed rate
3. Bear in mind application of right hand side tool.

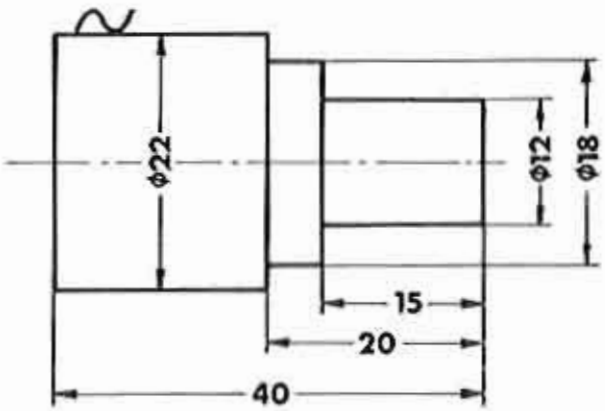

Cutting-off Power of Step Motors

When you switch on the machine, the step motors remain OFF until you have traversed with the slides - either under "hand-operation" or "CNC-operation" and will then continue to run until switched off (see below).

Step motors run hot when not in use and if they are not required for some time should be switched off.

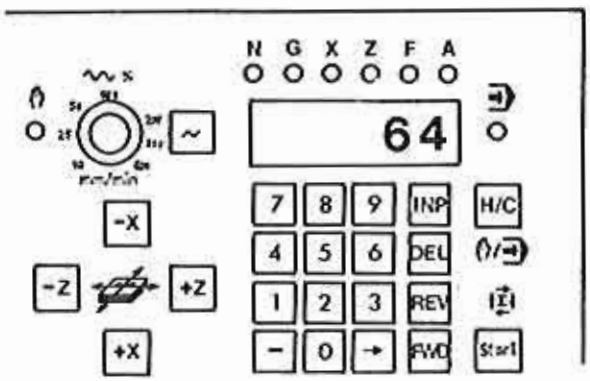

Procedure (no program stored):

1. Switch to CNC-operation: press key [H/C]
2. Press key [→] Light jumps to G
3. Put in [6][4]. Number appears on read-out.
4. Press key [INP], Step motors are switched off.

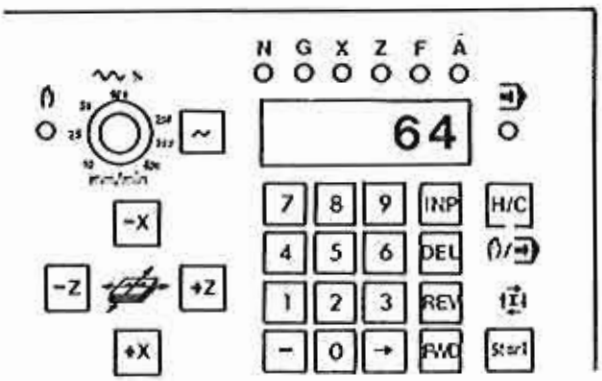

When program is stored

G64 is a pure switch function. It is not stored in the memory.

1. Press key [-] until lamp G lights up.
2. If a number appears on read-out, press key DEL.
3. Press [6][4].
4. Press key [INP], the step motors are switched off.

Scratching

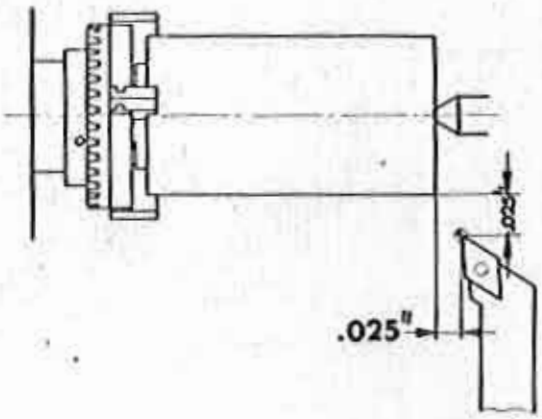

A reference / starting point for the tool bit has been chosen in the programs.
When the program starts, the tool bit must be in this position.
A very simple method is the scratching of the end- and the outside surface of the running workpiece.

Positioning the Tool for Programming Exercises (without tool pre-setting gauge)

Z-value

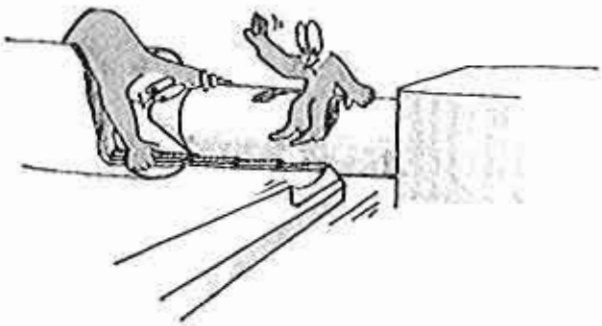

X-value

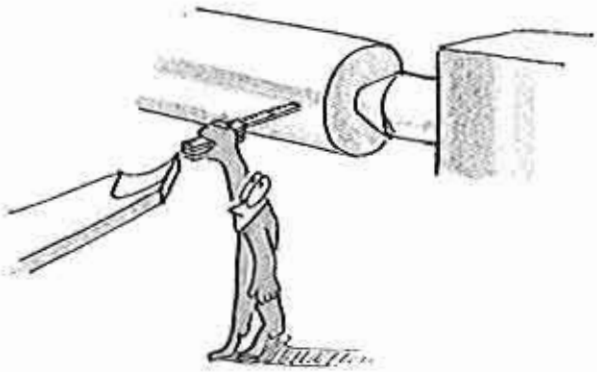

Scratching

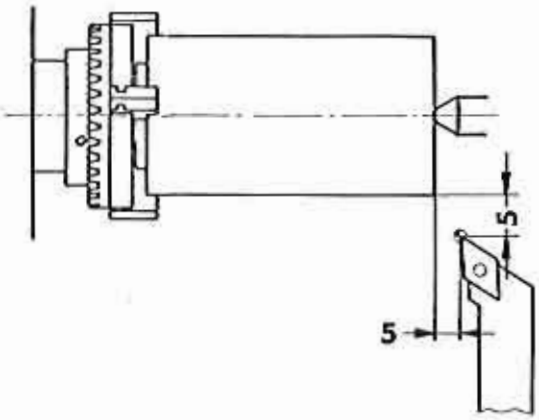

A reference / starting point for the tool bit has been chosen in the programs.
When the program starts, the tool bit must be in this position.
A very simple method is the scratching of the end- and the outside surface of the running workpiece.

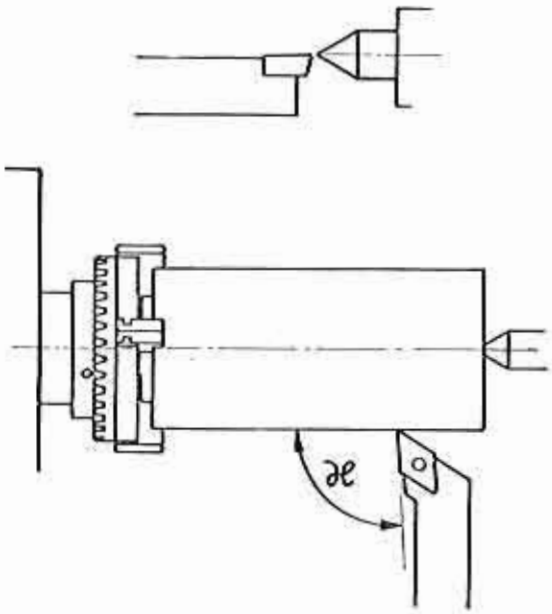

Pay attention:

1. Tool bit must be set at center height.
2. Angle ϰ must be larger than 90°, otherwise you cannot face-turn (compare right hand side tool).
3. Never move the tool bit into a stationary workpiece, because edge of tool bit may break.

When scratching, the main spindle must run.

Positioning the tool bit to program start position

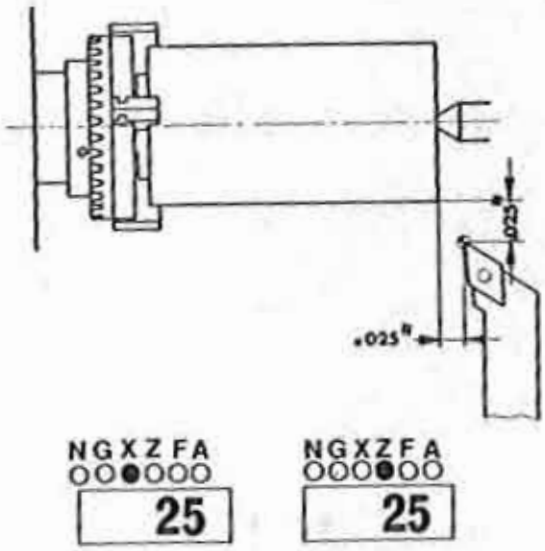

1. Move tool bit .o25" in +X-direction.
2. Move tool bit .o25" in +Z-direction.

The traversed paths are indicated in X- and Z-direction on read-out. By pressing the key the indication jumps from X to Z and vice-versa, without any traverse of the tool bit.

Positioning

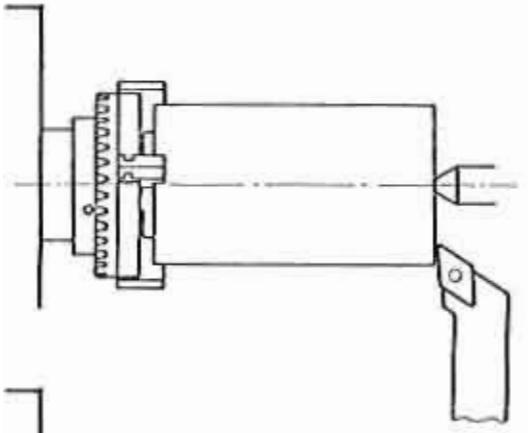

Z-value / Zero-position

1. Switch to "hand-operation", set low feed.
2. Traverse with tool bit that it scratches end of workpiece slightly (workpiece must turn).
3. Z-value indication to be set to O (press key DEL).

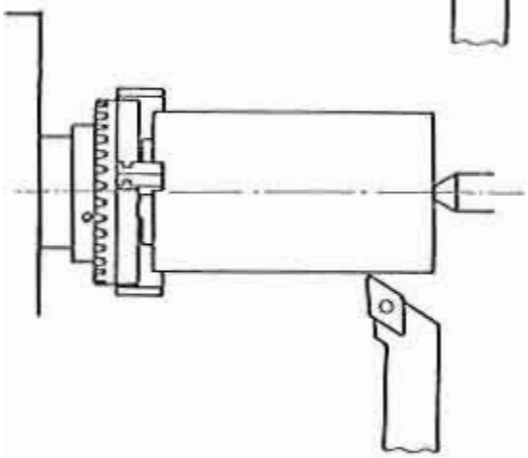

X-value / Zero-position

1. Move tool bit so that you scratch outside surface slightly.
2. Set X-indication to O (press key DEL).

Positioning the tool bit to program start position

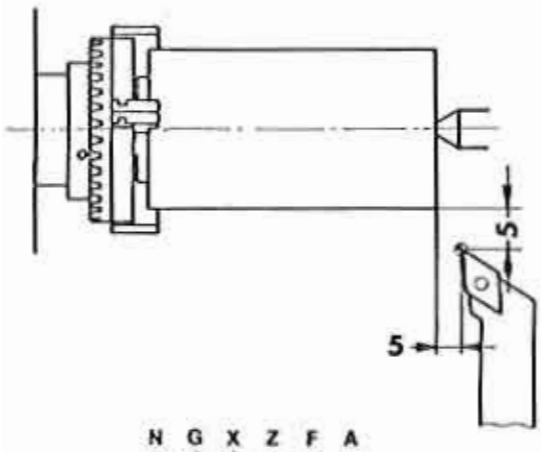

1. Move tool bit 5 mm in +X-direction.
2. Move tool bit 5 mm in +Z-direction.

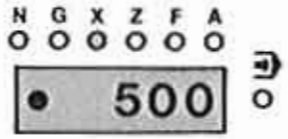

The traversed paths are indicated in X- and Z-direction on read-out. By pressing the key the indication jumps from X to Z and vice-versa, without any traverse of the tool bit.

3. CNC-Operation

Operating elements	3. 1
Summaries	3. 3 - 3. 4
Metric/Inch machine	3: 5 - 3. 6
NC-Machine	3. 7
CNC-Machine – Main elements	3. 8 - 3. 9
What happens in CNC-Manufacture?	3. 10 - 3. 13
CNC-Machine – Hand operated machine	3. 15 - 3. 17
Setting up an NC-program	3. 19 - 3. 31
Coordinate system	3. 33
Description of traverse path	3. 35
Kind of program	3. 37
Geometrical information	3. 39 - 3. 45
Feed	3. 47
Preparatory functions (G-functions)	3. 49
External structure	3. 51 - 3. 53
The format	3. 55

Operating Elements CNC-Operation (Summary)

Summary entries into program sheet and machine (inch)

1. Address N: Block numbers oo-95 (96 blocks)

2. Address G: Preparatory functions GOO/GO1/GO2/GO3.....

3. Address X: Traverse path in ± X direction.
Resolution: 1/1ooo inch without decimal point
Possible X-values: X=O to X = ± 1999 (O to 1.999")

4. Address Z: Traverse of path in ± Z direction.
Resolution: 1/1ooo inch without decimal point
Possible values: Z=O to Z = ± 19999 (O to 19,999")

5. Address F:

- Feed speed with preparatory functions GO1/GO2/GO3/G84

  Resolution: 1/1o inch per minute without decimal point.
  Possible values: 1-199 that is .1-19.9 inch per minute.

- Thread pitch with preparatory functions G33/G78

  Resolution: 1/1ooo inch per revolution without decimal point
  Possible values: 1-199 that are pitches from .oo1" to .199".

In the column "remarks" you note type of tools, cutting speed, etc., times, etc. in the column "s" the spindle speed.

Operating Elements CNC-Operation (Summary)

SUMMARY - ENTRIES INTO PROGRAMMING SHEET

Scheme

1. Address N

Block numbers 00 - 95 (96 blocks)

2. Address G

Path functions G00/G01/G02 ....

3. Address X

Traverse path (coordinate) in X-direction in hundredth of mm; 0 - ±5999
The input 5999 corresponds to 59,99 mm traverse path.

4. Address Z

Traverse path (coordinate) in Z-direction in hundredth of mm; 0 - ±39999
The input 39999 correstponds to 399,99 mm traverse path.

5. Address F

- Feed speed 0 - 499 mm/min
- Thread pitch from 1-499 (in 1/100 mm)

6. Remarks:

In this column you enter notes such as right hand side tool, boring tool, working step, etc.

Operation- and Control Elements CNC-Operation

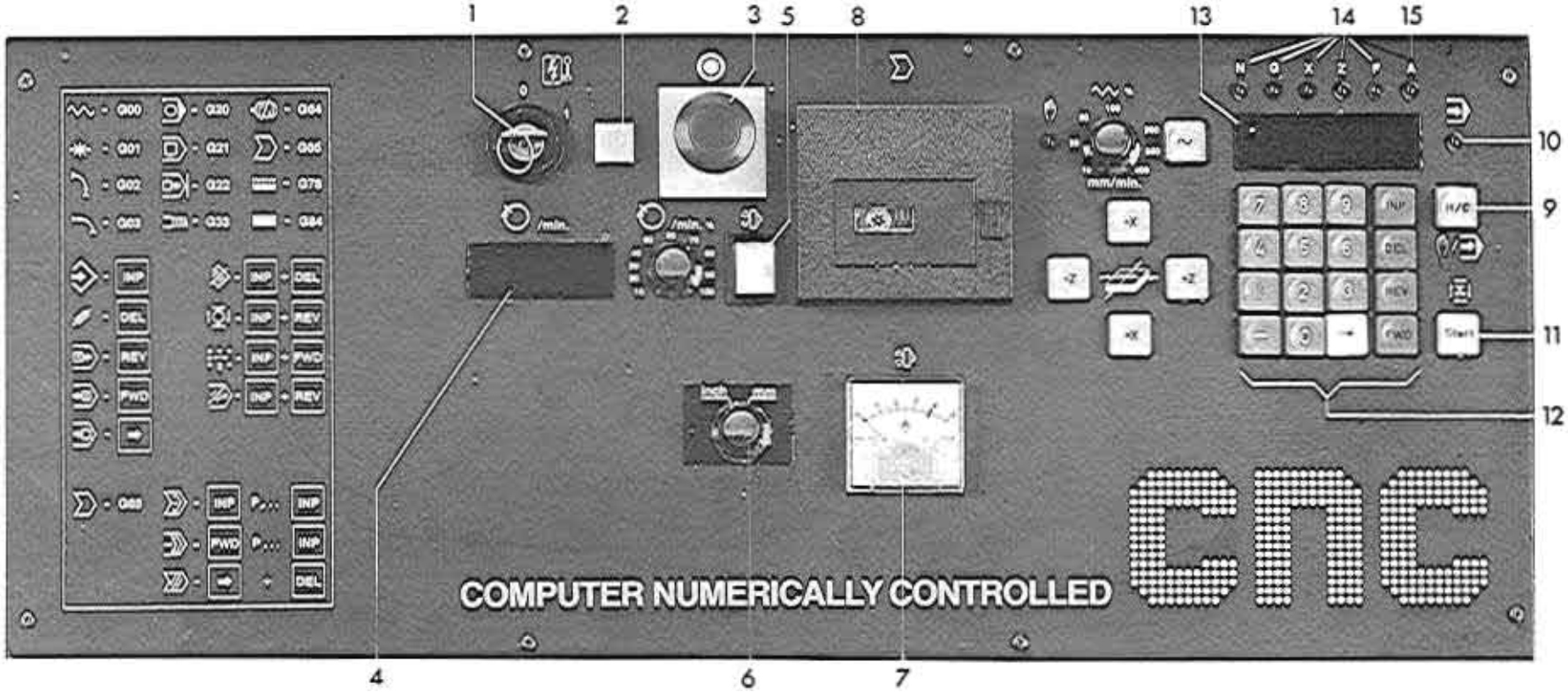

1. Main switch

Turn key to the right. Machine and control system are energized.

2. Control lamp - main switch

When main switch is on, control lamp (2) is on.

3. Emergency-stop-button

When pushing the emergency-stop-button you cut the current from the main motor, feed motors and control unit.

Disengaging emergency-stop-button:

Turn button to the left. Switch on main switch.

4. Display of main spindle speed

5. Main spindle button (on/off)

6. Switch for option between inch or metric programming (only US-machine version).

7. Ammeter for drive motor of main spindle

The ammeter indicates the actual current consumption of the drive motor. To protect the motor against overload, the current consumption must not exceed 2 Ampere at continuous operation. The load can be diminished by reducing depth of cut, feed rate or belt position. (safe range)

8. Cassette deck (accessory)

9. Switch key: hand-operation to CNC-operation

If you press the key H/C, the light jumps from control lamp hand-operation to control lamp CNC-operation. If you press again, the light jumps back.

1o. Control lamp - CNC-operation

11. Start key [START]

When operating the start key, the recorded program will start.

12. Key board for input of program, correction of program, etc.
(compare also detailed explanation)

12.1. Keys [0] to [9]
These keys serve for input of number combinations for addresses G/X/Z/F

12.2. Minus key [-]
When you press the key [-] after input of X or Z numbers, these will be recorded in thy memory as minus value.

12.3. Input key [INP]
When pressing the input key [INP], you record the value in the memory.

12.4. Delete key [DEL]

12.5. Reverse key [REV]
The display signal will jump back block by block, when operating [REV].

12.6. Forward key [FWD]
The display signal will jump forward block by block (NOO - NO1- NO2 etc.).

12.7. The [→] key
When operating the [→] key, the display signal will jump forward word by word. The recorded values will be shown.
N → G → X → Z → F

13. The display

Indicating the number values of the relative words and the various alarm codes.

14. Indication lamp for addresses

N / G / X / Z / F

15. Alarm lamp

16. Belt pulley drive

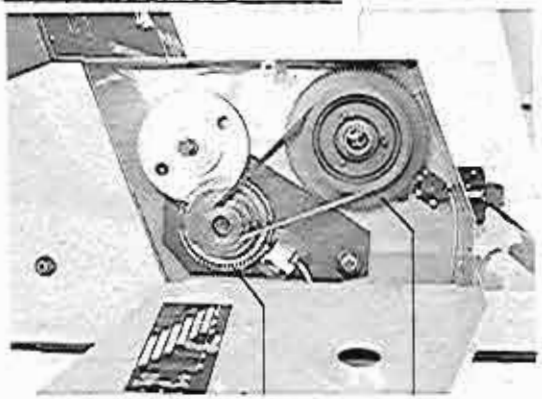

17. Perforated disc with impulse generator

To synchronize main spindle drive and feed drives; besides that for display of spindle speeds.

18. Perforated disc with impulse generator

To control load of drive motor of main spindle.

See also page 1.1, chapter: Load control of motor.

2. TAPE OPERATION

A08 Tape end with SAVE

A09 Program not found; no G22 programmed on tape

A10 Writing protection active

A11 Loading mistake

A12 Checking mistake

3. ONLY WITH METRIC/INCH TYPE MACHINE

A13 Inch/Millimeter change over with full program memory

A14 Wrong path dimension for loaded program

Inputs

Plus-Minus inputs of X,Z-values

Plus inputs: Figures to be put in without sign
Minus inputs: after input of figures press key [-].

Input of figures

Operation

Program hold

Press key [INP] + [FWD]

Program interruption

Press key [INP] + [REV]

Delete program

First press [DEL] then [INP]
Block number must be indicated.

Delete alarm

Press key [INP] + [REV]

Correction of input

Press key [DEL], put in correct value, press key [INP].

Cassette tape operation

See chapter 7

The system of axes

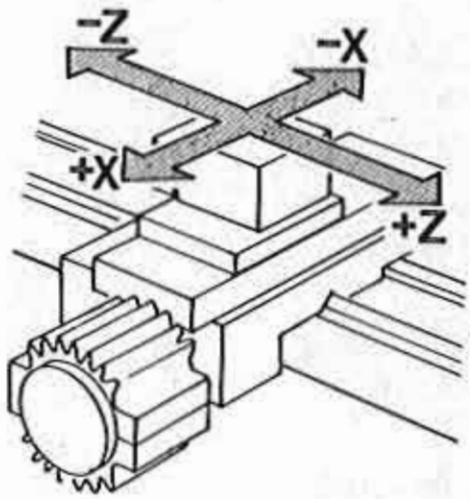

Summary

Path functions – Block formats

G00 Positioning with rapid traverse

X-axis:
N../G00/X±..../

Z-axis:
N../G00/X=0/Z=±...../

G01 Linear Interpolation

X-axis:
N../G01/X±..../Z=0/F...

Z-axis:
N../G01/X=0/Z±...../F

Taper:
N../G01/X±..../Z±...../F...

G02 Circular interpolation (clockwise)

N../G02/X±.... /F...

G03 Circular interpolation (counter-clockwise)

N../G03/X±.... /F...

G20 Hold

N../G20

G21 Empty line

N../G21

G22 Program end

N../G22

G33 Threading

N../G33/X=0/Z±...../F...

G78 Threading cycle

N../G78/X±..../Z±...../F...

G84 Long. turning cycle (can cycle)

N../G84/X±..../Z±...../F...

G65 Magnetic tape operation

G65

G64 Step motor without power =
(does not go into memory, but is a simple switch function)

Alarm signs

1. CNC-Operation

A00 Wrong G-instruction

A01 Wrong radius input

Possible radii: /50/100/150/200/250 1950

A02 Wrong X-value

X=0 to X=± 1999 possible

A03 Wrong F-value

F1 to F499 possible

A04 Wrong Z-value

Z=0 to Z=± 19999 possible

A05 No G22-instruction programmed

A06 Main spindle speed too high for threading

A07 Wrong taper

Tapers X:Z = (1-39):(1-39) possible

Summary

Path functions – Block formats

G00 Positioning with rapid traverse

X-axis:
N../G00/X±..../

Z-axis:
N../G00/X=0/Z=±...../

G01 Linear Interpolation

X-axis:
N../G01/X±..../Z=0/F...

Z-axis:
N../G01/X=0/Z±...../F

Taper:
N../G01/X±..../Z±...../F...

G02 Circular interpolation (clockwise)

N../G02/X±.... /F...

G03 Circular interpolation (counter-clockwise)

N../G03/X±.... /F...

M00
~~G20~~ Hold

N../G20

G21 Empty line

N../G21

M30
~~G22~~ Program end

N../G22

G33 Threading

N../G33/X=0/Z±...../F...

G78 Threading cycle

N../G78/X±..../Z±...../F...

G84 Long. turning cycle (can cycle)

N../G84/X±..../Z±...../F...

G65 Magnetic tape operation

G65

G64 Step motor without power =
(does not go into memory, but is a simple switch function)

Alarm signs

1. CNC-Operation

A00 Wrong G-instruction

A01 Wrong radius input

Possible radii: 25/50/100/150/200/ 5900

A02 Wrong X-value

X=0 to X= ±5900 possible

A03 Wrong F-value

F1 to F499 possible

A04 Wrong Z-value

Z=0 to Z= ±39999 possible

A05 No G22-instruction programmed

A06 Main spindle speed too high for threading

A07 Wrong taper

Tapers X:Z = (1-39):(1-39) possible

2. TAPE OPERATION

A08 Tape end with SAVE

A09 Program not found; no G22 programmed on tape

A10 Writing protection active

A11 Loading mistake

A12 Checking mistake

3. ONLY WITH METRIC/INCH TYPE MACHINE

A13 Inch/Millimeter change over with full program memory

A14 Wrong path dimension for loaded program

Inputs

Plus-Minus inputs of X,Z-values

Plus inputs: Figures to be put in without sign
Minus imputs: after input of figures press key [-].

Input of figures

X,Z values in hundredth of mm
F-values in mm/min
Thread pitches in hundredth of mm.

Operation

See chapter 7

The system of axes

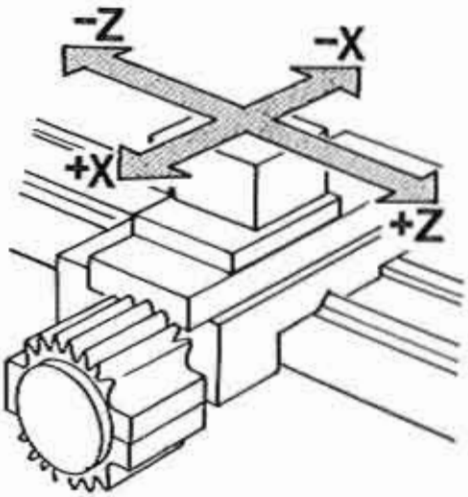

Further technical data

Rapid traverse feed: 2,75 inch/min

Feed "hand-operation": o,4- 16 inch/min

Conversion for inch feeds "hand-operation:

mm/min	Inch/min
1o	o,4
25	1
5o	2
1oo	4
2oo	8
3oo	12
4oo	16

Alarm A14

Only with tape operation, mode of operation LOAD.

You find a code on the tape indicating whether the stored data are in metric or inch.

Example:

- Program is metric
- You load program from tape to memory.
- At the end of the load operation it is checked: is selection knob metric/inch or metric?
- If not, alarm A14 appears.

Remedy:

Switch over selection knob to metric, alarm sign disappears.

Calculation of actual traverse paths:

Metric traverse path:

$$\frac{\text{Number of steps}}{72} = \text{traverse path in mm}$$

Inch traverse path:

$$\frac{\text{Number of steps}}{72} : 25{,}4 = \text{Traverse path in inch}$$

Steps (angle of step motor)	Traverse path in inch	Indication/read-out in 1/1ooo inch
1. path (5°)	o,ooo546	1
2. path (1o°)	o,oo1o9	1
3. path (15°)	o,oo164	2
4. path (2o°)	o,oo218	2
5. path (25°)	o,oo273	3
6. path (3o°)	o,oo328	3
. . .	. . .	. . .

The Metric/Inch Machine-Version

You turn the knob to switch over from metric to inch data input.

Condition:

The machine memory must be empty, when switching over, this is valid for "hand operation" or "CNC-operation". Otherwise alarm A13 is indicated.

Measures:

1. Press [INP] + [REV], alarm sign disappears
2. Delete inch or metric program

Input for inch operation

1. Input of X- and Z-values:

in o,ooi inch. The values are put in without decimal point.

Example:

X-value = o,134"
Input: 134

2. Input of thread pitches:

Pitch in thousandth of a inch (1/1ooo).

Example:

Thread with 2o tpi
1 inch : 2o = o,o5
Pitch P is therefore o,o5"
Input: 5o

3. Input of feed:

Feed = 1,2 inch/min
Input F = 12

Maximum input sizes

X-values:

X=O to X= ± 1999 (1/1ooo inch)
Otherwise alarm AO2

Z-values:

Z=O to Z= ±19999
Otherwise alarm AO4

Feeds:

F=1 to F=199 (in 1/1o inch per minute); otherwise alarm AO3

Radii:

5o,1oo,15o,2oo . 195o (1/1ooo inch); otherwise alarm AO1

The Metric/Inch Machine-Version

You turn the knob to switch over from metric to inch data input.

Condition:

The machine memory must be empty, when switching over, this is valid for "hand operation" or "CNC-operation". Otherwise alarm A13 is indicated.

Measures:

1. Press [INP] + [REV], alarm sign disappears
2. Delete inch or metric program

Input for inch operation

1. Input of X- and Z-values:

in o,ooI inch. The values are put in without decimal point.

Example:

X-value = o,134"
Input: 134

2. Input of thread pitches:

Pitch in thousandth of a inch (1/1ooo).

Example:

Thread with 2o tpi
1 inch : 2o = o,o5
Pitch P is therefore o,o5"
Input: 5o

3. Input of feed:

Feed = 1,2 inch/min
Input F = 12

Maximum input sizes

X-values:

X=O to X= ±2999 (1/1ooo inch)
Otherwise alarm AO2

Z-values:

Z=O to Z= ±19999
Otherwise alarm AO4

Feeds:

F=1 to F=199 (in 1/1o inch per minute);
otherwise alarm AO3

Radii:

5o,1oo,15o,2oo ... 295o (1/1ooo inch);
otherwise alarm AO1

Further technical data

Rapid traverse feed: 2,75 inch/min

Feed "hand-operation": o,4-1,6 inch/min

Conversion for inch feeds "hand-operation:

mm/min	Inch/min
1o	o,4
25	1
5o	2
1oo	4
2oo	8
3oo	12
4oo	16

Alarm A14

Only with tape operation, mode of operation LOAD.

You find a code on the tape indicating whether the stored data are in metric or inch.

Example:

- Program is metric
- You load program from tape to memory.
- At the end of the load operation it is checked: is selection knob metric/inch or metric?
- If not, alarm A14 appears.

Remedy:

Switch over selection knob to metric, alarm sign disappears.

Calculation of actual traverse paths:

Metric traverse path:

$$\frac{\text{Number of steps}}{72} = \text{traverse path in mm}$$

Inch traverse path:

$$\frac{\text{Number of steps}}{72} : 25{,}4 = \text{Traverse path in inch}$$

Steps (angle of step motor)	Traverse path in inch	Indication/read-out in 1/1ooo inch
1. path (5°)	o,ooo546	1
2. path (1o°)	o,oo1o9	1
3. path (15°)	o,oo164	2
4. path (2o°)	o,oo218	2
5. path (25°)	o,oo273	3
6. path (3o°)	o,oo328	3
. . .	. . .	. . .

What is a CNC-Machine?

- A machine which we feed with figures and letters
  = DATA INPUT

- A machine which "understands" the data, which processes it and calculates
  = DATA PROCESSING

- A machine which passes on this data and calculated values in form of instructions
  = EXECUTION

NC-MACHINE

CNC

Computer-numerically controlled

DNC

Specialists

Direct numerically controlled (direct electronic input of program via cable)

AC

Adaptive control (control system adapts itself to changed working conditions)

Meanings in daily use

These meanings change quite often in their daily use. NC-machines were originally machines with numerical control, but no microprocessor. Today such machines are obsolete. The program was read in directly from the perforated tape.

Today NC-machines comprise all types CNC, DNC or AC types.

CNC — Machine — Main Elements — A "humanized" Comparsion

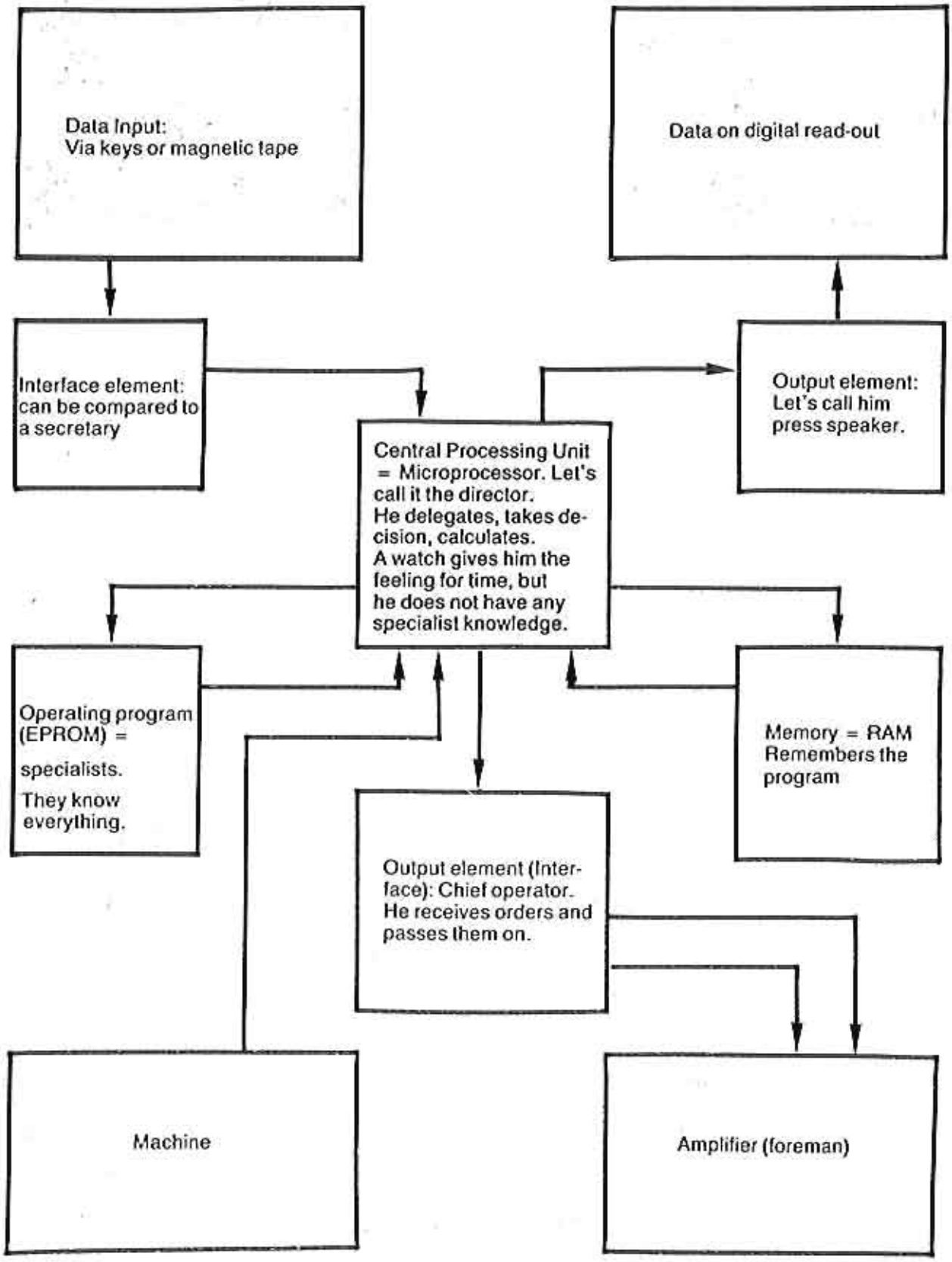

CNC-Machine – Main Elements

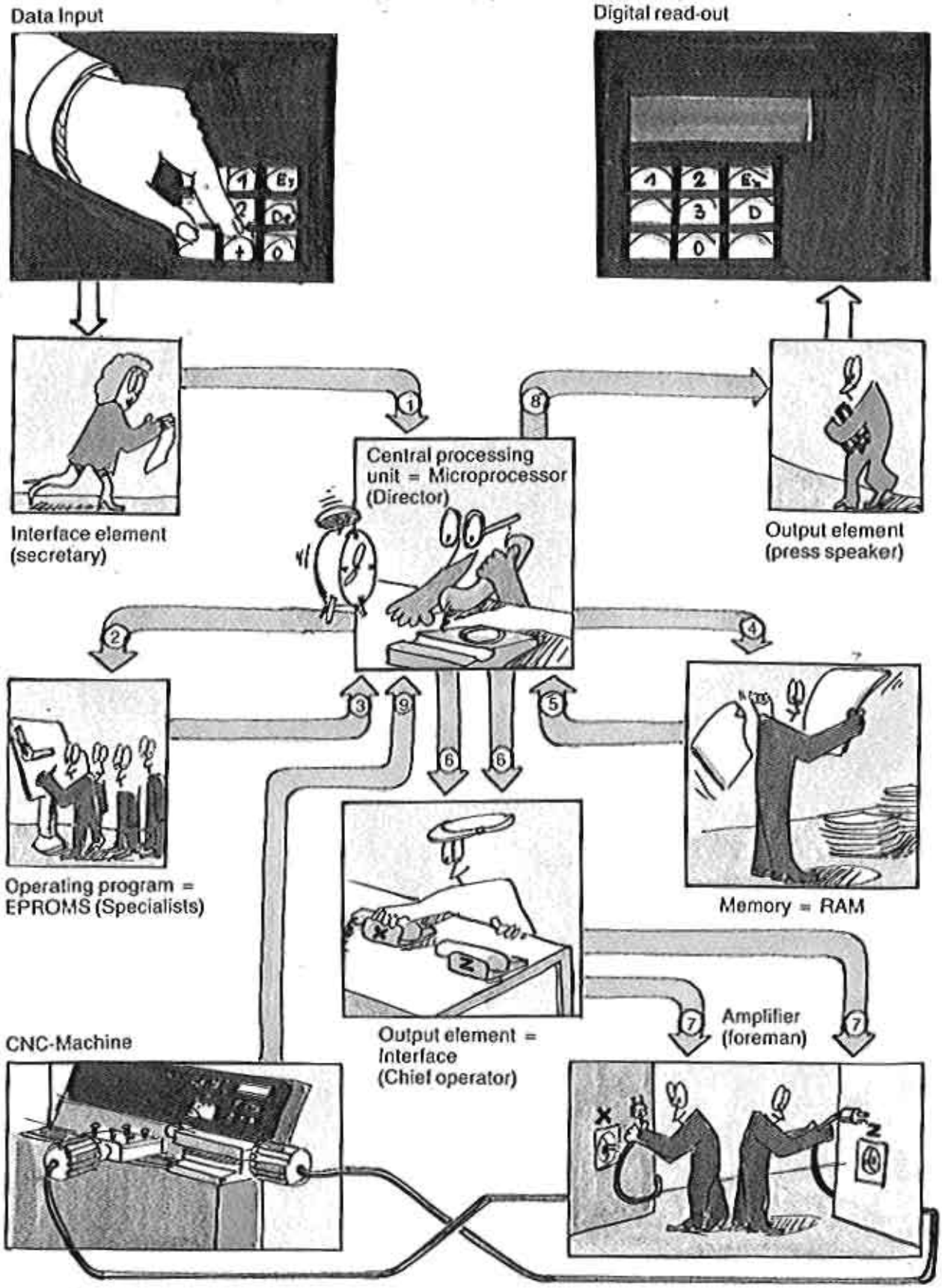

What happens in CNC-Manufacture?

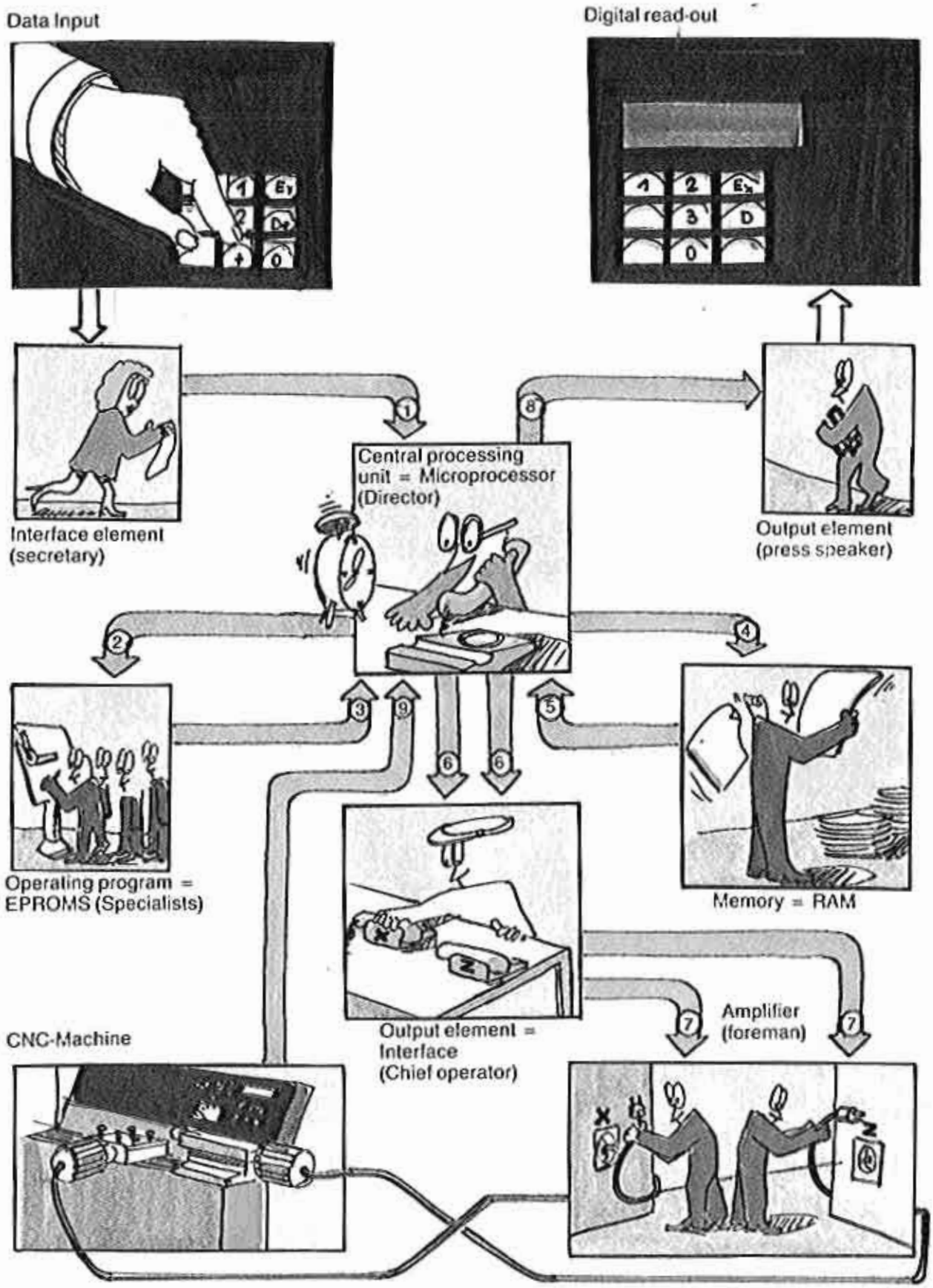

What happens in CNC-Manufacture?

What knowledge is necessary in order to manufacture, using a hand operated or a CNC lathe?

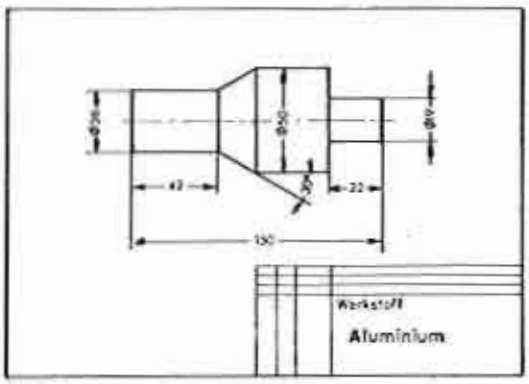

Hand operated machine

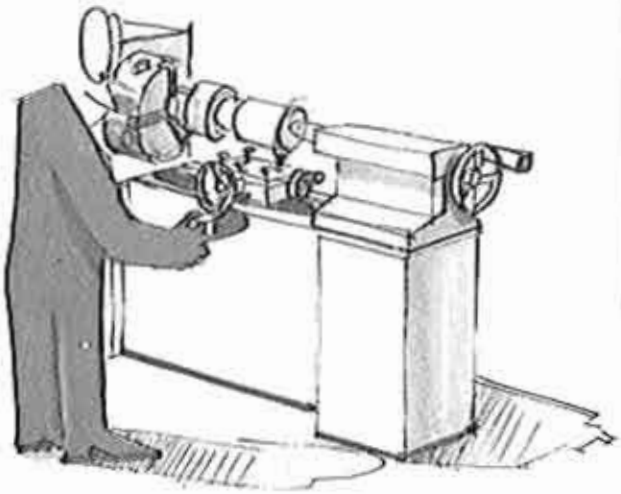

NC-machine

Differences in Manufacture using a hand-operated or a CNC-Machine

(Summary)

Hand operated machine		CNC-machine
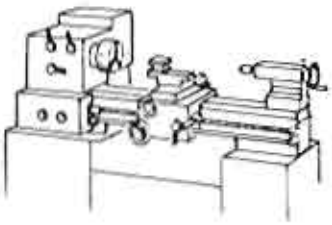	**Necessary information**	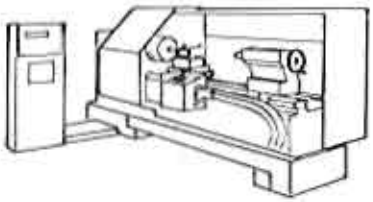
✓	Technical drawing 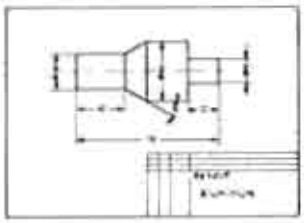	✓

Necessary means

✓	Lathe	✓
✓	Chucking devices (chuck, center, etc.)	✓
✓	Turning tool	✓

(to execute operation)

✓	Reading of technical drawing	✓
✓	Knowledge about characteristics of turning tools Roughing tool Copying tool Side tool etc. 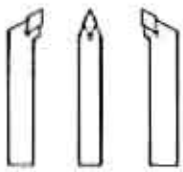	✓

Differences in manufacture, using a Hand operated or a CNC-machine – Continued

Hand operated machine	Technological information	CNC-machine
	+ Cutting speed depending on - material of workpiece - tool (HSS, carbide tipped) - turning operation such as roughing, finishing, screw cutting	
	+ Feed rate	
	+ Cutting depth	
	+ Performance and dimensions of machine	

Execution

Operator must know how to control the machine

+ Writing the NC-program

+ Input of NC-program

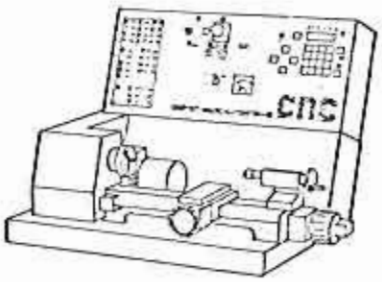

+ Preparing the machine

+ Execution

Setting up an NC-Program

Scheme

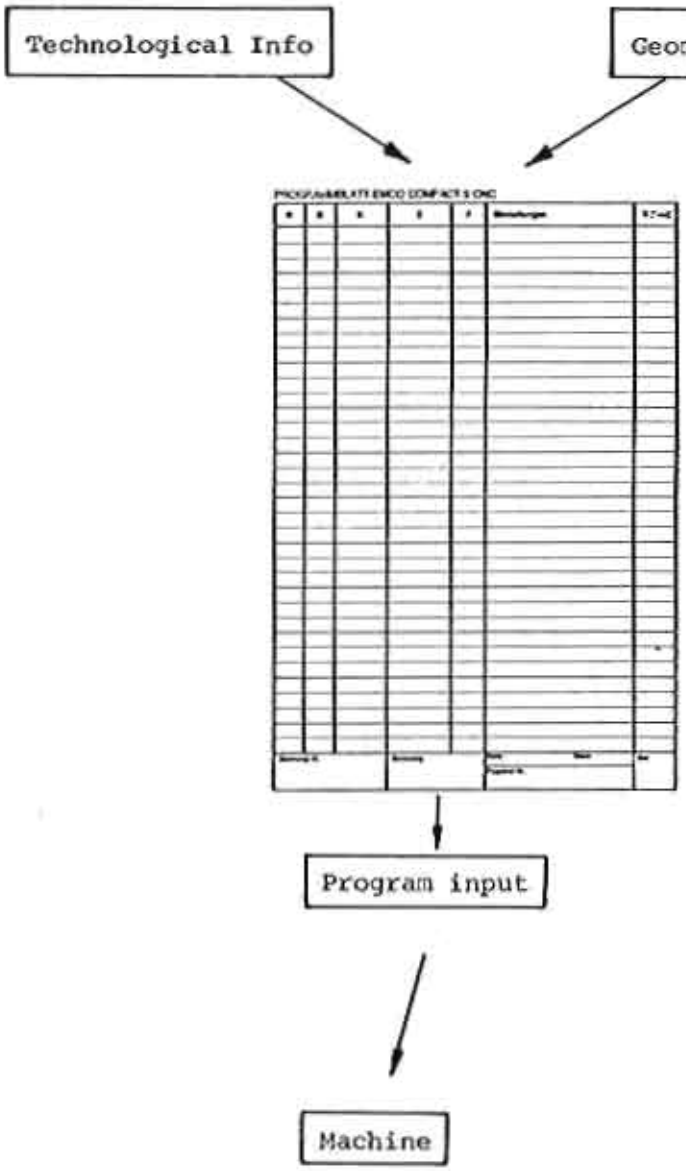

Setting up of program

Knowledge is necessary concerning machine and system of control

Program input

Operator must be aware of different input possibilities (input directly on machine, input via perforated tape, via magnetic tape, etc.)

What is Programming?

Programming means to feed the computer with such data which it understands.

In other words, we have to "spoon-feed" the computer, list the data in orderly sequence and in a language which is familiar to the computer, which it understands", so it can process the information.

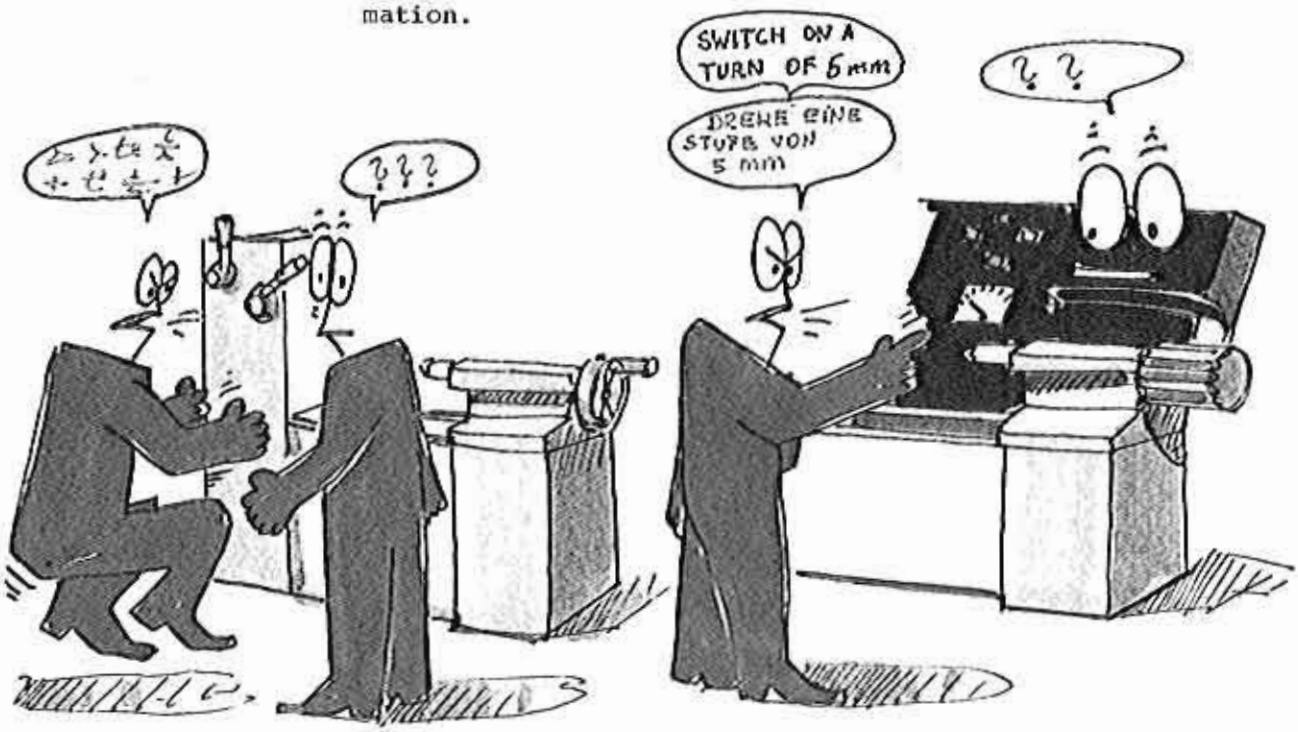

The operator does not understand the Chinese commands, because he does not speak this language.

The CNC-machine does not understand the human language.

We have to feed the CNC-machine with data in a language it will understand. This language is "encoded".

WITH WHICH INFORMATION DO WE HAVE TO FEED THE COMPUTER?

Basically the same information, which we would have to give to someone, who has to manufacture a workpiece on a hand-operated machine tool, but who does not know turning.

In other words: you have to give turning instructions to someone. But this someone on the machine does not know anything about turning and just follows blindly your instructions.

You know how to do it?

Why not try: Write the instructions down, or give them directly to a man on the machine.

Example:

The man on the machine has to turn a shoulder. Tool bit position as indicated in the left hand drawing.

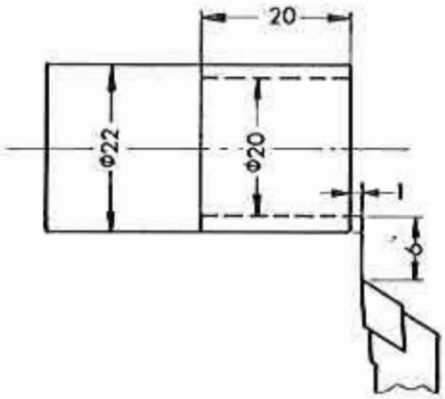

Material:

Aluminium

Machine performance like Compact 5 CNC. The turning operation should be done as economically as possible. The main spindle is already running.

Another example:

Try to give instructions to someone to drive the car out of the garage, who does not know how to drive a car. Your partner is only allowed to follow your instructions blindly.

PS: Your car will hardly reach the street without a bump, because you will most probably give unclear instructions and these maybe in a misleading sequence ...

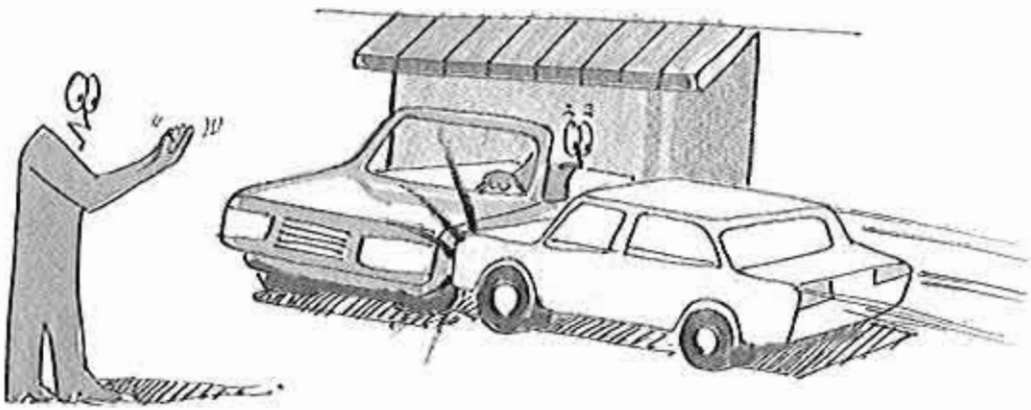

Determination of program

A talk between a programming specialist and an operator could run as follows: The specialist wants information how the workpiece (compare example of previous page) is being manufactured.

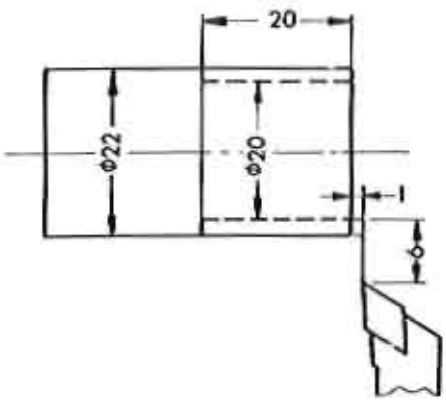

Specialist:

Please explain to me, what you do in order to manufacture this workpiece? I see that the tool bit is mounted and the main spindle is running.

Operator:

I move the cross slide by 6 mm.

Specialist:

In which direction? You can move it towards you or away from you.

Operator:

I move it away from me.

Specialist:

Do you have to do this at a certain speed?

Operator:

No, but the quicker I do it, the more economical it will be. But I still must be able to read the scale on the handwheel.

Specialist:

May I sum up?
You move
- the cross slide
- by 6 mm
- away from you
- speed can be such, that you still can read the handwheel scale.

Operator:

Next operation: I move the longitudinal slide by 21 mm.

Specialist:

In which direction?

Operator:

Towards the headstock.

Specialist:

Do you move at a certain speed?

Operator:

Yes. This feed is selected by myself. It depends on the raw material, the material of the tool bit, the surface of the workpiece to be achieved and on a few other factors.

Specialist:

I sum up:
You move
- the longitudinal slide
- by 21 mm
- in direction headstock
- at a certain feed rate

Thank you Mr. Operator, I shall take everything into account!

Brain storming of the specialists, program structure

There are many different operations on a machine tool. How do I define longitudinal or cross turning or screw-cutting? Often I repeat certain slide movements in cycles; I need a code-word or a code-number. For example I take the letter G and add a figure.

For the instructions on longitudinal and cross slide movements I take the

"Kartes-Coordinates-System, right hand turning.

Z = longitudinal slide
X = Cross slide
The directions are indicated with ± sign.

Length measurements:

Absolute or incremental?
Which input fineness?
0,1 mm, 0,01 mm or 0,001 mm?

What else do I have to program?

Feed: I take the code-letter F

Spindle speed: Code-letter S

etc.

This is all put together in a list.

The determining of a program structure was of course a work of years, a work of many specialists. The following pages will bring details on the program structure valid for all machine tools which is standardized according DIN 66025.

The coordinate system on NC-machines

The information "move longitudinal slide in direction headstock" is a very long one. Besides that, in each language it would be different. That's why the traverse path movements with machine tools are described within the coordinate system.

Coordinate system on lathes

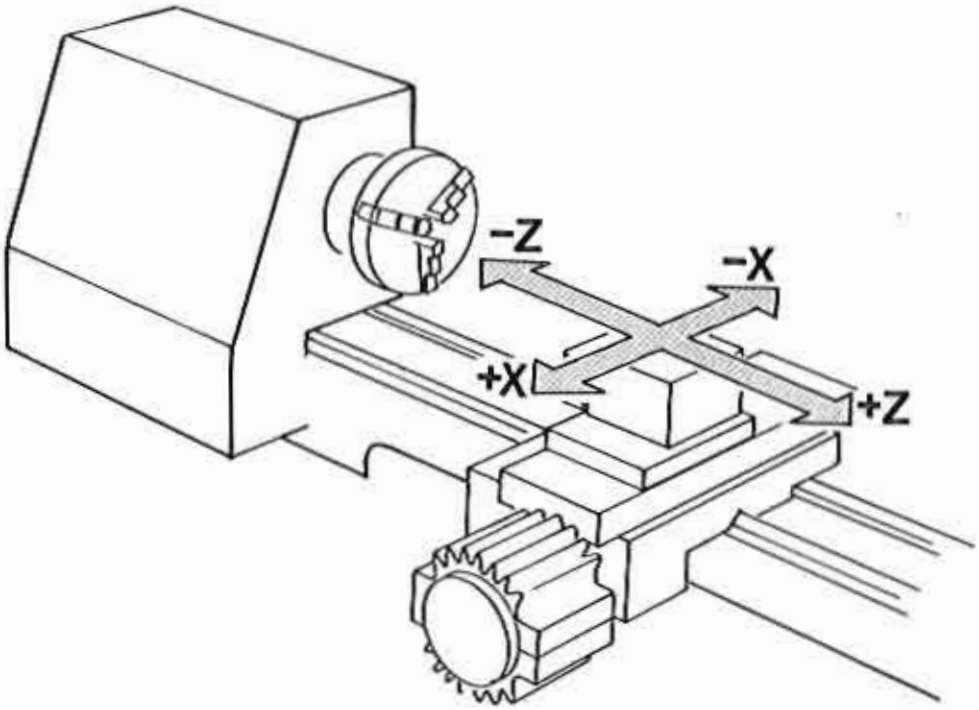

Z-axis = Axis parallel to the turning axis

X-axis = Axis rectangular to the turning axis

-Z movement = movement of longitudinal slide in direction of headstock

+Z movement = movement of longitudinal slide away from headstock

-X movement = see drawing

+X movement = see drawing

The coordinate system

The description of traverse path

Do you remember the summary of the specialist?

You move
- the longitudinal slide
- in direction headstock
- by 21 mm
- at a certain feed rate

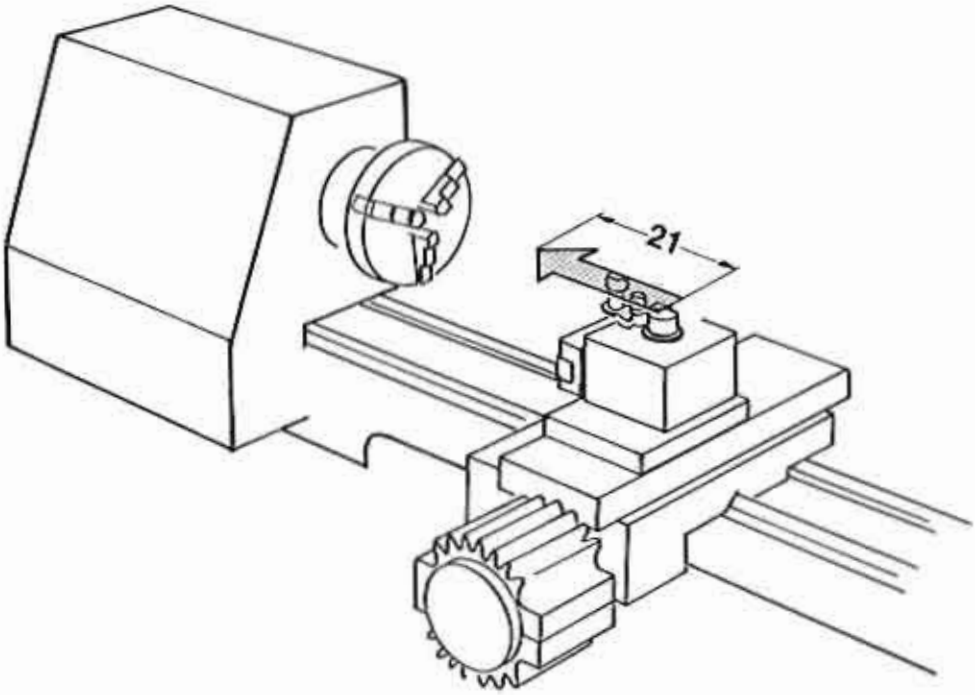

With the help of the coordinate system we can say it simpler:

Verbal instruction:	CNC-instruction:
- Move longitudinal slide	= to move in Z-direction
- Move longitudinal slide in direction of headstock	= to move in -Z direction
- Move longitudinal slide by 21 mm in direction of headstock	= to move in -Z direction by 21 mm. The CNC-instruction is Z-21 mm.

Concept of Programming – Methods of Programming

Basically there are two methods to describe the path: absolute or incremental.

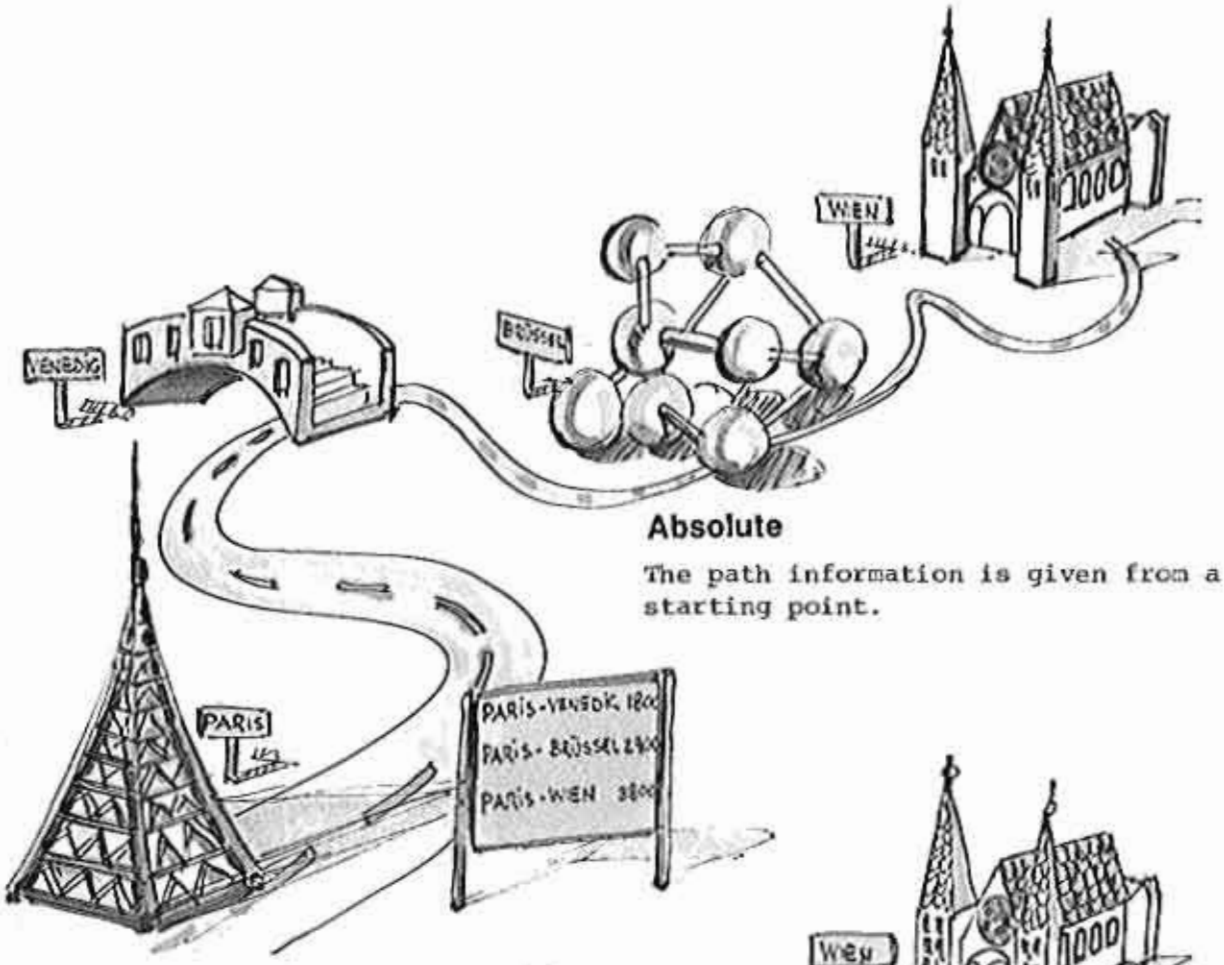

Absolute

The path information is given from a starting point.

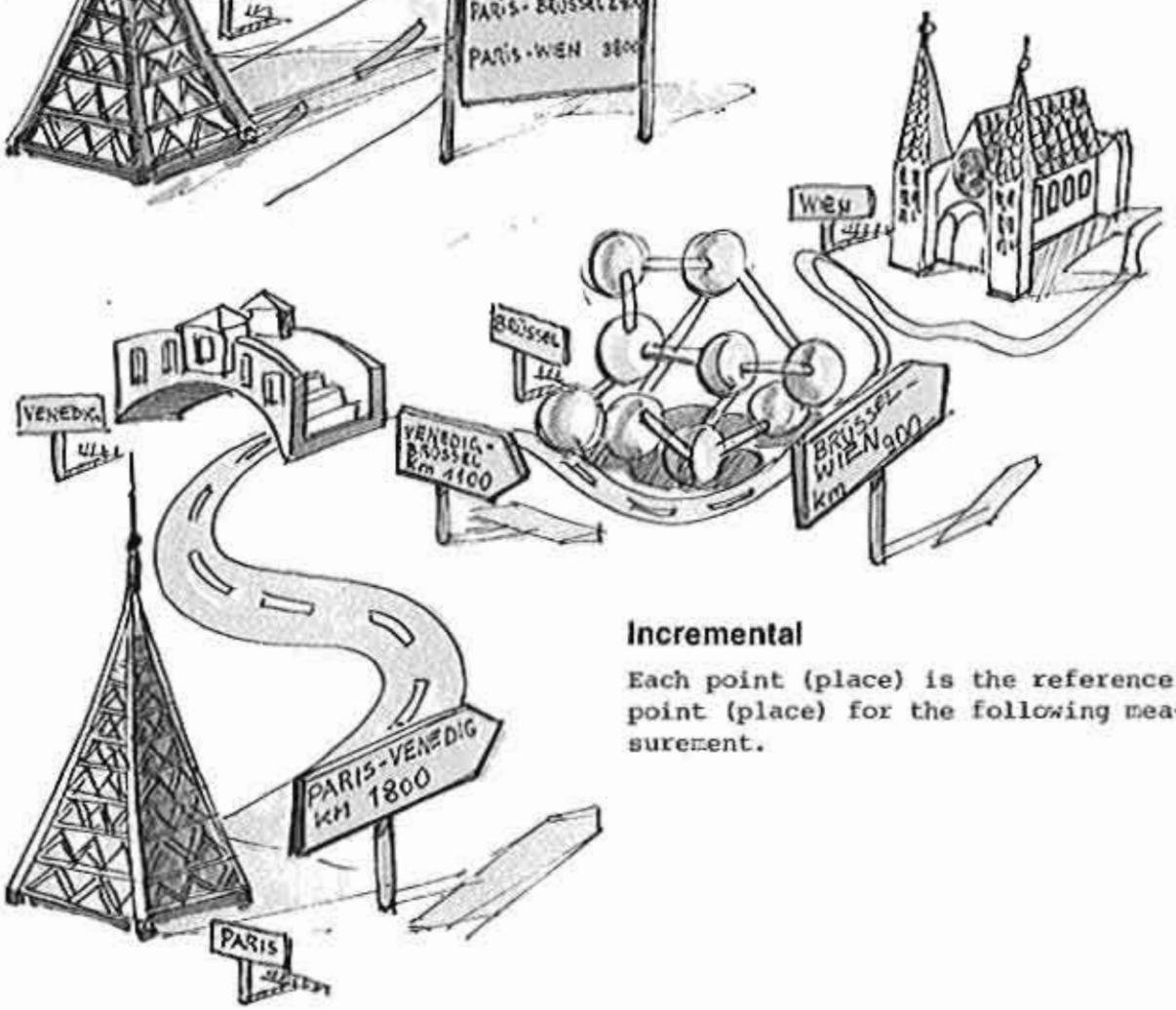

Incremental

Each point (place) is the reference point (place) for the following measurement.

E IMPORTANCE OF NC-MACHINES - NC-TRAINING

Development of NC-machines

Mr. John Pearson and the M.I.T. (Massachusetts Institute of Technology) developed 1952 on behalf of the US-Air-Force the first numerically-controlled machine tool for the production of particularly complicated workpieces. Due to the high costs and the voluminous size of the control unit and because of the complicated operation and maintenance, one could hardly imagine that this technology could be used on a broad basis. But the first step was made and this control type was further developed.

Some 15 years ago NC-machines were extremely costly and only very few companies had the courage and the conviction to invest in this new technology.

From 1975 on, the production of NC-machines grew enormously. The main reason for the sudden increase was certainly the development of the microprocessors. The use of NC-machines in this way was first attractive to large, medium and small manufacturing companies. Today the cost of, for example, a control unit with a much larger capacity will only cost a twenty-fifth as much as compared to 1968. The initial mistrust as to the reliability of electrical control has meanwhile disappeared; the machine break-downs caused by defective controls are below one percent.

Future of NC-machines

Lower purchase prices, higher cutting capacity, precision, speed, longer life, easy programming will further increase the number of NC-machines: experts estimate that the number will quintuple until 199o.

Why NC-training?

In nearly all manufacturing companies there is high demand for NC-trained personnel and this demand will sharply increase in the future. Therefore training is of utmost impor-

Geometrical Information

The geometrical information is in the technical drawing.

Lettering of drawing

Can be done according to the incremental or to the absolute system. In many cases you find a combination of these two systems: incremental and absolute.

Absolute system

There is one point of reference.

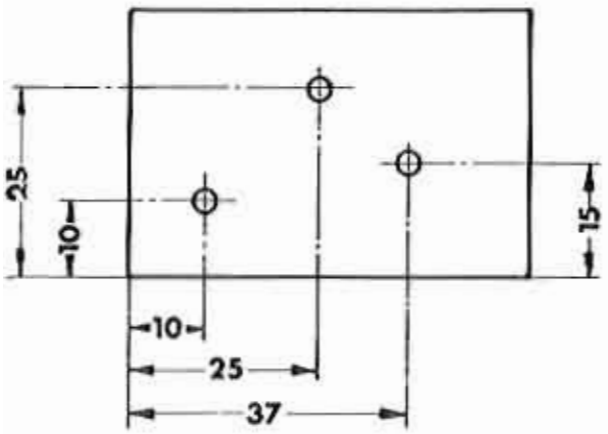

Incremental system

Each measurement is based on the previous one.

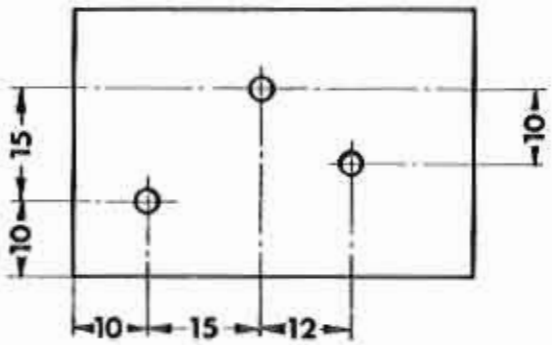

Combined system

The measurements 1 and 2 are absolute ones, i.e. based on one point of reference. The measurements 3 and 4 are incremental ones.

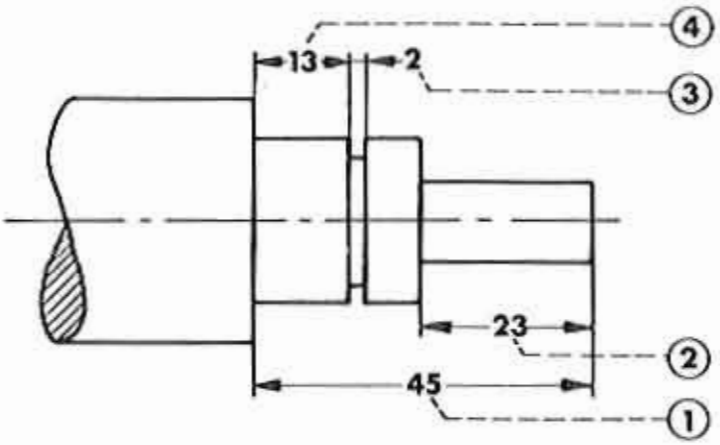

Methods of Programming

In the program you have describe in each block the path of the turning tool. Basically there are two methods to describe this path.

Absolute system

The path information given to the turning tools is always calculated from a definite starting point.

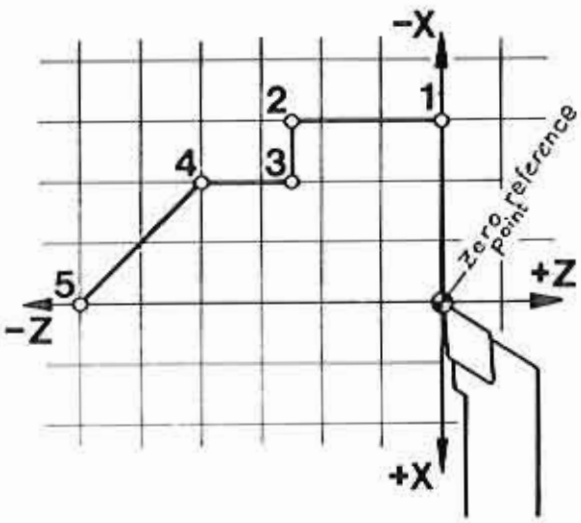

X	Z
-3	0
-3	-2,5
-2	-2,5
-2	-4
0	-6

Incremental system

Here the position of the turning tool is given as its distance from the preceding final position. The zero reference point for each path information is the actual position of the tool bit.

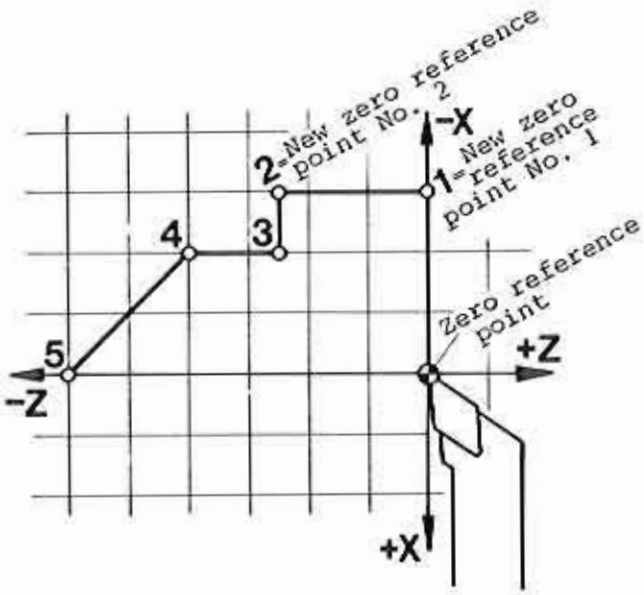

X	Z
-3	0
0	-2,5
1	0
0	-1,5
2	-2

Exercises

The absolute system

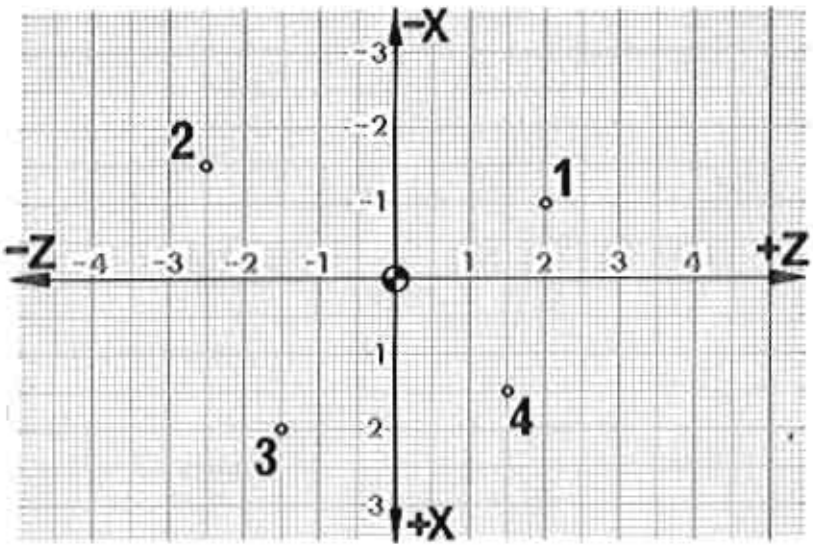

Enter the measurements for points 1,2,3,4 in the absolute system.

X	Z

The incremental system

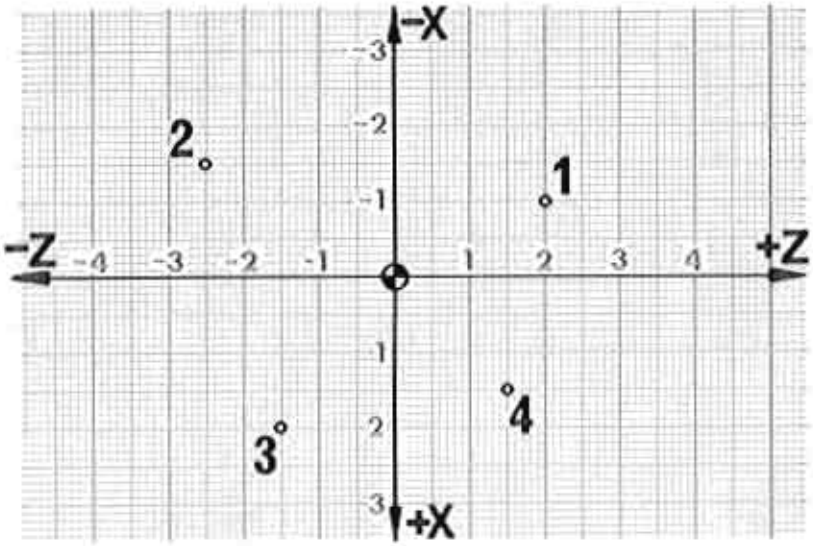

Each reference point becomes a new zero reference point. Put the transparent paper sheet (coordinates marked) onto the drawing and move it from reference point 0 to reference point 1, etc.

X	Z

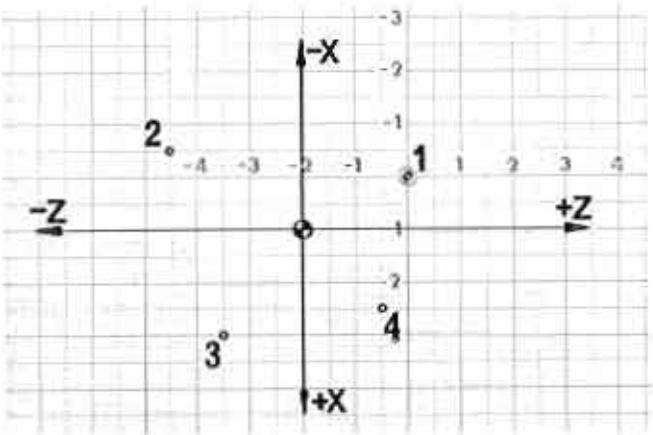

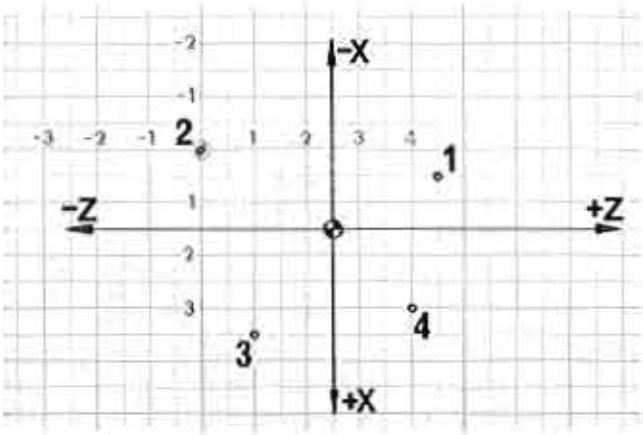

Advantages – Disadvantages

The COMPACT 5 CNC is programmed in the incremental system!

It is useful to enter into the technical drawing auxiliary dimensions, so you avoid calculation work during the programming itself.

Absolute system

Advantage:

If you have to change the position of point 1, all other points still remain unchanged.

Disadvantage:

In some cases more difficult

Incremental system

Advantage:

This system is in many cases simpler.

Disadvantage:

If you have to change one point, all following ones will have to be changed as well.

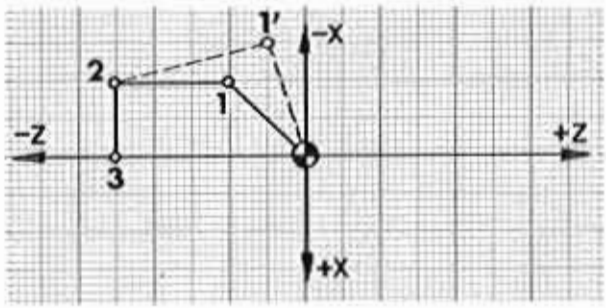

Point 1 has to be changed to point 1'. The description for points 2 and 3 remains unchanged.

X	Z
-1	-1
-1	-2,5
0	-2,5

X	Z
-1,5	-0,5
-1	-2,5
0	-2,5

Since point 1 was changed, also the description for points 2 and 2 changes.

X	Z
-1	-1
0	-1,5
1	0

X	Z
-1,5	-0,5
0,5	-2
1	0

The feed (F)

For the feed size or feed speed the letter F is used.

1. Feed Size (F_1)

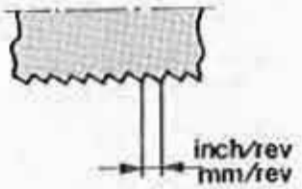

1. Feed size: inch

Is indicated in inch per main spindle revolution

F_1 = inch/rev.

Metric

Is indicated in mm per main spindle revolution

F_1 = mm/rev.

2. Feed Speed (F_2)

Inch

= Movement of toolbit (in inch) per minute. L = Path in inch

$$F_2 = \frac{L}{min} \quad \left[\frac{Inch}{min.}\right]$$

Metric

= Movement of tool bit (in mm) per minute. L = Path in mm

$$F_2 = \frac{L}{min} \quad \left[\frac{mm}{min.}\right]$$

Conversions

Inch

Feed size (F_1) to feed speed (F_2)

$$F_2\left[\frac{inch}{min.}\right] = S\left[\frac{rev.}{min.}\right] \times F_1\left[\frac{inch}{rev.}\right]$$

Feed speed (F_2) to feed size (F_1) =

$$F_1\left[\frac{inch}{rev.}\right] = \frac{F_2\left[\frac{inch}{min.}\right]}{S\left[\frac{rev.}{min.}\right]}$$

S = Main spindle speed

On industrial machines you may put in the feed in mm/rev. and mm/min. On the COMPACT 5 CNC the feed is put in in mm/min.

Metric

Feed size (F_1) to feed speed (F_2)

$$F_2\left[\frac{mm}{min.}\right] = S\left[\frac{rev.}{min.}\right] \times F_1\left[\frac{mm}{rev.}\right]$$

$$F_1\left[\frac{mm}{rev.}\right] = \frac{F_2\left[\frac{mm}{inch}\right]}{S\left[\frac{rev.}{min.}\right]}$$

S = Main spindle speed

With the COMPACT 5 CNC the feed does not depend on the spindle speed, so you have to calculate the feed size or look for it in the chart.

The feed (F)

For the feed size or feed speed the letter F is used.

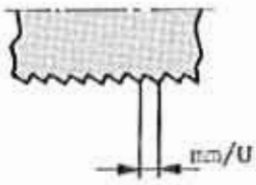

1. Feed size

Is indicated in mm/main spindle revolution .

F = mm/rev.

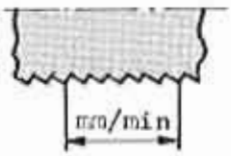

2. Feed speed

= movement of tool bit per minute

$$F = \frac{S}{min} \quad (mm/min)$$

On industrial machines you may put in the feed in mm/rev and mm/min. On the Compact 5 CNC the feed is put in in mm/min.

Conversion:

Feed speed (mm/min) = Main spindle speed (rev/min) x feed size (mm/rev)

$$F\ (mm/min) = S\ (rev/min) \times F\ (mm/rev)$$

$$\text{Feed size } (mm/rev) = \frac{\text{Feed speed } (mm/min)}{\text{Main spindle speed } (rev/min)}$$

$$F\ (mm/rev) = \frac{F\ (mm/min)}{S\ (rev/min)}$$

With the Compact 5 CNC the feed depends **not** on the spindle speed, so you have to calculate the feed size or look for it in the chart.

Preparatory functions (G-functions)

The path functions are defined according DIN 66o25 and ISO, the meaning of which will be explained in the following chapters.

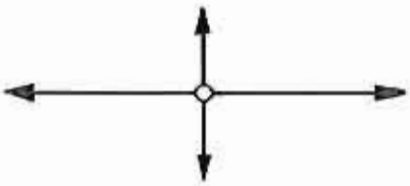

G00 Slides move only at rapid traverse speed.

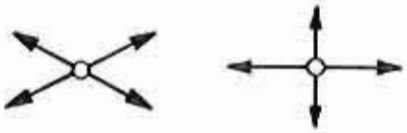

G01 Slides move at right angles and/or at programmed angles with programmed feed.

G02 Turning tool follows a quarter part of circumference in clockwise direction.

G03 Turning tool follows a quarter part of circumference in counter clockwise direction.

G20 Program stop: in order to carry out measuring jobs or tool change, etc.

G21 Hold

G22 Program end

G33 Thread cutting

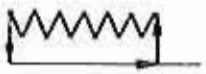

G78 Thread cutting cycle

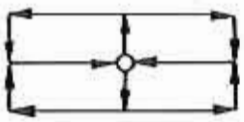

G84 Turning tool carries out fixed cycle (canned cycle).

G64 Step motors switched "off"

G65 Cassette tape operation

The CNC-Program (External Structure)

The program is written down in the program manuscript.

Program Manuscript EMCO COMPACT 5 CNC

N	G	X	Z	F	Be
00	00	-3000			
01	01	0	-2500	120	
02	01	1050	0	120	
03	01	0	-1680	120	
04	03	2000	0	120	
05					

The program manuscript

All essential data for the manufacture of a workpiece are filled in.
The composition of this program is called programming.
The structure of such a program is standardized.

Parts of the program

N	G	X	Z	F	E
00	00	-3000			
01	01	0	-2500	120	
02	01	1050	0	120	

1. The block

The program consists of blocks. A block contains all data necessary to execute an operation (i.e. order: move longitudinal slide straight on 25 mm, speed 12o mm/min).

N	G	X	Z	F
00	00	-3000		
01	01	0	-2500	120

Words

2. The words

Each block consists of various words. Each word consists of a letter and a combination of numbers, e.g. N01.

G 01

Address — Combination of numbers

3. The word

A word consists of a letter and a combination of numbers. The letter is called address.

The words of the COMPACT 5 CNC

1. Word:

Address letter N

The first column carries the block number.
You put in: 00 (first step of operation)
01 (2nd step of operation)
etc.

N	G	X	Z	F	E
00					
01					
⋮					

2. Word:

Address letter G and numbers

G is the symbol for the operation tube done. Each number means a certain movement, e.g. o1 straight line movement, o3 circular movement, etc.

N	G	X	Z	F	Bem
00	01	125			
01	03				

3. Word:

Address letter X and numbers

X means X-axis. The numbers indicate the traverse path in X-direction. The number can have "+" or "-" sign.
X +125 means .125" in plus X-direction.

N	G	X	Z	F	Bem
00	01	125	2050	100	
01	03				

4. Word:

Address letter Z and numbers

Z means Z-axis. The numbers indicate the traverse path in Z-direction. Z +2o5o means 2.o5o" in plus Z-direction.

N	G	X	Z	F	Bem
00	01	125	2050		
01	03				

5. Word:

Address letter F and numbers

F is the abbreviation of "feed". F100 means a feed of 1o inch per minute.

N	G	X	Z	F	Bem
00	01				
01	03				

On industrial CNC-machines there are further words in use.

- Speed of main spindle (address letter S)
- Tool for the relative block (address letter T)
- Supplementary miscellaneous functions (address letter M)

etc.

The words of the COMPACT 5 CNC

1. Word:

Address letter N

The first column carries the block number.
You put in: 00 (first step of operation)
01 (2nd step of operation)
etc.

N	G	X	Z	F	E
00					
01					
⋮					

2. Word:

Address letter G and numbers

G is the symbol for the dimension. Each number means a certain movement, e.g. 01 straight on movement, 03 circular movement, etc.

N	G	X	Z	F	Bem
00	01	125			
01	03				

3. Word:

Address letter X and numbers

X means X-axis. The numbers indicate the traverse path in X-direction. The number can have "+" or "-" sign.
X+125 means +1,25 mm in X-direction.

N	G	X	Z	F	Bem
00	01	125	2050	100	
01	03				

4. Word:

Address letter Z and numbers

Z means Z-axis. The numbers indicate the traverse path in Z-direction. Z+2o5o means 2o,5 mm in Z-direction.

N	G	X	Z	F	Bem
00	01	125	2050		
01	03				

5. Word:

Address letter F and numbers

F is the abbreviation of "feed". F1oo means a feed of 1oo mm per minute.

N	G	X	Z	F	Bem
00	01	125	2050	100	
01	03				

On industrial CNC-machines there are further words in use.

- Speed of main spindle (address letter S)
- Tool for the relative block (address letter T)
- Supplementary miscellaneous functions (address letter M)

etc.

The input format or block format

These 2 terms can be found with all programming schedules. The input format prescribes which values you have to put into the programming sheet for each single block to be put into the computer in this sequence.

The input format depends on the G-functions (path-functions). When threading you have to put in the pitch and the length of the thread. For example with G00 (positioning with rapid traverse), you have to put in only the path in X- or Z-direction.

Explanation

N../G../X±..../Z±...../F...

N.. The dots stand for numbers 00 to 95 (96 blocks)

G.. The dots stand for the numbers of the preparatory functions.

X±.... The 4 dots stand for numbers 0 to ±1999 (0 - 1.999")

Z±..... The 5 dots stand for numbers 0 to 19999 (0 - 19.999")

F... The 3 dots stand for numbers 1-199 (.1 - 19.9 inch per minute)

If the input format prescribes

N../G20

you have to put in only the block number and G20 into the programming sheet.

N	G	X	Z	F
⋮				
15	20			

The input format or block format

These 2 terms can be found with all programming schedules. The input format prescribes which values you have to put into the programming sheet for each single block to be put into the computer in this sequence.

The input format depends on the G-functions (path-functions). When threading you have to put in the pitch and the length of the thread, for example with G00 (positioning with rapid traverse). You have to put in only the path in X- or Z-direction.

Explanation

N../G../X±..../Z±...../F...

N.. The dots stand for numbers 00 to 95 (96 blocks)

G.. The dots stand for the numbers

X±.... The 4 dots stand for numbers ±0 to ±5999

Z±..... The 5 dots stand for numbers ±0 to ±39999

F... The 3 dots stand for numbers 1-499

If the input format prescribes

N../G20

you have to put in only the block number and G20 into the programming sheet.

N	G	X	Z	F
⋮				
15	20			

4. Programming

G20/G21/G22	4.1
G00 Positioning with rapid traverse	4.3 - 4.5
G84 Fixed cycle – longitudinal turning	4.7 - 4.17
G01 Linear interpolation	4.19 - 4.41
G02/G03 Circular interpolation – Clockwise – Counterclockwise	4.43 - 4.55
G33/G78 Threading with constant pitch, threading cycle	4.57 - 4.83
Control of dimensions – Corrections of dimensions	4.85
Programming the outline of a workpiece	4.87 - 4.91
Exercises	4.93 - 4.101

G20 – Program Hold

PROGRAMMBLATT EMCO COMPACT 5 CNC

N	G	X	Z	F	Bemerkungen	Stand
05	.					
06	.					
07	.					
08	20				Rechter Seitenstahl	

When programming G20 you interrupt the program. Only when you press the START key again, the next blocks will follow in the program.

When do you program G20?

+ When you have to change the tool
+ When you want to carry out a measuring operation.
+ If you want to change the revolutions of the main spindle.
+ If you want to change over from CNC-operation to hand operation.

Input format G20

N../G20

G21 – Empty Line

PROGRAMMBLATT EMCO COMPACT 5 CNC

N	G	X	Z	F	Bemerkungen	Stand
04						
05	.					
06	.					
07	21					
07	.					
08	.					
10	.					

When you program G21, you may add an additional block at a later stage.
If you prepare your program and you do not know yet wether you need one or two cuts of chip removal, then you program G21.

N../G21

G22 – Program End

PROGRAMMBLATT EMCO COMPACT 5 CNC

N	G	X	Z	F	Bemerkungen	Stand
00						
01						
02						
03						
04						
05						
06						
07	.					
08	.					
09	.					
10	.					
11	.					
12	22					

At the end of each program you have to program G22. Without the input of G22, the program cannot be started.
G22 is entered without any number values.

Input format G22

N../G22

G00 – Positioning with Rapid Traverse

The positioning of the turning tools, i.e. movement of same without chip removal, must be done with highest possible speeds (rapid traverse) for economic reasons. The slides move in Z- or X-direction.

Necessary inputs

1. Slide moves in X-direction: N00, X-value in thousandth of inch (.001).

2. Slide moves in Z-direction: N01, X=0, Z-value in thousandth of inch (.001).

The speed of the traverse is 27,5 inch per minute in both cases.

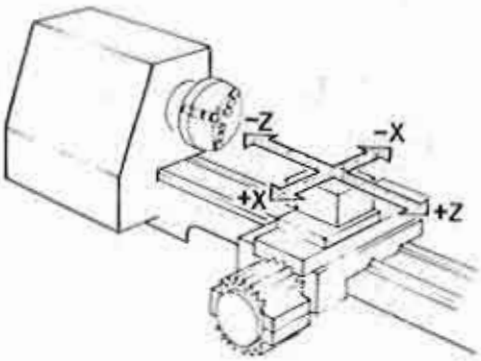

Input formats G00

1. N../G00/X±..../
2. N../G00/X=0/Z=...../

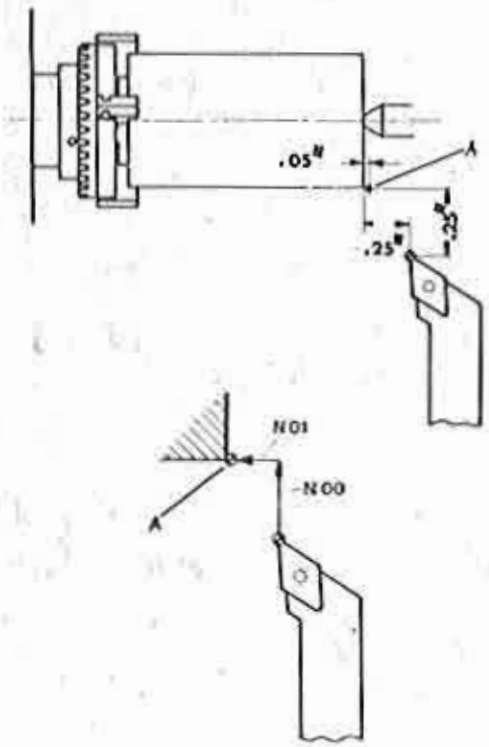

Example:

To facilitate the mounting and dismounting of the turning tool it keeps the indicated distance to the workpiece edge. The tool is moved with rapid traverse to point A.

Block N00 - Turning tool moves .25" in X-axis, sign "-". Z-value and F-value need not to be entered.

Block N01 - Turning tool moves .20" in Z-axis, sign "-". F-value need not to be entered.

N	G	X	Z	F	Ben
00	00	-250			
01	00	0	-200		
02	22				

G00 – Positioning with Rapid Traverse

The positioning of the turning tools, i.e. movement of same without chip removal, must be done with highest possible speeds (rapid traverse) for economic reasons. The slides move in Z- or X-direction.

Necessary inputs

1. Slide moves in X-direction: N00, X-value in hundredth of mm.

2. Slide moves in Z-direction: N01, X=0, Z-value in hundredth of mm.

The speed of the traverse is 7oo mm/min in both cases.

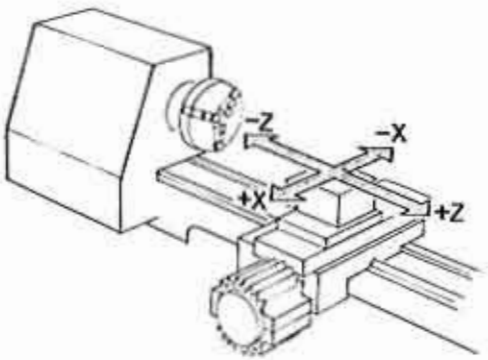

Input formats G00

1. N../G00/X±..../
2. N../G00/X=0/Z=...../

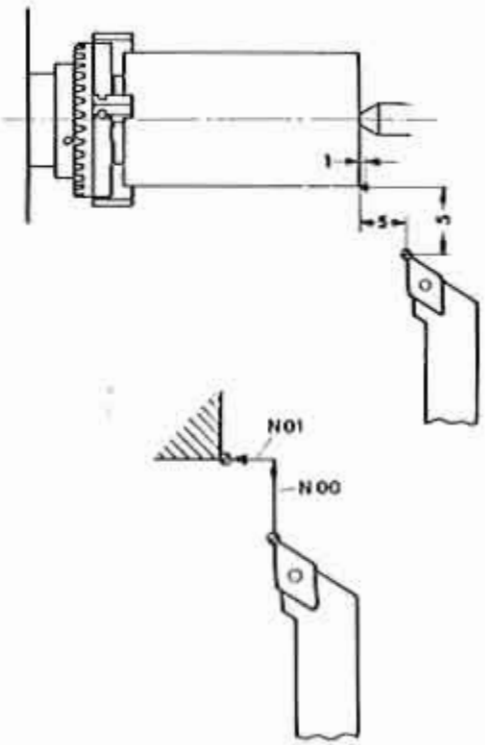

Example:

To facilitate the mounting and dismounting of the turning tool it keeps the indicated distance to the workpiece edge. The tool is moved with rapid traverse to point A.

Block N00 - Turning tool moves 15 mm in X-axis, sign "-". Z-value and F-value need not to be entered.

Block N01 - Turning tool moves 9 mm in Z-axis, sign "-". F-value need not to be entered.

N	G	X	Z	F	Ber
00	00	– 500			
01	00	0	– 400		

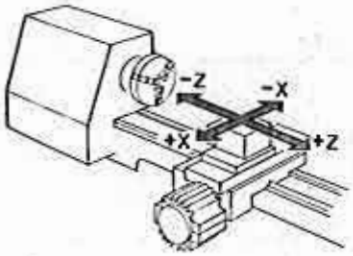

Programming exercise 1 (G00)

The workpiece is finished. The turning tool has to return with rapid traverse speed to O-point. Program the "program end" at O-point.

Note: There are 2 possibilities. Program both.

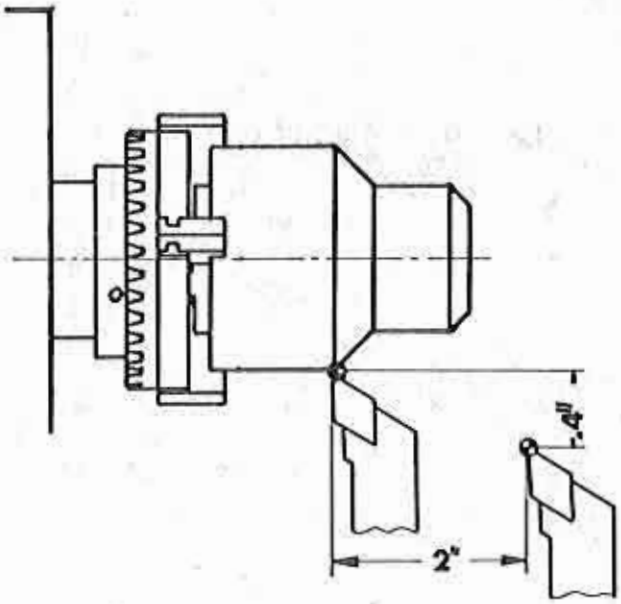

N	G	X	Z	F	Ber

N	G	X	Z	F	Ber

Programming exercise 2 (G00)

Program the tool movement at rapid traverse speed O-5 (1o blocks are necessary).

Program the points with one decimal point. One block equals .1".

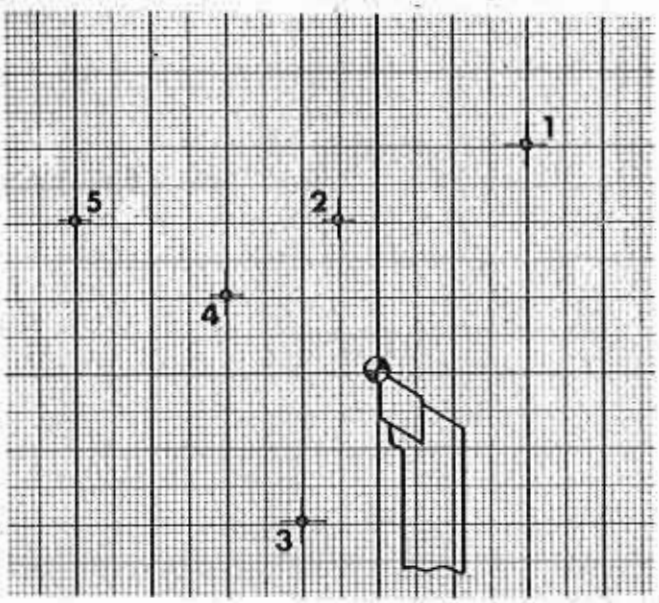

N	G	X	Z	F	B

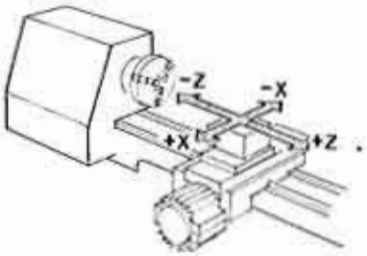

Programming exercise 1 (G00)

The workpiece is finished. The turning tool has to return with rapid traverse speed to O-point. Program the "program end" at O-point.

Note: There are 2 possibilities. Program both.

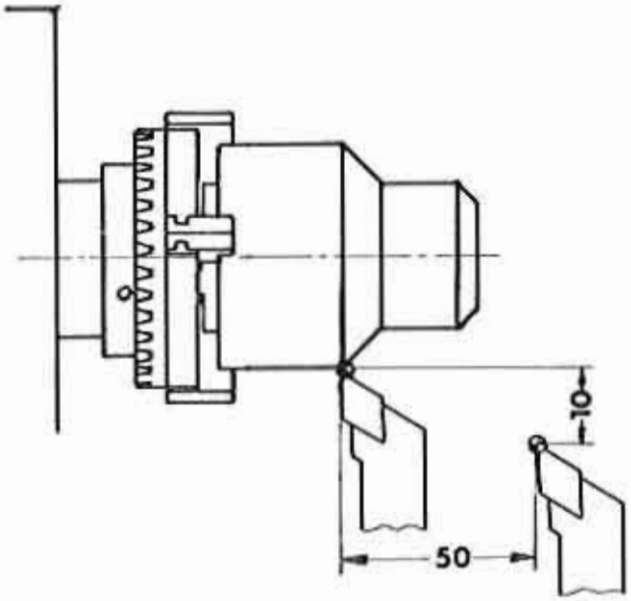

PROGRAMMBLATT EMCO COMPACT 5 CNC

N	G	X	Z	F	Ber

PROGRAMMBLATT EMCO COMPACT 5 CNC

N	G	X	Z	F	Ber

Programming exercise 2 (G00)

Program the tool movement at rapid traverse speed O-5 (lo blocks are necessary).

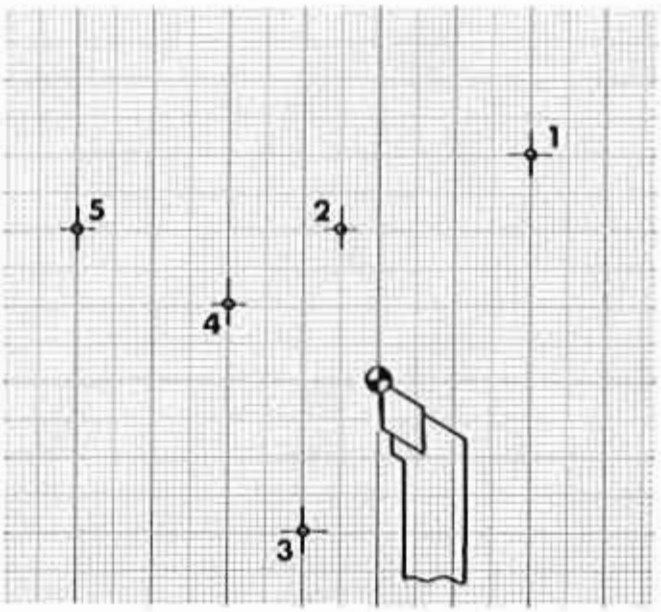

PROGRAMMBLATT EMCO COMPACT 5 CNC

N	G	X	Z	F	B

G84 – Fixed Cycle / Longitudinal Turning

As the word cycle says, the movement of the turning tool is a closed one.

Example:

Turning of shoulders on an axle

Hand operated machine

You feed in with the cross slide, move the longitudinal slide l1, bring the longitudinal slide back, feed in t1 and t2 etc.

There is a large percentage of turning jobs of this kind. This was the reason to implement a fixed cycle in the CNC machine.

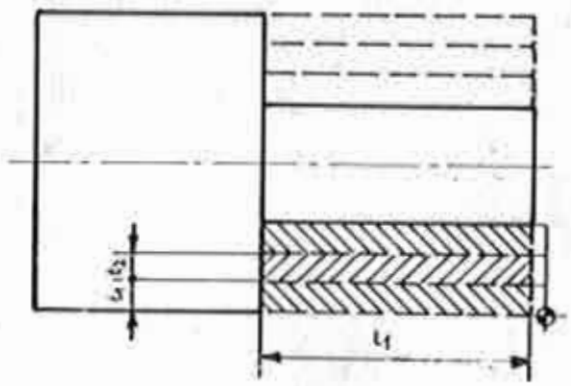

CNC-machine

Path function G84
If you program G84, the slides will move at programmed feed rates/rapid traverse in the programmed X-and Z-directions in a cycle.

v_F = programmed feed rate (1 - 19,9 inch per minute)

v_E = rapid traverse (27,5 inch per minute)

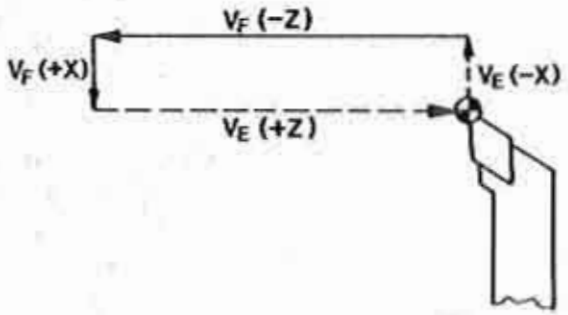

G84 – Fixed Cycle / Longitudinal Turning

As the word cycle says, the movement of the turning tool is a closed one.

Example:

Turning of shoulders on an axle

Hand operated machine

You feed in with the cross slide, move the longitudinal slide l1, bring the longitudinal slide back, feed in t1 and t2 etc.

There is a large percentage of turning jobs of this kind. This was the reason to implement a fixed cycle in the CNC machine.

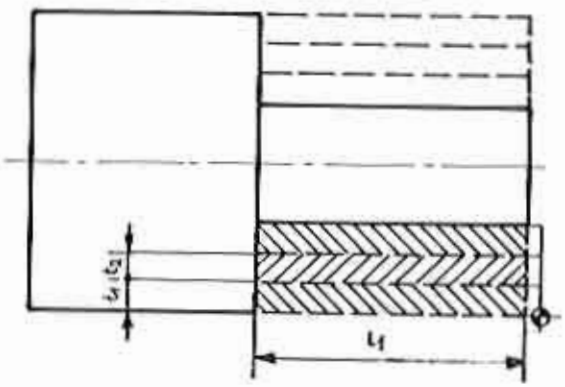

CNC-machine

Path function G84
If you program G84, the slides will move at programmed feed rates/rapid traverse in the programmed X-and Z-directions in a cycle.

v_F = programmed feed rate (1-4oo mm/min)

v_E = rapid traverse (2ooo mm/min)

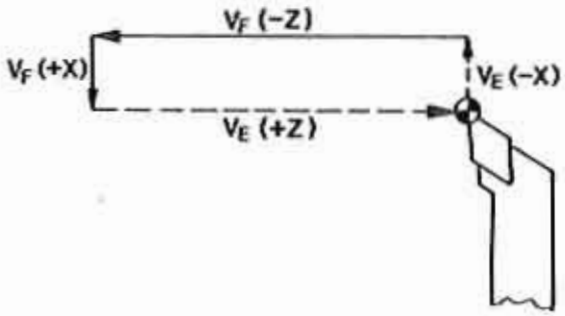

Possibilities and applications when turning

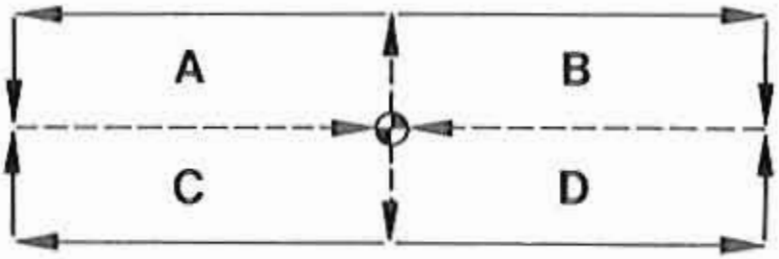

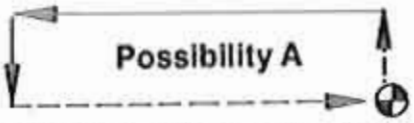

Example: Outside turning from right to left

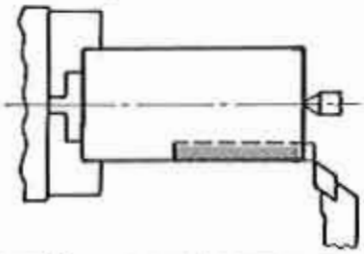

N	G	X	Z	F

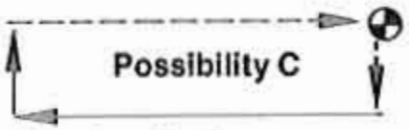

Example: Boring

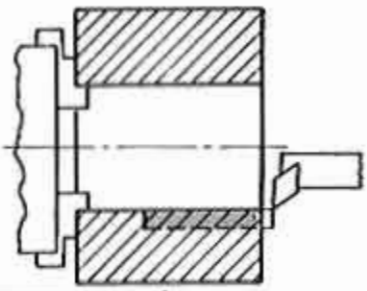

N	G	X	Z	F

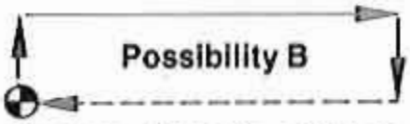

Example: Outside turning from left to right

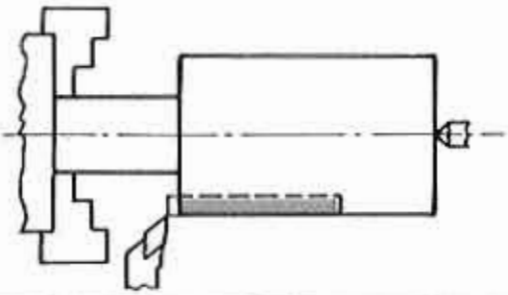

N	G	X	Z	F

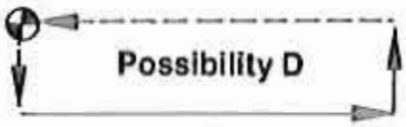

Hardly used for turning operations

N	G	X	Z	F

red = rapid traverse

blue = feed at given speed

Program Input G84

As per sign for X and Z you can program
4 cycles (A,B,C,D).

Inputs

1. Block number
2. G84
3. X-value in thousandth of inch (.001")
4. Z-value in thousandth of inch (.001")
5. Feed in tenth of inch (.1" per minute)

The first and the fourth movement are in rapid traverse.
The second and the third movement with the programmed feed speed.

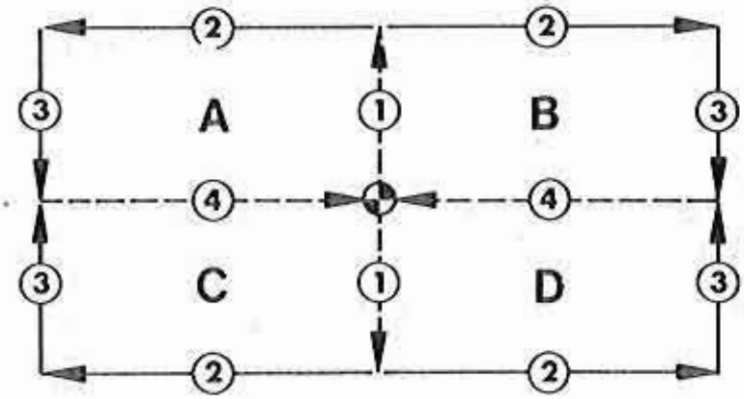

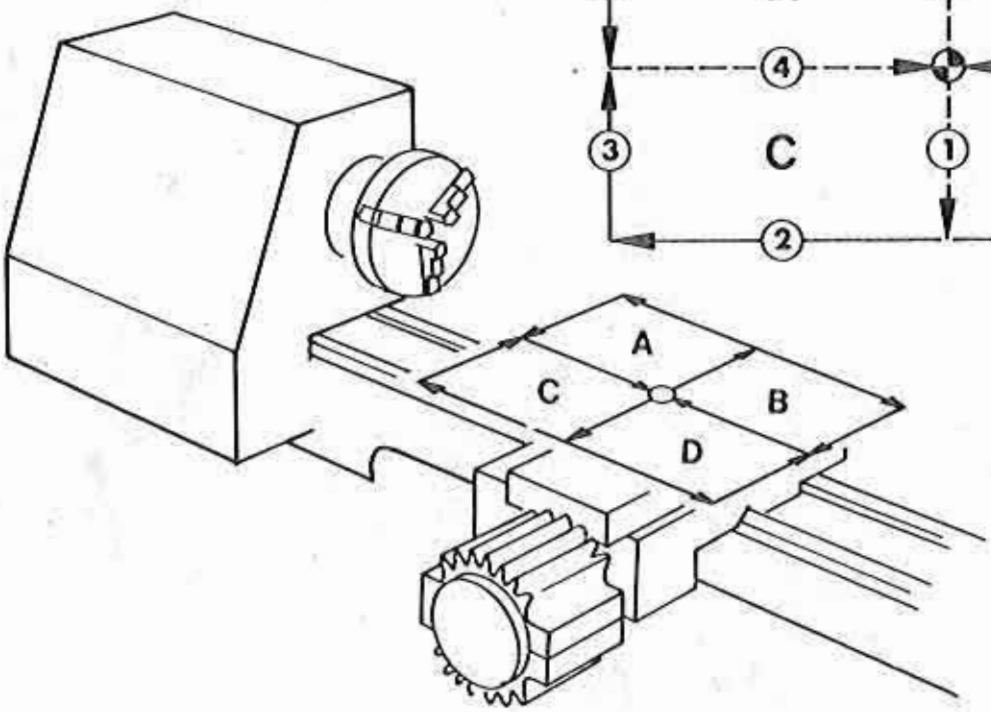

Example:

You want to traverse in cycle A.

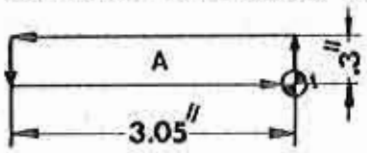

N	G	X	Z	F
..	84	-3oo	-3o5o	12o
1	2	3	4	5

Input formats G84

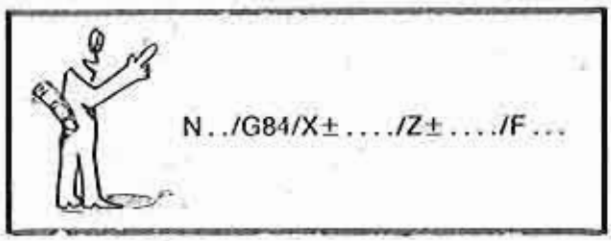

Program Input G84

As per sign for X and Z you can program
4 cycles (A,B,C,D).

Inputs

1. Block number
2. G84
3. X-value in hundredth of mm
4. Z-value in hundredth of mm
5. Feed in mm/min

The first and the fourth movement are in rapid traverse.
The second and the third movement with the programmed feed speed.

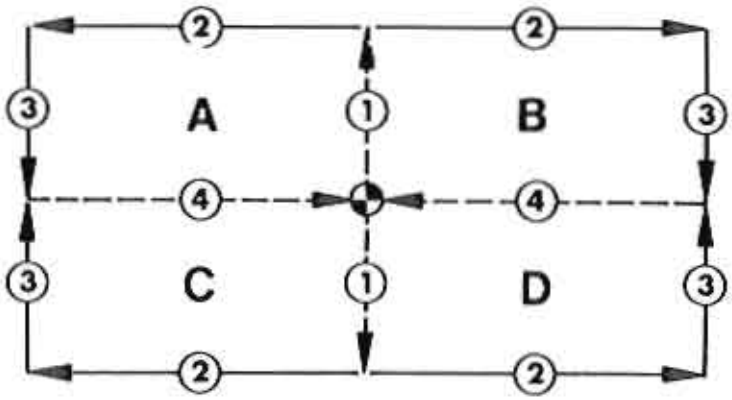

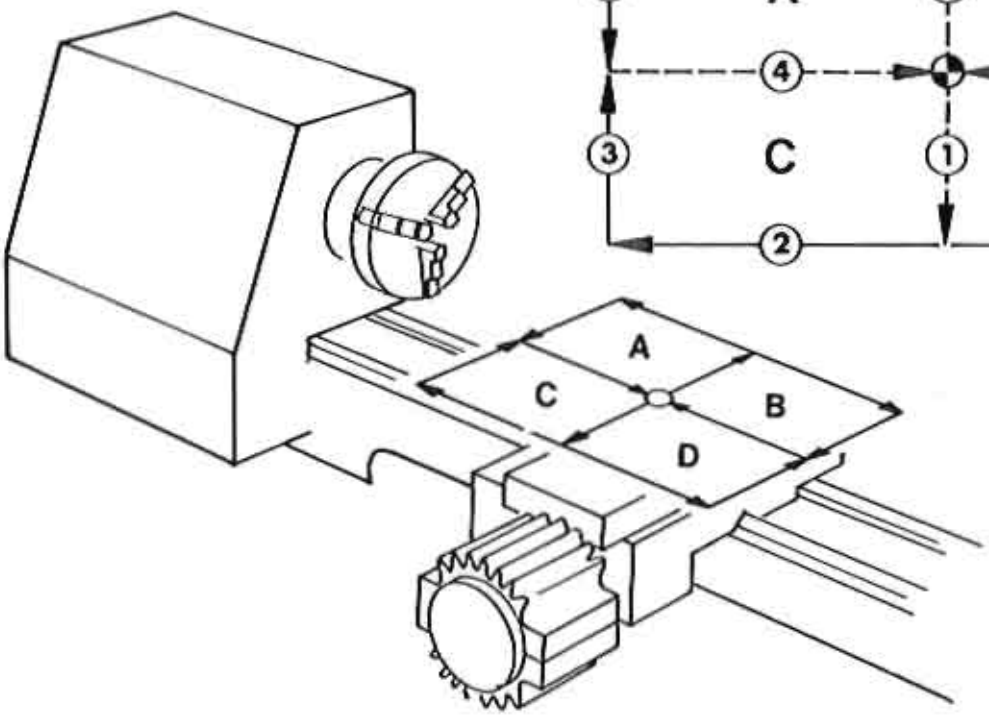

Example:

You want to traverse in cycle A.

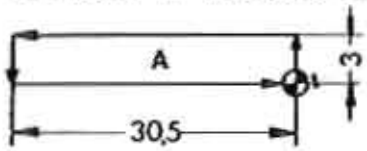

N	G	X	Z	F
..	84	-300	-3050	120
1	2	3	4	5

Input formats G84

N../G84/X±..../Z±..../F...

Example:

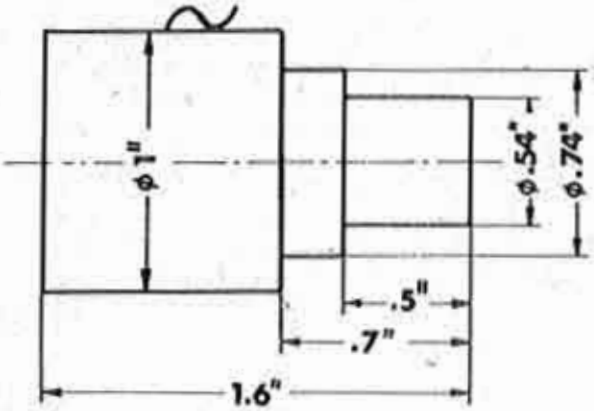

Manufacture workpiece as indicated left hand.
The tool is positioned at indicated distance. The cycles should start at point A.

Material: Aluminium ø 1"
Revolution of main spindle: 2ooo rpm.
Feed:.25 inch per minute
Max. depth of cut: .o5"

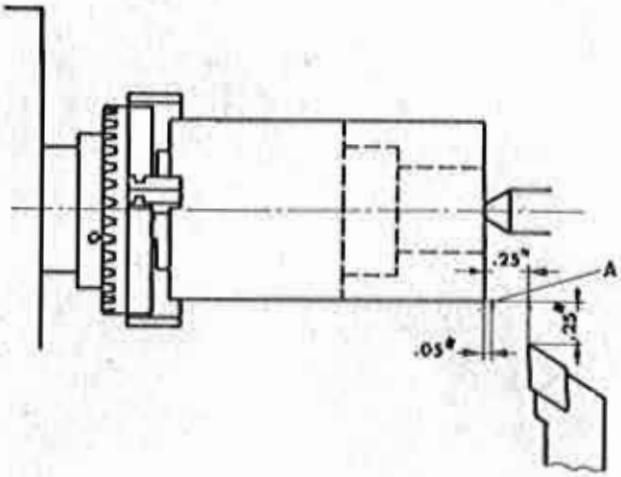

N	G	X	Z	F	Bemerku
00	00	-250			
01	00	0	-200		
02	84	-50	-750	25	
03	84	-100	-750	25	
04	84	-130	-750	25	
05	84	-180	-550	25	
06	84	-230	-550	25	
07	~~22~~				
	M30				

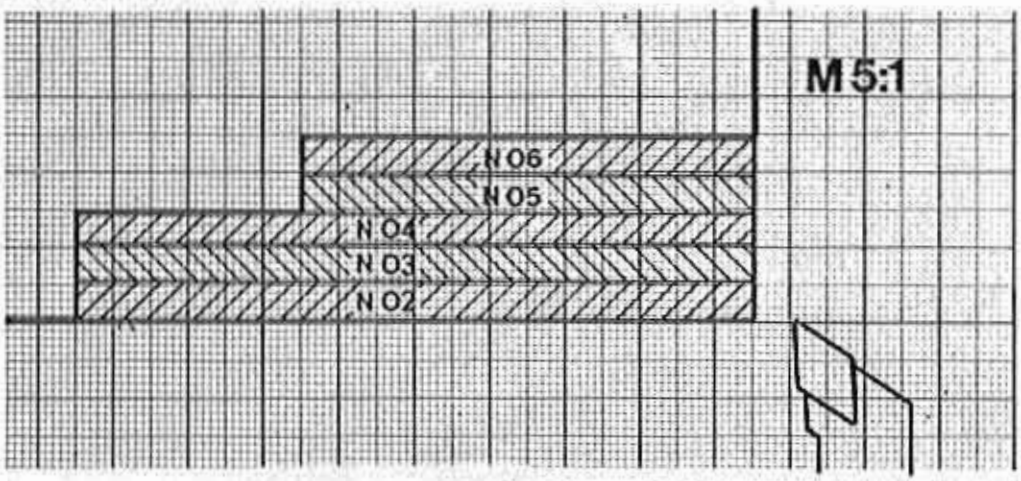

Example:

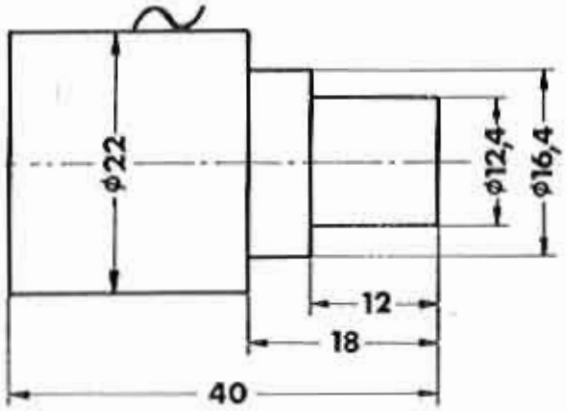

Manufacture workpiece as indicated left hand.
The tool is positioned at indicated distance. The cycles should start at point A.

Material: Aluminium Ø 22 mm
Revolution of main spindle: 2000 rpm.
Feed: 100 mm/min
Max. depth of cut: 1 mm

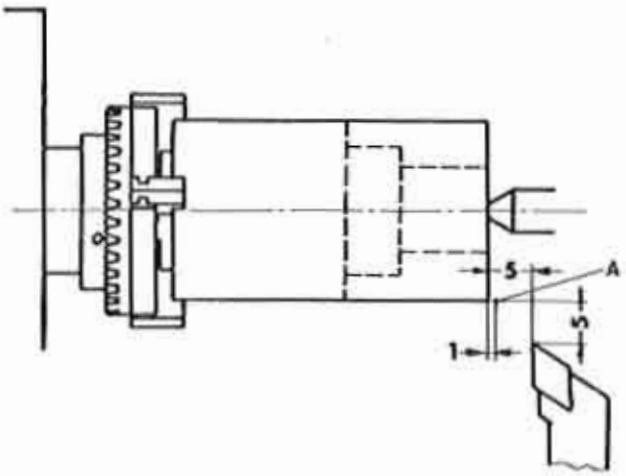

N	G	X	Z	F	Bemerku
00	00	-500			
01	00	0	-400		
02	84	-100	-1900	100	
03	84	-200	-1900	100	
04	84	-280	-1900	100	
05	84	-380	-1300	100	
06	84	-480	-1300	100	
07	22				

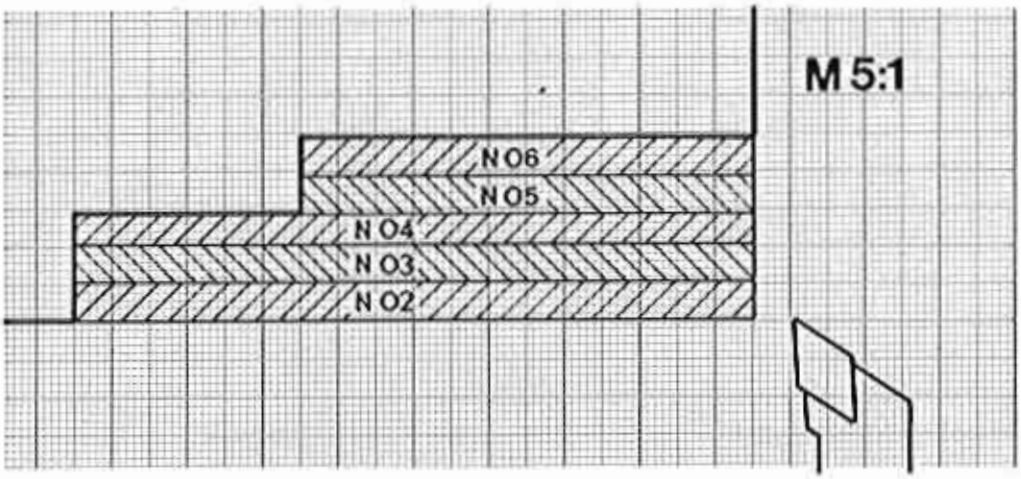

Programming exercise 3 (G84)

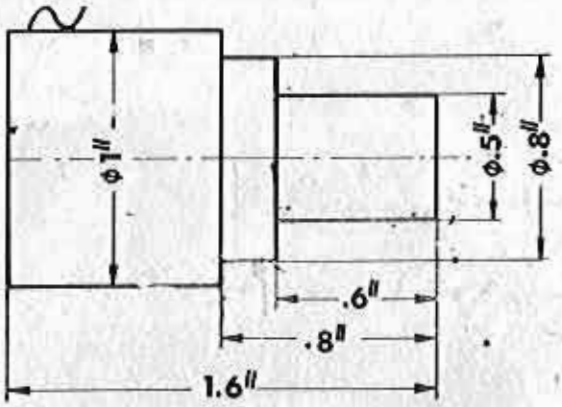

The workpiece has to be manufactured in G84 cycles.

- Max. depth of cut .05"
- Starting position of turning tool, see drawing.

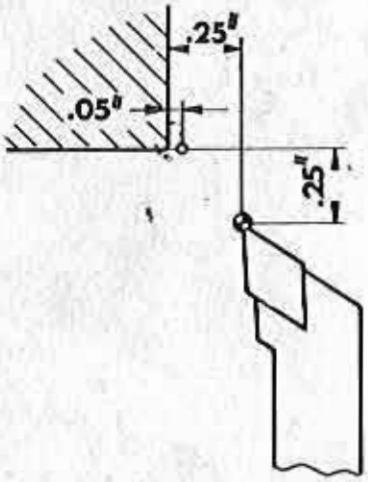

Choose revolutions of main spindle and feed from chart and write up program. Make a drawing in the scale of the transparent paper and put in block numbers.

Cutting speed: 1000 fpm
Feed: .001"
Calculate feed speed and spindle speed

N	G	X	Z	F

Programming exercise 3 (G84)

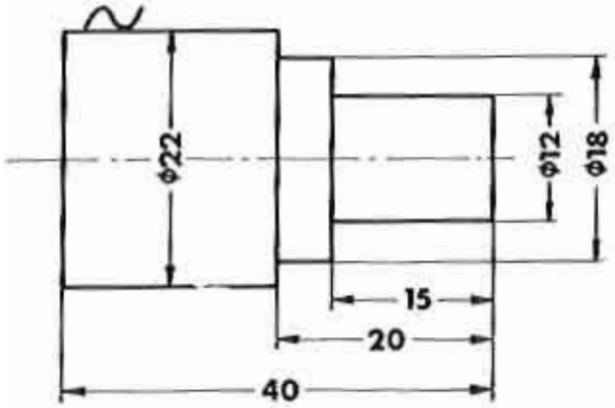

The workpiece has to be manufactured in G84 cycles.

- Max. depth of cut 1 mm
- Starting position of turning tool, see drawing.

Choose revolutions of main spindle and feed from chart and write up program. Make a drawing to scale 1:1o on left hand side.

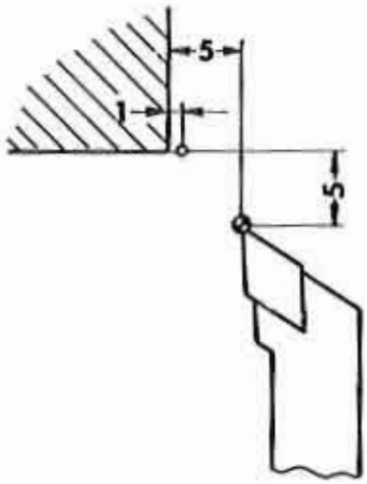

N	G	X	Z	F

Programming exercise 4 (G84)

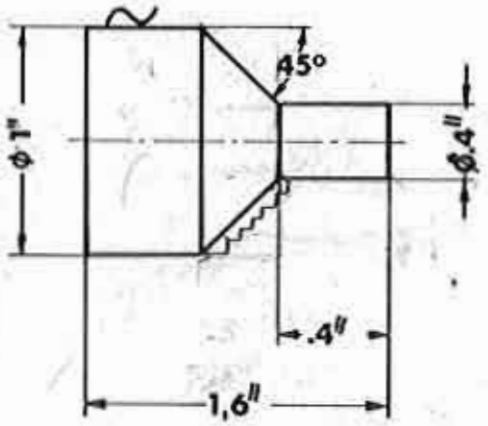

The first cuts are done using cycles G84.

- Max. depth of cut: .o5"
- Distance to edge of shoulder: .o2"
- Material: Aluminium

Calculate main spindle speed, feed and write up program. Make a drawing with the transparent scale.

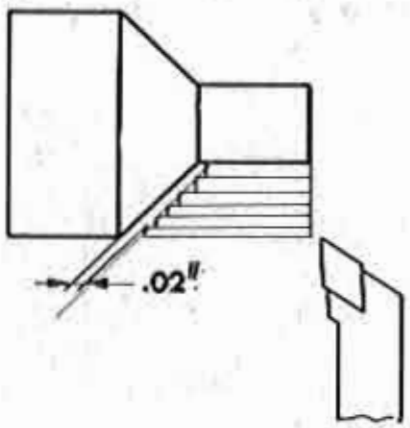

N	G	X	Z	F	Be

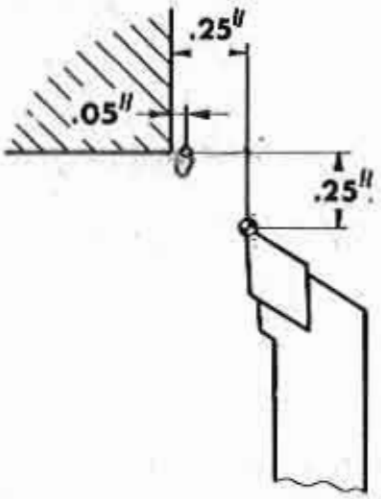

Programming exercise 4 (G84)

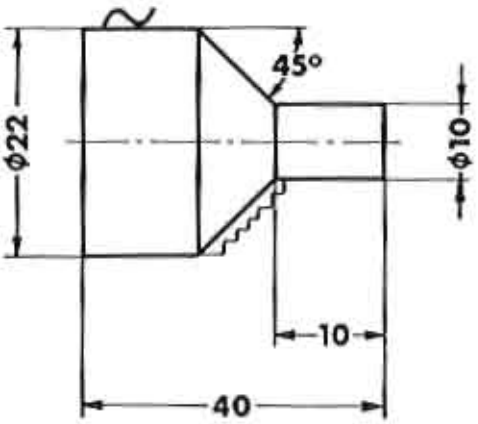

The first cuts are done using cycles G84.

- Max. depth of cut: 1 mm
- Distance to edge of shoulder: o,5 mm
- Material: Aluminium

Calculate main spindle speed, feed and write up program. Make a drawing to scale 1:5.

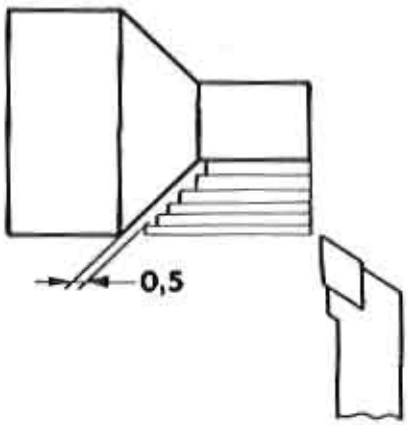

N	G	X	Z	F	Be

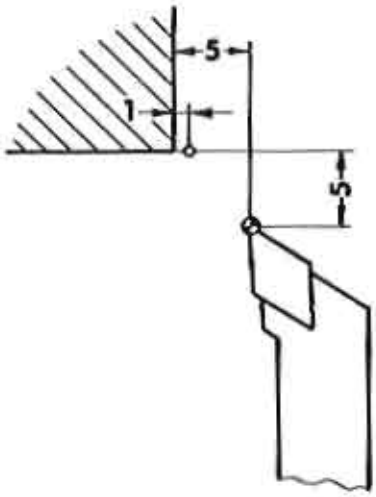

G01 – Linear Interpolation

Linear means straight lined

Interpolation means the finding of intermediate values

Linear interpolation means the finding of intermediate values on a (straight) line. This line can also be at a certain angle.

Possibilities of G01

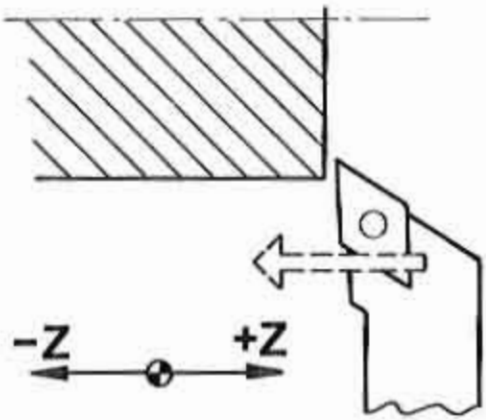

1. Turning in Z-direction (axis)

(Longitudinal turning) with given feed rate. No interpolation taking place.

(X-movement = 0)

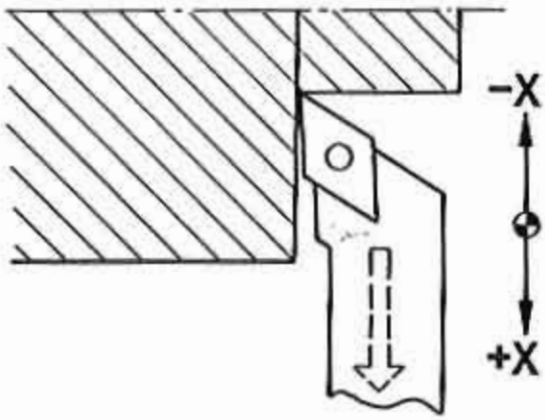

2. Turning in X-direction (axis)

(Facing) with given feed rate. No interpolation taking place.

(Z-movement = 0)

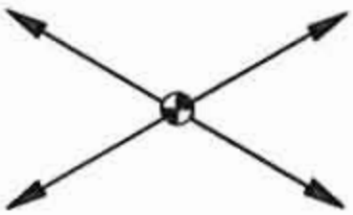

3. Taper turning

With given feed rate. X- and Z-values are being interpolated.

(X- and Z-movements)

1. G01 – Turning in Z-Direction

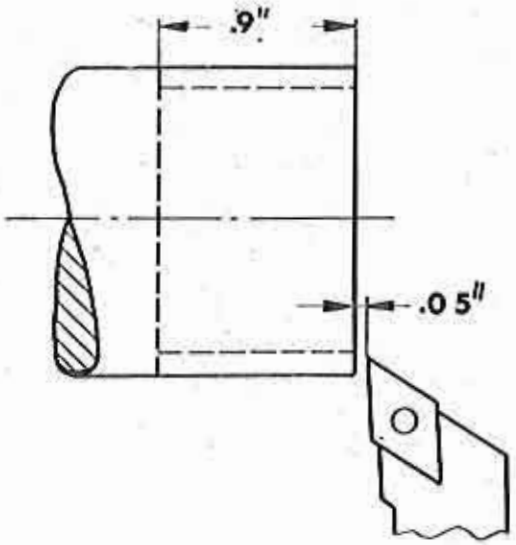

Example:

Tool bit shall move .95" in Z-direction. Tool bit position as indicated in drawing.

Inputs

1. Enter block number
2. Enter G01
3. X-value = 0
4. Z-value to be put in thousandth of inch
5. Put in F-value in tenth inch per minute

N	G	X	Z	F
..	01	0	-950	25

Input format longitudinal turning

N../G01/X = 0/Z = ± ...../F = ...

2. G01 – Turning in X-Direction

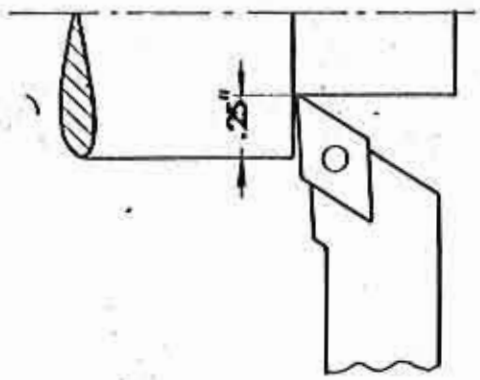

Example:

Tool bit shall face end plane (cut end plane); tool bit position to start as indicated in drawing.

Inputs

1. Enter block number
2. Enter G01
3. X-value to be put in in thousandth of inch
4. Z-value = 0
5. Put in F-value in tenth of inch

N	G	X	Z	F	B
..	01	250	0	25	

Input format G01 facing

N../G01/X = ± .../Z = 0/F= ...

1. G01 – Turning in Z-Direction

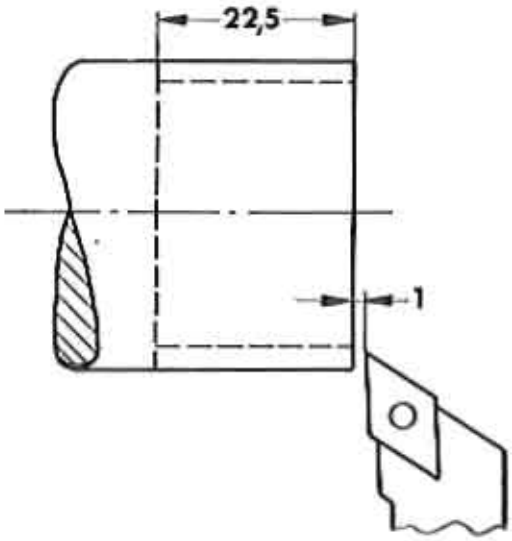

Example:

Tool bit shall move 23,5 mm in Z-direction. Tool bit position as indicated in drawing.

Inputs

1. Enter block number
2. Enter G01
3. X-value = 0
4. Z-value to be put in in hundredth of mm.
5. Put in F-value in mm/min

N	G	X	Z	F
..	01	0	2350	80

longitudinal turning

N../G01/X = 0/Z = ± ...../F = ...

2. G01 – Turning in X-Direction

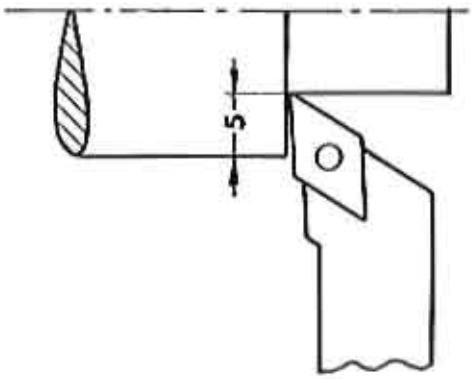

Example:

Tool bit shall face end plane (cut end plane); tool bit position to start as indicated in drawing.

Inputs

1. Enter block number
2. Enter G01
3. X-value to be put in in hundredth of mm
4. Z-value = 0
5. Put in F-value in mm/min

N	G	X	Z	F
..	01	-500	0	80

Input format G01 facing

N../G01/X = ± .../Z = 0/F= ...

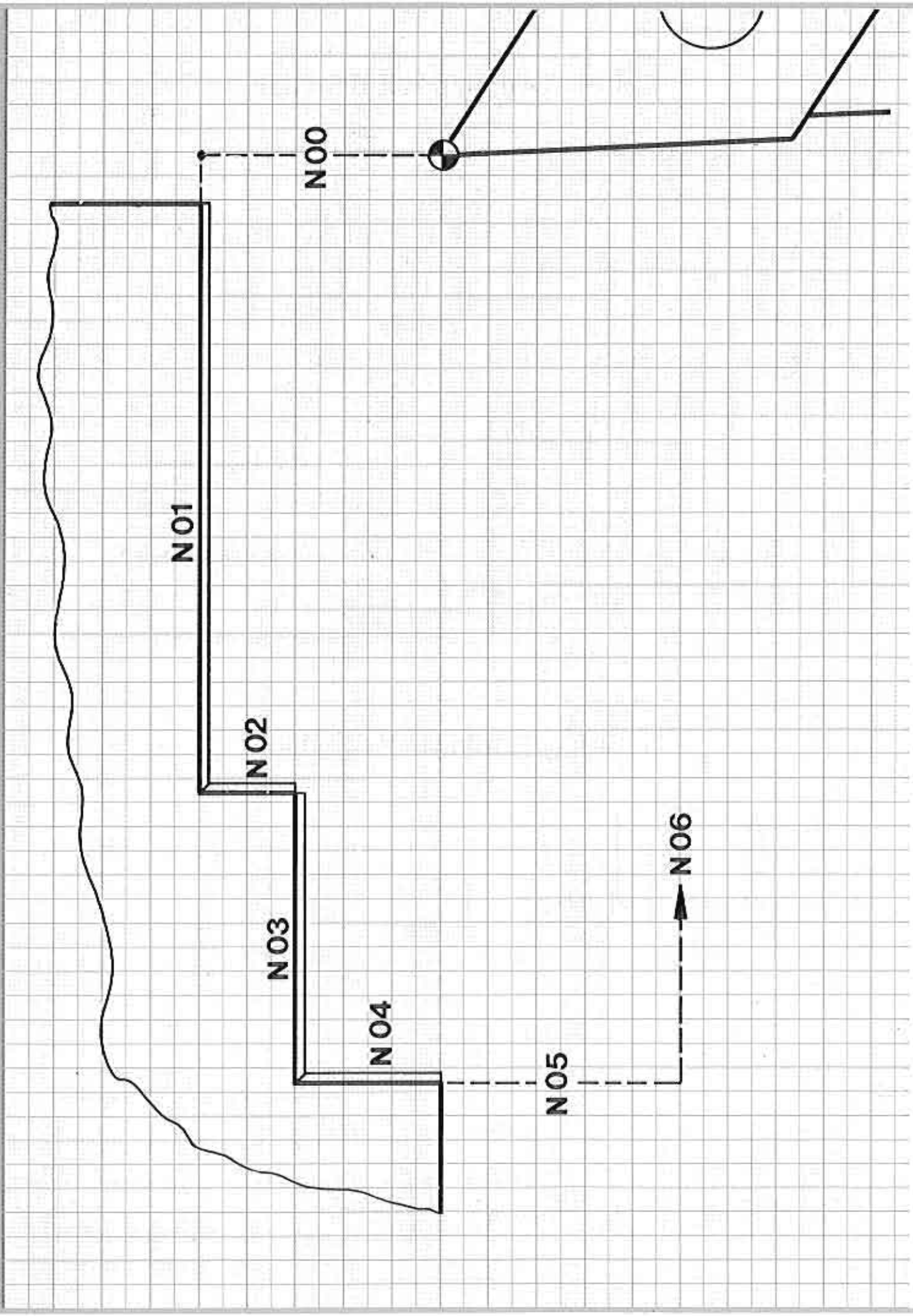
N00
N01
N02
N03
N04
N05
N06

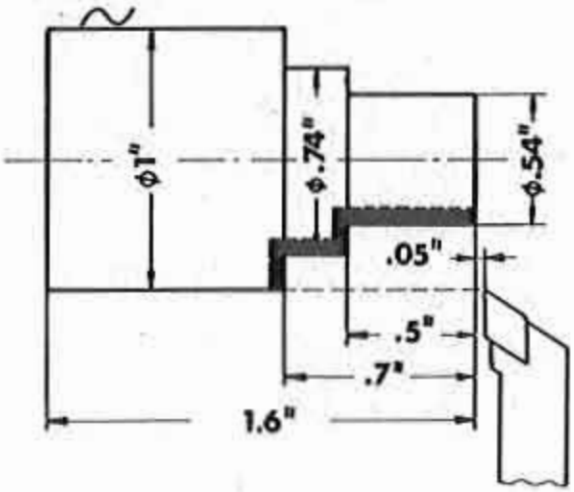

Example:

Finishing of the shoulder workpiece in one cut. The depth of cut to be .01" The tool bit's starting position as indicated in the drawing.

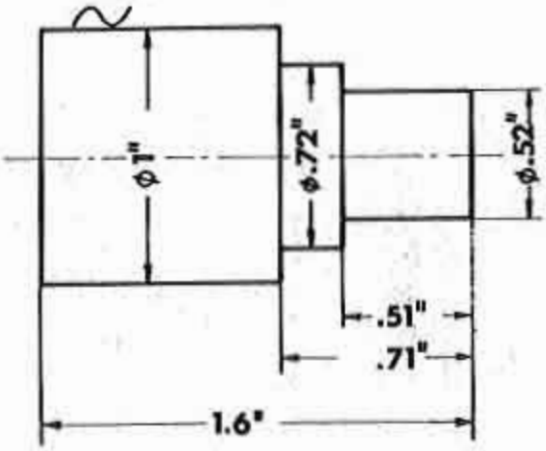

N	G	X	Z	F
00	00	-240		
01	01	0	-560	20
02	01	100	0	20
03	01	0	-200	20
04	01	140	0	20
05	00	250		
06	00	0	760	
07	22			

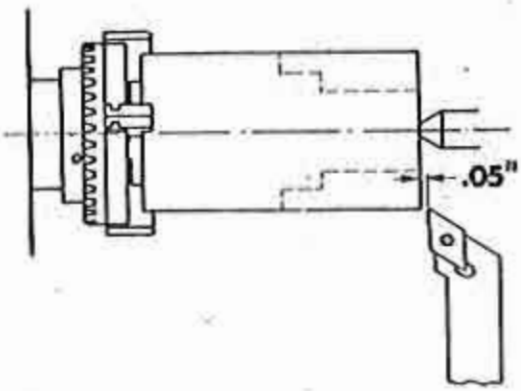

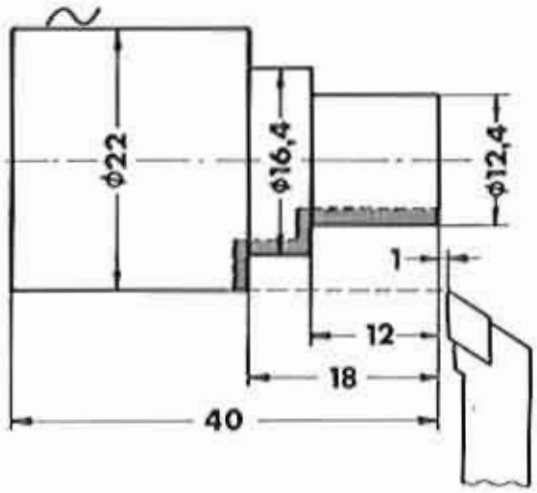

Example:

Finishing of the shoulder workpiece in one cut. The depth of cut to be o,2o mm. The tool bit's starting position as indicated in the drawing.

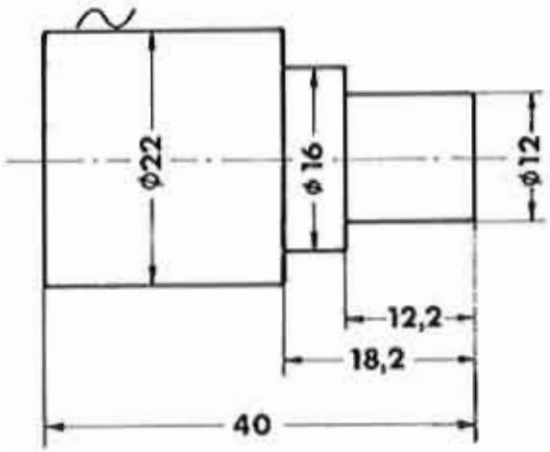

N	G	X	Z	F
00	00	-500		
01	01	0	-1320	50
02	01	200	0	50
03	01	0	-600	50
04	01	300	0	50
05	00	500		
06	00	0	1920	
07	22			

Programming exercise 5 (G01)

Unfinished workpiece

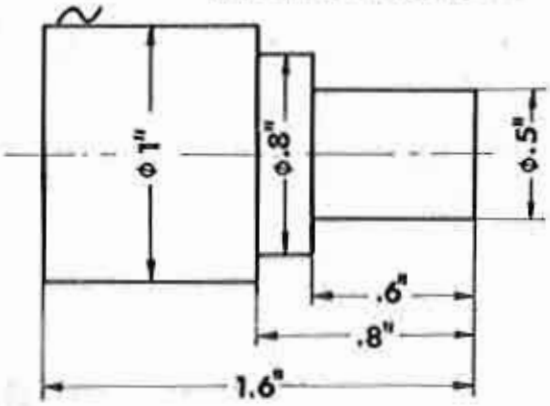

A chip of .012" depth has to be turned off the unfinished workpiece (exercise 3, page 4.15) in one cut.

Starting position of turning tool see drawing.

Make a drawing in scale of the transparent scale using the drawing paper and put in block numbers. Note that the tousandth of inch cannot be measured from the drawing in this scale, so you must calculate the paths.

Finished workpiece

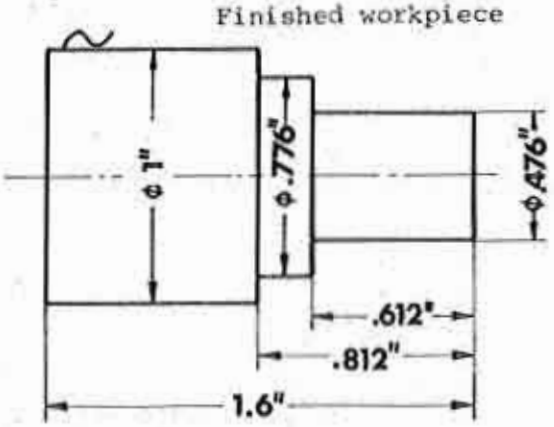

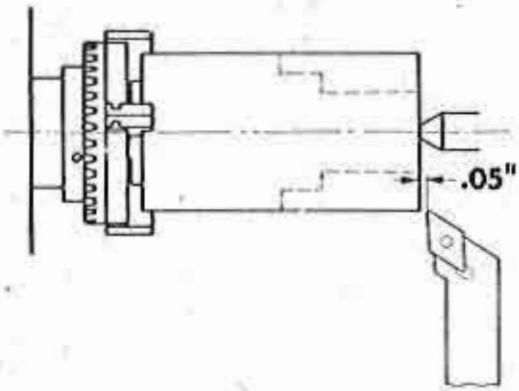

N	G	X	Z	F

Programming exercise 5 (G01)

Unfinished workpiece

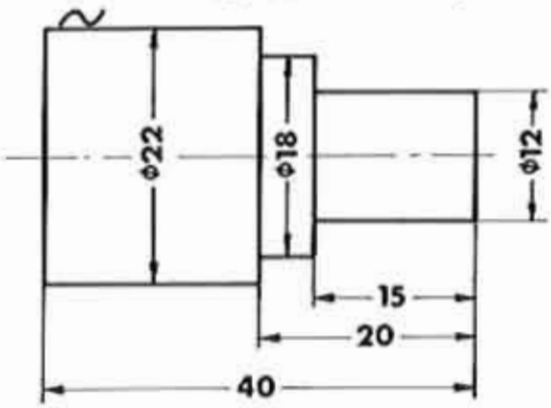

A chip of o,3 mm depth has to be turned off the unfinished workpiece (exercise 3) in one cut.

Starting position of turning tool see drawing.

Finished workpiece

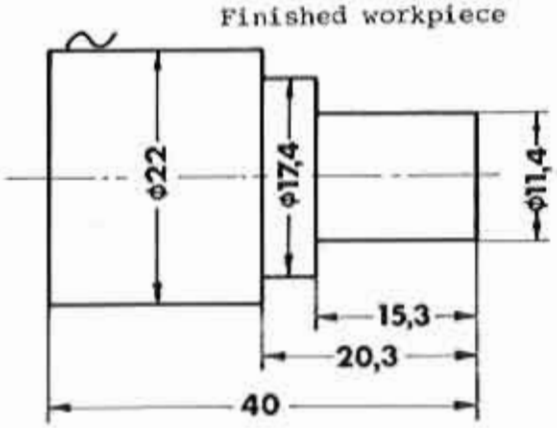

Make a drawing in scale 10:1 using the drawing paper and put in block numbers.

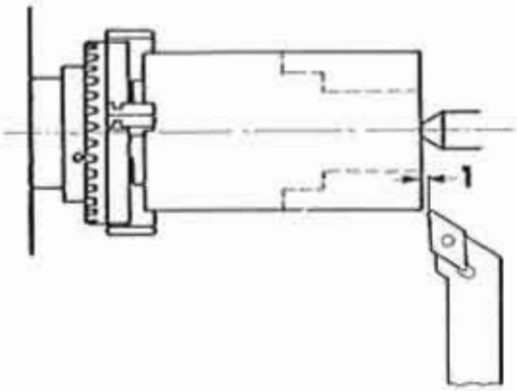

N	G	X	Z	F

3. G01 – Linear Interpolation
Taper Turning

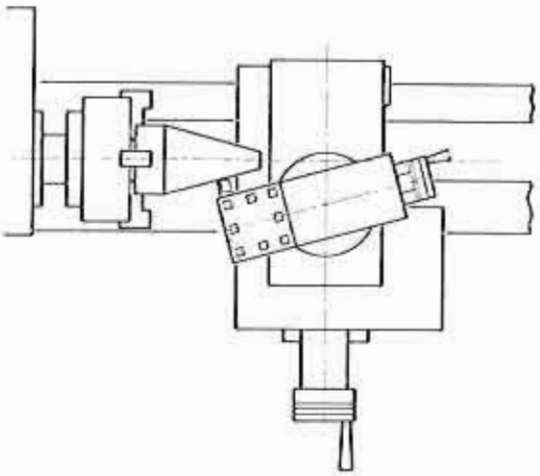

Hand operated machine

On a mechanical / conventional lathe the top slide is clamped at the desired taper angle.
It is the top slide which effects the feed movement and not longitudinal or cross slides.

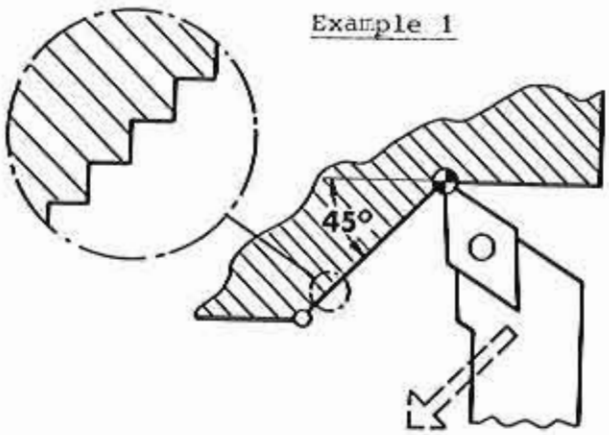

CNC-machine

On the CNC-lathe we do not find a top slide. The feed movements must be executed by longitudinal and cross slides. That means: longitudinal and cross slides have to move in a certain relation to each other, according to the taper angle.

On the COMPACT 5 CNC both slides are not moving at the same time, but one after another. The microprocessor calculates the ratio X:Z and gives the instructions to traverse to the step motors. This calculation of the X:Z ratios is called linear interpolation.

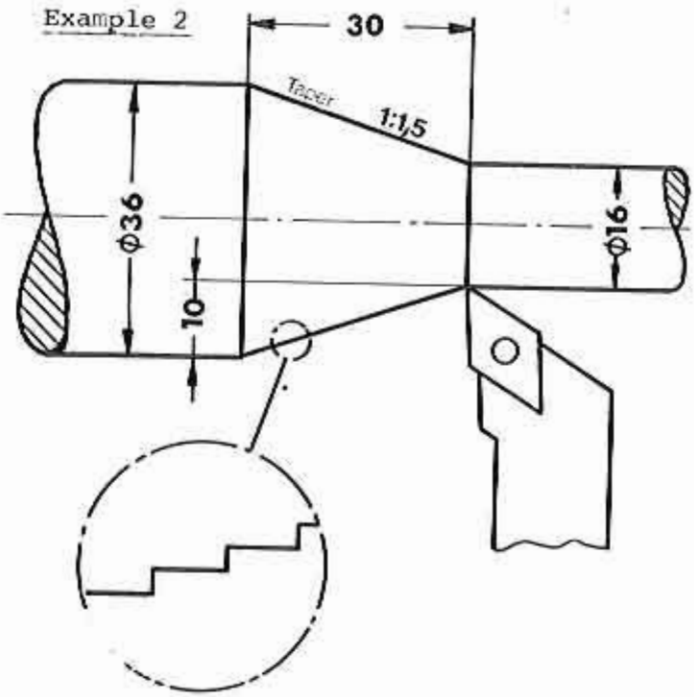

Example 1

Angle = 45°
The ratio X:Z at 45° is 1:1. Longitudinal and cross slides move at same intervals.

Example 2

The ratio X:Z = 10:30 = 1:3
This means 3 steps in Z-axis and 1 step in X-axis.

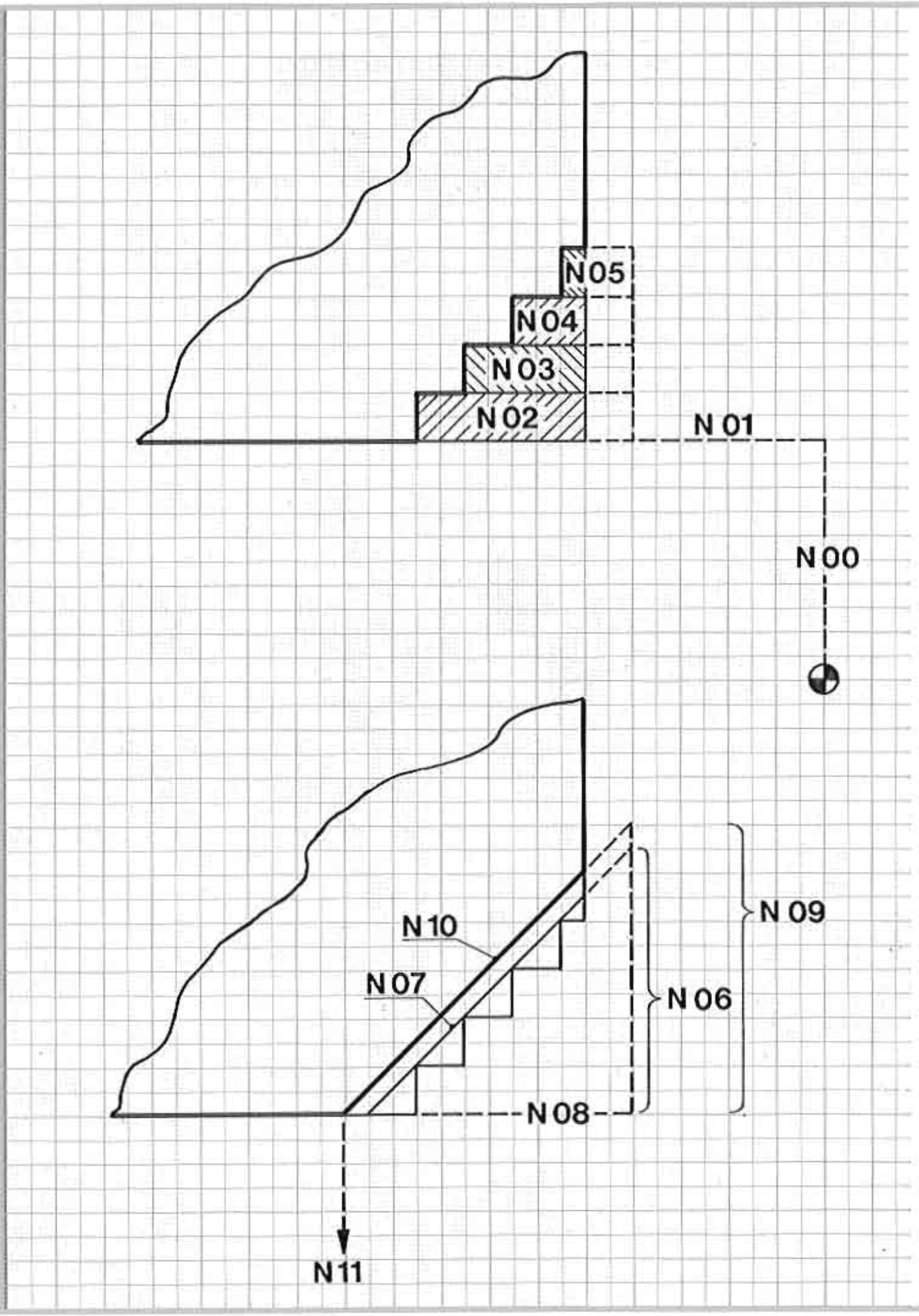
N05
N04
N03
N02
N 01
N 00
N 10
N 07
N 09
N 06
N 08
N 11

Taper 45°
(X-value and Z-value are the same)

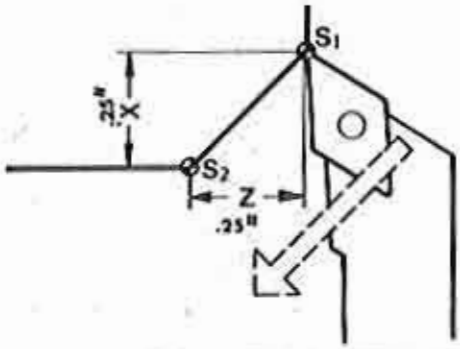

Inputs G01

1. Block number
2. G01
3. X-value (S_2 value) of taper end point in thousandth of inch
4. Z-value (S_2 value) of taper end point in thousandth of inch
5. F-value in tenth inch per minute

N	G	X	Z	F	B
..	01	250	-250	...	

Input format G01

N../G01/X ± ..../Z ± ...../F ...

Example:

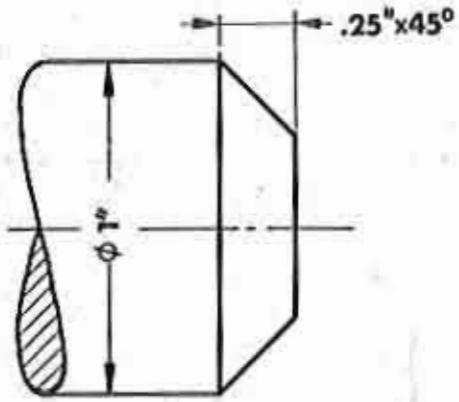

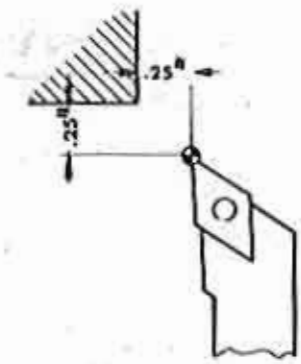

A chamfer of 45° x .25" has to be turned. Starting point of tool bit as indicated.

N	G	X	Z	F
00	00	-250		
01	00	0	-200	
02	84	-50	-225	25
03	84	-100	-175	25
04	84	-150	-125	25
05	84	-200	-75	25
06	00	-275		
07	01	275	-275	25
08	00	0	275	
09	00	-300		
10	01	300	-300	25
11	00	250		
12	00	0	500	
13	22			

Taper 45°
(X-value and Z-value are the same)

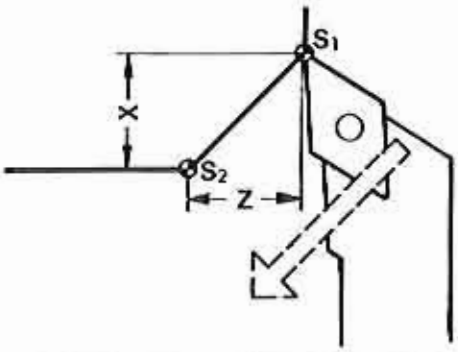

Inputs G01

1. Block number
2. G01
3. X-value (S_2 value) of taper end point in hundredth of mm
4. Z-value (S_2 value) of taper end point in hundredth of mm
5. F-value in mm/min

N	G	X	Z	F
..	01	+500	-500	...

Input format G01

N../G01/X ± ..../Z ± ...../F ...

Example:

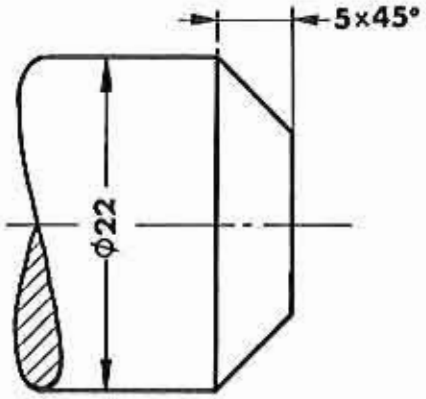

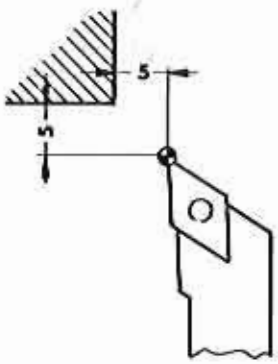

A chamfer of 45° x 5 mm has to be turned. Starting point of tool bit as indicated.

N	G	X	Z	F
00	00	-500		
01	00		-400	
02	84	-100	-450	80
03	84	-200	-350	80
04	84	-300	-250	80
05	84	-400	-150	80
06	00	-550		
07	01	+550	-550	
08	00	0	+550	
09	00	-600		
10	01	+600	-600	
11	00	500		
12	00	0	+1000	
13	22			

Programming exercise 6 (G01)

Taper 45°

Program the taper out of programming exercise page 4.17,G84. Choose the starting position of the tool bit on your own.

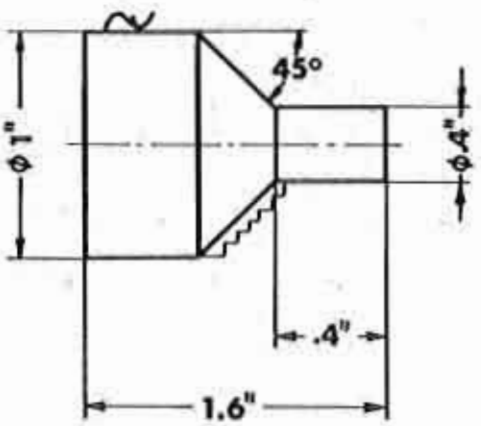

N	G	X	Z	F

Programming exercise 6 (G01)

Taper 45°

Program the taper out of programming exercise 4, G84. Choose the starting position of the tool bit on your own.

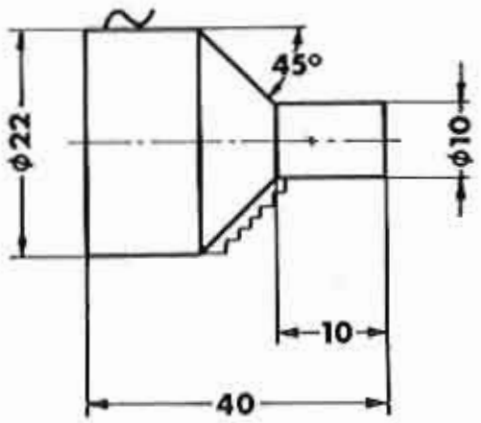

N	G	X	Z	F

Example 2

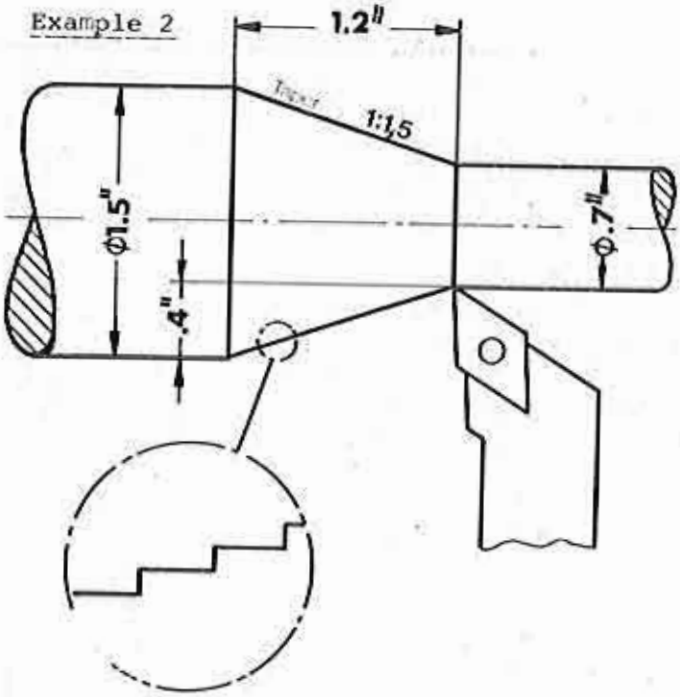

Example 2

The ratio X:Z = 0.4:1.2"=1:3
This means 3 steps in Z-axis and 1 step in X-axis.

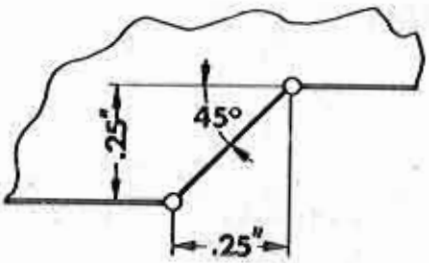

Inputs

Page 4.33

1. Block number
2. G01
3. X-coordinate of taper end point
4. Z-coordinate of taper end point
5. F-value in tenth of inch

N	G	X	Z	F
	01	250	-250	25

Input format G01 taper

N../G01/X±..../Z±...../F.../

Alarm signal A07

When you put in other data than X:Z = (1-39):(1-39) the alarm signal A07 appears. The computer does not know these other X:Z ratios.

Tapers in General

Possible angles on COMPACT 5 CNC

The following taper angles are possible:

Ratio X:Z

X:Z = (1 to 39) : (1 to 39)

The number of possible angles is limited because of computer capacities.
On the Compact 5 CNC the slides do not move at the same time, but one after another. When turning at an angle ratio of 39:35 we would produce a somewhat rough surface on the workpiece, so we limit ourselves in the turning exercises to the ratio.

X:Z = (1 to 1o) : (1 to 1o)

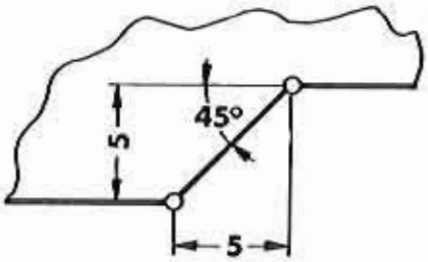

Inputs

Program the end point of the taper.

1. Block number
2. G01
3. X-coordinate of taper end point
4. Z-coordinate of taper end point
5. F-value in mm/min

N	G	X	Z	F
	01	+500	−500	80

Input format G01 taper

N../G01/X±..../Z±...../F.../

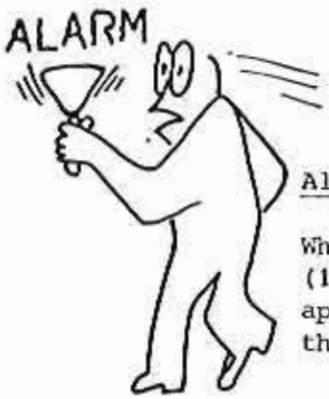

Alarm signal A07

When you put in other data than X:Z = (1-39):(1-39) the alarm signal A07 appears. The computer does not know these other X:Z ratios.

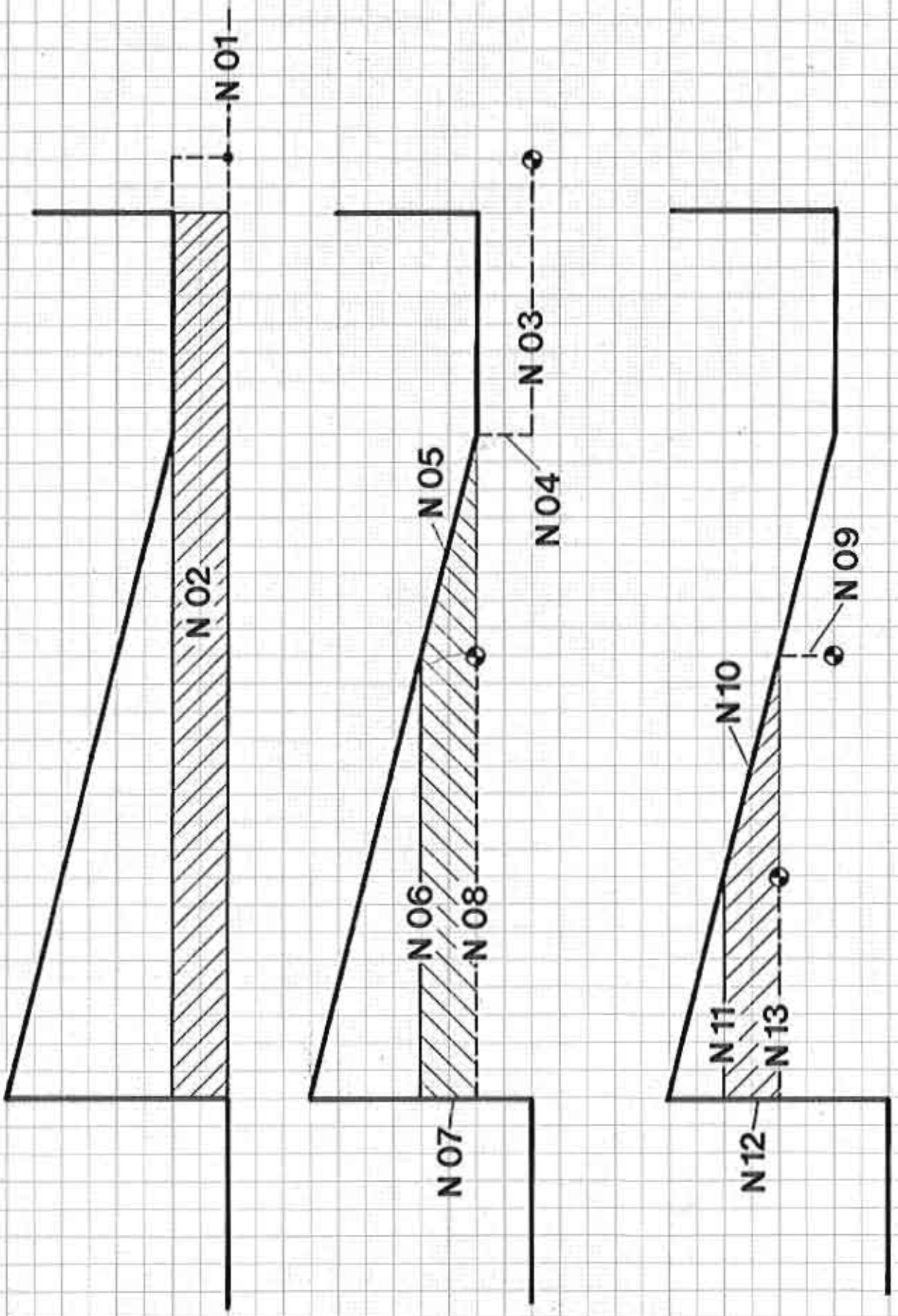
N 01
N 02
N 03
N 04
N 05
N 06
N 07
N 08
N 09
N 10
N 11
N 12
N 13

N	G	X	Z	F	I
00	00	-250			
01	00	0	-200		
02	84	-50	-850	20	
03	00	0	-250		
04	00	-50			
05	01	-50	-200	20	
06	01	0	-400	20	
07	01	50	0	20	
08	00	0	400		
09	00	-50			
10	01	-50	-200	20	
11	01	0	-200	20	
12	01	50	0	20	
13	00	0	200		
14	00	-50			
15	01	-50	-200	20	
16	01	200	0	20	
17	00	250			
18	00	0	1050		
19	22				

Example:

Taper 1:2

A taper 1:2 is to be turned.

Right hand side tool.

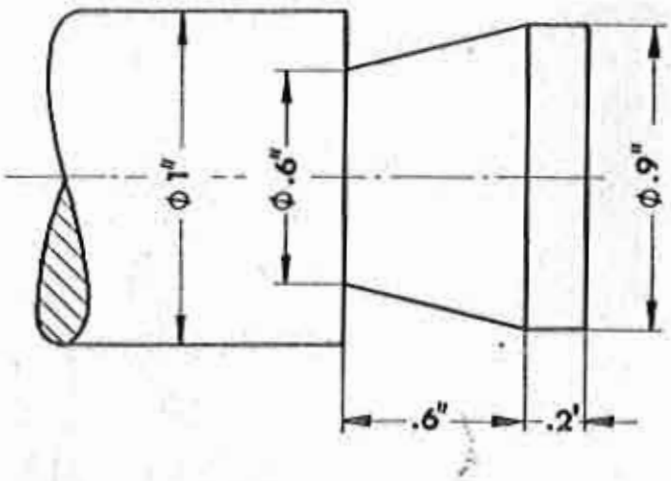

Taper denomination

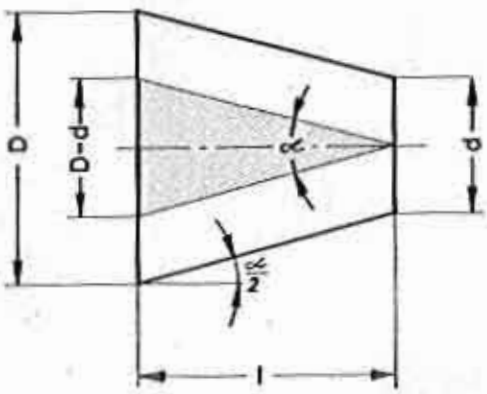

$$\text{Taper } 1:K = \frac{\text{Difference of diameter}}{\text{Taper length}} = \frac{D-d}{l}$$

$\frac{\alpha}{2}$ is the programming angle

α is called taper angle

N	G	X	Z	F
00	00	-500		
01	00	0	-400	
02	84	-100	-1700	80
03	00	0	-500	
04	00	-100		
05	01	-100	-400	80
06	01	0	-800	80
07	01	100	0	80
08	00	0	800	
09	00	-100		
10	01	-100	-400	80
11	01	0	-400	80
12	01	100	0	80
13	00	0	400	
14	00	-100		
15	01	-100	-400	80
16	01	400	0	80
17	00	500		
18	00	0	2100	
19	22			

Example:

Taper 1:2

A taper 1:2 is to be turned.

Right hand side tool.

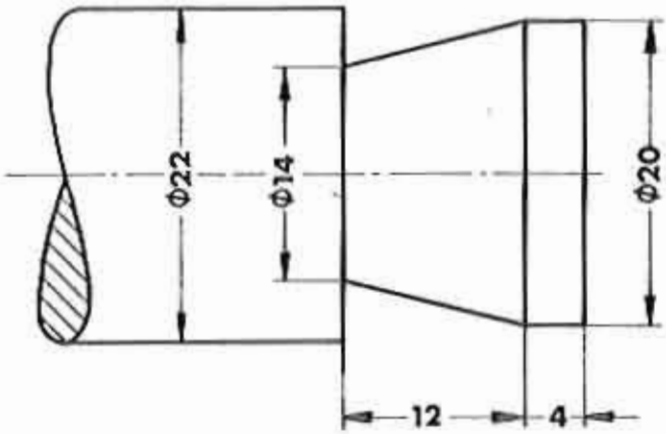

Taper denomination

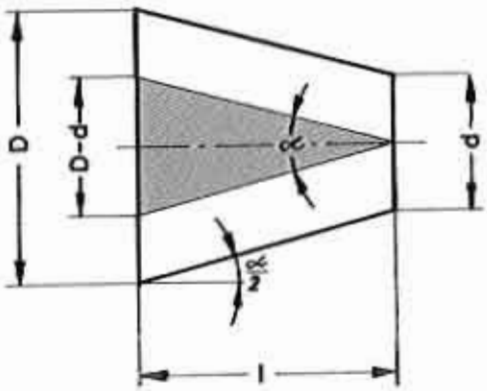

$$\text{Taper } 1:K = \frac{\text{Difference of diameter}}{\text{Taper length}} = \frac{D-d}{l}$$

$\frac{\alpha}{2}$ is the programming angle

α is called taper angle

Programming exercise 7 (G01)

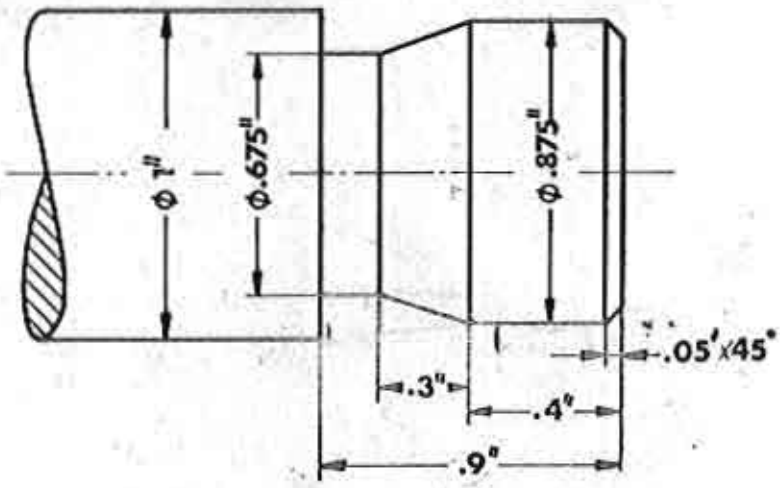

N	G	X	Z	F

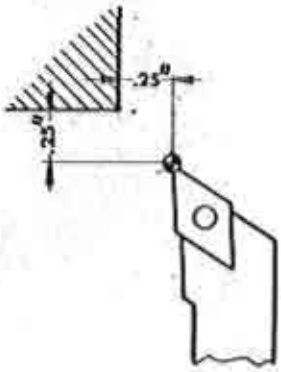

Programming exercise 7 (G01)

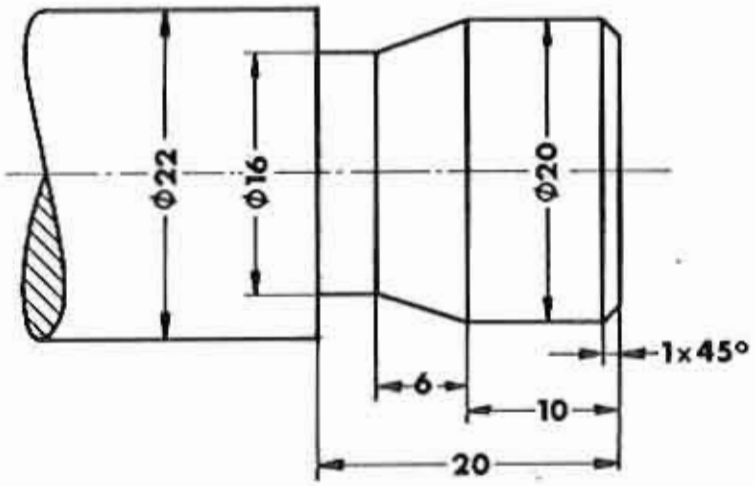

N	G	X	Z	F

Angle $\alpha/2$ and X:Z ratios

Angle	X:Z
5,71°	1:1o
6,34°	1: 9
8,13°	1: 7
9,64°	1: 6
11,3°	1: 5
12,52°	2: 9
14,o°	1: 4
15,94°	2: 7
16,69°	3:1o
18,43°	1: 3
2o,56°	3: 8
21,8°	2: 5
23,2o°	3: 7
23,96°	4: 9
26,56°	1: 2
29,74°	4: 7
3o,96	3: 5
32,o°	5: 8
33,69°	2: 3

Angle	X:Z
35,54°	5: 7
36,87°	3: 4
38,66°	4: 5
39,8o°	5: 6
4o,6o°	6: 7
4o,19°	7: 8
41,63°	8: 9
41,99°	9:1o
45,o°	1: 1
48,81°	8: 7
49,4o°	7: 6
5o,19°	6: 5
51,34°	5: 4
52,13°	9: 7
53,13°	4: 3
54,64°	7: 5
56,61°	3: 2
58,o°	8: 5
59,o4°	5: 3

Angle	X:Z
6o,26°	7: 4
6o,95°	9: 5
63,43°	2: 1
66,o4°	9: 3
66,8o°	7: 3
68,2o°	5: 2
69,44°	8: 3
71,56°	3: 1
73,3o°	1o:3
74,o5°	7: 2
75,96°	4: 1
77,47°	9: 2
78,69°	5: 1
8o,54°	6: 1
81,87°	7: 1
82,87°	8: 1
83,66°	9: 1
84,29°	1o:1

The chart shows only the angles for the ratios X:Z = (1-1o):(1-1o). Alarm sign will appear however only if angle ratios other than X:Z = (1-39):(1-39) are programmed.

For the turning exercises we limite ourselves to ratios X:Z = (1-1o):(1-1o).

Data on angles

Example

We take for $\alpha/2$ 3o° the ratio X:Z = 3:5
($\alpha/2$ with 3:5 = 3o,96°.

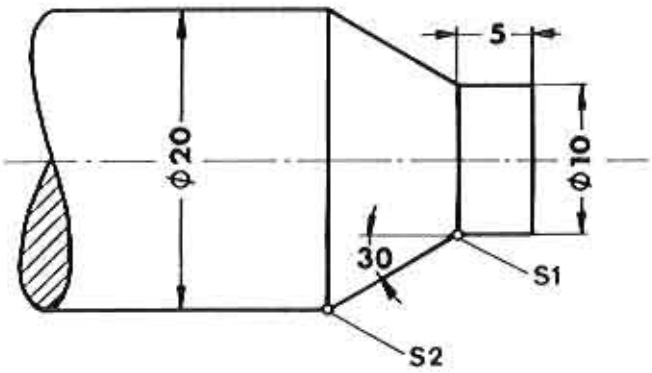

The tool bit has to traverse from points S1 to S2.

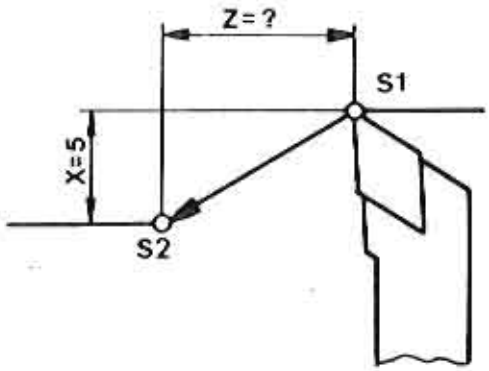

The path X is 5 mm.

The ratio X:Z = 3:5

5:3 = 1,66666..., thus not divisible.
We take the next greater number which is divisible by 3: 5.o1
5,o1 : 3 = 1,67

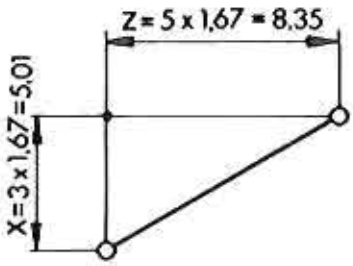

The Z-value is 5 times as large, thus 1,67 x 5 = 8,35 mm

The block for the traverse path S1 - S2 is:

N	G	X	Z	F
	01	501	-835	..

By raising the value from 5 to 5,o1, the tool bit juts out o,o1 mm in X-direction and o,o3 mm in Z-direction over the ideal point.
Please take this into consideration when programming the following blocks.

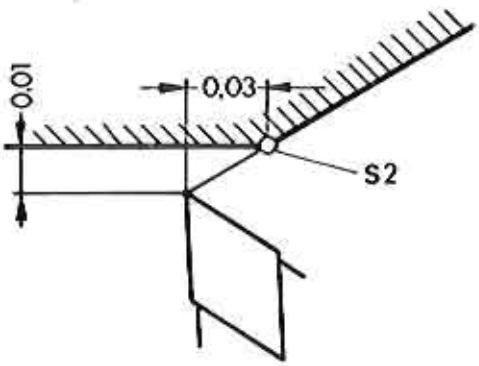

G02 – Circular Interpolation Clockwise

G03 – Circular Interpolation Counterclockwise

With the circular interpolation the circular arc is divided into single steps. It is substituted by many straight lines. Different from the linear interpolation the ratio X:Z changes here permanently.

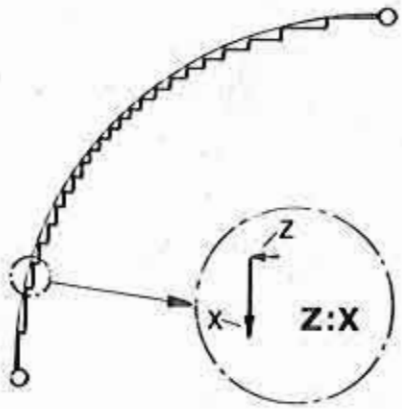

Possible radii on the COMPACT 5 CNC

.05"/ .1"/ .15"/ .2"/.25"/ ... up to 1.95"

Program input

1. Block number
2. GO2 or GO3
3. X-value in thousandth of inch. As X-value we put in the X-coordinate of the 4th part of circumference.
   The longitudinal slide moves automatically in minus-direction (direction chuck). No Z-Input
4. F-value in tenth of inch

Alarm sign A01

When input of radius is undefined (for example r=1.13 inch) the alarm sign AO1 appears.

G02 – Circular Interpolation Clockwise

G03 – Circular Interpolation Counterclockwise

With the circular interpolation the circular arc is divided into single steps. It is substituted by many straight lines. Different from the linear interpolation the ratio X:Z changes here permanently.

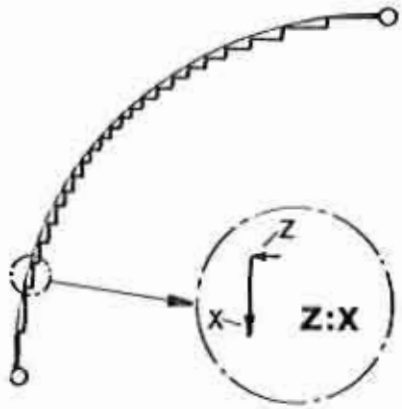

Possible radii on the COMPACT 5 CNC

o,25/o,5o/1/2/3/4/5 ... up to 59 mm

Program input

1. Block number
2. GO2 or GO3
3. X-value in hundredth of mm. As X-value we put in the X-coordinate of the 4th part of circumference.
4. Z = O. The longitudinal slide moves automatically in minus-direction (direction chuck).
5. F-value

Alarm sign A01

When input of radius is undefined (for example r = 4,5 mm) the alarm sign Aol appears.

Radii when outside turning

Radii clockwise G02

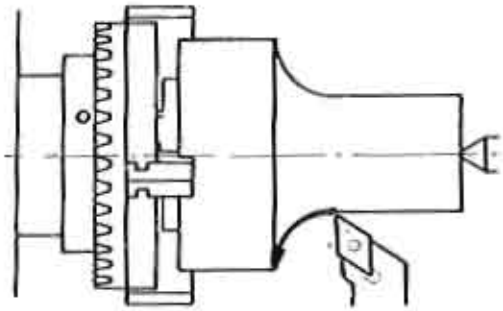

N	G	X	Z	F
	02	+		

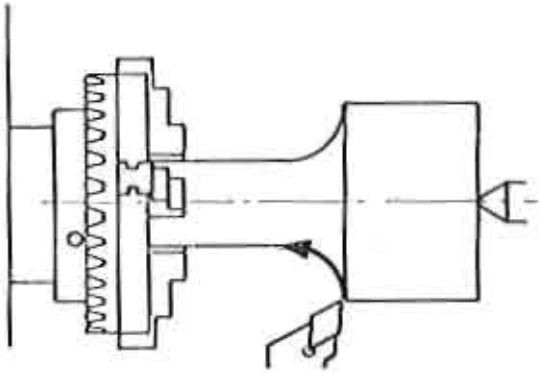

N	G	X	Z	F
	02	−		

Radii counterclockwise G03

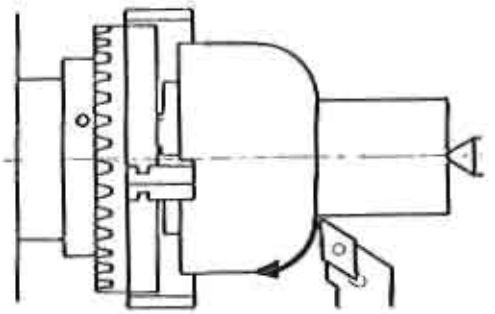

N	G	X	Z	F
	03	+		

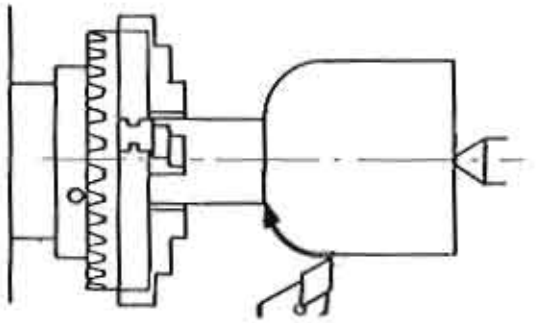

N	G	X	Z	F
	03	−		

G02 – Radii clockwise

Movement of turning tool as seen from above

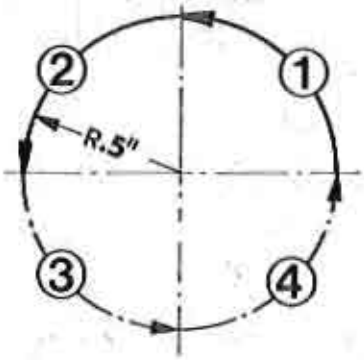

Program for fourth part of circumference 1

N	G	X	Z	F
00	02	-500		25

Fourth part of circumference 2

N	G	X	Z	F
00	02	500		25

Fourth parts of circumference 3 and 4 are not programmable since Z-direction is po sitive.

Input format G02

N../G02/X±..../F...

G03 – Radii counterclockwise

Movement of turning tool as seen from above

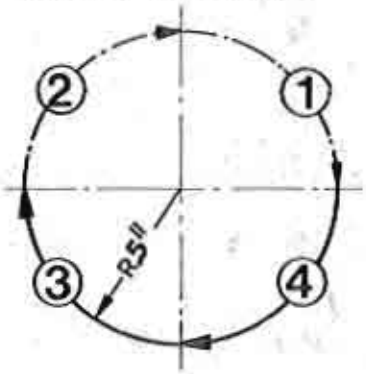

Program for fourth part of circumference 3

N	G	X	Z	F
00	03	-500		25

Program for fourth part of circumference 4

N	G	X	Z	F
00	03	500		25

Fourth parts of circumference 1 and 2 are not programmable since Z-direction is positive.

Input format G03

N../G03/X±..../F=...

G02 – Radii clockwise

Movement of turning tool as seen from above

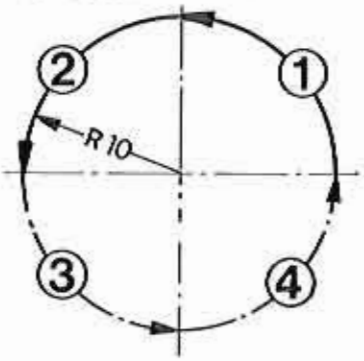

Program for fourth part of circumference 1

N	G	X	Z	F
00	02	-1000	0	100

Fourth part of circumference 2

N	G	X	Z	F
00	02	1000	0	100

Fourth parts of circumference 3 and 4 are not programmable since Z-direction is positive.

Input format G02

N../G02/X±..../F...

G03 – Radii counterclockwise

Movement of turning tool as seen from above

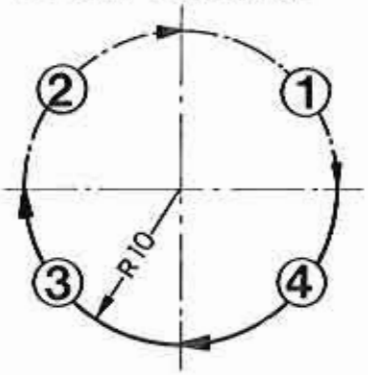

Program for fourth part of circumference 3

N	G	X	Z	F
00	03	-1000	0	100

Program for fourth part of circumference 4

N	G	X	Z	F
00	03	1000	0	100

Fourth parts of circumference 1 and 2 are not programmable since Z-direction is positive.

Input format G03

N../G03/X±..../F=...

Depth of cut when turning radii

You turn a radius with the right hand side tool. $\delta\varrho = 93^{\circ}$

You have seen that with outside turning (as with facing) the max. depth of cut is .012". When turning a radius you find a similar situation, either at the beginning or at the end of the fourth part of circumference.

Exercise:

Follow with the transparent paper (right hand side tool) M10:1 the indicated radius. You will recognize the changing situation immediately.

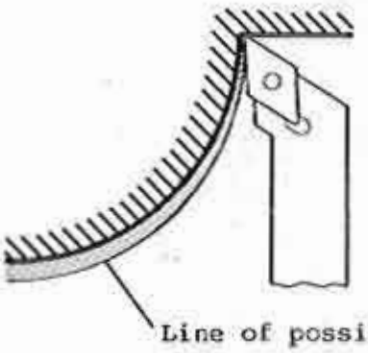

G02

Max. depth of cut of .012" only at the begin at 93°.

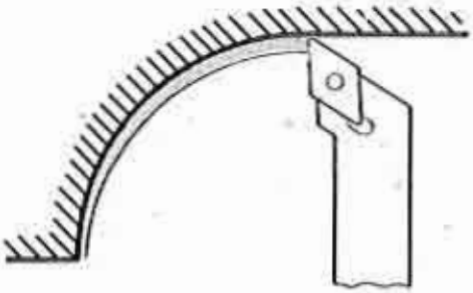

G03

Max. depth of cut .012" only at the end of radius at 93°.

Depth of cut when turning radii

You turn a radius with the right hand side tool. $\varkappa = 93^{o}$

You have seen that with outside turning (as with facing) the max. depth of cut is o,3 mm. When turning a radius you find a similar situation, either at the beginning or at the end of the fourth part of circumference.

Exercise:

Follow with the transparent paper (right hand side tool) M1o:1 the indicated radius. You will recognize the changing situation immediately.

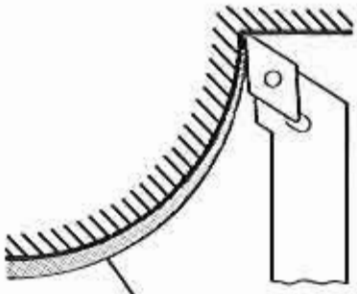

Line of possible depth of cut

GO2

Max. depth of cut of o,3 mm only at the begin at 93°.

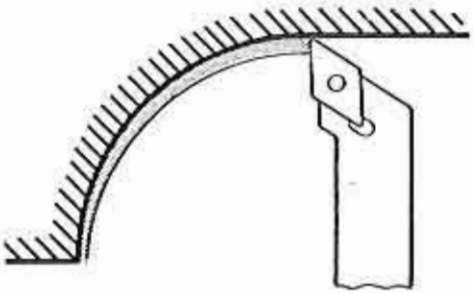

GO3

Max. depth of cut of o,o3 mm only at the end of radius at 93°.

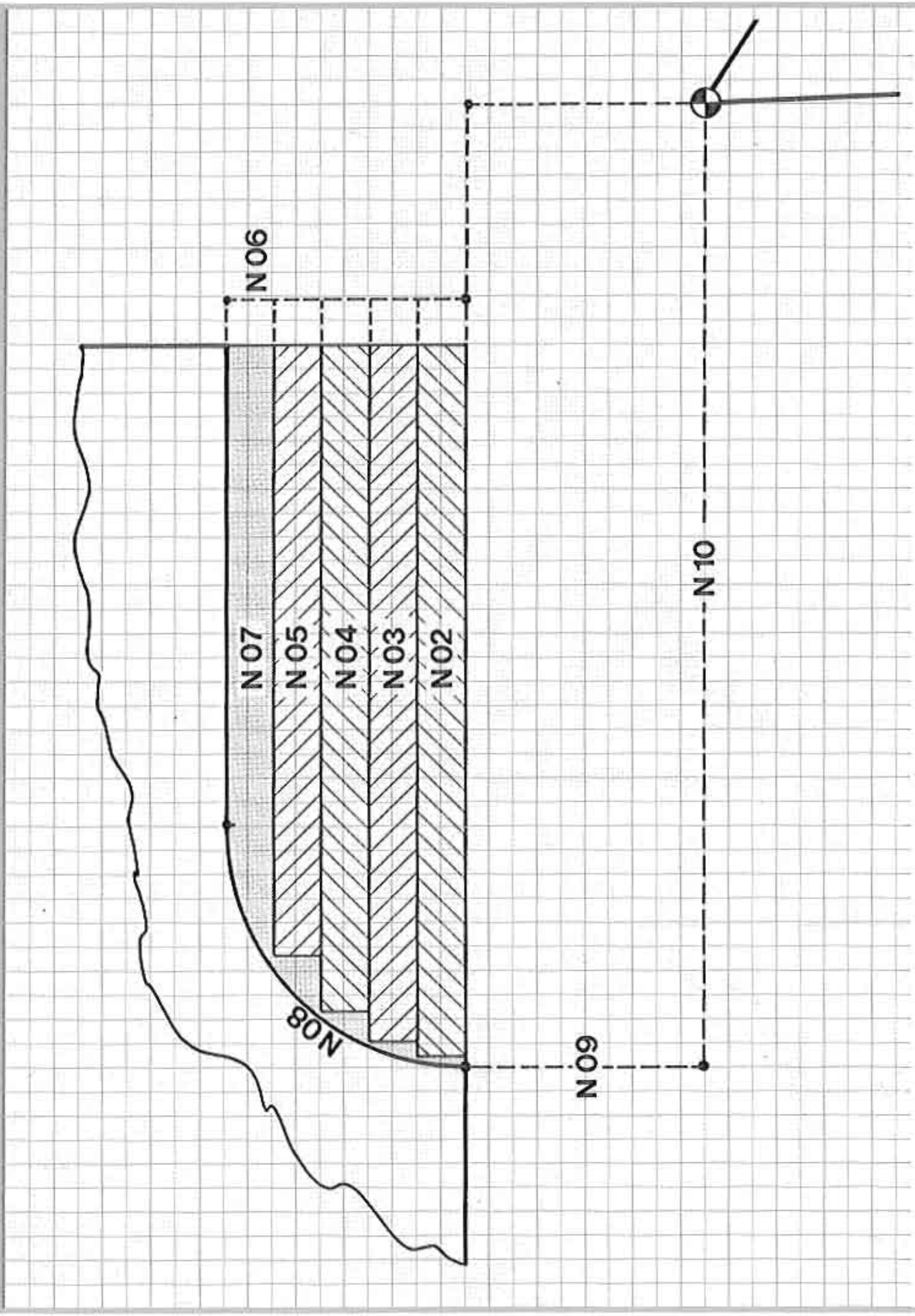
N 06
N 07
N 05
N 04
N 03
N 02
N 08
N 09
N 10

Example G02

Material: Aluminium
Starting position of turning tool as in drawing.

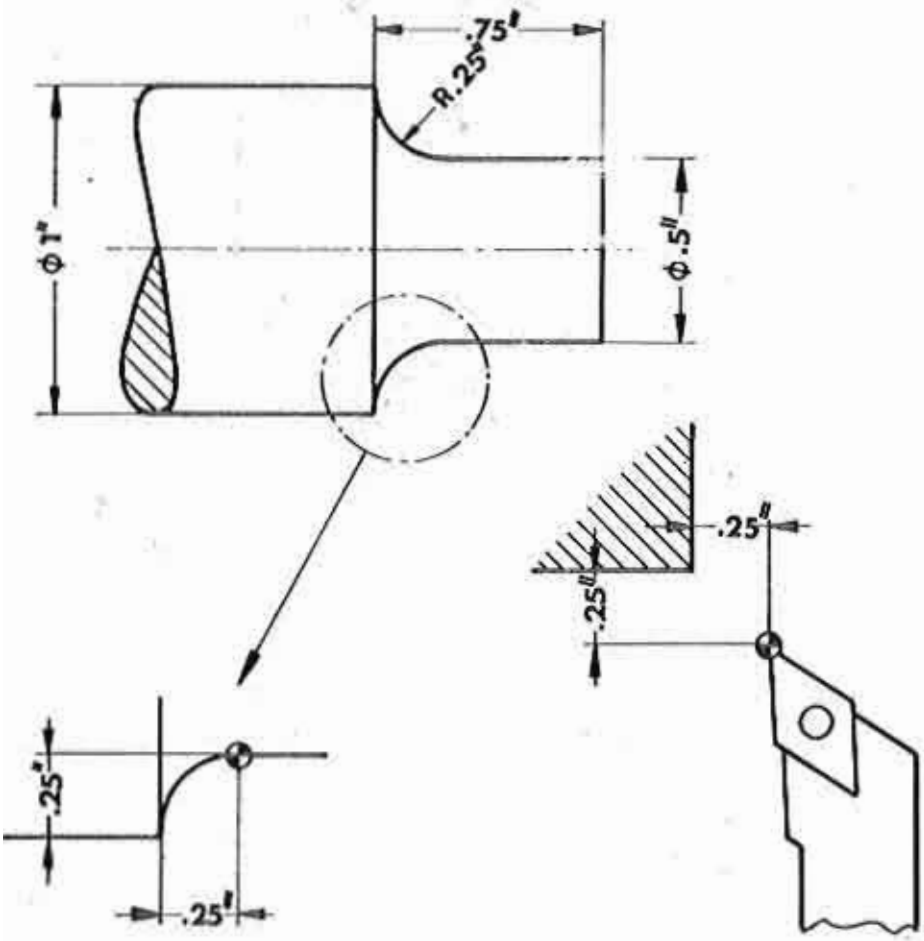

N	G	X	Z	F
00	00	-250		
01	00	0	-200	
02	84	-50	-785	25
03	84	-100	-760	25
04	84	-150	-735	25
05	84	-200	-675	25
06	00	-250		
07	01	0	-550	25
08	02	250		25
09	00	250		
10	00	0	1000	
11	22			

Example G02

Material: Aluminium
Starting position of turning tool as in drawing.

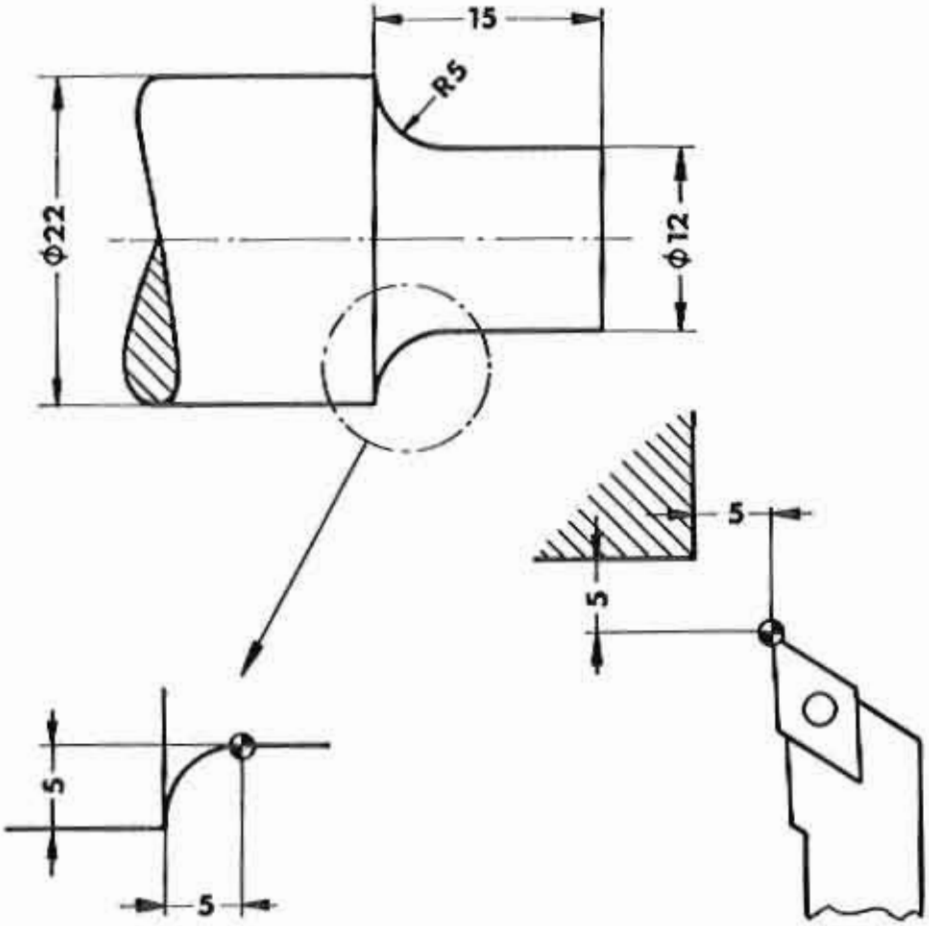

N	G	X	Z	F
00	00	-500		
01	00	0	-400	
02	84	-100	-1570	80
03	84	-200	-1540	80
04	84	-300	-1480	80
05	84	-400	-1360	80
06	00	-500		
07	01	0	-1100	80
08	02	500		80
09	00	500		
10	00	0	2000	
11	22			

Programming exercise G02/G03

Material: Aluminium
Program this exercise such that you finish it with one final cut. Starting position of tool bit as in drawing. Position of tool bit at end of program to be identical with starting position.

Make a drawing M 10:1.

Tool: right hand side tool

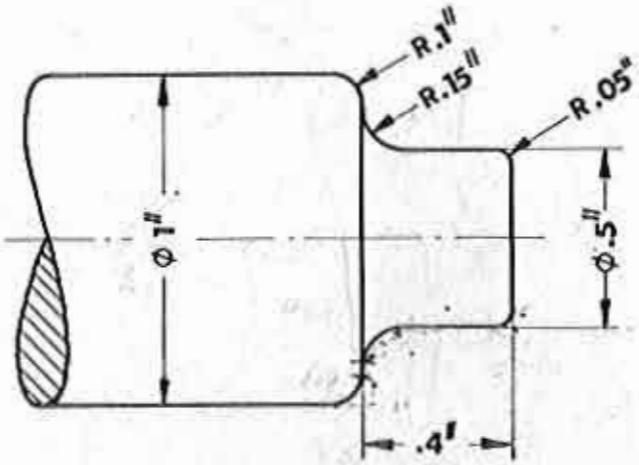

N	G	X	Z	F

Start position

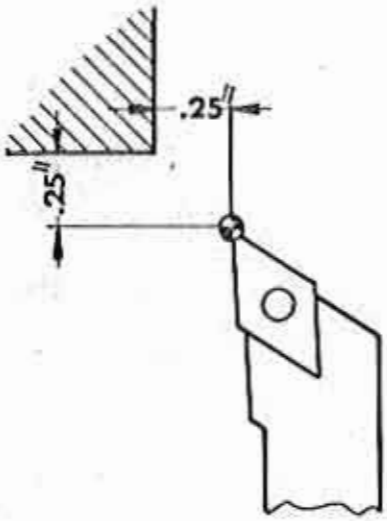

Programming exercise G02/G03

Material: Aluminium
Program this exercise such that you finish it with one final cut. Starting position of tool bit as in drawing. Position of tool bit at end of program to be identical with starting position.

Make a drawing M 10:1.

Tool: right hand side tool

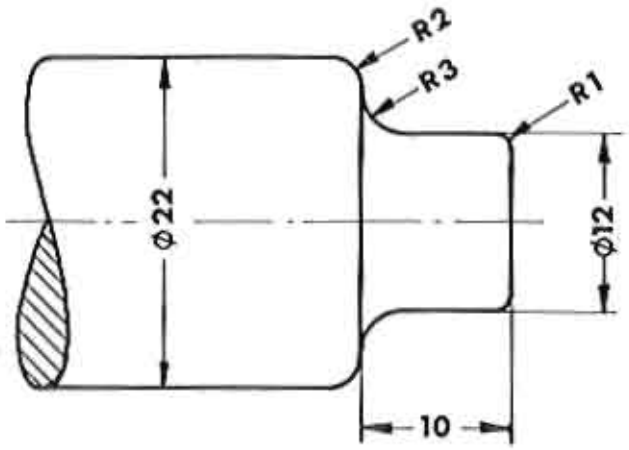

N	G	X	Z	F

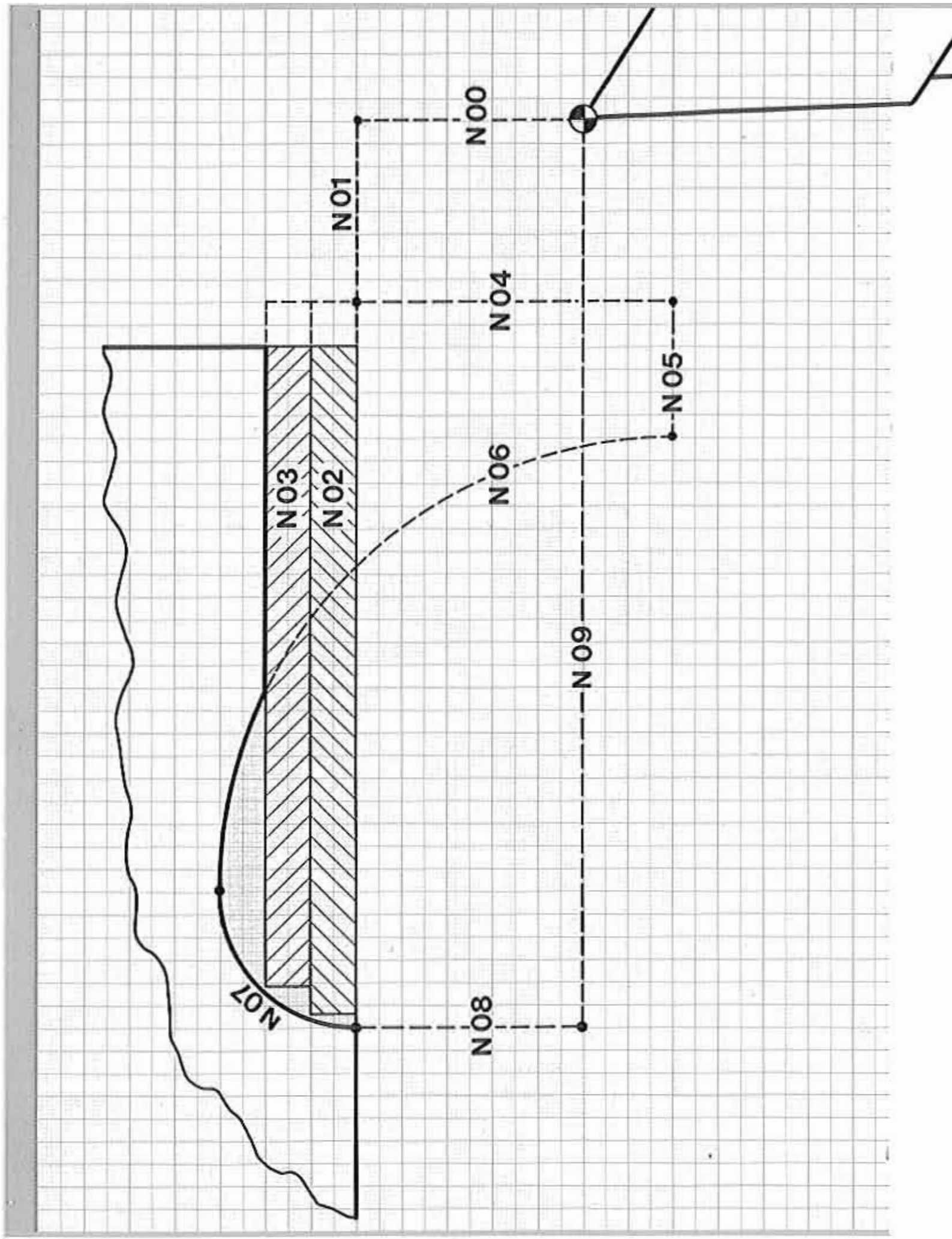
N 00
N 01
N 04
N 05
N 06
N 03
N 02
N 09
N 07
N 08

Example G02/G03

Turning of intersected and combined radii.

Remark:

The tool bit always executes the movement of a fourth part of circumference.

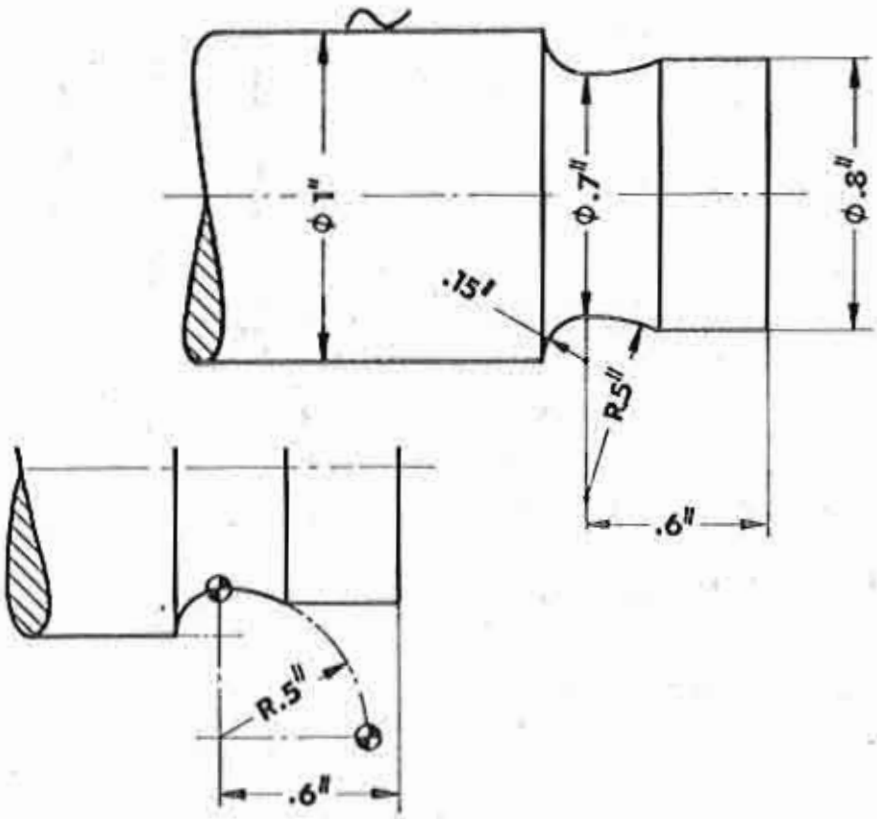

Start position

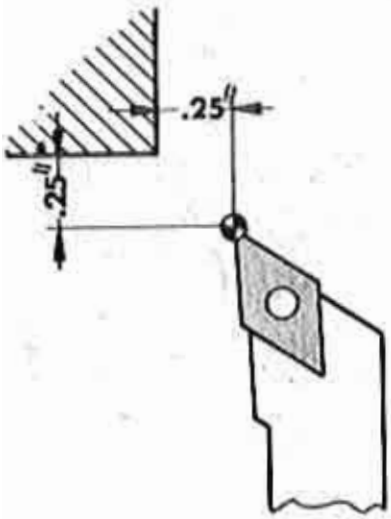

N	G	X	Z	F
00	00	-250		
01	00	0	-200	
02	84	-50	-785	25
03	84	-100	-755	25
04	00	+350		
05	00	0	-150	
06	02	-500		25
07	02	+150		25
08	00	+250		
09	00	0	+1000	
10	22			

Example G02/G03

Turning of intersected and combined radii.

Remark:

The tool bit always executes the movement of a fourth part of circumference.

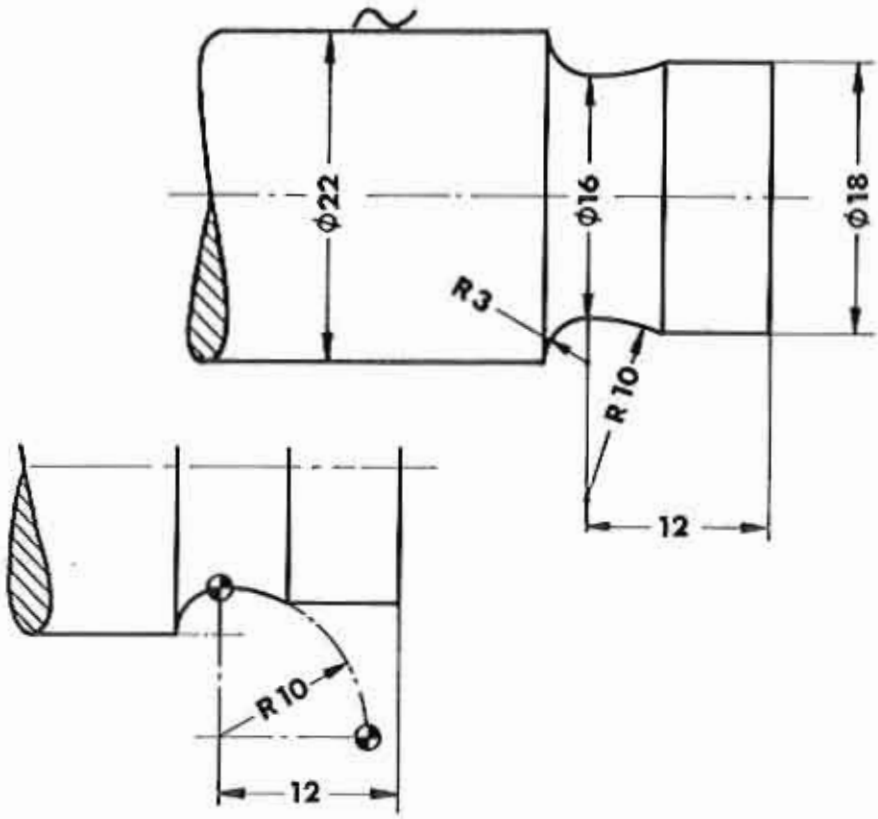

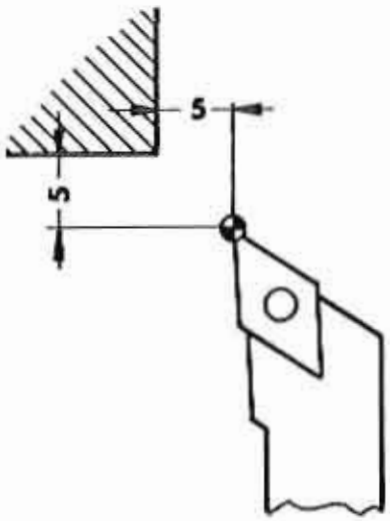

N	G	X	Z	F
00	00	-500		
01	00	0	-400	
02	84	-100	-1570	80
03	84	-200	-1510	80
04	00	700		
05	00	0	-300	
06	02	-1000		80
07	02	300		80
08	00	500		
09	00	0	2000	
10	22			

Thread Cutting on the COMPACT 5 CNC

On the Compact 5 CNC you cut left hand and right hand threads, inside and outside.

Possible pitches

.001"- .199"in steps of .001"

Main spindle speeds when thread cutting

These are limited. If the main spindle speed is too fast, the feed drives will be inactive and cannot be synchronized with the main spindle speed any more.

Therefore better program G20 before thread-cutting so you can slow down the main spindle speed, if necessary. If the speed is too high, there will be alarm indication.

Max. spindle speed in relation to pitch (approximate values)

TPI	Pitch in inch	Max. spindle speed (1/min)
1000 - 25	.001 - .040	300
25 - 16	.041 - .060	200
16 - 12	.061 - .080	180
12 - 8	.081 - .120	130
8 - 6	.121 - .199	70

Alarm sign A06

When you surpass the spindle speed by more than 5 %, the alarm sign appears.

Thread Cutting on the COMPACT 5 CNC

On the Compact 5 CNC you cut left hand and right hand threads, inside and outside.

Possible pitches

o,o1 - 4,99 in steps of o,o1 mm

Main spindle speeds when thread cutting

These are limited. If the main spindle speed is too fast, the feed drives will be inactive and cannot be synchronized with the main spindle speed any more.

Therefore better program G20 before thread-cutting so you can slow down the main spindle speed, if necessary. If the speed is too high, there will be alarm indication.

Max. spindle speed in relation to pitch

Pitch in mm	Max. spindle speed (1/min)
o,o1 - 1	3oo
1,o1 - 1,5	2oo
1,51 - 2	18o
2,o1 - 3	13o
3,o1 - 4,99	7o

Alarm sign A06

When you surpass the spindle speed by more than 5 %, the alarm sign appears.

UNR Bolt Threads

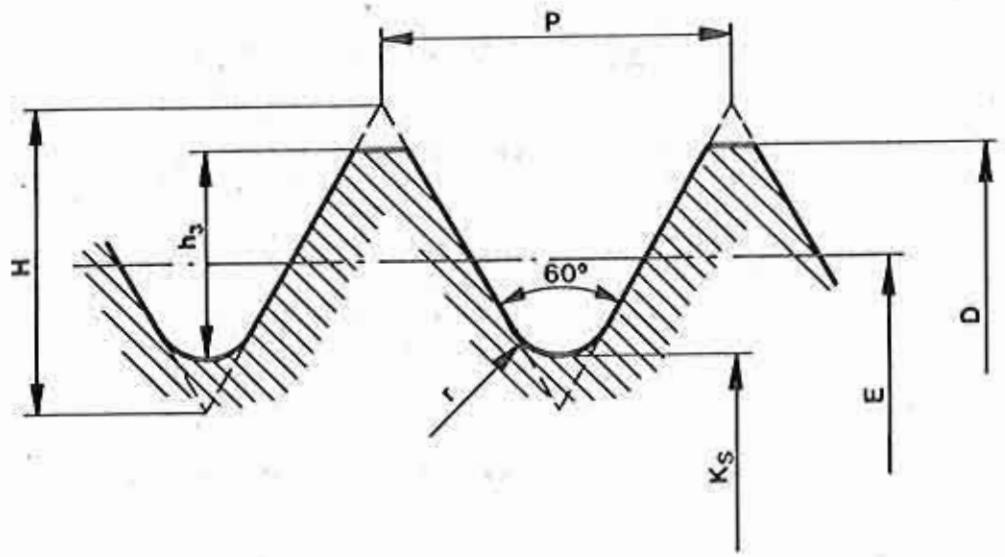

As an example for inch threads we have a look to the UNR threads.
The pitch is specified by the number of threads per inch.

Calculation of pitch:

Thread UNRC size 12 has 24 threads per inch:

$$\text{Pitch} = \frac{1 \text{ inch}}{24} = .04167''$$

The geometrical shapes and dimensions are standardized and can be found in technical handbooks.

Example: Designations and dimension of an URR bolt thread.

D = Basic major diameter
E = Basic pitch diameter
K_S= Minor diameter for external thread
r = Root radius
H = Height of sharp U-thread
P = Pitch
h_3= Depth of external thread

The Values / Calculation

D and corresponding pitch are given for the relative threads.

h_3 is $\frac{D-K_S}{2}$ or .61343 x Pitch

r = .14434 x Pitch

H = .86603 x Pitch

As the root radius r is dependent on the pitch (r = .14434 x pitch), for every pitch a certain root radius has to be considered.

Determination of a Thread

Screws, nuts, machine parts can be exchanged.

This is possible because of standardization

- of quality standards
- of special inspection procedures
- of standards on the denomination of thread types

As example we use in the following the metric ISO standard thread according to DIN 13.

(ISO = International Standard Organisation). DIN = German Industrial Standard)

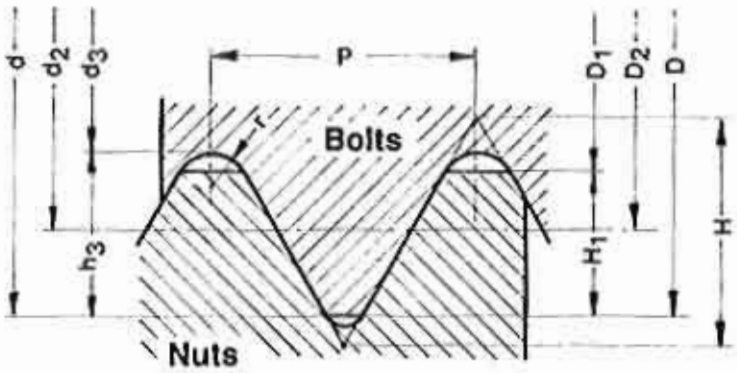

P = Pitch of thread
d = Outside diameter of bolt
D = d= Nominal diameter for bolt and nut
d2 = D2= Thread pitch diameter for bolt and nut
d3 = Minor thread diameter of bolt
D1 = Minor thread diameter of nut
H = Height of profile = height of fictitions profile triangle (with rounding and leveling)
h3 = Depth of thread of bolt = 1/2 (d-d3)
r = Rounding radius = H/6 = o,14434 P
H1 = Bearing depth

H = o,866o3 P
h3 = o,61343 P
H1 = o,54127 P
3 = H/6 = o,14434 P

} Calculated values

UNRF Thread

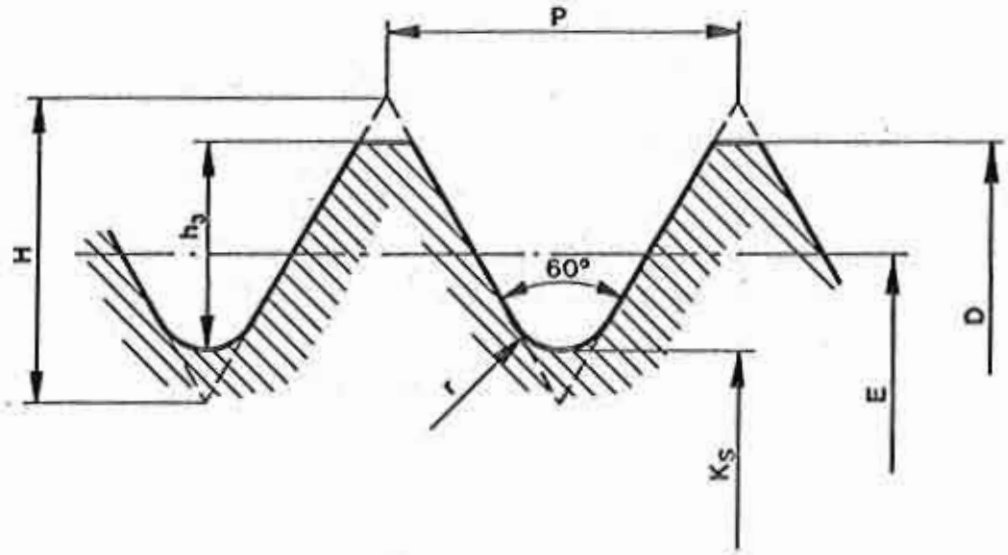

Sizes	Basic Major Diam.,	Thds. per Inch.	Basic Pitch Diam.,	Minor Diameter		Root Radius	Pitch
				Ext. Thds.	Int. Thds.		
	Inches		Inches	Inches	Inches	Inches	Inches
4(.112)	0.1120	48	0.0985	0.0864	0.0894	0.0030	0.0208
5(.125)	0.1250	44	0.1102	0.0971	0.1004	0.0033	0.0227
6(.138)	0.1380	40	0.1218	0.1073	0.1109	0.0036	0.0250
8(.164)	0.1640	36	0.1460	0.1299	0.1339	0.0040	0.0278
10(.190)	0.1900	32	0.1697	0.1517	0.1562	0.0045	0.0312
12(.216)*	0.2160	28	0.1928	0.1722	0.1773	0.0051	0.0357
1/4	0.2500	28	0.2268	0.2062	0.2113	0.0051	0.0357
5/16	0.3125	24	0.2854	0.2614	0.2674	0.0060	0.0417
3/8	0.3750	24	0.3479	0.3239	0.3299	0.0060	0.0417
7/16	0.4375	20	0.4050	0.3762	0.3834	0.0072	0.0500
1/2	0.5000	20	0.4675	0.4387	0.4459	0.0072	0.0500
9/16	0.5625	18	0.5264	0.4943	0.5024	0.0080	0.0556
5/8	0.6250	18	0.5889	0.5568	0.5649	0.0080	0.0556
3/4	0.7500	16	0.7094	0.6733	0.6823	0.0090	0.0625
7/8	0.8750	14	0.8286	0.7874	0.7977	0.0103	0.0714

You see that to each pitch there belongs a rounding radius r. That means: for each pitch you need a thread-cutting tool.

Metric ISO – Standard threads according to DIN 13

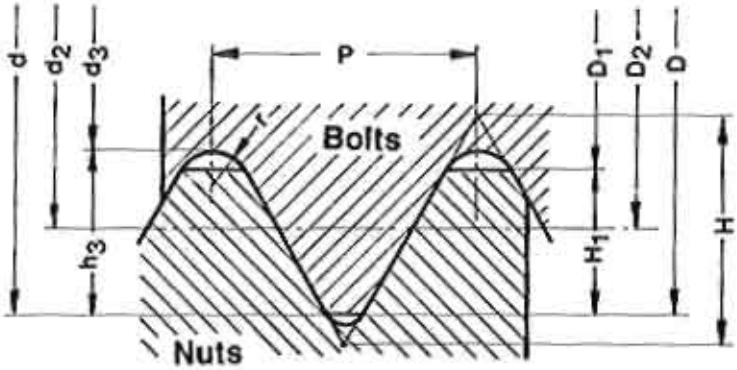

Thread - Nominal dia. d=D	Pitch P	Thread pitch dia. d2=D2	Minor thread dia. d3	Minor thread dia. D1	Depth of thread h3	Depth of thread H1	Rounding radius r
3	o,5	2,675	2,387	2,459	o,3o7	o,271	o,o72
4	o,7	3,545	3,141	3,242	o,429	o,379	o,1o1
5	o,8	4,48o	4,o19	4,134	o,491	o,433	o,115
6	1,o	5,35o	4,773	4,917	o,613	o,541	o,144
8	1,25	7,188	6,466	6,647	o,767	o,677	o,18o
1o	1,5	9,o26	8,16o	8,376	o,92o	o,812	o,217
12	1,75	1o,863	9,853	1o,1o6	1,o74	o,947	o,253
16	2,o	14,7o1	13,546	13,835	1,227	1,o83	o,289
2o	2,5	18,376	16,933	17,294	1,534	1,353	o,361
.	.	.	.	.	.	.	.
.	.	.	.	.	.	.	.
.	.	.	.	.	.	.	.

You see that to each pitch there belongs a rounding radius r. That means: for each pitch you need a thread-cutting tool.

Indexable tips for threading

1. Full profile tips

With the full profile tips you cut the correct thread profile. You need
- for each thread profile and
- for each pitch

a seperate tip.

The outside diameter will also be calibrated.

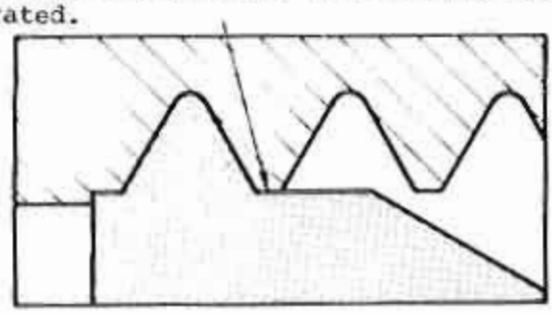

2. Partial profile tips

Advantage:
When using partial profile tips, you can use on tips for various pitches within a certain range of pitches.

Disadvantage:
The rounding radius is not according to standard.

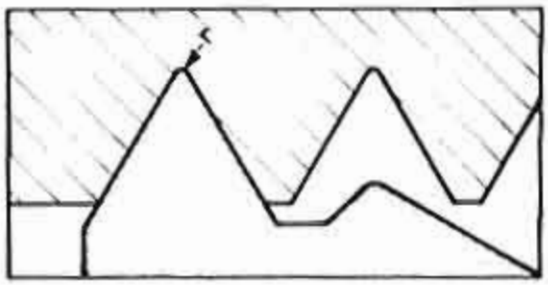

On the COMPACT 5 CNC we use part profile tips, to enable us to thread-cut within a certain range of pitches.

The toolholder for external threading (order no. 260 620)

The indexable tips for right hand threading (order no. 260 621)

Calculation of Infeed

h_3 with full profile tips:

$= .61343 \times \text{Pitch}$

$= \frac{\text{Basic Major Dia} - \text{Minor Dia}}{2}$

$= \frac{D - Ks}{2}$

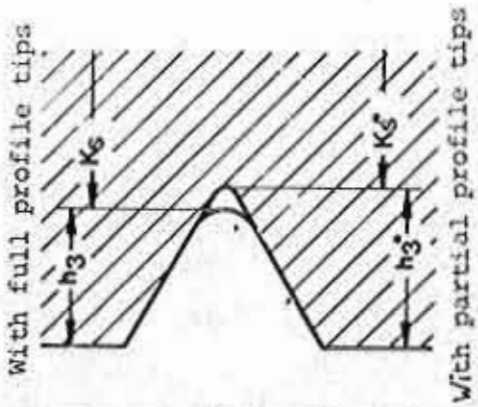

h_3^* with partial profile tips:

$= .75777 \times \text{Pitch} - r$

r = Radius of tool bit nose

The indexable tip is a partial profile tip. It can be used for pitches from o,5 to 1.5mm and for 16 - 48 threads per inch (TPI).
Thread angle = 6o°
Rounding radius r = .oo16 (o,o4mm)
That means: the minor thread diameter Ks will change for the relative pitch.

depth of thread

Threads per Inch	Pitch (inch)	Infeed h3 with profile tool (inch)	Infeed with o.oo16" radius tool (inch)	Suggested Minimum No. of rough passes
48	o.o2o8	o.o128	o.o142	4
44	o.o227	o.o139	o.o156	4
4o	o.o25o	o.o153	o.o173	5
36	o.o278	o.o17o	o.o195	5
32	o.o312	o.o192	o.o22o	5
28	o.o357	o.o219	o.o255	5
24	o.o417	o.o256	o.o3oo	6
2o	o.o5oo	o.o3o7	o.o363	7
18	o.o556	o.o341	o.o4o5	7
16	o.o625	o.o383	o.o458	8

The toolholder for external threading (order no. 260 620)

The indexable tips for right hand threading (order no. 260 621)

The indexable tip is a partial profile tip. It can be used for pitches from o,5 to 1,5 mm and for 16 - 48 threads per inch (TPI).
Thread angle = 6o°
Rounding radius r = o,o4 - o,o45 mm
That means: the minor thread diameter d3 will change for the relative pitch, when compared to ISO-standard.
The depth of thread $\frac{d - d3}{2}$ = h3 is bigger.

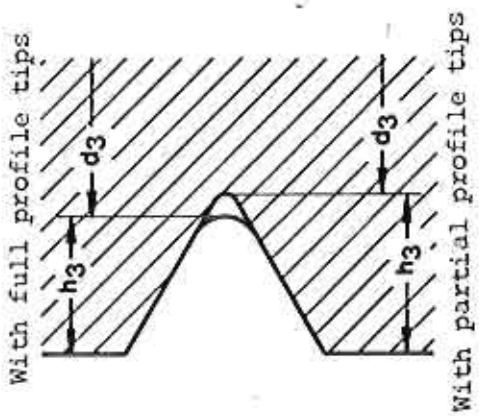

Pitch P (mm)	h3 acc. ISO, DIN13 (top radius changes with every pitch)	h3 when using tip with top radius o,o4 mm
o,5	o,3o7	o,337
o,6	o,368	o,415
o,7	o,429	o,49o
o,75	o,46o	o,528
o,8	o,491	o,551
1,o	o,613	o,717
1,25	o,767	o,9o7
1,5	o,92o	1,1oo

Synchronisation

Main spindle speed - Feed when thread cutting

Conventional lathe

With a conventional lathe, the drive of the leadscrew comes via a gear wheel on the main spindle, via change gears, via the feed gearbox onto the leadscrew. There is a closed mechanical circuit of force. If the main spindle moves slower (e.g. because of heavier load), then the leadscrew will turn slower as well. The thread-cutting pitch however remains the same.

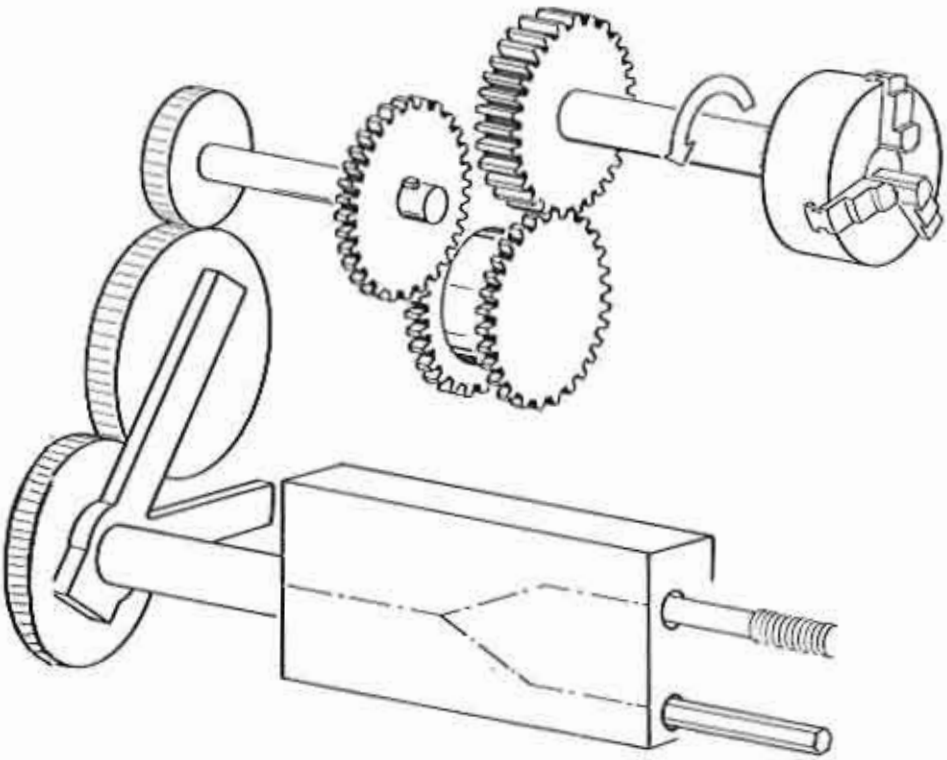

Synchronisation

Main spindle drive - Feed size when thread-cutting on the COMPACT 5 CNC.

Main spindle and feed drive are not frictionally connected. The synchronisation is effected via the computer.

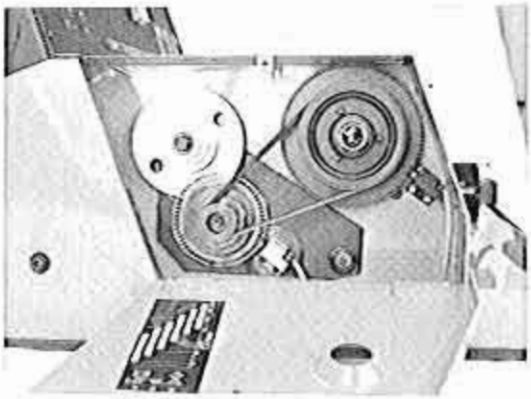

Principle

1. The impulse sender 1 gets the revolutions of the main spindle from the perforated disc and transmits it to the computer. Here it is processed, and from that information it determines the feed required to obtain the programmed thread pitch.
   The result is transformed into an instruction immediately and given to the feed motors.

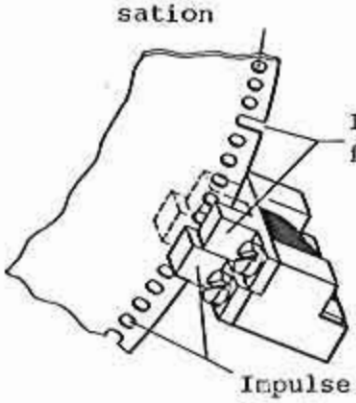

2. A thread is always cut in a few cycles. You remember that you had to observe with conventional lathes: may I open the half-nut at this pitch and how do I get back to the same position?

   CNC-Machine

   The start instruction for the feed has to be always at same angle position of the main spindle.
   The perforation on the disc transmits via the impulse sender the angle position to the computer. The latter one gives the start instruction to the stepping motor of the longitudinal slide.

Summary Synchronisation

1. The feed rate is controlled via the perforated disc on the main spindle.

2. The perforation of the discs transmits the angle position of the main spindle and initiates the start instruction to the stepping motor of the longitudinal slide, thus the tool bit always returns to correct position for next cut.

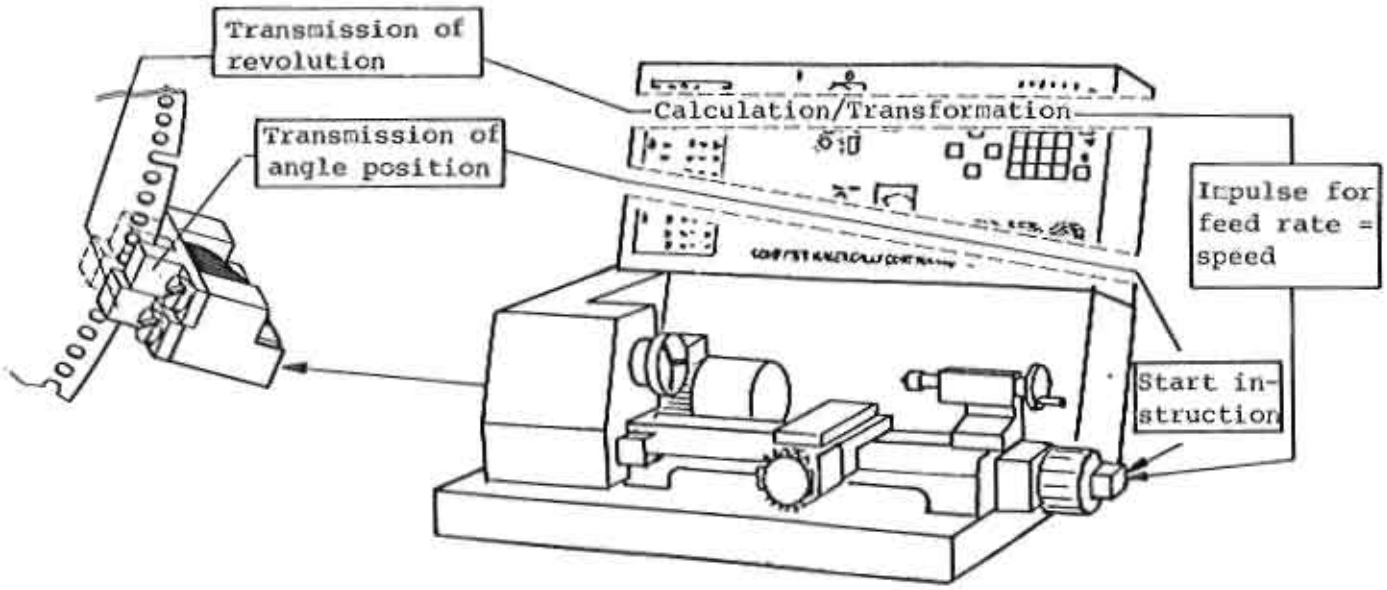

G33 – Threading with Constant Pitch

Example:
Right thread
2o tpi
Pitch = $\frac{1}{2o}$ = .050"

Length of thread .5"

Inputs G33

1. Block number N
2. G33
3. X = O
4. Length of thread in column Z in thousandth of inch
   +Z = Right hand thread
   -Z = Left hand thread
5. In column F, thread pitch in thousandth of inch

N	G	X	Z	F
:				
:				
05	20			
06	33		600	50

Input format G33

N../G33/Z±...../F...

Technique of threading

The tool bit has to be fed in steps by measurement h3.

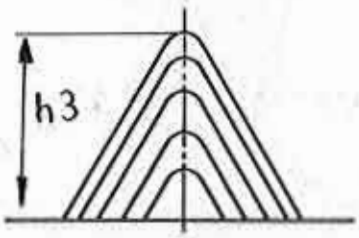

1. Feed in only in X-axis:

First cut with depth of .008"
Further cuts at .004"
Last cut at .002"

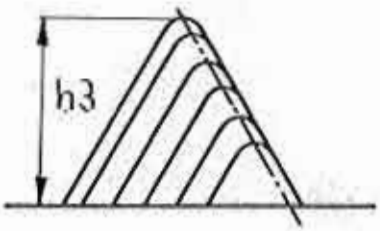

2. Feed in X- and Z-axis:

G33 – Threading with Constant Pitch

Example:

Length of thread 12,5 mm
Pitch o,75 mm

N	G	X	Z	F
:				
:				
05	20			
06	33		1250	75

Inputs G33

1. Block number N
2. G33
3. X = O
4. Length of thread in column Z in hundredth of mm
   +Z = Right hand thread
   -Z = Left hand thread
5. In column F, thread pitch in hundredth of mm.

Input format G33

N../G33/Z±...../F...

Technique of threading

The tool bit has to be fed in steps by measurement h3.

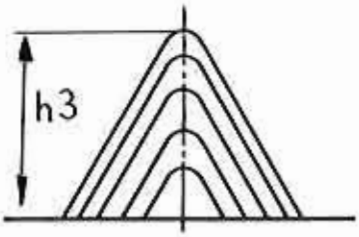

1. Feed in only in X-axis:

First cut with depth of o,2 mm
Further cuts at o,1 mm
Last cut at o,o5 mm

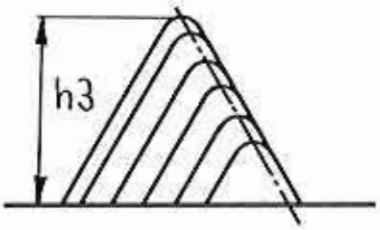

2. Feed in X- and Z-axis:

Threading with G33

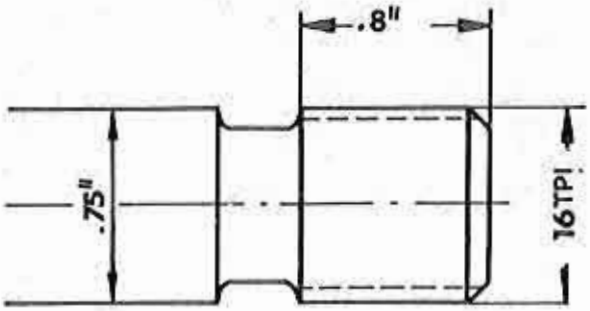

Example:

UNF thread
Size 3/4"
16 threads per inch
Pitch = $\frac{1}{16}$ = .0625"
infeed with partial profile
tool r =0.04mm = .0016" : h_3 = .0458"

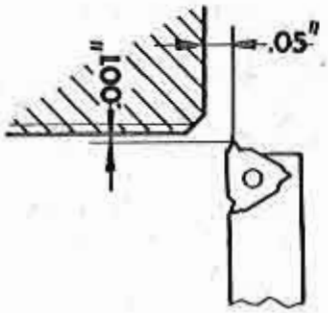

We assume that clearance cut and chamfer are already done, threading tool is at a distance of .o5" to the facing side and .o1" to outside of workpiece.
Since turning tool will have to be changed as well as main spindle speed, the block before the threading itself must be N../G=20 (dwell). We assume this block carries the number 11.

N=12 Positioning .010 with rapid traverse
N=13 First cut (Depth of cut .009")
N=14 Repositioning with rapid traverse
N=15 Repositioning with rapid traverse
N=16 Positioning .014" with rapid traverse;
(Programmed cutting depth .oo5")

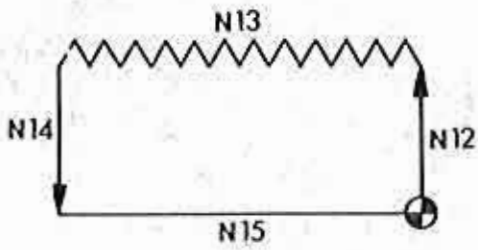

N	G	X	Z	F	E
⋮					
11	20				
12	00	-10			
13	33		-900	62	
14	00	10			
15	00	0	900		

For one cut 4 blocks have to be programmed. A very time consuming programming. Therefore you use cycle G78 for threading.

Threading with G33

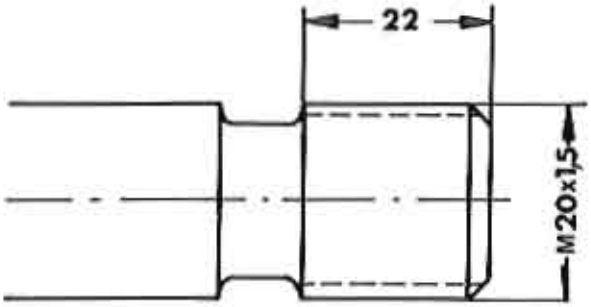

Example:

Fine threading according to ISO
M2o x 1,5

d = 2o mm
α = 6o°
P = 1,5 mm
h3 = 1,1 mm (depth of thread)

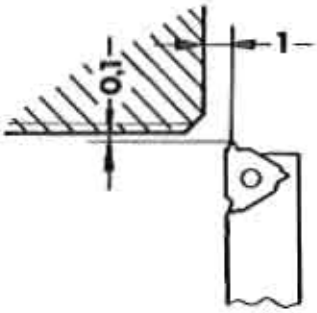

We assume that clearance cut and chamfer are already done, threading tool is at a distance of 1 mm to the facing side and o,1 mm to outside of workpiece.
Since turning tool will have to be changed as well as main spindle speed, the block before the threading itself must be N../G=2o (dwell). We assume this block carries the number 11.

N12 = Positioning o,3 mm with rapid traverse
N13 = First cut
N14 = Repositioning with rapid traverse
N15 = Repositioning with rapid traverse
N16 = Positioning o,3 mm with rapid traverse, etc.

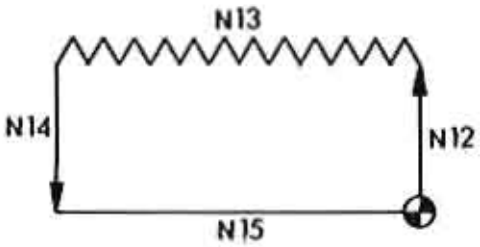

N	G	X	Z	F	E
⋮					
11	20				
12	00	-30			
13	33		-2400	150	
14	00	+30			
15	00	0	+2400		

For one cut 4 blocks have to be programmed. A very time consuming programming. Therefore you use cycle G78 for threading.

Threading Cycle G78

As with the cycles for longitudinal turning also with the threading cycle 4 single steps are put together in one block.

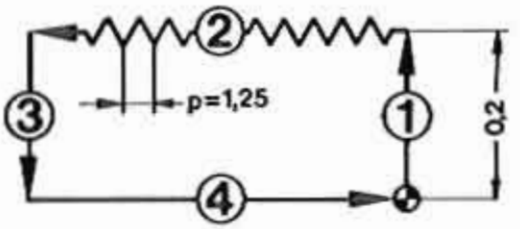

N	G	X	Z	F
..	78	-20	....	...

Programming:

Step 1:

Enter the feed in value in the X-column.

Step 2:

- Enter the thread length in the Z-column.
- Enter the pitch in hundredth of mm in the F-column.

Steps 3 + 4:

The repositioning of the tool bit to the starting point is done automatically.

Input format G78

N../G78/X±..../Z±...../F.../

The speeds for the 4 steps

Step 1: Programmed thread pitch

Step 2: Programmed thread pitch

Step 3: Programmed thread pitch

Step 4: Rapid traverse

Possible cycles

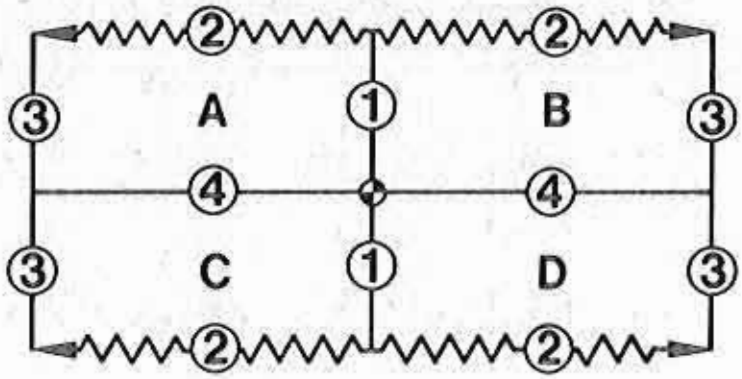

A Right hand thread, external

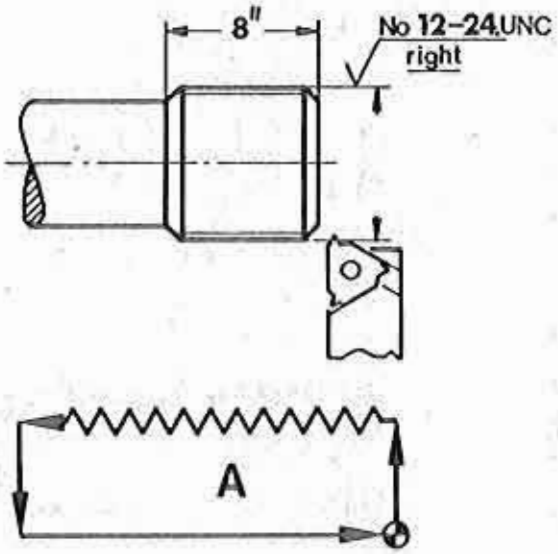

Program for one cycle

N	G	X	Z	F
..	78	-10	-900	42

Input format G78

N../G78/X = – ..../
Z = – ...../F = ...

B Left hand thread, external

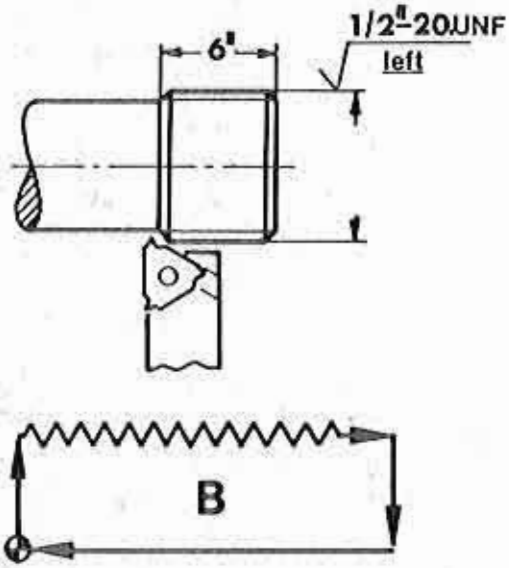

Program for one cycle

N	G	X	Z	F
..	78	-10	+700	50

Input format G78

N../G78/X = – ..../
Z = + .../F = ...

Possible cycles

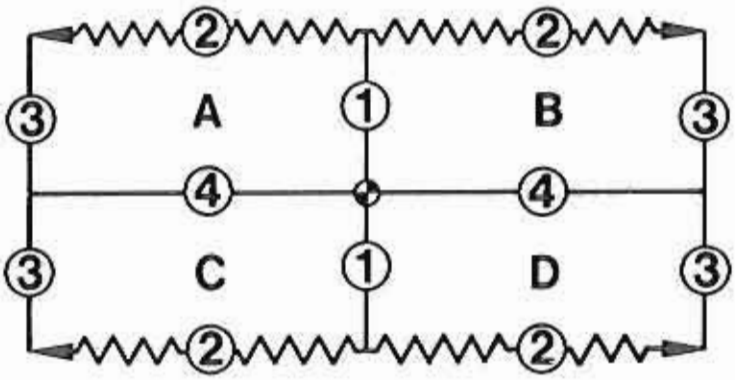

A Right hand thread, external

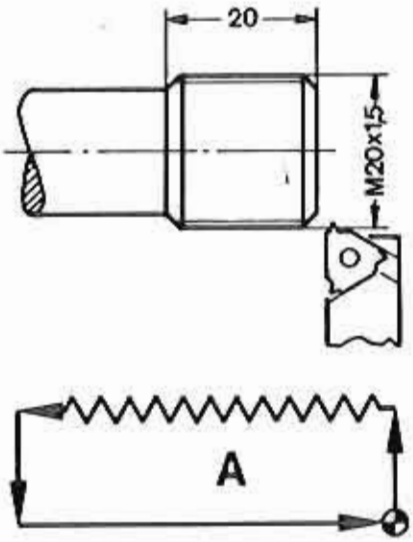

Program for one cycle

N	G	X	Z	F
..	78	-2o	-22oo	15o

Input format G78

N../G78/X = – ..../
Z = – ...../F = ...

B Left hand thread, external

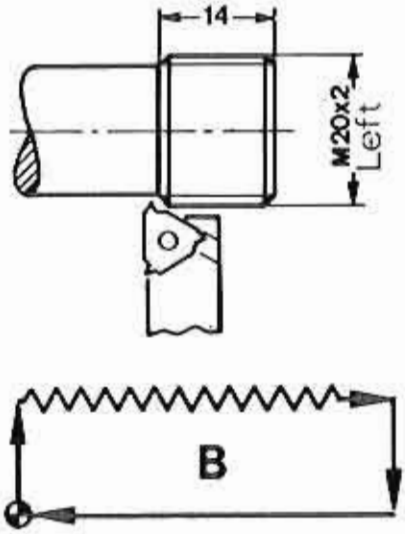

Program for one cycle

N	G	X	Z	F
..	78	-2o	+16oo	2oo

Input format G78

N../G78/X = – ..../
Z = + .../F = ...

C Internal thread, right hand

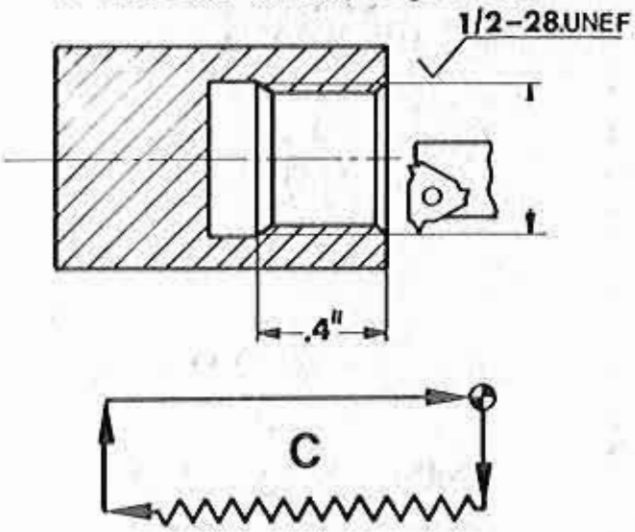

1/28 = .03571"

Program for one cycle

N	G	X	Z	F
..	78	10	-500	36

Input format G78

N../G78/X = + .../

D Internal thread, left hand

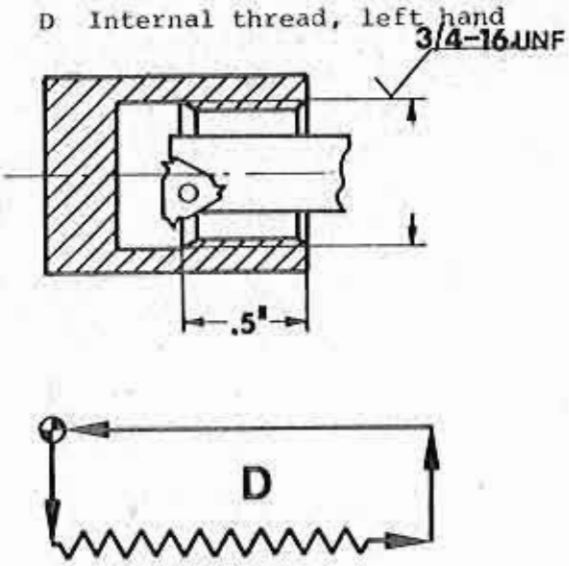

1/16 = .0625"

Program for the first cycle.

N	G	X	Z	F
..	78	10	600	62

Input format G78

N../G78/X = + .../

TECHNIQUE OF THREADING

Tool bit position at start of cycle G78

1. Choose zero-point of cycle such that you keep a little distance to the end of the workpiece.

2. The zero-point of cycle should neither be to close to the surface of the workpiece. It could scratch on the surface when moving back to the starting position (step 4).
   So choose the zero-point of cycle at o,1 mm distance to the surface.

C Internal thread, right hand

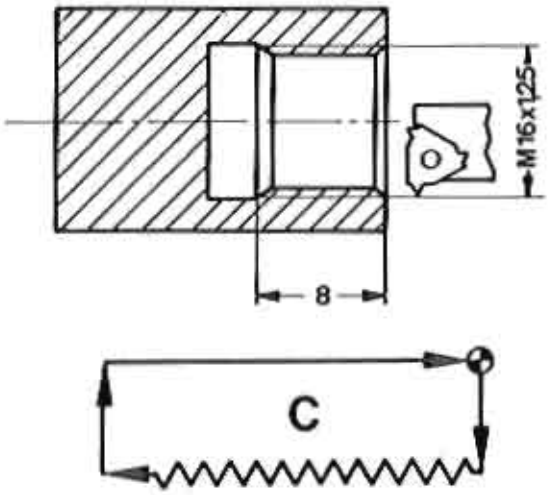

Program for one cycle

N	G	X	Z	F
..	78	+2o	-1ooo	125

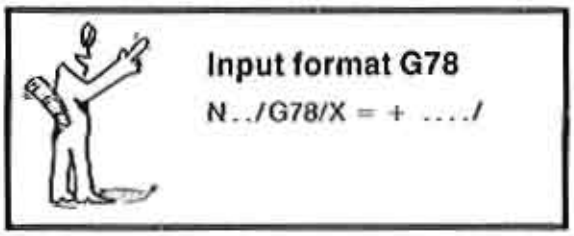

D Internal thread, left hand

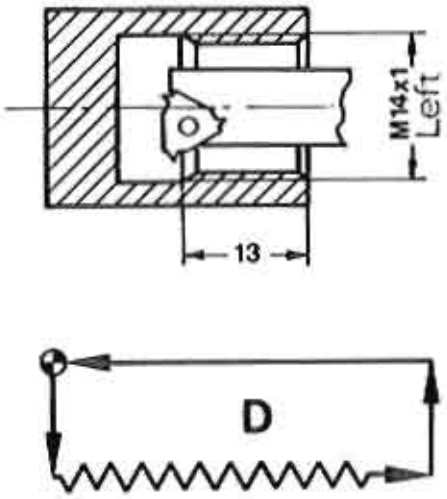

Program for the first cycle.

N	G	X	Z	F
..	78	+2o	15oo	1oo

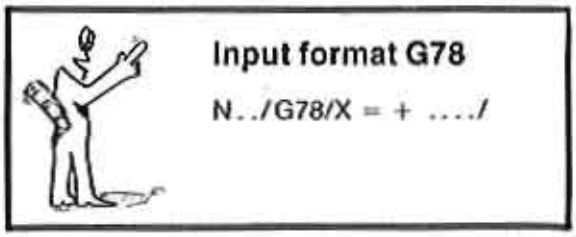

TECHNIQUE OF THREADING

Tool bit position at start of cycle G78

1. Choose zero-point of cycle such that you keep a little distance to the end of the workpiece.

2. The zero-point of cycle should neither be to close to the surface of the workpiece. It could scratch on the surface when moving back to the starting position (step 4).
   So choose the zero-point of cycle at o,1 mm distance to the surface.

Programming exercise 9 (G78)

Look in the charts for the details of the thread.

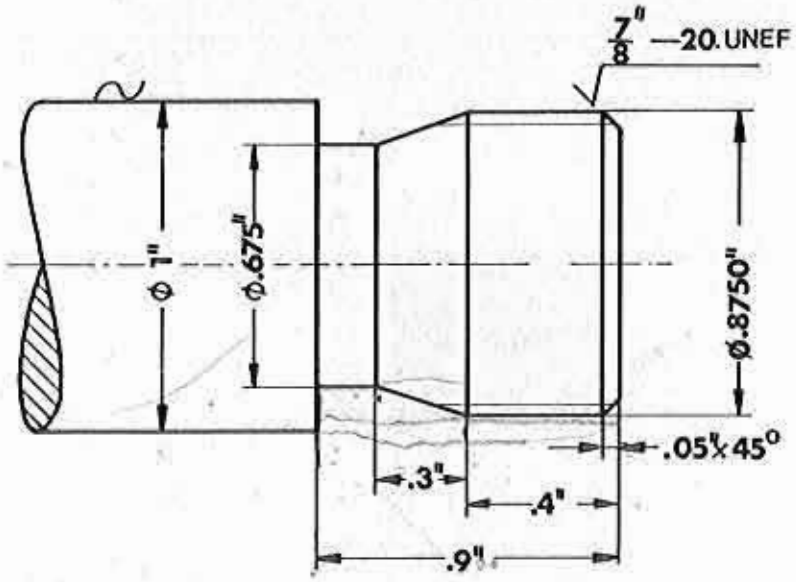

N	G	X	Z	F

Programming exercise 9 (G78)

Look in the charts for the details of the thread.

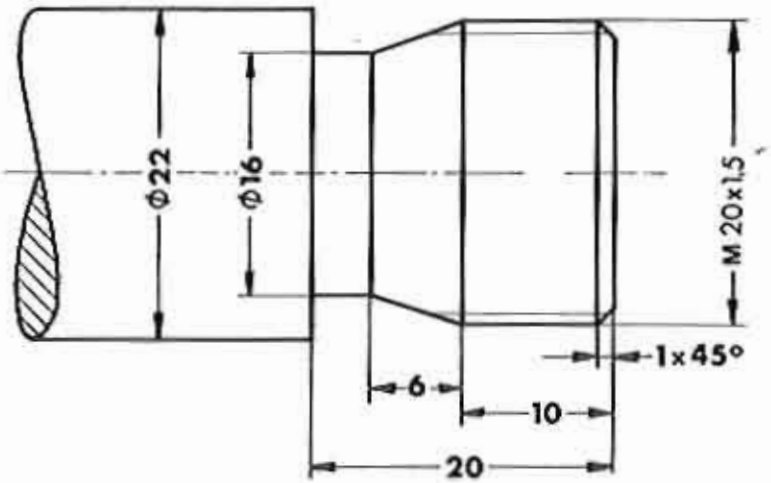

N	G	X	Z	F

Control of Dimensions – Corrections of Dimensions

Hand-operated machine

With hand-operated machines the turning operation often will be interrupted for measurements.
You position by means of the graduated scale on the handwheel, however you will have to check the intermediate and the final size of the workpiece.
The more experienced the lathe operator, the less intermediate measurements he will have to take.

NC-Machine

To measure is also necessary when using NC-machines; particularly when manufacturing the first workpiece it is of utmost importance.

Why are measurements necessary?

- Setting of tool bit not accurate
- Wear of bit edge
- Pressure of the chip can often not be calculated (deformation of machine and workpiece possible)

Corrections of dimensions

You have certainly realized how the corrections can be made.

1. Correction without a program change

How did we position the tool bit for the program start?

- Scratching the face side
- Scratching the outside
- Positioning of tool bit into start position

Which mistakes can be made?

- Diameter of unworked piece was not checked
- Scratching was not accurate

This means that the given position for the program start was not correct.

Correction after the first workpiece:

- Finish first workpiece
- Measure
- Correct start position of tool bit for following workpiece using hand-operation mode

Correction during manufacture:

- Press key [INP] + [FWD]
- Measure
- Switch to hand-operation and correct tool bit.

2. Correction by program change during or after the manufacture

Compare page 5.31

Attention:

What do you have to consider with a correction during manufacture?

Programming the outline of a workpiece

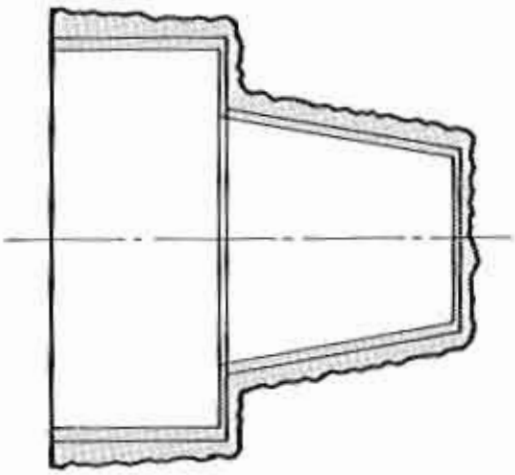

The workpiece can also be manufactured by outline/contour cuts to be executed step by step.

This method is used when preformed pieces (cast-iron part, forging, molded piece) are turned.

1. Roughing cut
2. Finishing cut

Method used on Compact 5 CNC:

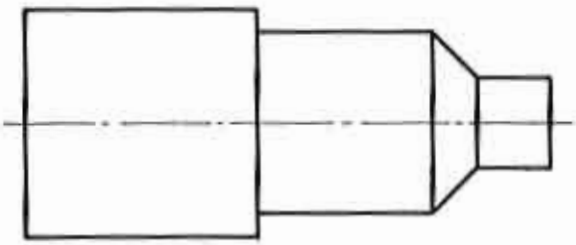

Example: Working out of the full

From the example you see that the tool bit executes with programmed feed many "cuts in the air". That means longer working time.

Break-down of cuts:
First cut

Second cut

Third cut

The number of blocks in the program is however less. And this means on the other hand less programming time and input time.

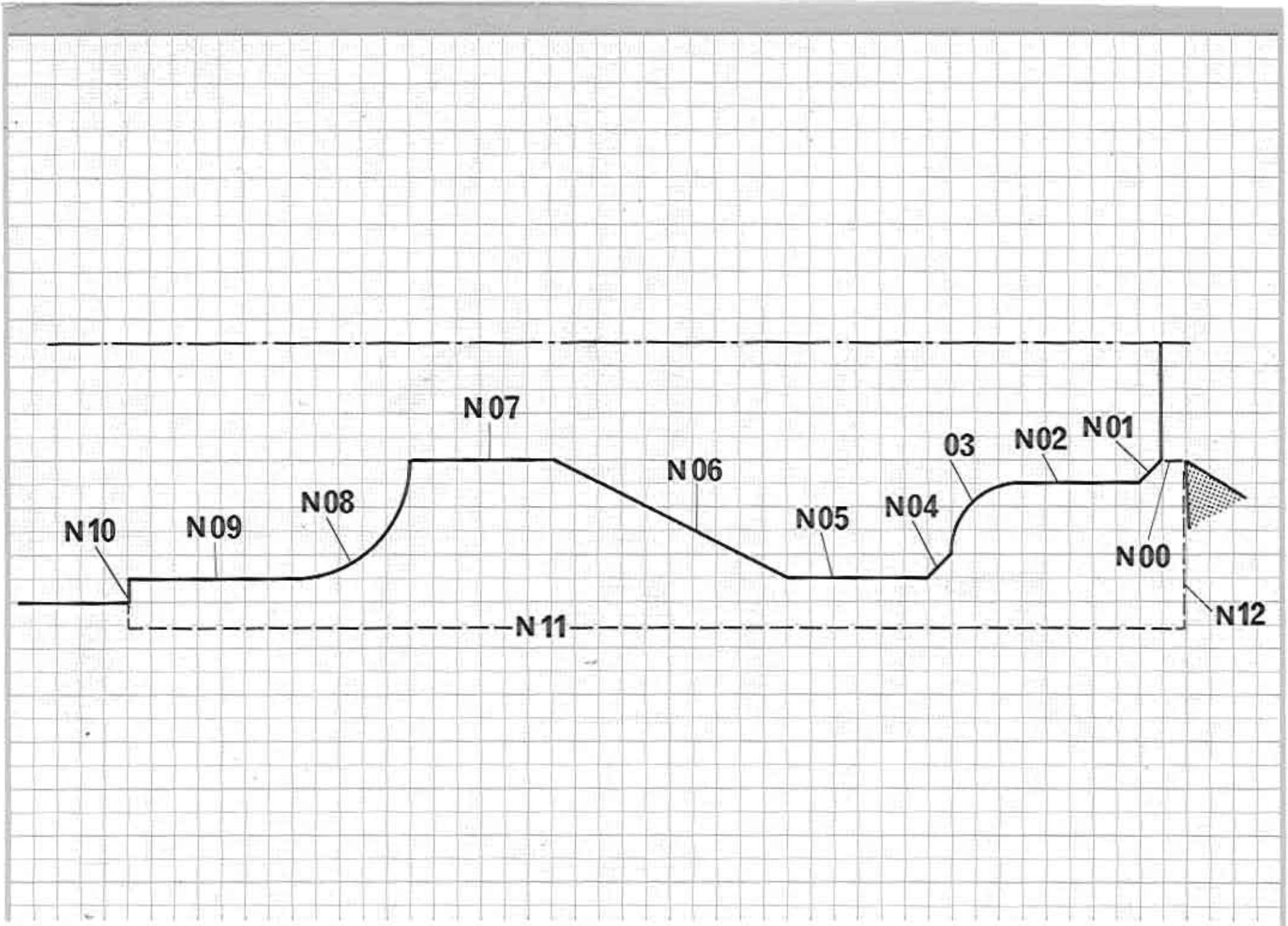
N07
N06
03
N02
N01
N08
N10
N09
N05
N04
N00
N12
N11

Programming example:

Depth of cut per run = .05"

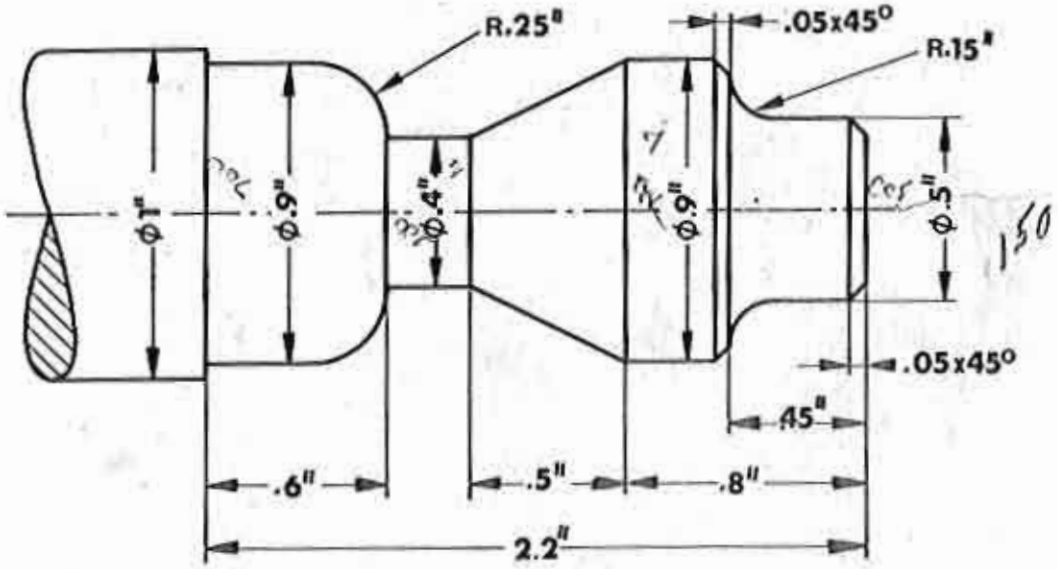

1 = Tool bit position - Program start (first run)

2= Tool bit position - Program end (after first run)

= Start position for second run

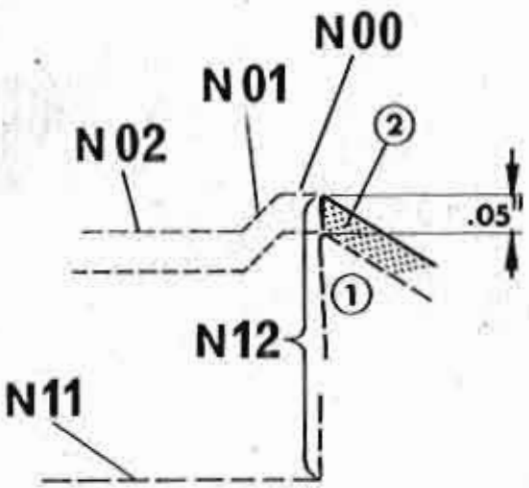

Programming the outline of the workpiece

Blocks N00 to N10

N	G	X	Z	F
00	00	0	-50	
01	01	50	-50	30
02	01	0	-250	30
03	02	150		30
04	01	50	-50	30
05	01	0	-300	30
06	01	-250	-500	30
07	01	0	-300	30
08	03	250		30
09	01	0	-350	30
10	01	100	0	30
11	00	0	2250	
12	00	-400		

Tool bit position at program end

N11 Move back in +Z-axis
N12 Move back in -X-axis
The tool bit is positioned .05" (when depth of cut is .05" over the program start point.

Programming example:

Depth of cut per run = 1 mm

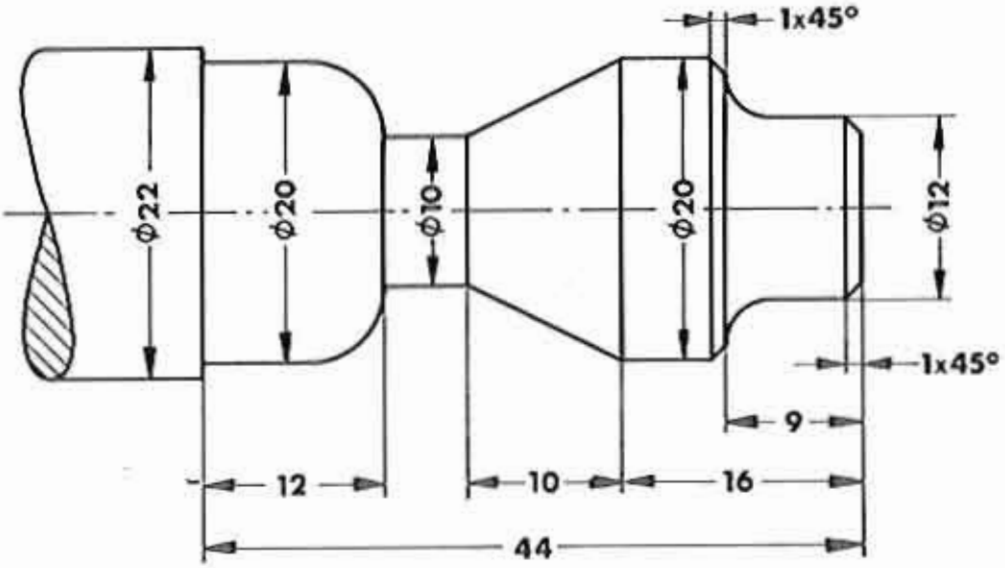

1 = Tool bit position - Program start (first run)

2 = Tool bit position - Program end (first run)

= Start position for second run

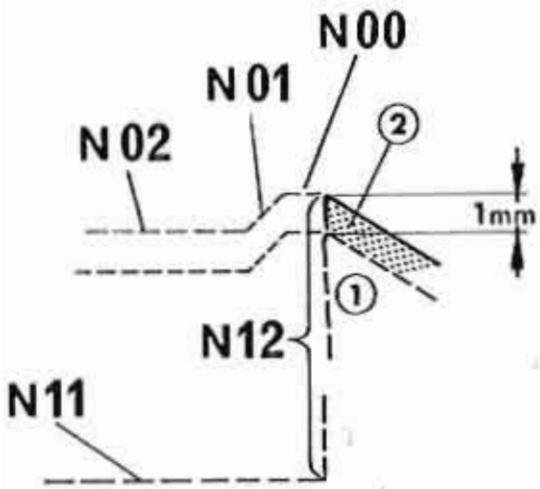

Programming the outline of the workpiece

Blocks N00 to N10

N	G	X	Z	F
00	00	0	-100	
01	01	100	-100	100
02	01	0	-500	100
03	02	300		100
04	01	100	-100	100
05	01	0	-600	100
06	01	-500	-1000	100
07	01	0	-600	100
08	03	500		100
09	01	0	-700	100
10	01	200	0	100
11	00	0	4500	
12	00	-800		

Tool bit position at program end

N11 Move back in +Z-axis
N12 Move back in -X-axis
The tool bit is positioned 1 mm (when depth of cut is 1 mm) over the program start point.

Manufacture:

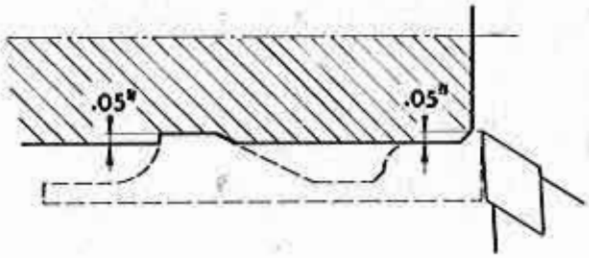

Tool bit position - first run

We have determined the maximum depth of cut with .05": thus the tool bit has to be positioned for the first run off the workpiece outside line. X=-.05"

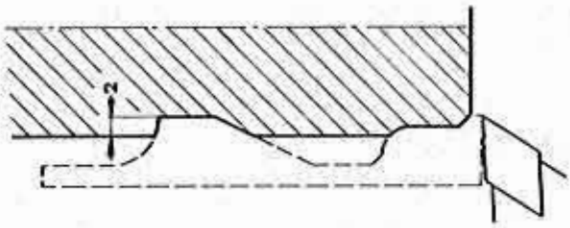

Execution of further outline/contour cuts

By pressing the key START, the following cuts will be executed.

Manufacture:

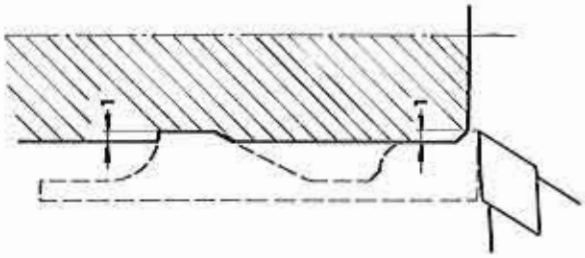

Tool bit position - first run

We have determined the maximum depth of cut with 1 mm: thus the tool bit has to be positioned for the first run X= -1 mm off the workpiece outside line.

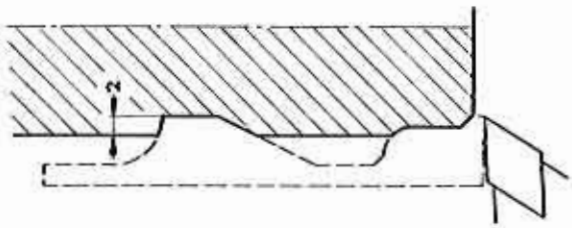

Execution of further outline/contour cuts

By pressing the key START, the following cuts will be executed.

Exercises

TECHNOLOGICAL DATA

Max. Cutting Speed:

Turning: Aluminium 25o m/min
Brass: 15o m/min

Parting off: Aluminium 15o m/min
Brass: 12o m/min

Max. Feed:

Turning: Aluminium o,o5 mm/rev.
Brass: o,o3 mm/rev.

Parting off: Aluminium o,o2 mm/rev.
Brass: o,o2 mm/rev.

Max. depth of cut: approx. 1 mm

Workpiece time and production time

1. Workpiece time = Portion of setting time
   + Mounting and dismounting time
   + Production time
   + Measurement time

2. Production period = Time passing from pressing key [START] to finish of manufacture (i.e. slides have moved back to starting position for next workpiece).

The production time (t_e) is divided into

Secondary Time (t_n)

= Time during operation, when there is no chip removal.
(= time for tool change or time in which slide moves without any chip removal)

Main time (chip removal time t_n)

= Total of time during which chip is removed.

The total of times (workpiece time) and the ratio of secondary and main time depends on the program which you are doing.

The ratio between input- and programming time (t_p) to production time (t_e)

Technological data such as
- max. cutting speed
- max. depth of cut
- max. feed rate

are mainly given. The chip removal expert will influence production time, surface quality and precision achieved by variations of the technological data.

The most important factor influencing the production time will however be the way how the programming is done.

Example

The workpiece has to be manufactured.

Programming 1: Contour programming (profile programming)

With contour programming the programming time and input time will be very short. The production time however quite long, since there are secondary times.

Programming and input time (t_p)

Workpiece time (t_e)

Secondary time (t_n)

Main time (t_h)

Programming 2:

Target is to achieve a very short workpiece time, that means very short secondary times too. So in most cases the programming and input time will be larger.

Programming and input time (t_p)

Workpiece time (t_e)

Secondary time (t_n)

Main time (t_h)

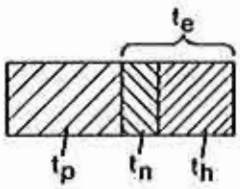

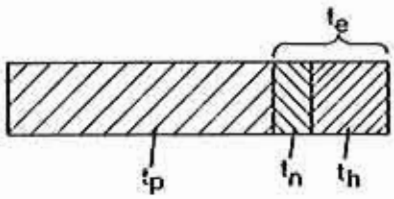

Conclusion:

The programmer will decide which way to go depending on the number of workpieces. He has to optimize between time necessary for programming and workpiece time.

Figure 1: Pawn

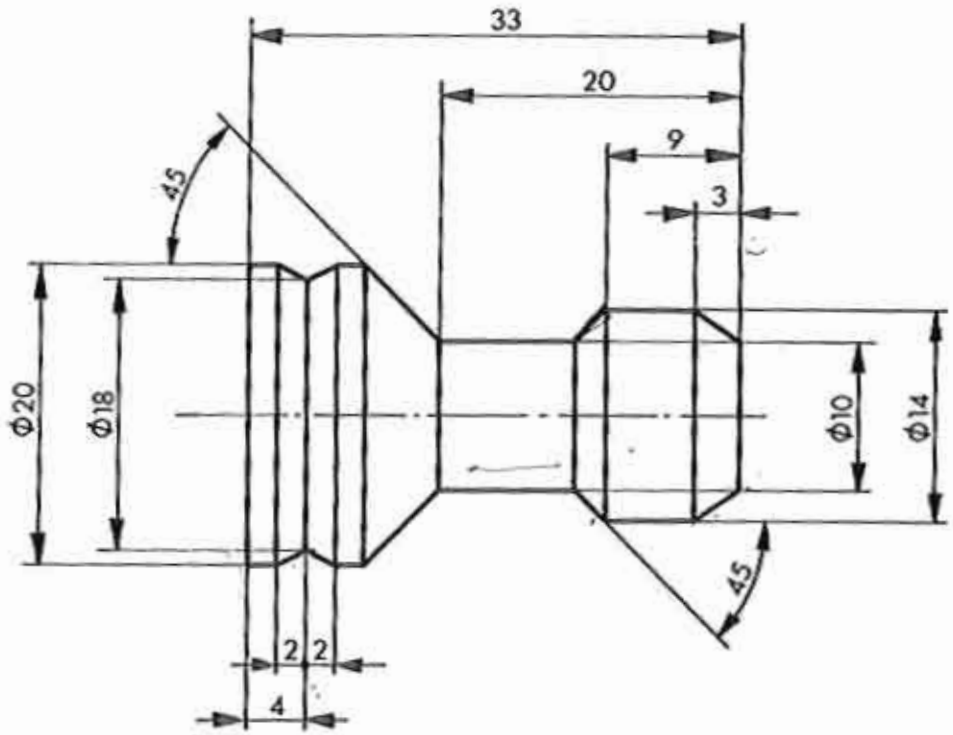

Figure 2: Bishop

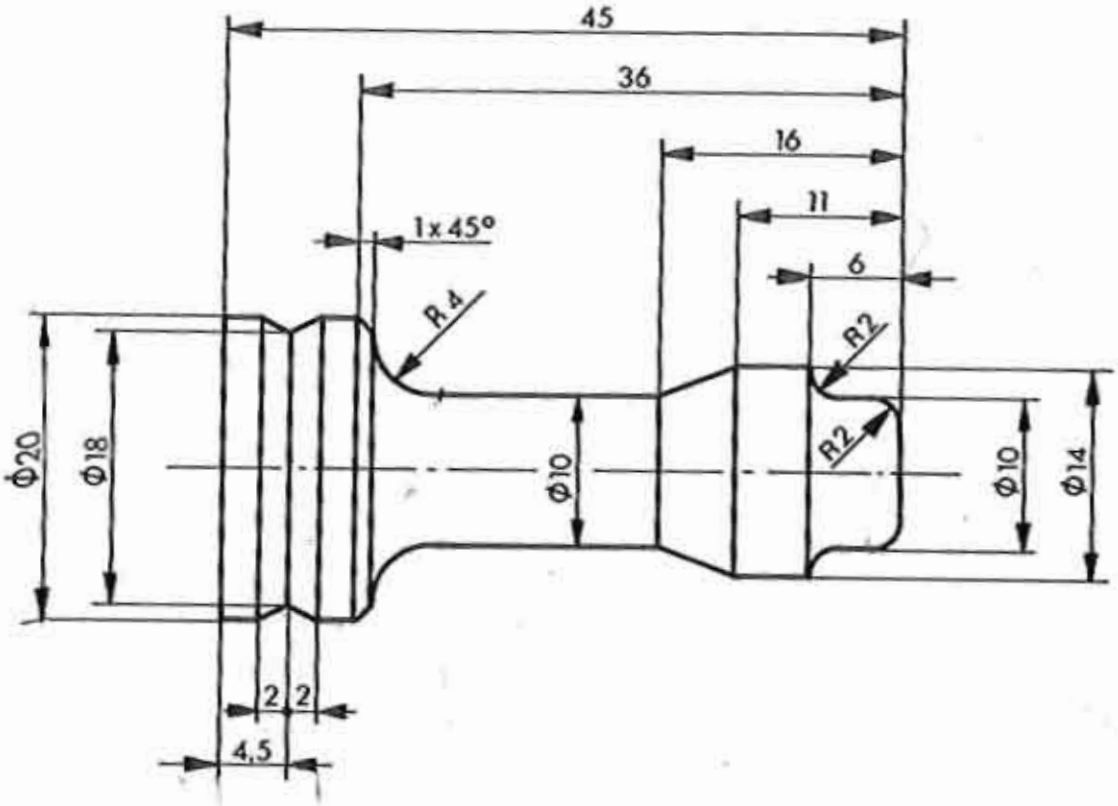

Figure 3: Castle

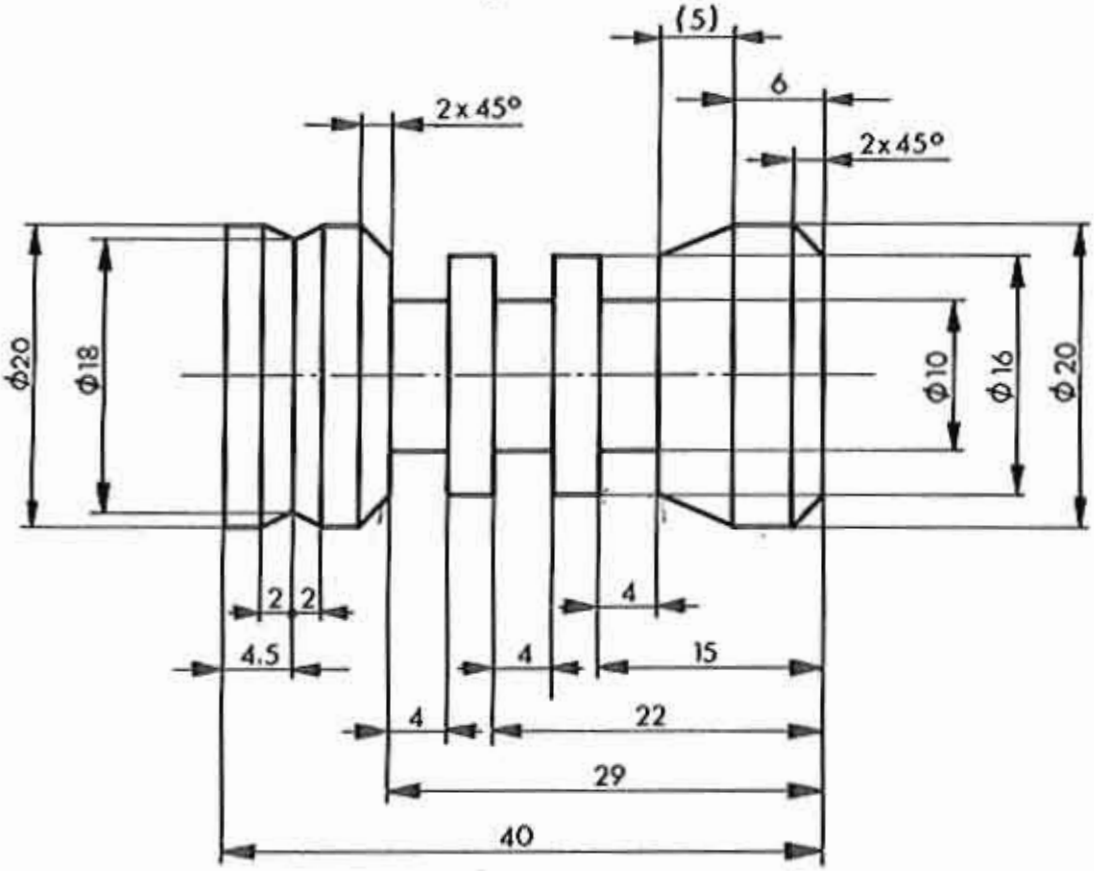

Figure 4: Knight

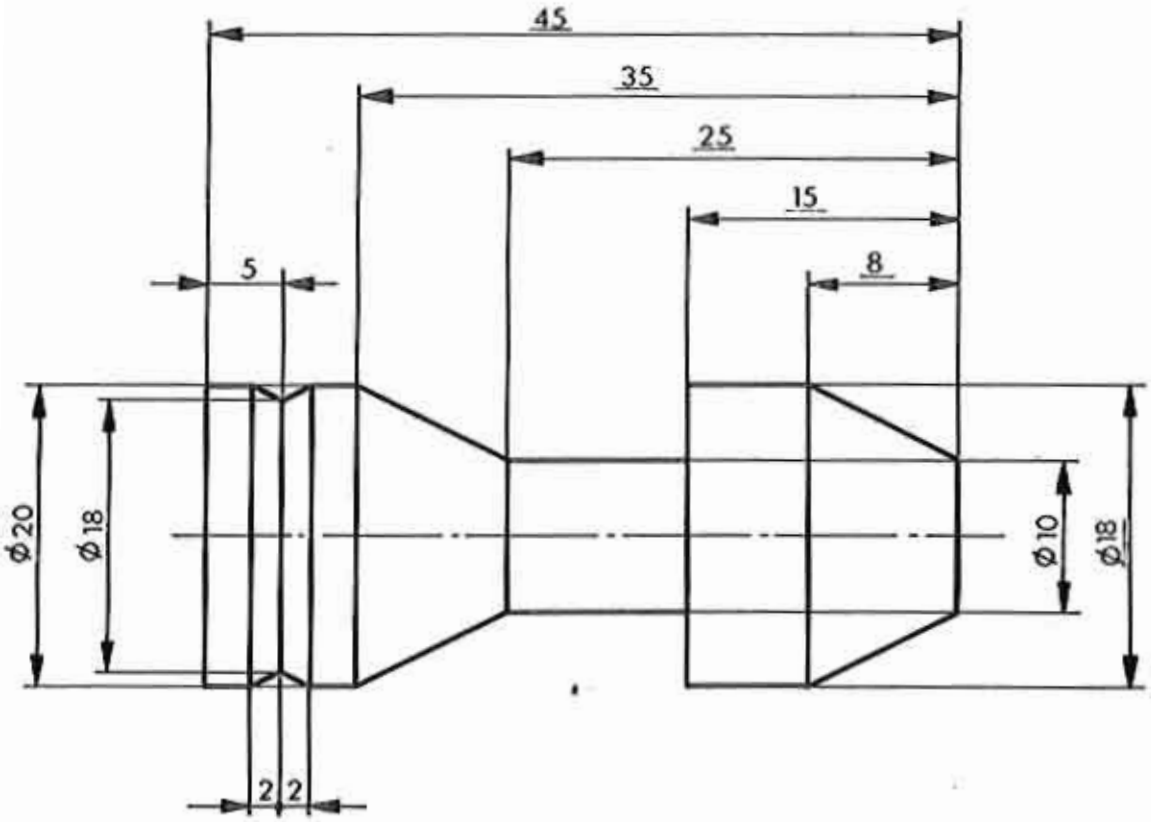

Figure 5: Queen

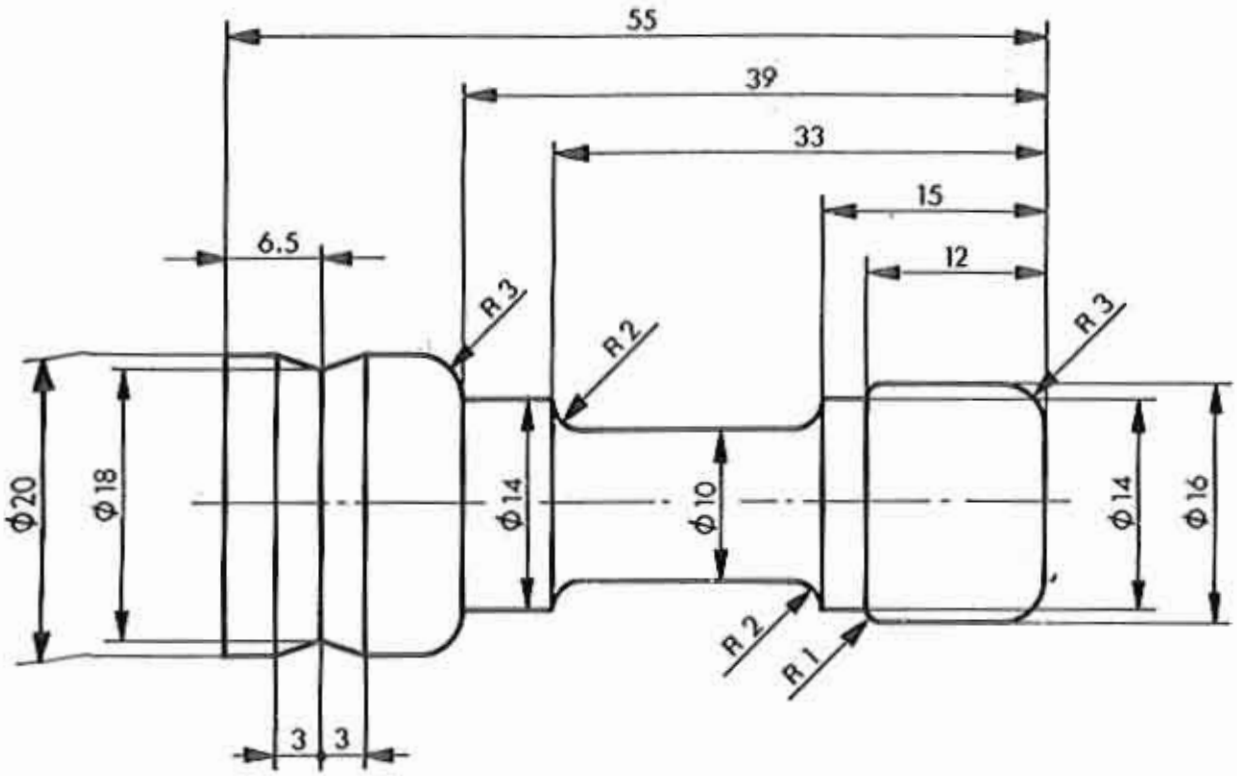

Figure 6: King

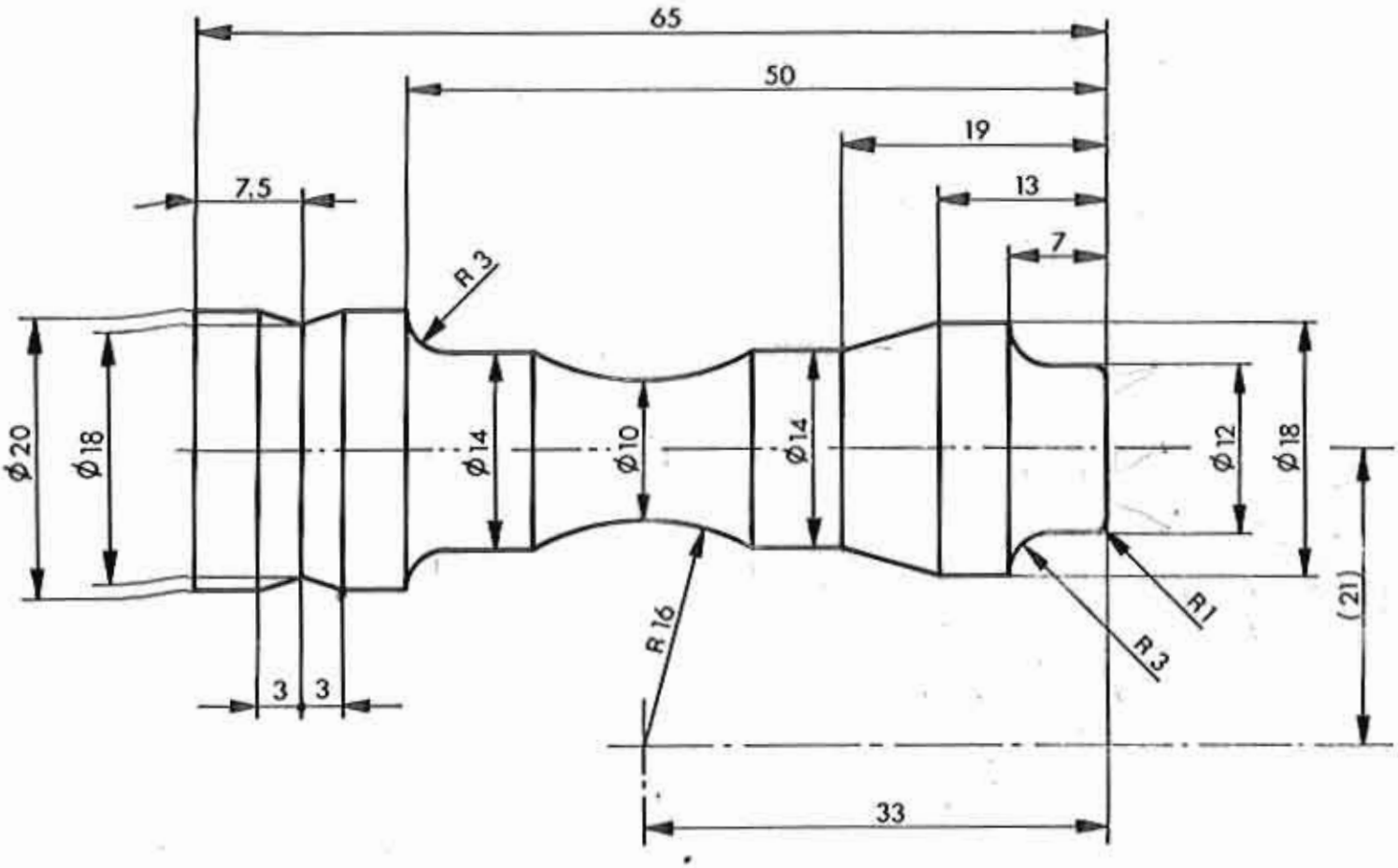

5. Program Input

Input format	5. 1 - 5. 3
Process of putting in data	5. 4 - 5. 5
Program input	5. 7 - 5. 9
Take over of registered values	5. 11
Operating elements	
Figure keys, word display, memory key, delete key	5. 13 - 5. 27
Double keys	
Program hold	
Program interruption	
Delete program	5. 29 - 5. 35

Program Input

The knobs, digital read-outs and symbols may confuse you at the beginning a little bit. It is better to start with putting in a simple program and go through the key-functions step by step. In half-an-hour you will certainly be familiar with it.

PROGRAM INPUT

Summary:

[INP] = input key

[DEL] = delete key

[FWD] = advance by block

[REV] = reverse by block

[→] = back by word

[FWD] + [INP] = hold in program

[INP] + [REV] = interruption of program

[INP] + [REV] = delete alarm

Press [DEL] then [INP] = delete program

Input format

The input format prescribes which information has to be put in and which not.
The input format depends on the G-function.
The computer asks certain inputs for the relative G-function.

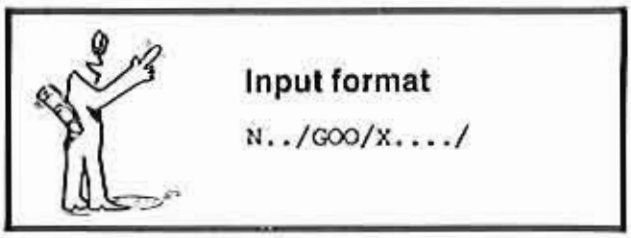

Let's take the first block again.

N	G	X	Z	F
00	00	-1000		

Mode of operation: CNC-operation

1

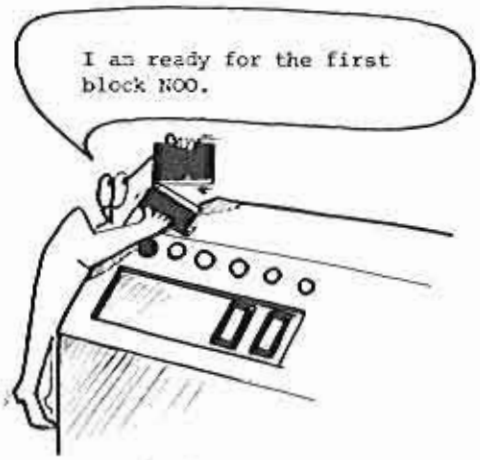

We press key INP.

2

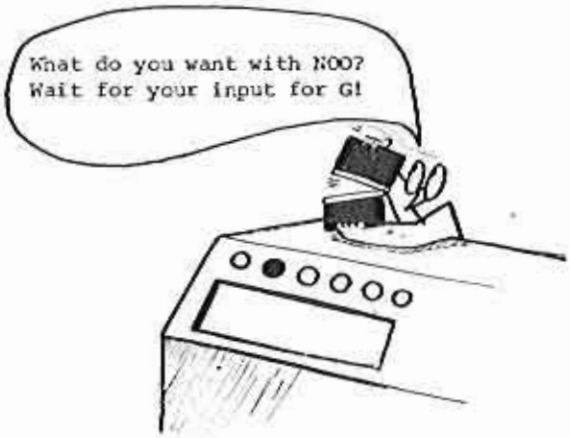

We put in 00 and press INP

3

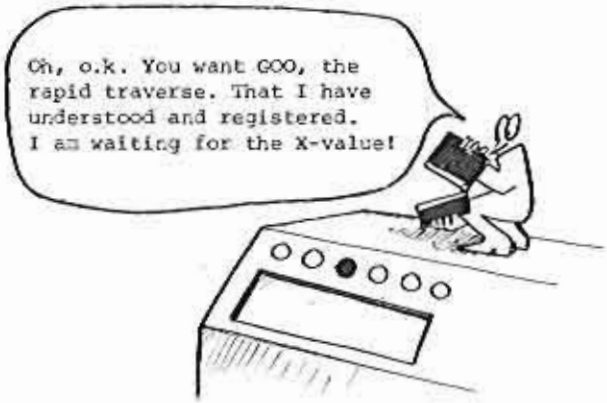

We put in 1000 - and press INP.

4

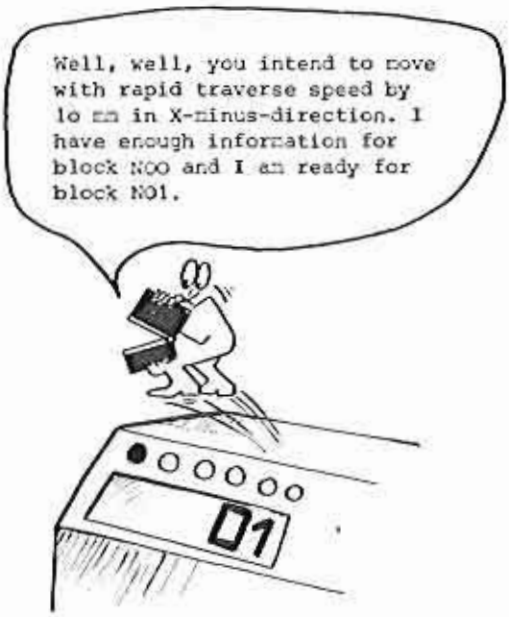

What happens when data is put in?

We put in G84.

1. Secretary (interface element) reports to director:

   "Somebody wants G84!"

2. Director (CPU=Central Processing Unit =Microprocessor) asks his specialists:

   "Can we execute G84?"

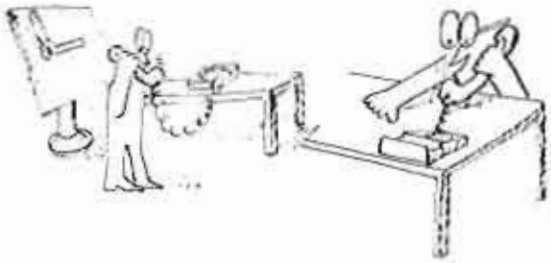

3. The specialists (EPROM=Programmable read-only memory) think and inform the director:

   "Yes we can!"

4. The director instructs the memory operating program (RAM=Random access memory):

   "Remember G84"

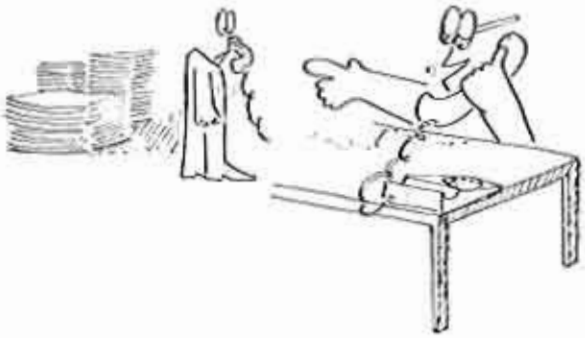

5. The memory reports to the director:

   "O.k., I have noted it down!"

6. Director instructs his press-speaker (output element):

   "Show them out there, that we are clear with G84. We have everything understood and ready for further inputs!"

What happens when Data is put in?

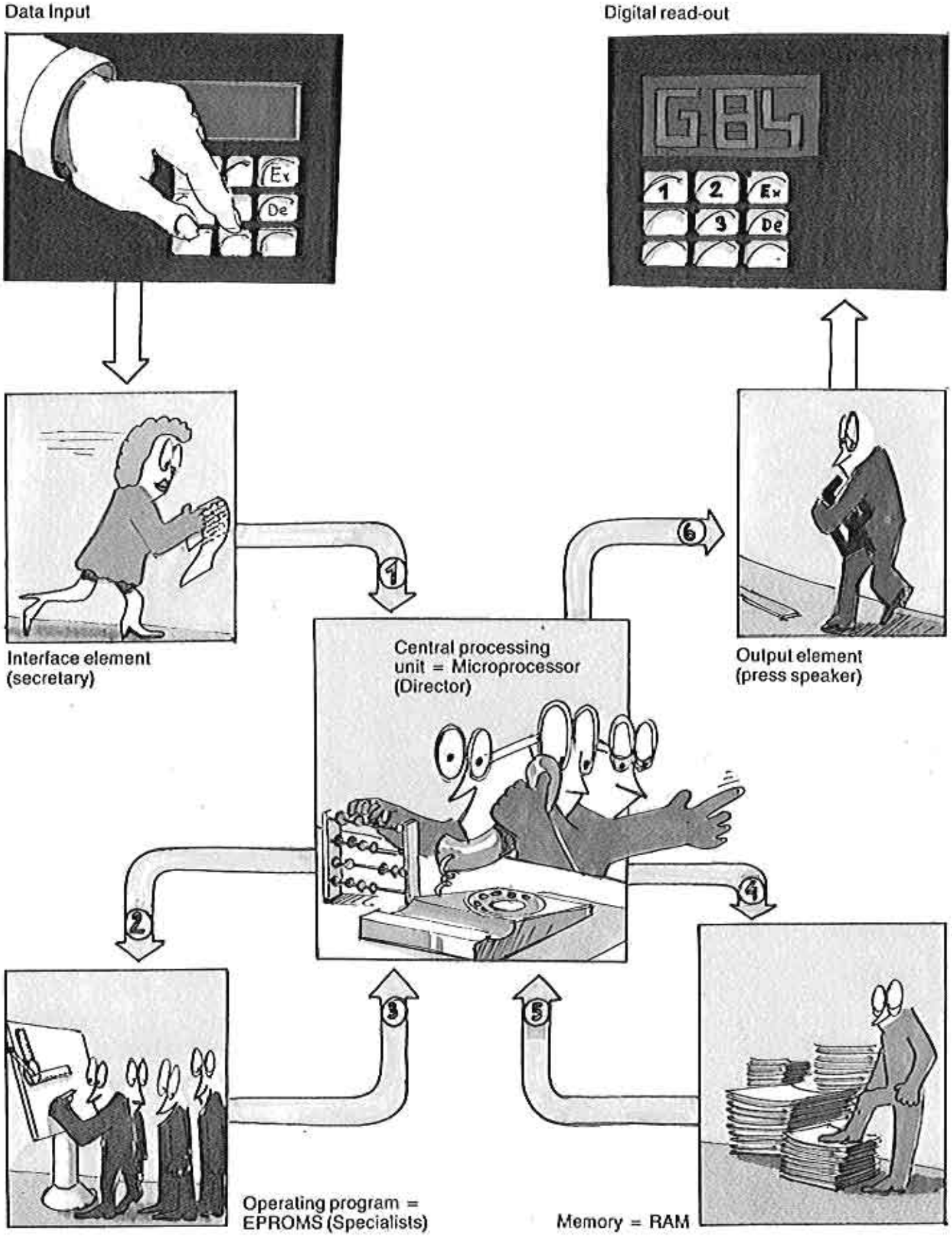

Program Input

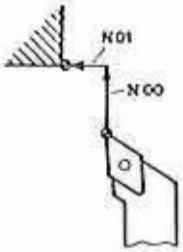

N	G	X	Z	F	Be
00	00	- 1000			
01	00	0	- 400		
02	22				

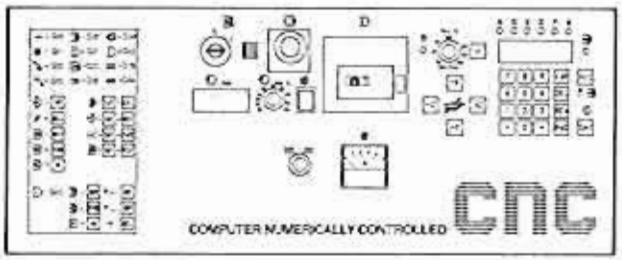

1. Switch on main switch:

The control lamp "current supply" and the lamp indicating the mode of operation "hand operation" light up.

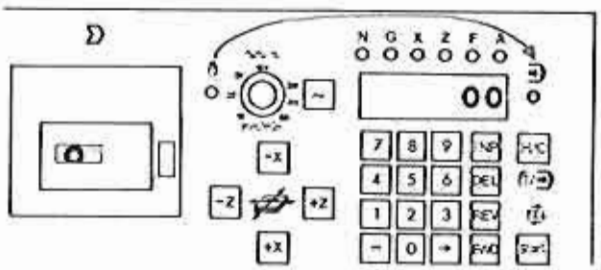

2. Press key H/C

- The light jumps from "hand-operation" to "CNC-operation".
- On digital read-out the light of address "N" lights up and you can read 00.

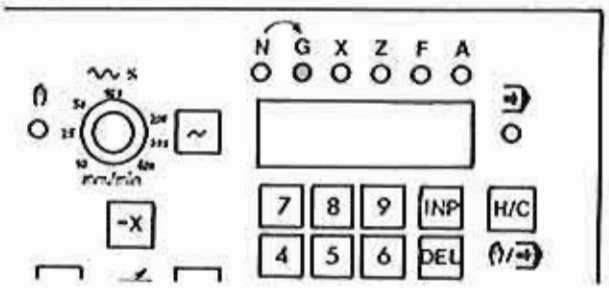

3. Press key INP

(= instruction to register N00)
The block number N00 is registered. At the same time the light jumps to the word indication G. The computer is waiting for the input of G.

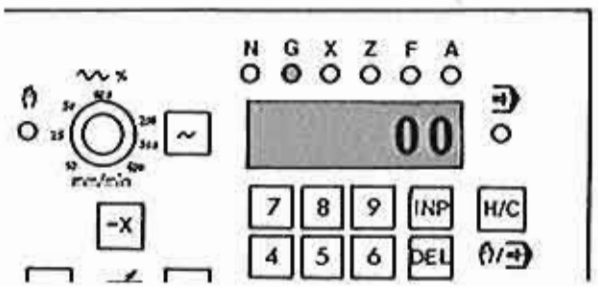

4. Put in 00:

00 appears on the digital read-out.

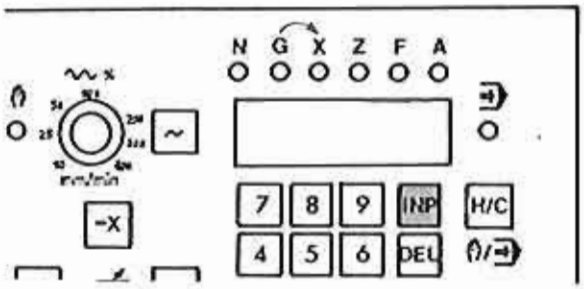

5. Press key INP

G00 is registered. The light of the word indication jumps to X.

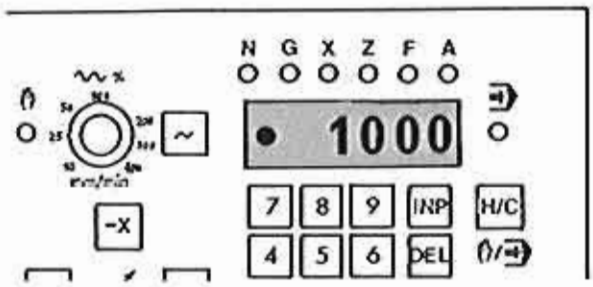

6. Put in 1000- :

The value put in appears on the digital read-out. The minus sign "-" is put in after the figures. It is shown on the digital read-out as point. If there is no minus-sign put in, then the value is automatically "+".

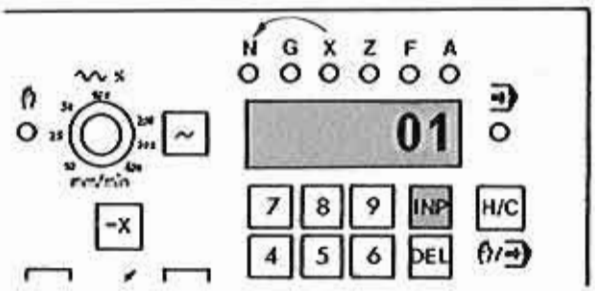

7. Press key INP

X-1000 is registered. The computer "knows" that the block N00 is finished. The light jumps to N. On the digital read-out the value 01 = N01 appears.

8. Put in second block in the same way.

9. G22 = Program end has to be put in.

10. Press key START. The program runs.

Now you have written your first program, you have put it in and the machine executes it.

Take over of registered values from previous blocks

By pressing the key [INP] the memory takes over the value of the relative word column G,X,Z,F which has been registered last.

Example 1and2

N	G	X	Z	F
00	00	1000		
01	00	0	500	
02	01	0	100	100
03	00	500		
04	01	200	200	100

Example 1

- Block N00 is programmed.
- In block N01 the address letter G lights up.
- Press key [INP]. The value 00 lights up shortly and is registered in block N01.

Example 2

In block N02 we programmed F100. This is the value for F which was put in last. If you press [INP], now F100 will be taken over into block N04.

Example 3

N	G	X	Z	F
00	00	-500		
01	00	0	~~-400~~ -500	
02	84	-100	-1000	100
03	84	-200	-1000	
04	84	-300	-1000	

Example 3

You have registered block N03. You see by chance that the Z-value of block N01 is wrong. You correct it immediately, e.g. to Z = -5oo and continue with putting in block N04.
If you press [INP] with the Z-value input also will register the value which was put in last, e.g. Z = -5oo.

Operating Elements CNC-Operation

1. Option key: Hand operation – CNC-operation (H/C – pos. 1.)

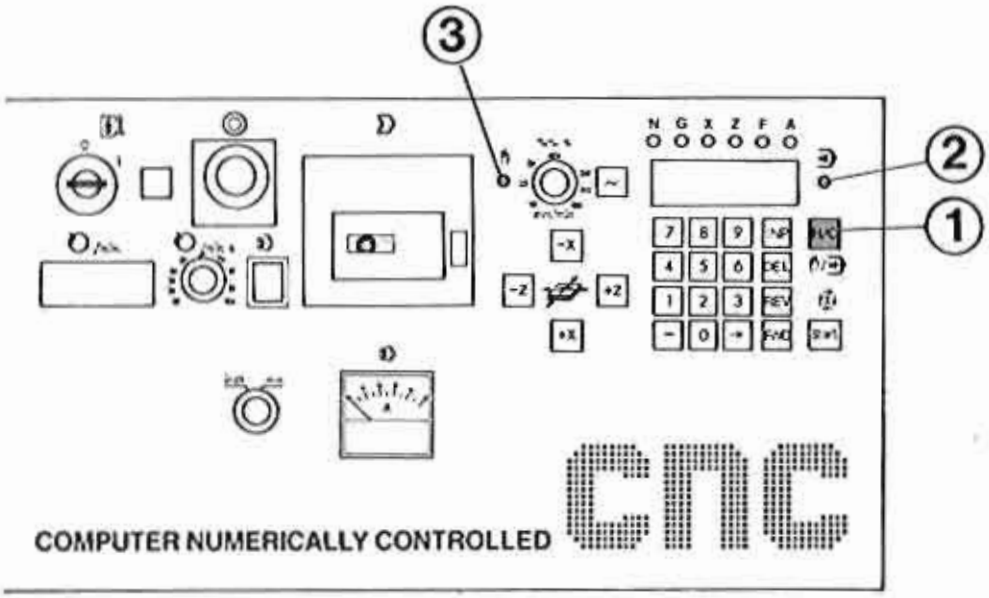

By pressing the key [H/C] you change from hand operation to CNC-operation.

The mode in operation is indicated by lamp (∋ o) (position 2) or (⌂ o) (position 3).

To put in a program you have to change over to CNC-operation. After that you cannot move the slides by hand-operation anymore.

The Figure Keys

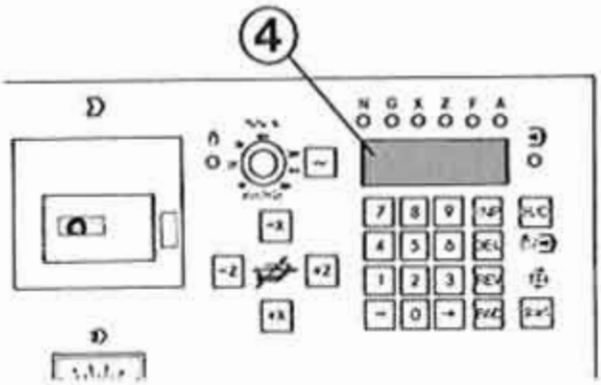

With the figure keys you enter

- G-functions (G00, G01, G21 etc.)
- X- and Y-values
- Feed sizes
- Thread pitches

The values which are entered appear on the digital read-out (4).

The Minus-Sign Key [−] (5)

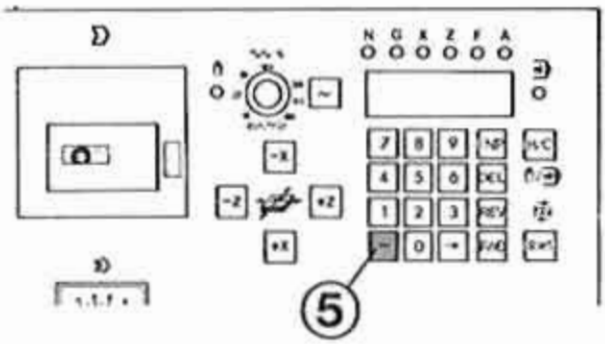

X- or Z-values can have a minus or a plus sign.

Plus sign input for X,Z:

Put in figures only.

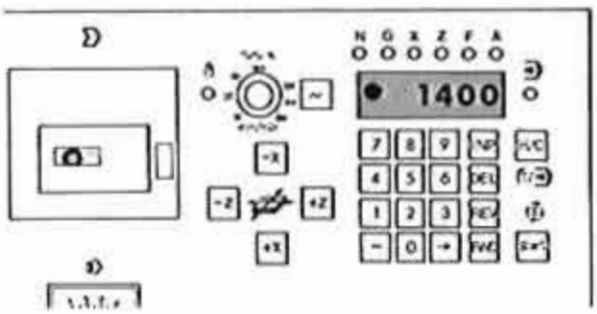

Minus sign input for X,Z:

After input of figures press [−] key. The minus sign will appear as a point on the digital read-out.

Example:

X = -1400
Input: [1][4][0][0][−]

The Word Display (6)

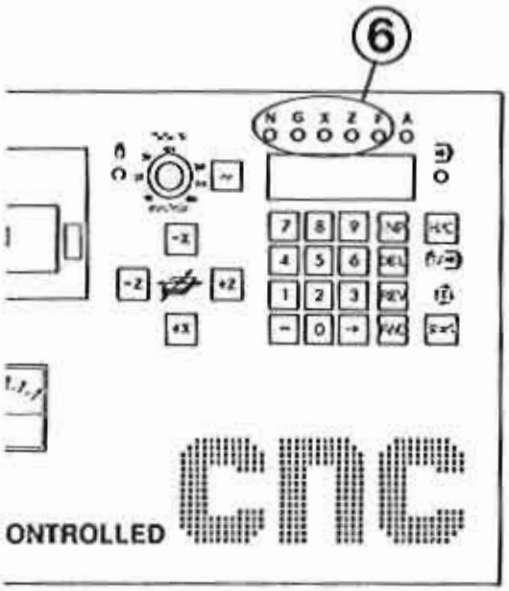

The lamps for the word display light up and inform you which instruction to enter.

N = block number
G = path function
X,Z = values
F = feed / thread pitch

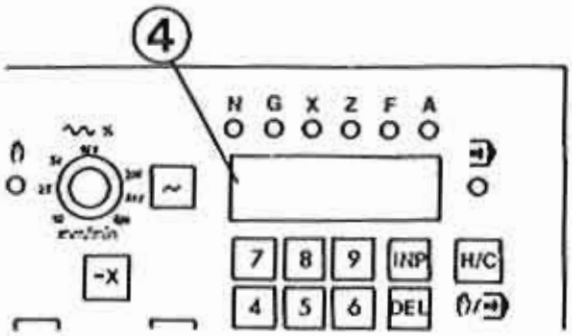

Example:

Lamp X lights. The digital read-out (4) is dark. Value X can be put in and appears on the digital read-out.

The INP key (7) = Memory Key

INP = Instruction to the computer, to register the entered value.

INP = Abbreviation for Input

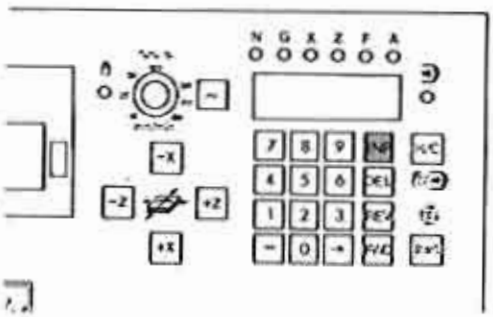

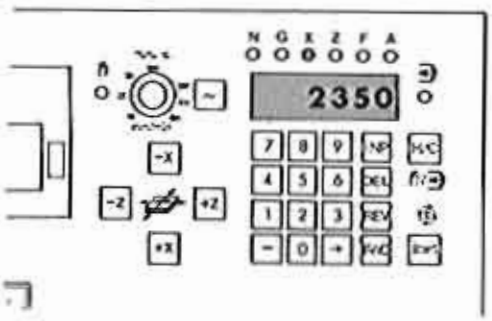

Example:

- Lamp X lights up.
- Value 235o is entered. Digital read-out indicated value, but is only information and not in the computer.

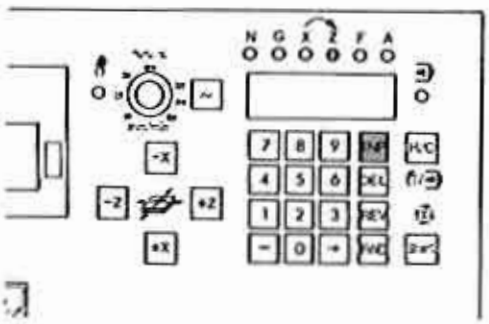

- You press INP.
  By pressing this key, figures are registered and darken on the digital read-out. At the same time the light jumps to the next letter. The next figures can be put in.

G00 – Positioning with Rapid Traverse

The positioning of the turning tools, i.e. movement of same without chip removal, must be done with highest possible speeds (rapid traverse) for economic reasons. The slides move in Z- or X-direction.

Necessary inputs

1. Slide moves in X-direction: N00, X-value in thousandth of inch (.001).

2. Slide moves in Z-direction: N01, X=0, Z-value in thousandth of inch (.001).

The speed of the traverse is 27,5 inch per minute in both cases.

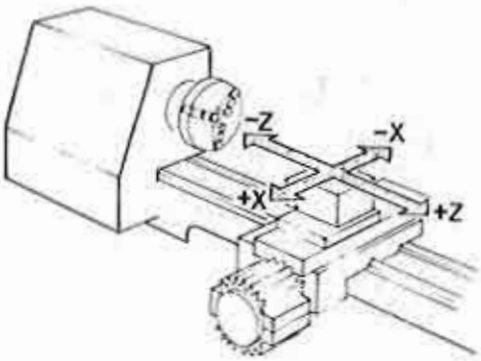

Input formats G00

1. N../G00/X±..../
2. N../G00/X=0/Z=...../

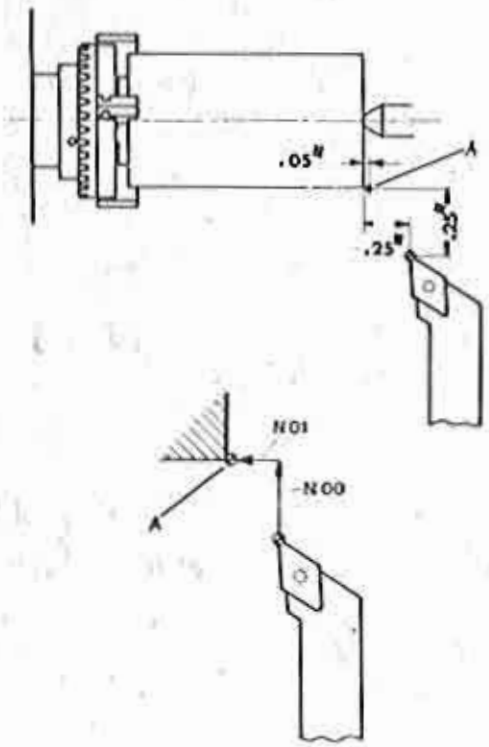

Example:

To facilitate the mounting and dismounting of the turning tool it keeps the indicated distance to the workpiece edge. The tool is moved with rapid traverse to point A.

Block N00 - Turning tool moves .25" in X-axis, sign "-". Z-value and F-value need not to be entered.

Block N01 - Turning tool moves .20" in Z-axis, sign "-". F-value need not to be entered.

N	G	X	Z	F	Ben
00	00	-250			
01	00	0	-200		
02	22				

The FWD key (Forward Key)
Instruction: to jump forward block-by-block

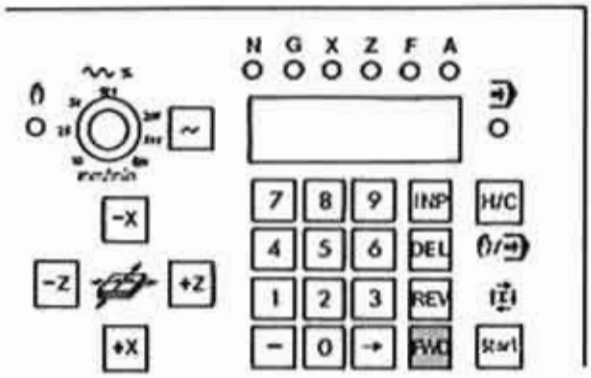

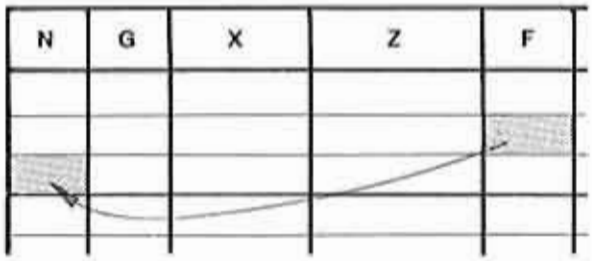

1. If G,X,Z or F are on display, then program will jump to next block number, when you touch key FWD once.

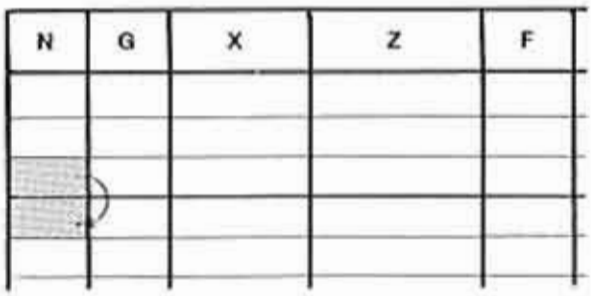

2. If block number N is indicated: you press key FWD once and program will jump to next block number.

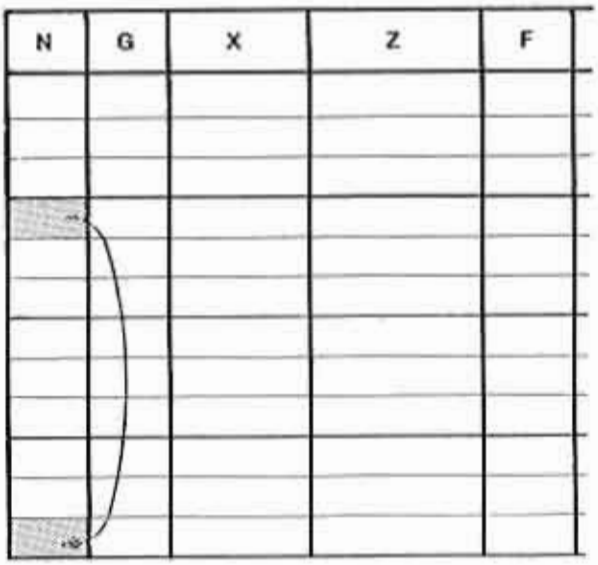

3. If you keep key FWD pressed down, program will jump block-by-block to program end.

The REV key (Reverse Key)

Instruction: to jump back in program block-by-block

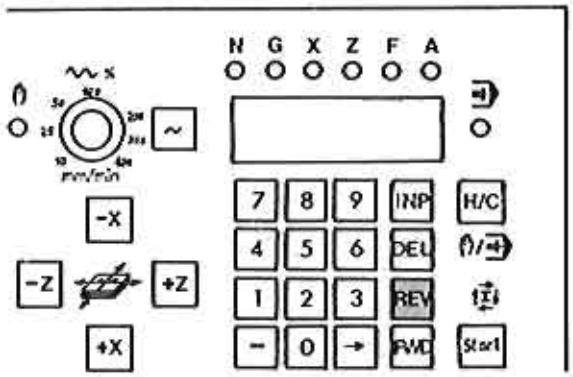

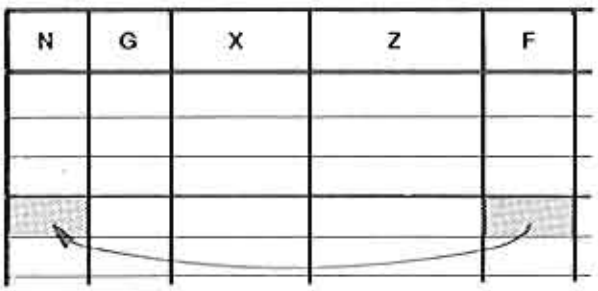

1. G,X,Z or F-value are indicated on the digital read-out. If you press key REV , then it will jump back to the block number.

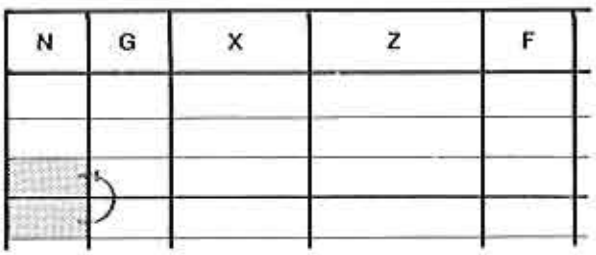

2. If block number is indicated on digital read-out, you press key REV , then the program will jump to the previous block.

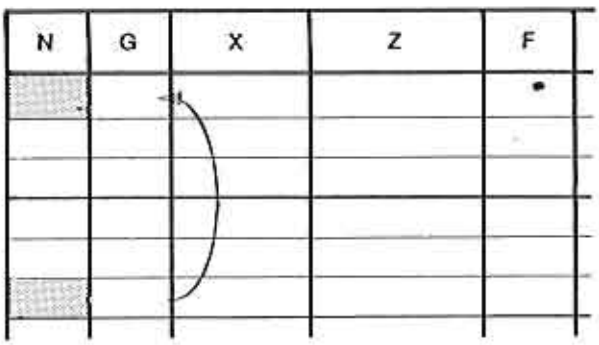

3. If block number is indicated on display read-out and you carry on to press key REV (or keep it pressed down), then it will jump back block-by-block to number 00.

The [→] Key

Instruction: to jump forward within one block

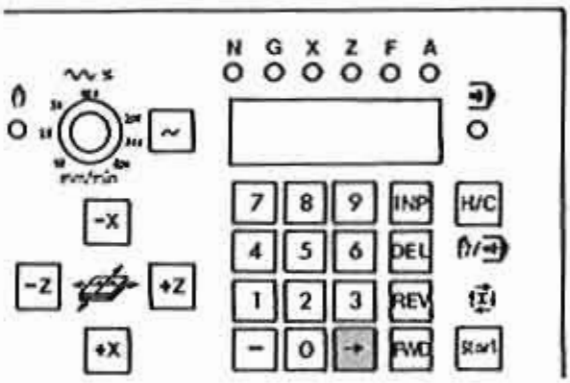

By pressing the key [→] the program will jump to the next word. The entered value of the next word will appear on the digital read-out.

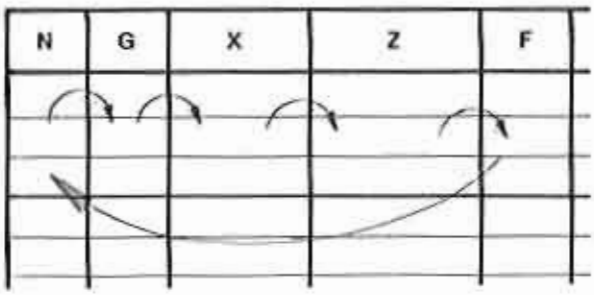

Hold with every Word during Program Operation: INP + FWD

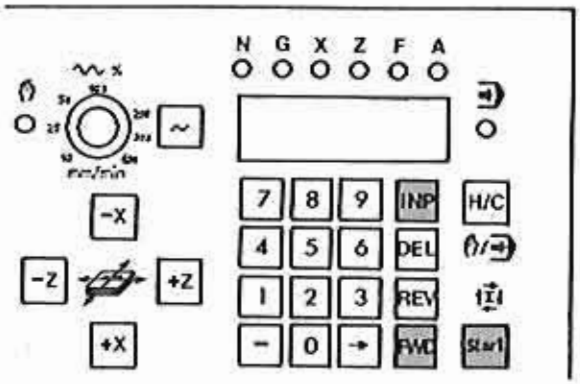

Program hold = INP + FWD

The slides stop. The computer knows the actual position of the slides.

To continue program operation = press key START

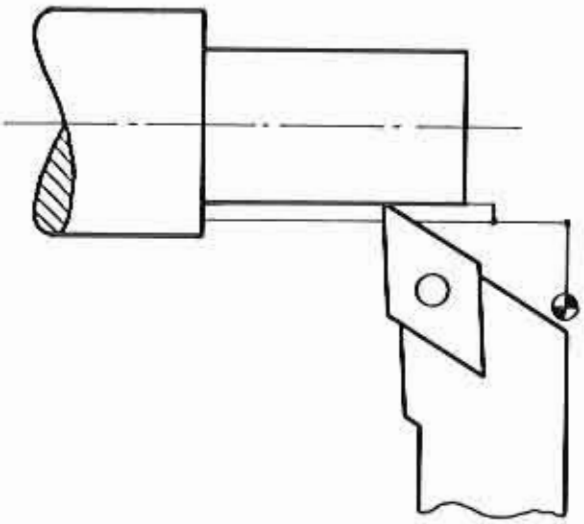

Why program hold?

You can

- take measurements,
- change position of tool bit,
- correct program.

1. Taking measures, changing position of tool bit without changing the program

Example:

You want to check, whether diameter in block NO2 is correct (possible reasons for mistake: tool bit position was incorrectly set at program start).

N	G	X	Z	F
00	00	-500		
01	00	0	-400	
02	84	-100	-1100	80
03	84	-200	-1100	80
04	84	-300	-1100	80
05				

Measuring

1. Press INP + FWD
2. Switch off main spindle
3. Take measurements

correction

Your measurement tells you that the dia. is by o,1o mm too large.

1. Switch on main spindle
2. Press H/C
   Feed in tool bit by o,o5 mm.

Program continuation

1. Change over to CNC-operation
2. Press START key.

2. Correction of program with INP + FWD

Press INP and FWD.

Correction of program within interrupted block:

G,X,Z,F values can be changed.

- The corrections on G,X,Z are only effective in the next run of the program.
- The F-correction is already effective in the actual run of the block.

N	G	X	Z	F
00				
01				
02				
03	84	-200	~~-1100~~ 1200	~~80~~ 100
04				

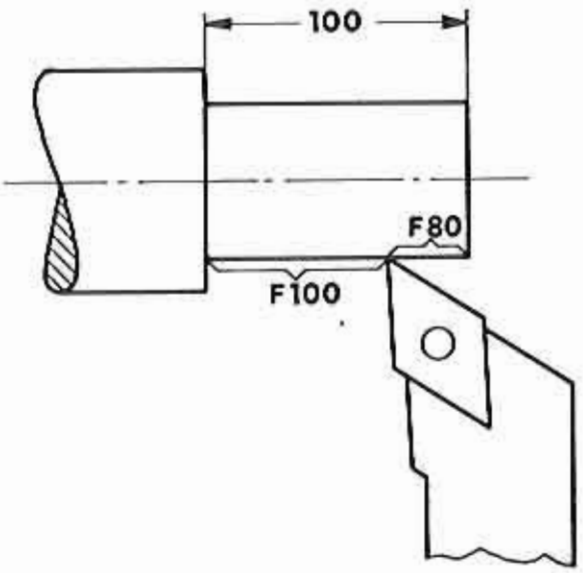

Example:

You hold in block NO3 with INP + FWD. Tool bit position as indicated.

- You change the Z-value from 1000 to 1100. This correction will not be effective in the actual run of the block, but with the next run of the program.
- You change the F-value from F80 to F100. This correction is effective still in the actual run of the block.

Corrections of program for next blocks

Corrections of program for the following block will become effective still within the actual program run.

Program Hold INP + REV

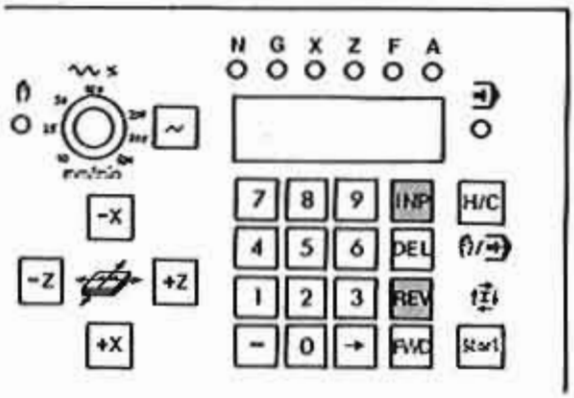

Press keys INP + REV. The block number jumps back to N00. The computer "forgets" the position of the tool bit.

Attention:

If you press START after INP + REV, the program starts with block N00. The tool bit is still in the position as it was, when INP + REV was pressed.
N00'/N01'/N02' would be the traverse of the tool bit if you pressed START.

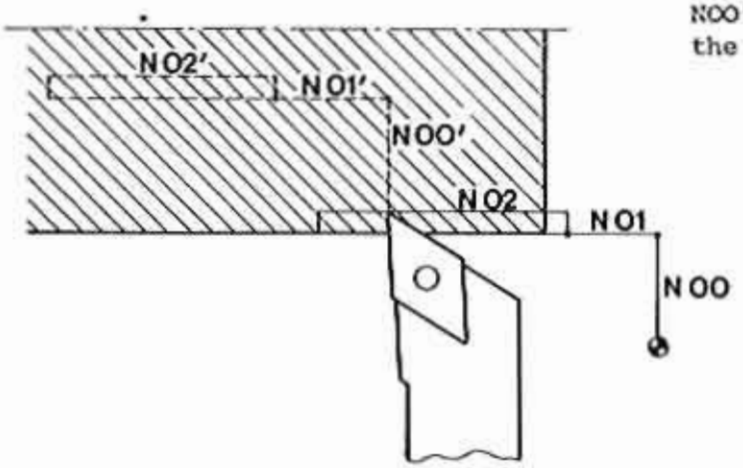

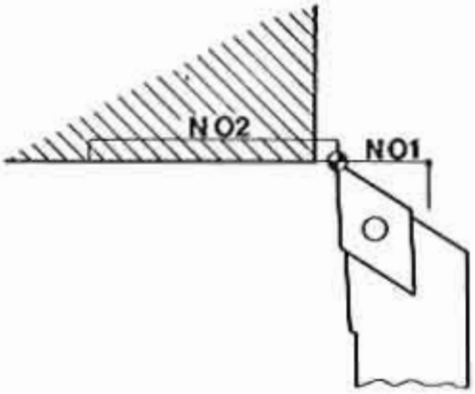

Measurements:

You have to bring the tool bit before START in a position of a block start.

Example:

- Position the tool bit in position of cycle start G84. G84 is block number N02 (the positioning is done in "hand-operation").

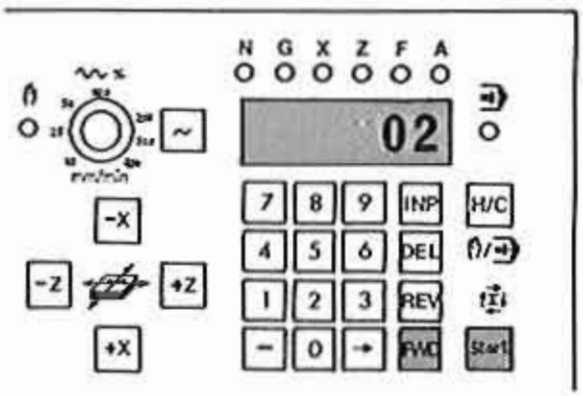

- Touch key FWD until block number N02 appears.
- Press key START. The program starts with N02.

Delete a registered Program

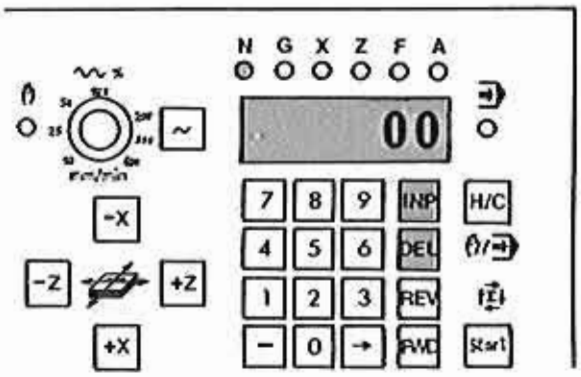

Possibility 1

Switch off main switch.

Possibility 2

Press emergency stop.

Possibility 3

If you see a block number indicated on digital read-out (NOO, NO1, NO2 ...) you have to:

Delete:

First press key [DEL] then [INP] (DEL remains pressed down).

The registered program is deleted.
The digital read-out shows NOO.

6. Alarm Signs

Causes – Measures

Alarm Signs

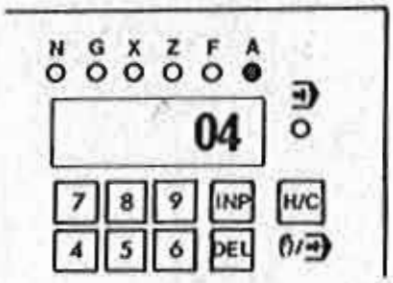

When you put in data to be processed which the computer does not know, it will indicate alarm.

Lamp A will light up and a number will appear on the digital read-out. This number encodes the type of alarm.

Put in alarm signs (summary)

A00 - Undefined dimensions programmed

Example for wrong input: If you put in G25, lamp A will light up and digital read-out will indicate 00.

A01 - Undefined radius programmed

The following radii can be programmed: 5o, 1oo, 15o, 2oo, 25o ... 195o. Example for wrong input: X 121o: Lamp A will light up, digital read-out will indicate 01.

A02 - X-value too big

Max. value for X: ± 1999 (1.999")

A03 - False F-value programmed

Possible input: 1-199 (.1-19,9" per minute,

A04 - Z-value too big

Max. value for Z: ± 19999 (19.999")

A05 - No program end programmed

If you forget to put in G22 at the program end and you press the START key, the alarm lamp will light.

A06 - Revolution of main spindle too fast when threading

This alarm will not be during the input of the program but only during the operation G33 or G78 itself.

A07 - Undefined angle programmed

The following ratios for angles ca be put in: ratio X:Z (1-39):(1-39). For further explanations please see "Taper turning"!

ALARM SIGNS - TAPE OPERATION

A08 - End of tape when tape operation SAVE

A09 - Program not found

A1o - Writing protection active

A11 - Loading mistake (LOAD)

A12 - Checking mistake (CHECK)

ALARM SIGNS - FOR METRIC/INCH VERSION MACHINE ONLY

A13 - Changeover inch/metric with full program register

A14 - Wrong dimensions for program loade.

Alarm Signs

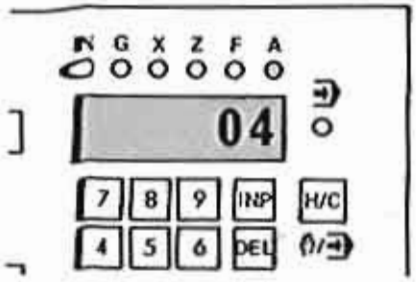

When you put in data to be processed which the computer does not know, it will indicate alarm.

Lamp A will light up and a number will appear on the digital read-out. This number encodes the type of alarm.

Put in alarm signs (summary)

A00 – Undefined dimensions programmed

Example for wrong input: If you put in G25, lamp A will light up and digital read-out will indicate 00.

A01 – Undefined radius programmed

The following radii can be programmed: 50,100,150,200 ... 5900. Example for wrong input: X 1210: Lamp A will light up, digital read-out will indicate 01.

A02 – X-value too big

Maximum value for X: ±5999 (59,99 mm)

A03 – False F-value programmed

Possible input: 1-499 mm/min.

A04 – Z-value too big

Maximum value for Z: ±39999 (399,99 mm)

A05 – No program end programmed

If you forget to put in G22 at the program end and you press the START key, the alarm lamp will light.

A06 – Revolution of main spindle too fast when threading

This alarm will not be during the input of the program but only during the operation G33 or G78 itself.

A07 – Undefined angle programmed

The following ratios for angles can be put in: ratio X:Z (1-39):(1-39). For further explanations please see "Taper turning"!

ALARM SIGNS – TAPE OPERATION

A08 – End of tape when tape operation SAVE

A09 – Program not found

A10 – Writing protection active

A11 – Loading mistake (LOAD)

A12 – Checking mistake (CHECK)

ALARM SIGNS – FOR METRIC/INCH VERSION MACHINE ONLY

A13 – Changeover inch/metric with full program register

A14 – Wrong dimensions for program loaded

What happens when wrong data is put in – Alarm sign

We put in a X-value 8o2,4o; i.e. for the cross slide a traverse path of 8o2,4o mm.

1. The secretary (interface element) reports:

   "They want X = 8o2,4o!"

2. The director (central processing unit, microprocessor) asks his specialists:

   "Can we execute X = 8o2,4o?"

3. The specialists (operating program) answer:

   "No, Mister Director!"

4. The director instructs his speaker (output element):

   "Tell them out there, we cannot do that!"

What happens when wrong Data is put in?

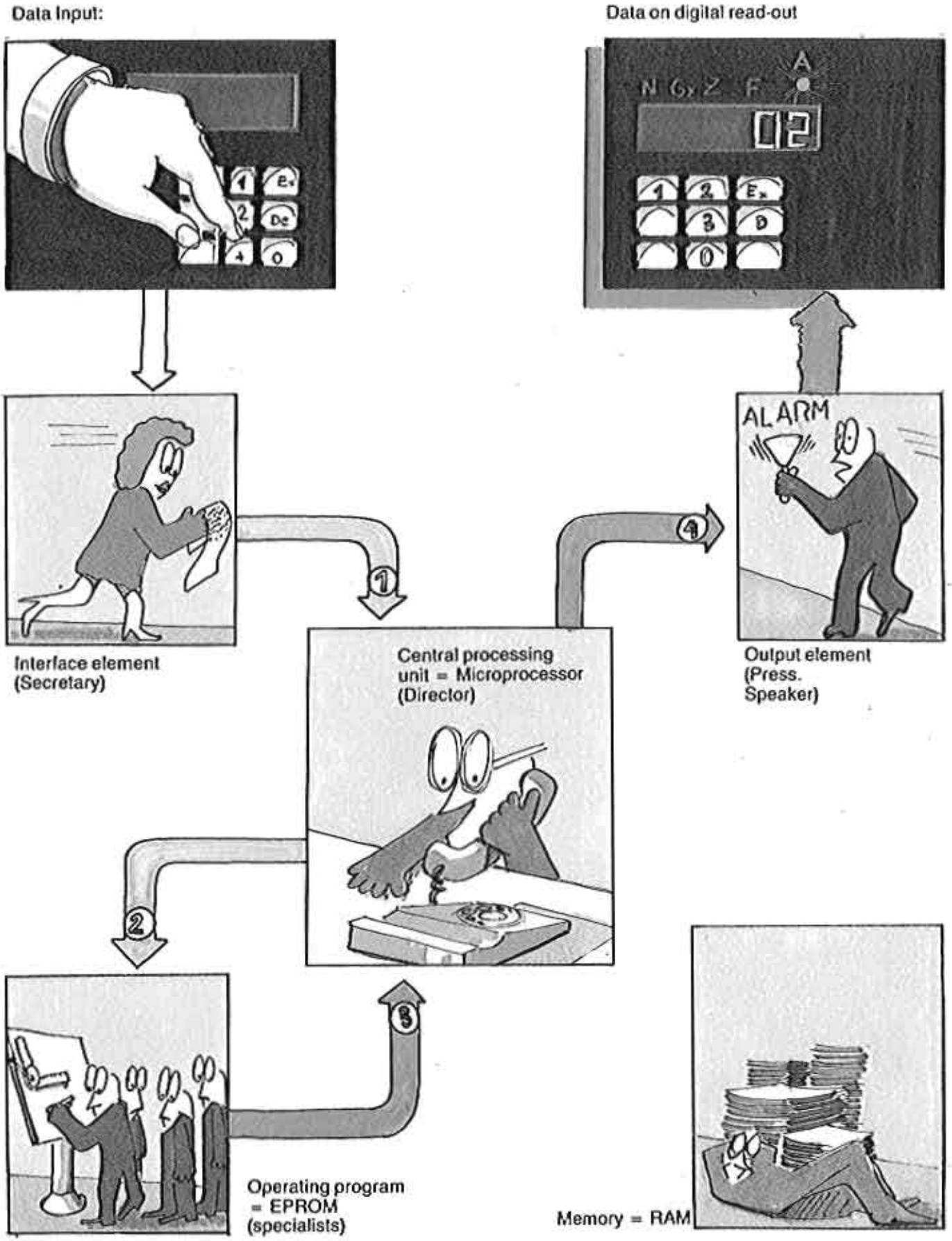

Measures for alarm signs

The alarm signs A00/A01/A02/A03/A04/A07 will appear as soon as you put in an undefined value (put in = press INP key).

Example: Put in the following program:

N	G	X	Z	F
00	00	8000		

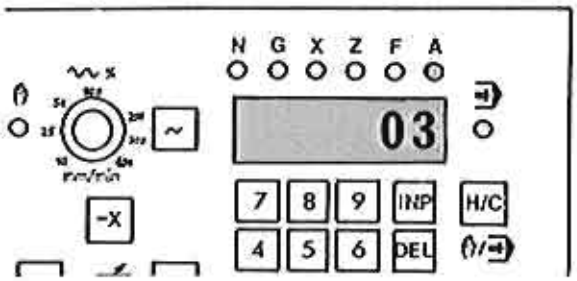

The value X 8000 is too big. As soon as you put in 8000 and press the INP key, the alarm sign will appear. On the digital read-out the type of alarm, in this case A03 = X-value too big, will be indicated.

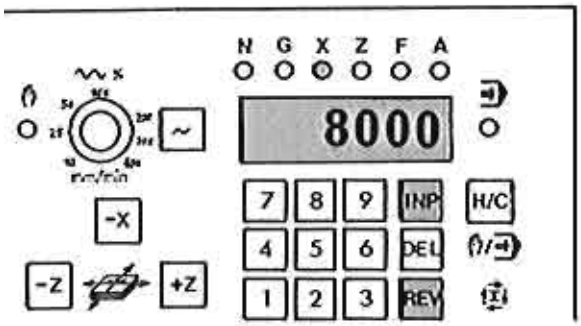

Measures:

1. Press INP + REV at the same time. The alarm sign disappears and the entered X-value appears.

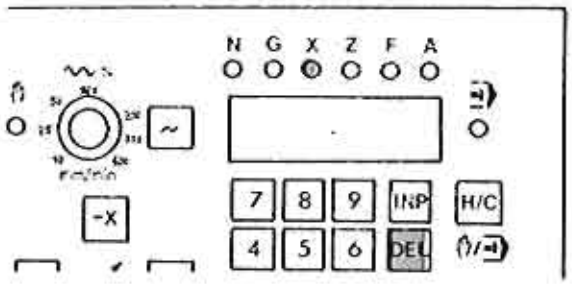

2. Press DEL and the X-value 8000 will be cancelled.

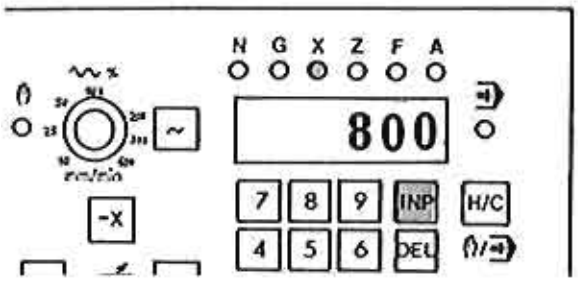

3. Put in correct X-value (e.g. X-800), press INP; now the correct X-value is registered, the word indication jumps to the next letter.

Main spindle speed too high for threading

The alarm sign A06 does not appear during the program input (or when pressing the START key), but during the program operation itself.

Before a block G33 or G78 is started, the computer checks the main spindle speed. If it is too high, the alarm A06 appears. The program is interrupted.

Measures:

1. Lower spindle speed (either change pulley position or use potentiometer).

2. Press [INP] + [REV].
   The alarm sign will disappear. The program operation can continue.

7. Magnetic Tape Operation

Modes of operation: SAVE, CHECK	7. 1 - 7. 5
Mode of operation: LOAD	7. 7
Summary	7. 9
Alarm signs	7. 11
Alarm A 08	7. 13
Alarm A 09	7. 15
Alarm A 10/A 11	7. 17
Alarm A 12	7. 19 - 7. 21
Mode of operation:ERASE	7. 23
Program interruption	7. 23
Putting in the tape	7. 25

Magnetic Tape Operation

The tape enables you to store programs and to feed them into the computer memory.

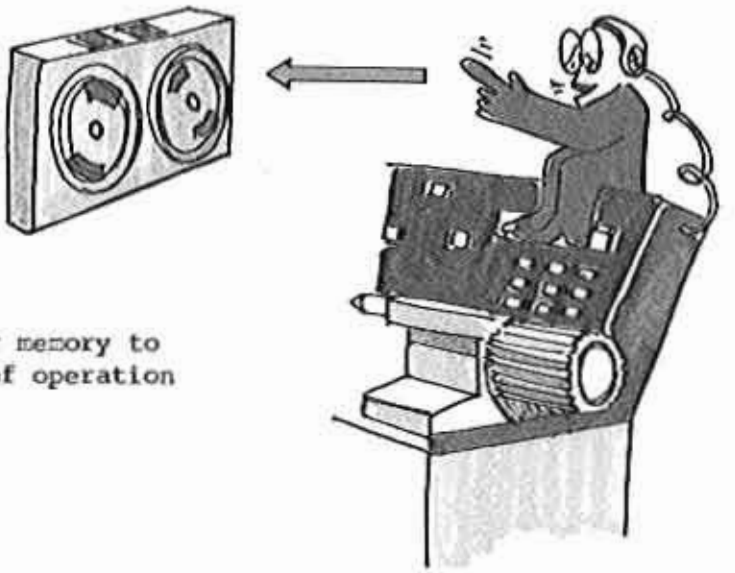

1. Storing on tape

To transmit from computer memory to tape: We call this mode of operation SAVE or CHECK.

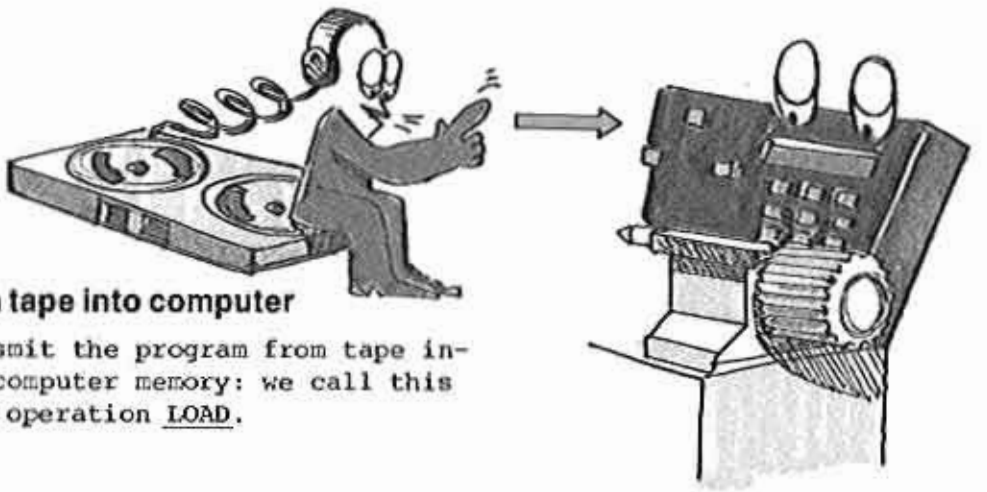

2. From tape into computer

To transmit the program from tape into the computer memory: we call this mode of operation LOAD.

Some data

- Memory capacity per tape side: approx. 4oo blocks.
- Operation time per tape side: approx. 9o sec.

Operation advice

1. Use only digital cassettes
2. Erase new cassettes completely (see page 7.23). The test impulse from the final control of the producer can cause Alarm A11 or A12.
3. Main drive motor must not run during LOAD, CHECK, SAVE and ERASE operation.
4. Do not put down tape near main motor.

Magnetic Tape Operation

Transmission of a program from machine memory to magnetic tape

Mode of operation

SAVE = transmit from machine memory to magnetic tape
CHECK = control of transmitted (loaded) program

1. Press key [→] until word indication G lights up. Press key [DEL].
   The indicated value disappears from the digital read-out.

2. Put in G65.

   Press keys [6][5][INP]. On the read-out you see C indicated. [C| | | |]
   magnetic cassette tape operation.

3. Press key [FWD].

   On the read-out appears [C| |P| |]

4. Put in program number.

   You can put in figures ooo - o99
   oo - o9
   o - 999
   The sequence of the figures can be chosen as you like. Example for input of a program with number 76: Press keys [7][6].

5. Press key [INP].

   The transmission / loading starts.

5.1. First free space on the tape is sought.
   If there are not data on the tape, it will advance approx. 4 seconds and rewind approx. 2 seconds.

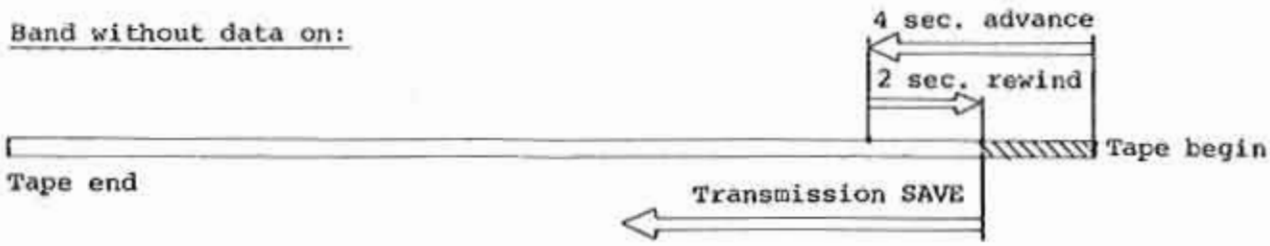

If there are already data/programs loaded on the tape, then the tape will advance to the end of the program which was loaded last. Then advance 4 seconds and rewind 2 seconds.

Tape with programs already loaded:

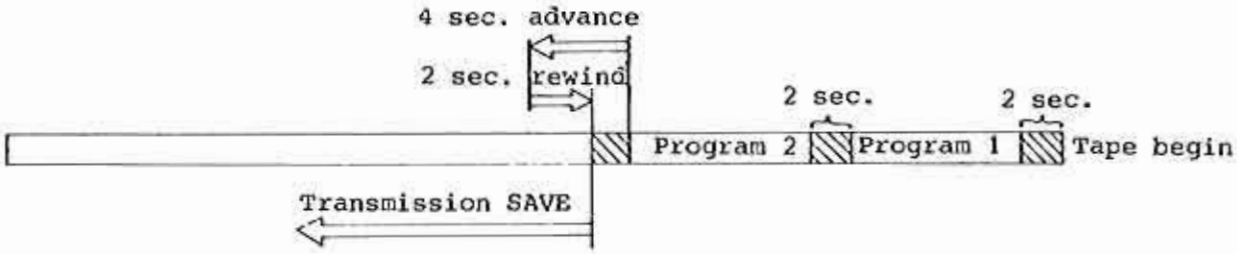

5.2. Transmission operation SAVE

The digital read-out indicates C S A
SA is the abbreviation for SAVE.
The program/data are "saved" from the machine memory - where they could be deleted - onto the tape.

5.3. At the end of the transmission operation the tape rewinds to the tape start.

5.4. Control operation CHECK

The digital read-out indicates C C H
The data in the machine memory are compared with the data loaded on the tape.
If you have already programs loaded on the tape, then the digital read-out will indicate these on the read-out whilst the tape advances. It will advance to the program loaded last and then the "CHECK" will be carried out.

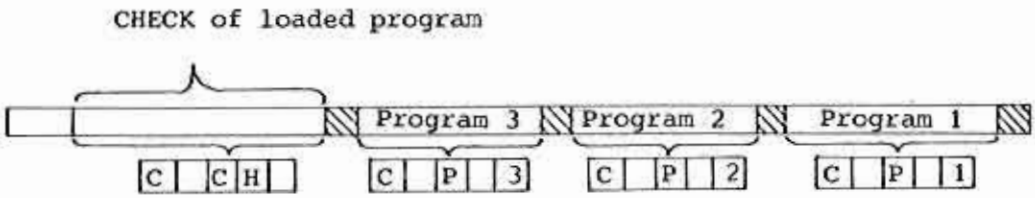

6. After CHECK the tape rewinds. The program is loaded on the tape.

Please never take out tape during operation!

Transmission of program from tape to machine memory

Mode of operation LOAD

1. Press key [→] until word indication G lights up. If a figure of the G-function appears, press key DEL. Then indication on read-out disappears.

2. Put in G65.

   Press keys [6][5][INP]. Read-out indicates [C| | | |]

3. Press key INP.

   Read-out indicates [C| |P| |].

4. Put in number of program.

   E.g. for program number 76 you press keys [7][6]. On read-out: [C| |P|7|6]

5. Press key [INP].

5.1. The program number [7][6] is looked for.
   If you have other programs on the tape already, then these numbers appear on the digital read-out.

   E.g. [C| |P|7|4|] or [C| |P|7|5]

5.2. Loading:

   When the wanted program 76 is found, the loading operation starts.

   On the digital read-out you see [C| |L|O|] .
   LO is the abbreviation for "load".

5.3. After the loading is done, the tape rewinds. The read-out shows NOO.
   Program number 76 is stored in the machine computer.

6. If you press key [START] then the program starts operating.

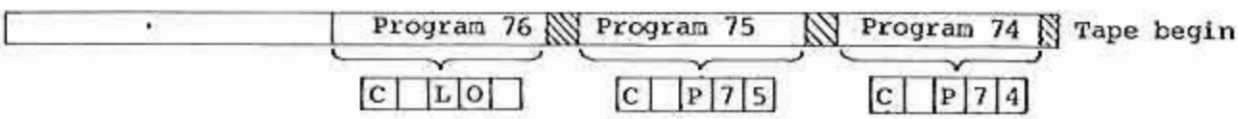

From tape to machine	From machine to tape
LOAD	SAVE, CHECK
1. Put in G 65 G [ ][ ][ ][6][5]	1. Put in G65 G [ ][ ][ ][6][5]
2. Press [INP] [C][ ][ ][ ][ ]	2. Press [INP] [C][ ][ ][ ][ ]
3. Press [INP] [C][ ][P][ ][ ]	3. Press [FWD] [C][ ][P][ ][ ]
4. Put in program number [C][ ][P][.][.]	4. Put in program number [C][ ][P][.][.]
5. Press [INP] Program is sought and will be loaded in machine. [C][ ][L][O][ ]	5. Press [INP] - Free space on tape is sought. - Machine program is transmitted/ loaded on tape (SAVE) [C][ ][S][A][ ] - Loaded program on tape is checked/ compared with machine program. [C][ ][C][H][ ]
6. If program is loaded in machine, then read-out indicates: N [ ][ ][ ][ ][∞] Program can be started.	6. If operation is through, then indication on read-out: N [ ][ ][ ][0][0]

Alarm Signs – Tape Operation (Summary)

A08 - Tape end reached during loading of program from machine memory to tape (only with mode of operation SAVE)

A09 - Selected program cannot be found (mode of operation LOAD). Tape is full. G22 is not put in in selected program (mode of operation LOAD).

A1o - Writing protection active

A11 - Loading mistake

A12 - Checking mistake

General

When switching off machine (also when current breaks down) an interference pulse is put onto the tape. This interference pulse does not have any effect since the loading start only after 2 seconds of tape advance.

Thus:

Tape has to be rewind (automatically). Never take tape out during rewind operation.

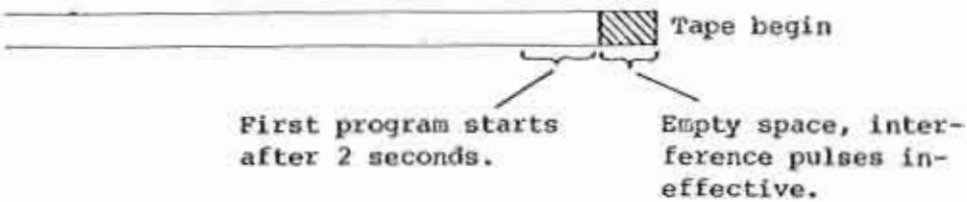

Alarm sign A08:

Only when using mode of operation "SAVE"!

Reason

Tape finish during loading (SAVE) from machine memory to tape.
(A08 only when using mode SAVE)
Alarm sign A08 appears on digital read-out.

Measures

- Press INP and REV.
  Tape rewinds to tape begin.

  Digital read-out indicates N00.
- Put in new tape and repeat loading operation.

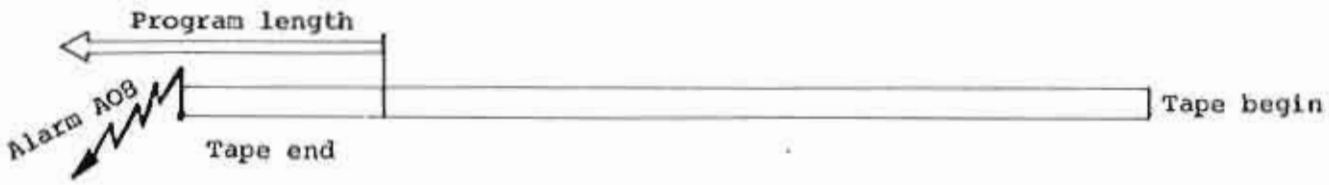

Attention:

If you put in this tape and want to load the next finished program (transmit from tape to machine memory) A09 appears " No program end found!

Alarm sign A09:

Only when using mode of operation "LOAD"!

A09 – Reason 1

Selected program not found.
If you call a non-existing program number when "loading" (from tape to machine memory), then alarm A09 appears.

Measures

- Press [INP] + [REV]
  The tape rewinds. The digital read-out indicates after that N00.
- Look for program on another tape (in case you are sure you put it in).

Example: You look on this tape for program no. 5

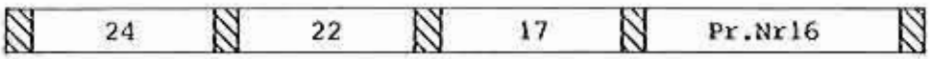

A09 – Reason 2

Selected progran not fully on tape (G22), since tape was finished when loading from machine memory to tape (already in mode of operation SAVE you had alarm A08).

Measures

- Press [INP] + [REV]
  Tape rewinds, read-out indicates N00.
- Look for program on other tape (in case you are sure that you put it in)

Example: You call on program no.19

Program 19 does not have G22, thus alarm A08 was indicated already during mode of operation SAVE.

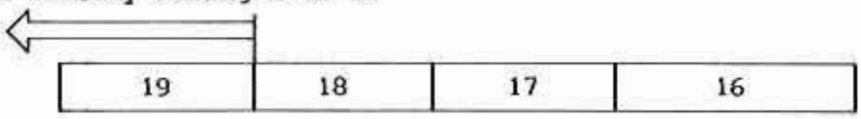

A10 – Writing protection active:

Only when using mode of operation "SAVE" and "ERASE"!

If you remove the writing protection (i.e. the black caps) you cannot put any more data on this tape side.

If you put in such a tape side and you want to transmit a program from the machine memory to the tape, alarm sign A10 appears.

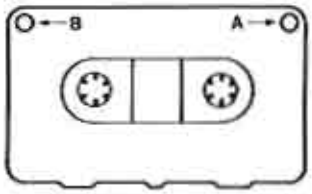

Measures:

Press [INP] + [REV]
Tape rewinds, put in other tape or mount writing protection again.

A11 – Load mistake:

Only when using mode of operation "LOAD"!

A11 – Reason 1

Motor is switched on or is being switched on during loading (tape-machine).
The program on the tape was not destroyed by switching on the motor.

Measures

- Switch off motor
- Press [INP] + [REV]
  The tape rewinds, the read-out indicates N00.
- Repeat loading operation.
- If you have A11 indicated also with the following loading operation, please see reason 2.

A11 – Reason 2

The program on the tape is destroyed. The reasons for it could be a mechanical fault on the tape, a power failure - or the machine was switched off when tape was not rewound.

Measures

Transmit program to new tape.

Summary measures

ALARM A11

↓

Repeat loading

↙ ↘

No alarm A11

Reason was interference when loading

Alarm A11

Reason was mistake on tape

A12 – Check mistake:

Only when using mode of operation "CHECK/SAVE"!

Possible reasons:

- Tape faulty
- Interference pulse: main motor switched on, short power failure, interference pulse from electrical conductor (lightning, switching on of soldering transformer ...)

  The interference pulses can happen both when using mode of operations SAVE or CHECK.

Alarm sign A12 in mode of operation "SAVE" – Remedy

Store program under another number.

Explanation:

You cannot delete the false program just by its own. Thus you have to give to this program a new number, if you store in on the same tape. If you would use the same program number, then alarm A11 would appear when loading (tape - machine) since only the first one of two identical program numbers can be called on.

Measure:

- Put in [INP] + [REV], tape rewinds, readout shows NOO.
- Put in same program under a new number.
- If alarm A12 appears again, then tape is defective.

Interference during SAVE

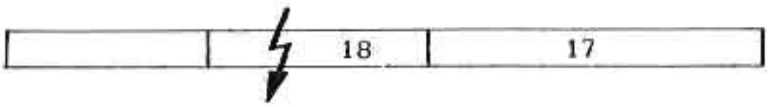

Same program has to be put in under new program number.

Alarm sign A12 in mode of operation "CHECK"

During CHECK operation there may occur an interference impulse and alarm sign A12 will be indicated, without a defective tape being the reason.

Check:

- Press INP + REV.
  Tape rewinds to begin, on read-out NOO.
- Load tape into machine memory. If there is no alarm A11 when loading, then the program is o.k.
- During loading A11 is indicated: the following is necessary - New tape, delete complete tape or put in program anew under another number.

Measures - Summary

↓

Repeat loading

No alarm A11:

Tape o.k.

Alarm A11:

Tape defective

- New tape
- Delete tape
- Put in program under another number.

Mode of operation"ERASE" (Erasing the tape)

1. Press key [→] until word indication G lights up. If you see a figure of a G-function indicated on the digital read-out, then press [DEL].

2. Put in G65

Press 6 5 INP, on the display you see see [C| | | | |]

3. Press [→] + [DEL] at the same time, on the display you see [C| |E|r|]
The tape is erased.
After that the read-out shows N00

Program Interruption during Tape Operation

Only when using mode of operation LOAD, CHECK, ERASE.

Program interruption

Press [INP] + [REV].
Tape rewinds to tape begin.

Why program interruption?

When using mode of operation LOAD:

If you find out that you called a non-existing program. If you press [INP] + [REV] the tape will not advance to the tape end but rewind immediately.

When using mode of operation CHECK:

If you do not want to wait for CHECK operation.

When using mode of operation ERASE:

It is enough that you erase about 1o seconds. When loading anew the tape machine will erase automatically all other remaining data.

When putting in the Tape, pay Attention:

1. Putting in with left spool full

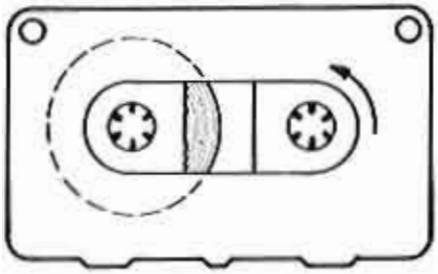

- If you switch off the machine, the tape advances 1 second.

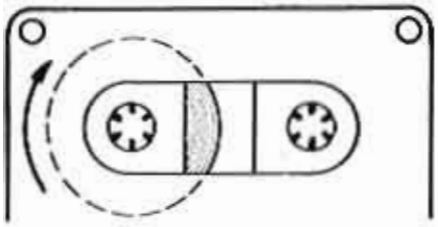

- If you switch on the machine, the motor rewinds the tape 2 seconds. So it is made certain that the tape is at the very begining.

2. Putting in with right spool full

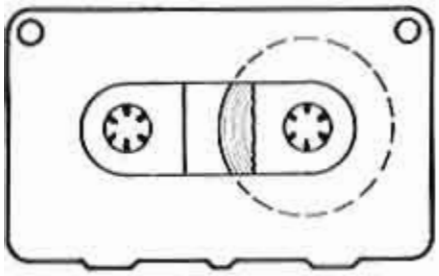

- If you put in the tape and program G65, then the tape rewinds to the begining.

- If you put in the tape and not program G65, and switch on and off the machine, the following happens:

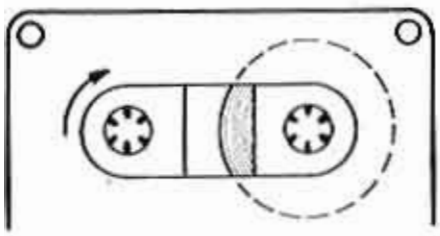

Switch on:

The tape rewinds 2 seconds.

Switch off:

The tape advances 1 second.

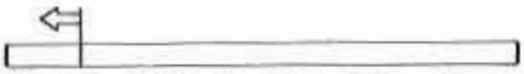

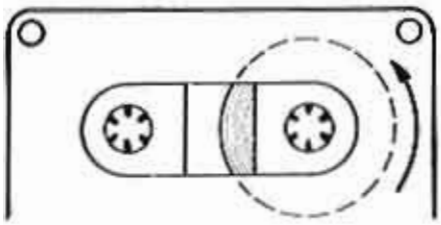

If you carry on like this, the tape moves further through the switching on and off and you get an interference pulse on the tape. A stored program will be registered.

8. Tools

Position of toolholder	8.1 - 8.3
Turning tools	8.5 - 8.15
Pre-adjustment of tools	8.17 - 8.21
Radius compensation (the equidistant)	8.23 - 8.31

tools

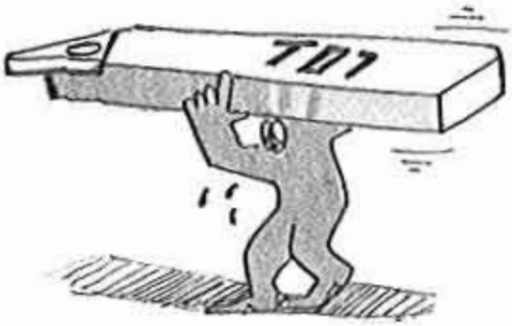

With industrial CNC-machines the tools can also be programmed and this under address T (T = abbreviation for tool). The change of tools is done automatically.

The programmer must know the various tools, their application and also their actual position to each other, when writing a program.

The tools are being positioned by means of a tool pre-setting gauge, the edges are drawn on a tool sheet. From this tool sheet the programmer can see the position of the edges in X- and Z-direction. Further more, technological data, such as recommended cutting speeds, feeds etc.

On the Compact 5 CNC we do not have an automatic tool change. We position the tools with a pre-setting gauge directly on the machine. With this gauge we determine the position of the various tool bits to each other.

When writing a program in which we want to use various tool bits, we have to take into account these positions. Put in the tools in your programming sheet under column remarks.
Pay attention: program hold (G20) before tool change!

Positions of Toolholder

The toolholder can be clamped in front position and in back position.

Front position

Outside diameter
ø 0 to ø 8o mm

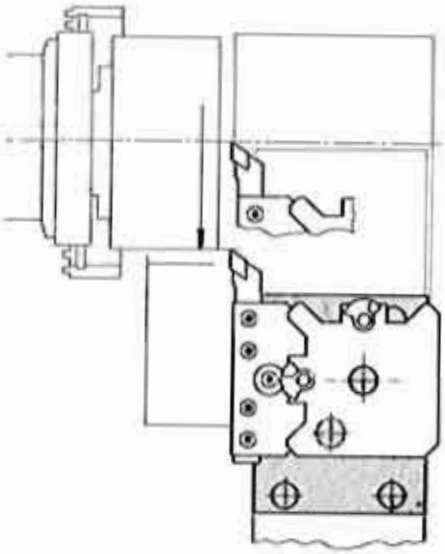

Interior diameter
ø 14 to ø 1oo mm

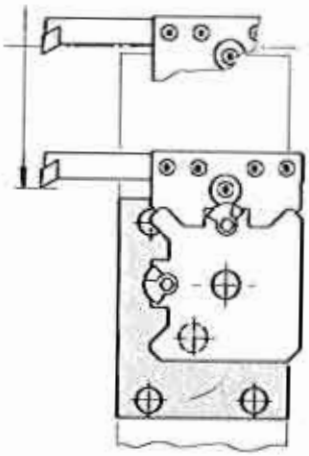

Back position

Outside diameter
ø 2o to ø 12o mm

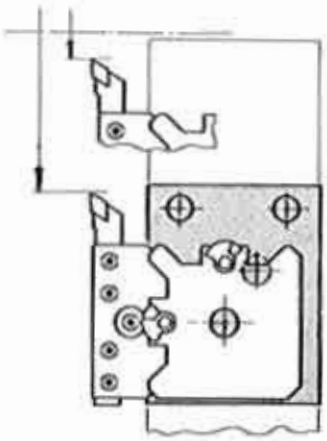

Interior diameter
ø 5o to ø 13o mm

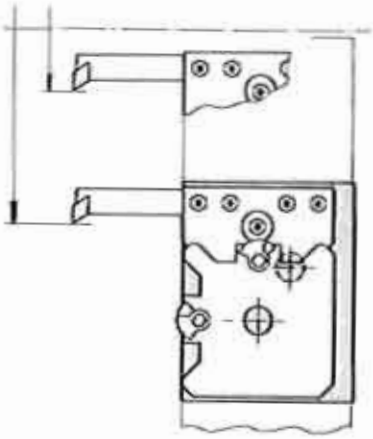

Please clamp the toolholder in the front position for our programming exercises.

The Right Hand Side Tool (T01)

Dimensions – Applications

The exercises make it possible to use the right hand side tool for all programming work, part 1.
Further tools are explained in part 2 of the programming exercises.

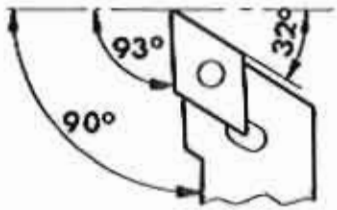

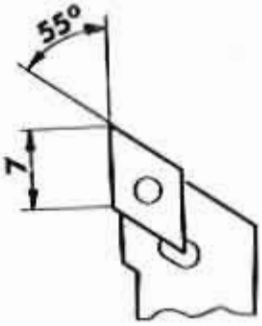

Examples of application:

Clearance angle $\varkappa = 93^{\circ}$

1. Longitudinal turning, facing and angle turning:

up to α = max. 90°
The depth of cut "a" with facing must not be bigger than 0,3 mm, otherwise the chip flow is bad.

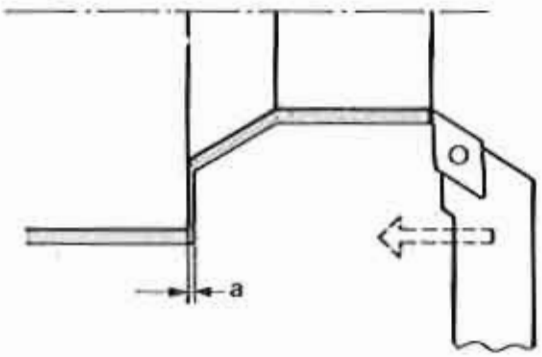

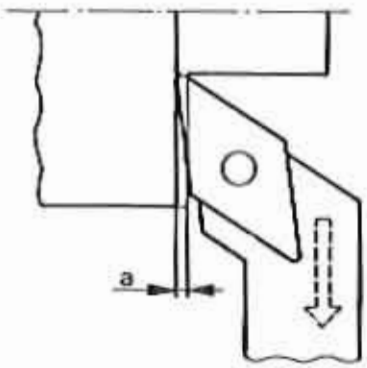

2. Shape turning:

β must not be bigger than 30°, otherwise there will be insufficient clearance angle.

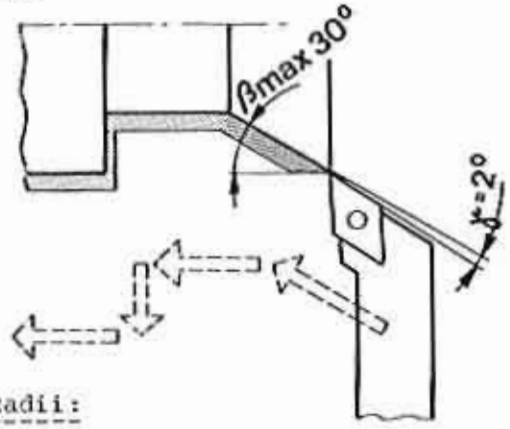

3. Radii:

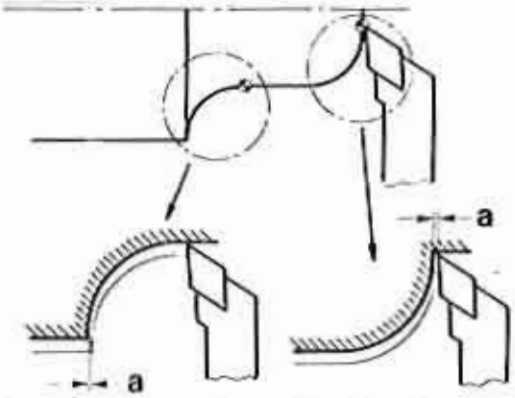

Depth of cut at the end of the 4th part of circumference max. 0,3 mm

Depth of cut at the Start of the 4th part of circumference max. 0,3 mm.

OPERATING HINT 1

If you set the toolholder in another angle position, $\varkappa = 100^{\circ}$, you can take bigger cuts when facing.

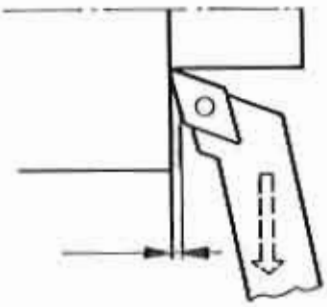

OPERATING HINT 2

Move with the transparent scale drawing of the tool bit along the shape of the drawing. You will immediately see if the depth of cut is too big.

The Left Hand Side Tool (T02)

Dimensions – Applications

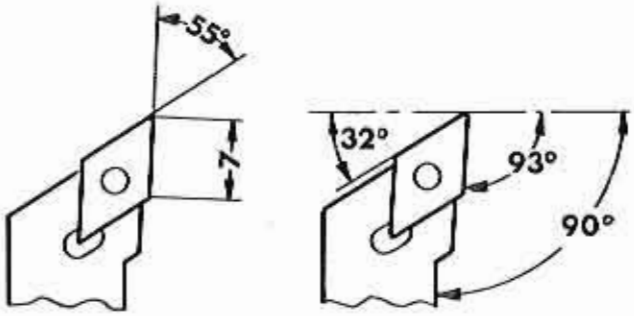

Clearance angle $\varkappa = 93^{\circ}$

1. Longitudinal turning, facing, taper turning:

The depth of cut with $\varkappa$ 93° when facing must not be higher than o,3 mm, since the edge would not cut anymore.

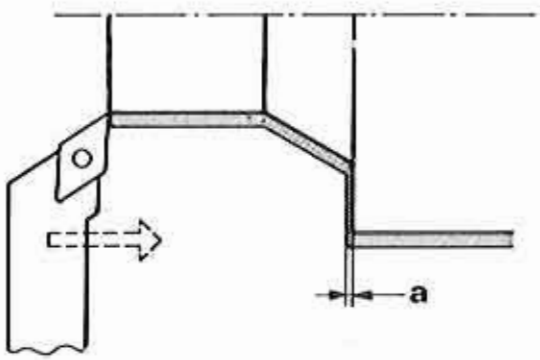

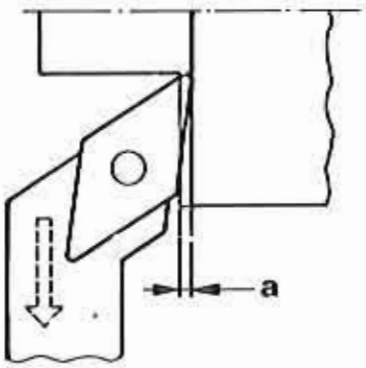

2. Shape turning

γ must be at least 2°, β max. 3o°.

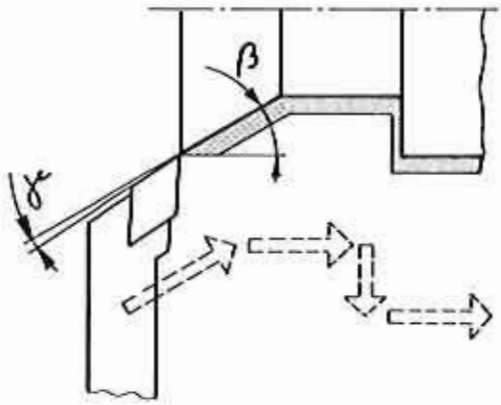

3. Radii

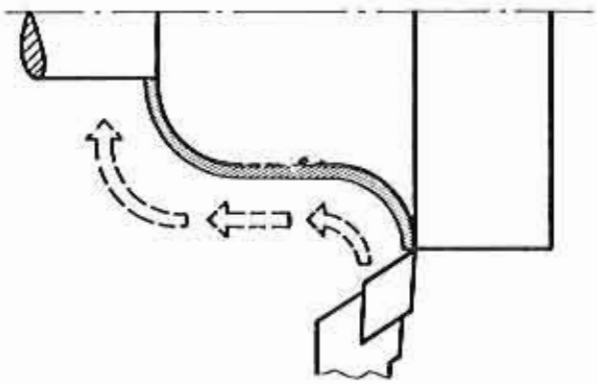

OPERATING HINT 1

If you set the tool in another angle position, $\varkappa$ = 1oo°, you can take bigger cuts when facing.

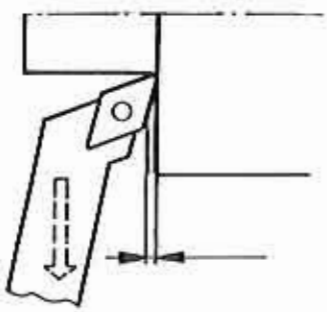

OPERATING HINT 2

Move with the transparent scale drawing of the tool bit along the shape of the drawing. You will immediately see if the depth of cut is too big.

The Neutral Tool (T03)

Dimensions – Applications

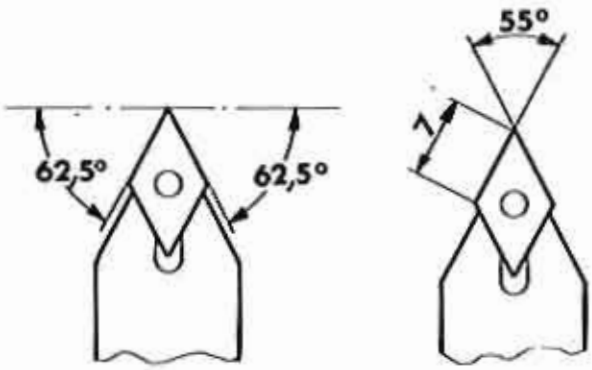

Examples of application with $\varkappa = 90^{\circ}$

1. Longitudinal and angle turning

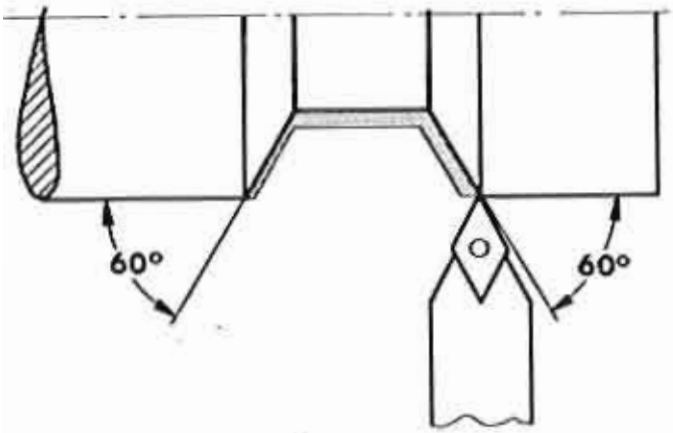

Max. angle 60°
Clearance angle of $2,5^{\circ}$

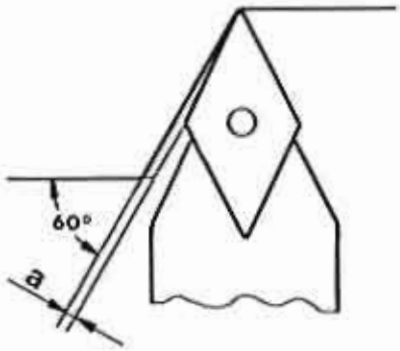

The max. depth of cut (a) when turning outwards must not be bigger than 0,3 mm with a turning angle of 60°.

2. Turning of partial radii

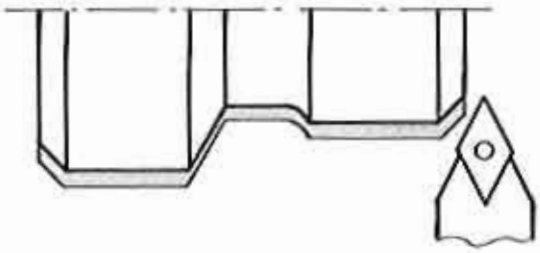

The tangent of the arc must not be higher than 60°.

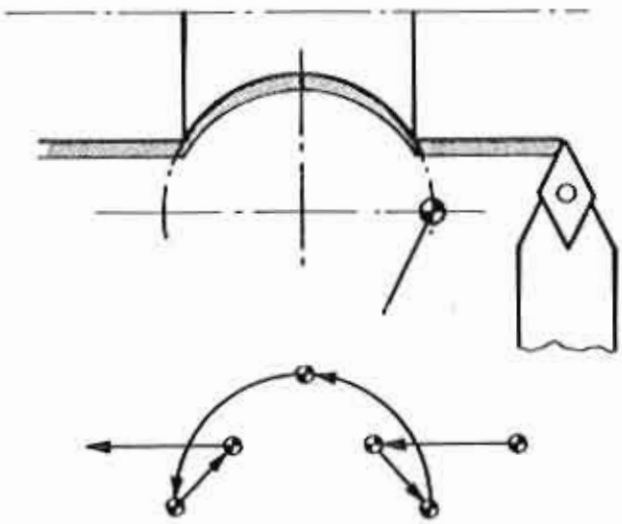

On the pages 8.5 to 8.15 metric sizes are shown. Calculate inch sizes yourself.

o,3 mm = .o12" (approximation)

Parting-off Tool HSS (T06)

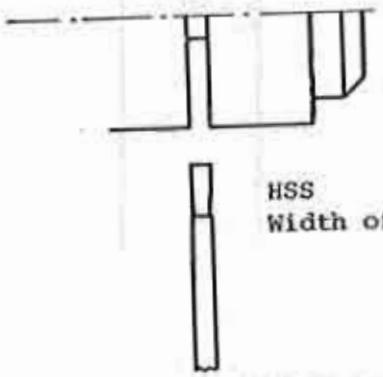

HSS
Width of tool: .14o"

Internal Threading Tool, right hand (T07)

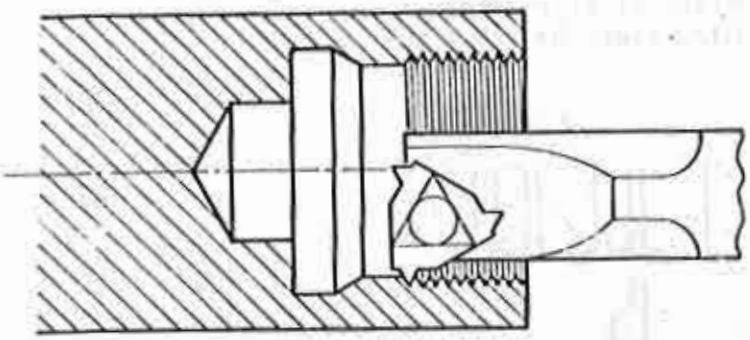

From minor thread dia. .55o"

Indexable tips:

For threads 16-48 tpi. and o,5-1,5 mm pitch

Clearance angle: 6o°

External Threading Tool, right hand (T04)

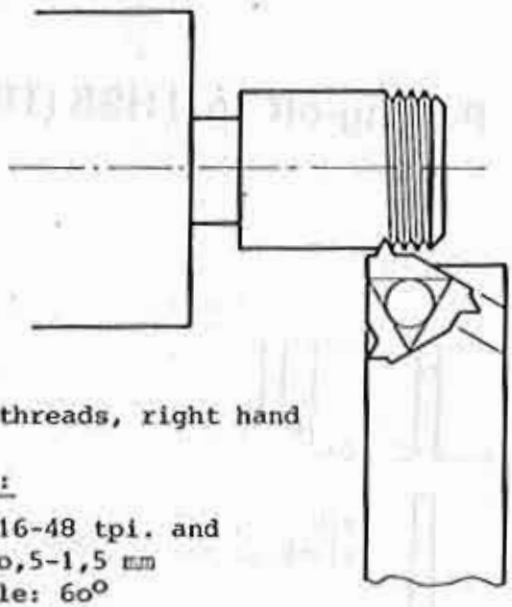

For external threads, right hand

Indexable tip:

For threads: 16-48 tpi. and
o,5-1,5 mm
Clearance angle: 6o°

Plunge Cutting Tool (T05)

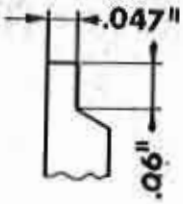

Width of tips:.047"
Max. depth of cut:.06"

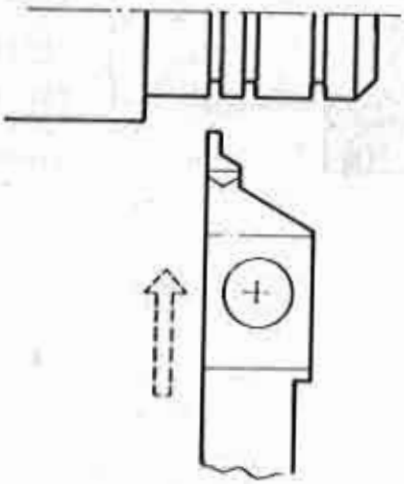

External Threading Tool, right hand (T04)

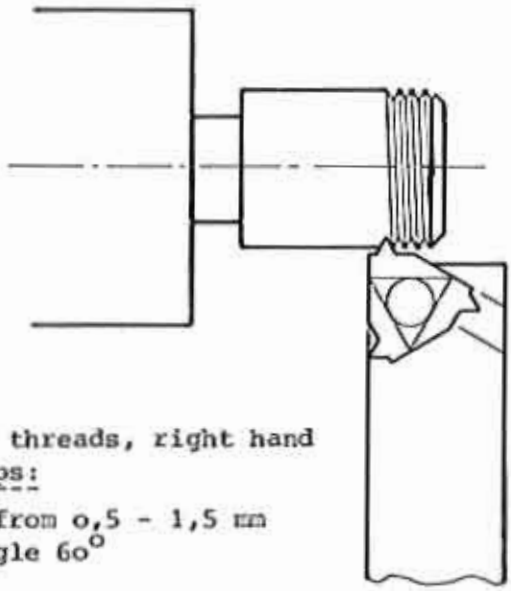

For external threads, right hand
Indexable tips:

For pitches from o,5 - 1,5 mm
Clearance angle 6o°

Plunge Cutting Tool (T05)

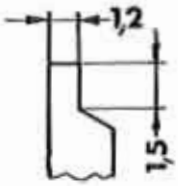

Width of tips: 1,2 mm
Max. depth of cut: 1,5 mm

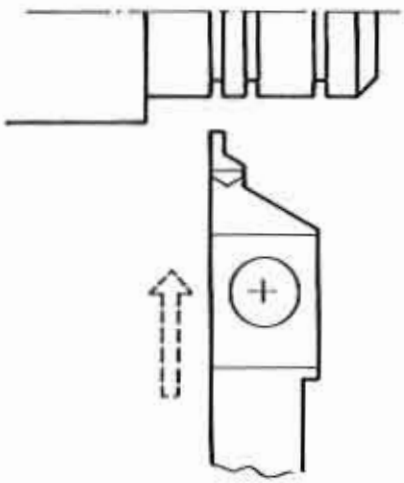

Parting-off Tool HSS (T06)

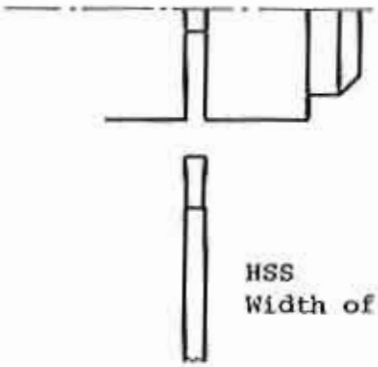

HSS
Width of knife: 3,5 mm

Internal Threading Tool, right hand (T07)

From minor thread dia. 14 mm on.

Indexable tips:

For pitches from o,5 - 1,5 mm
Clearance angle 6o°.

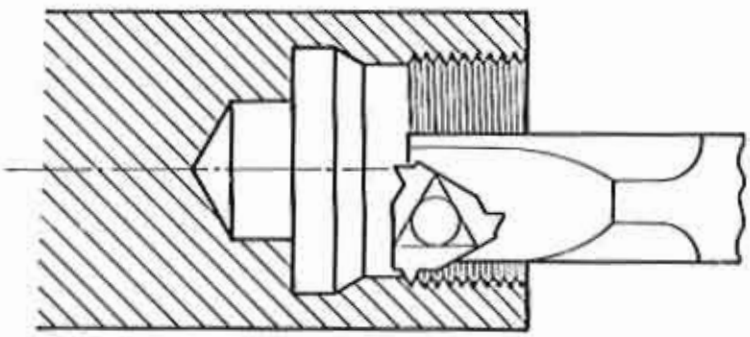

Inside Turning Tool (T08)

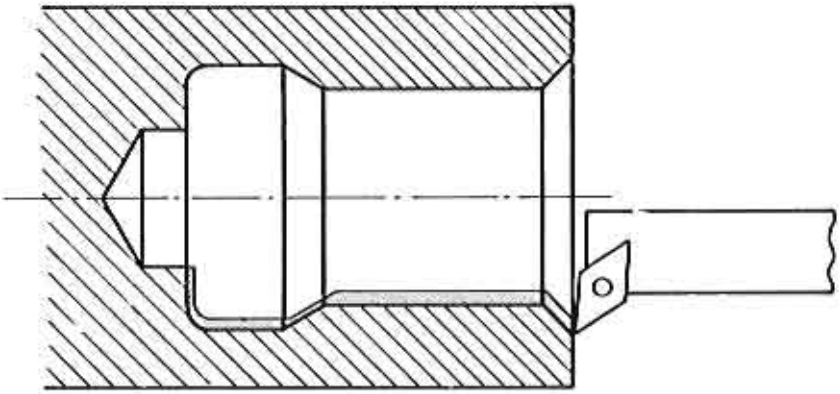

From dia. 14 mm on.

Dimensions:

Max. clearance angle when turning inwards: 9o°
The max. depth of cut is only o,3 mm

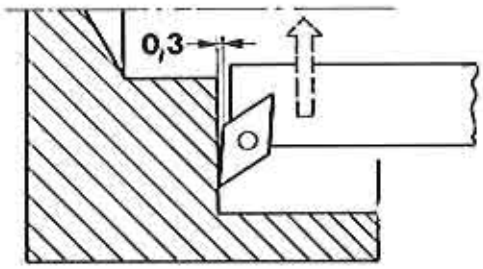

Max. clearance angle when turning outwards: 3o°

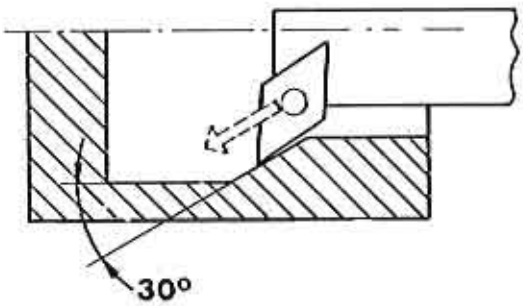

Presetting of tools

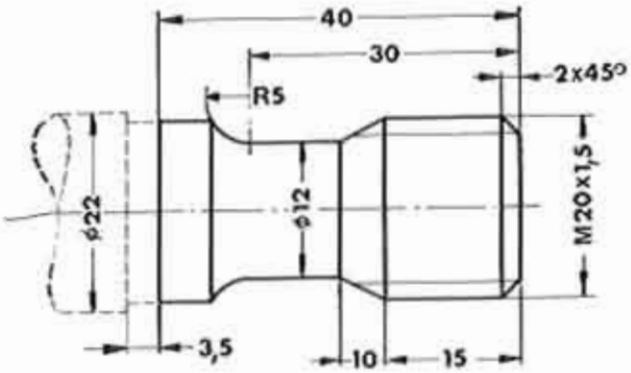

For the manufacture of most workpieces a few tools are necessary. E.g. right hand side tool, threading tool, parting-off tool.

When setting up the program you have to know the positions of the various tools to each other in X- and Z-direction.

1 . Right hand side tool

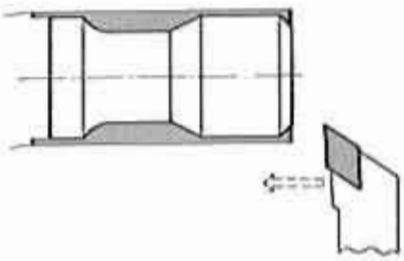

2. Threading tool

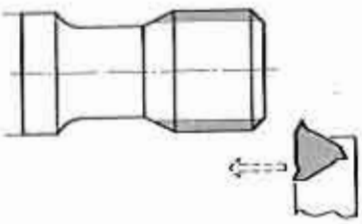

3. Parting-off tool

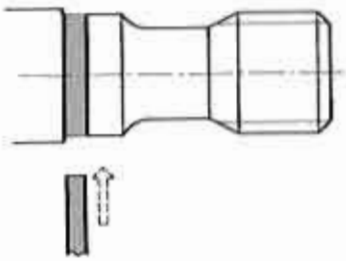

Procedure

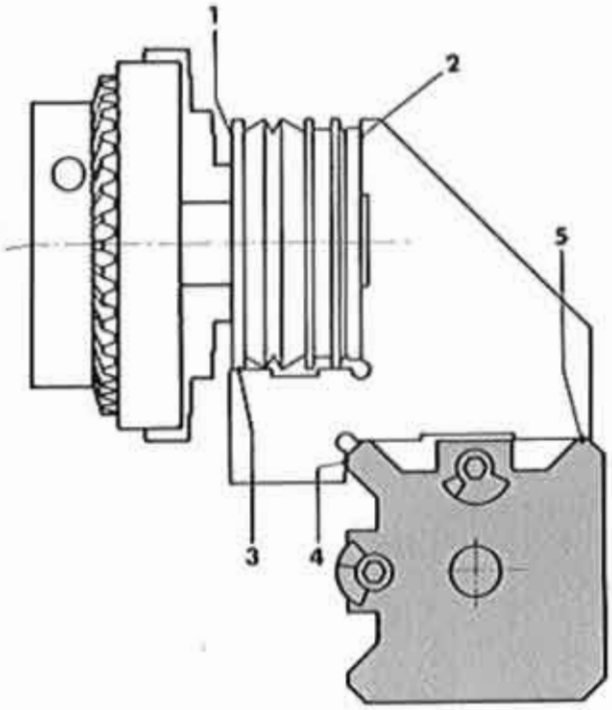

1. Position all tool bits in the toolholder at center height.

2. Mount setting gauge in 3-jaw chuck. Pay attention that the plane surface of the setting gauge (1) touches the jaws of the chuck.

3. Position of toolholder body:
   - Loosen clamping screw of toolholder body.
   - Put template horizontally onto setting gauge, points 2 and 3 must touch setting gauge.
   - Move longitudinal and cross slide by hand until toolholder body is near points 4 and 5.
   - Press toolholder body by hand against the template and clamp it.

4. Set X- and Z-value on digital readout at zero.

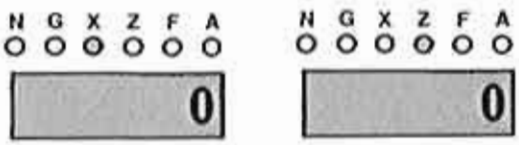

Positioning of turning tools

1. Right hand side tool T01
X = 0 mm
Z = 0 mm

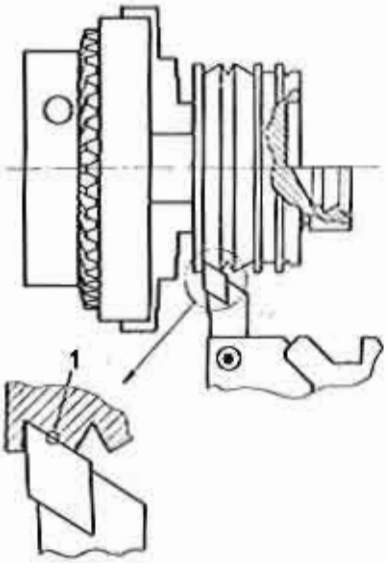

1. Right hand side tool T01

- Loosen clamping screws for turning tool and move it backwards in toolholder.
- Clamp toolholder onto toolholder body.
- Move right hand side tool into groove and position it such that the carbide tip aligns with surface 1.
- Clamp right hand side tool in this position and remove toolholder.

Attention:

Press tool only slightly and then position.

In the same way as the right hand side tool all other tools are to be preset.

When setting the right hand, left hand or neutral side tool, the position of the toolholder body remains the same. For all other tools the position of the slides must be changed.

Starting point for the measures is the position which you fixed with the template.

2. Traverse of left hand side tool (T02)

X = 0 mm
Z = 0 mm

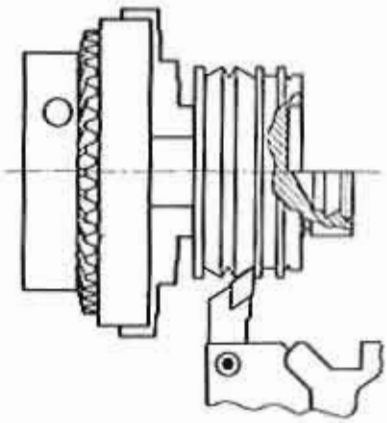

3. Traverse of neutral side tool (T03)

X = 0 mm
Z = 0 mm

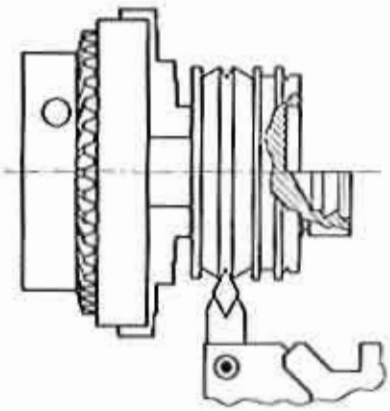

4. Traverse of threading tool for external threads (T04)

X = 0 mm
Z = + 21,00 mm

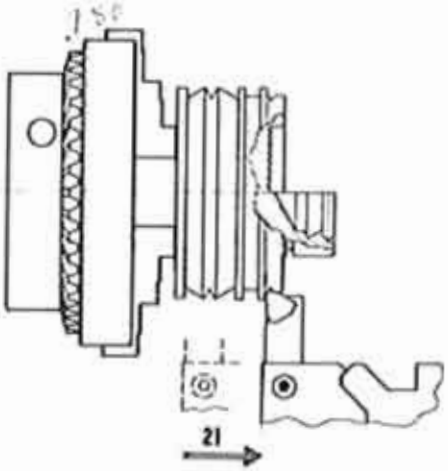

5. Traverse of plunge cutting tool (T05)

X = 0 mm
Z = + 27,00 mm

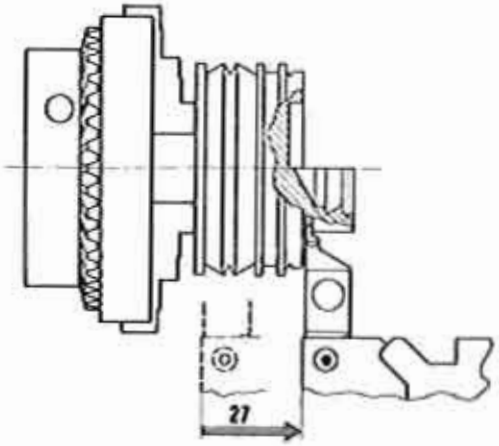

6. Traverse of parting-off tool (T06)

X = 0 mm
Z = + 16,00 mm

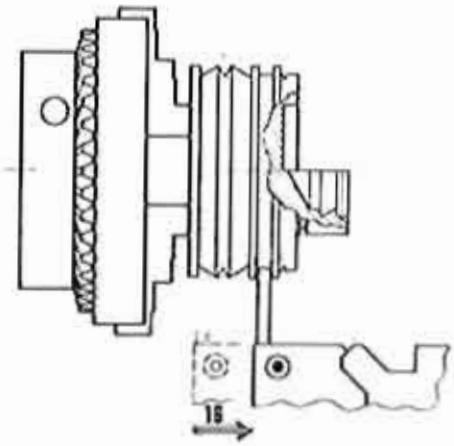

7. Traverse of internal threading tool (T07)

X = - 22,5 mm
Z = + 58,0 mm

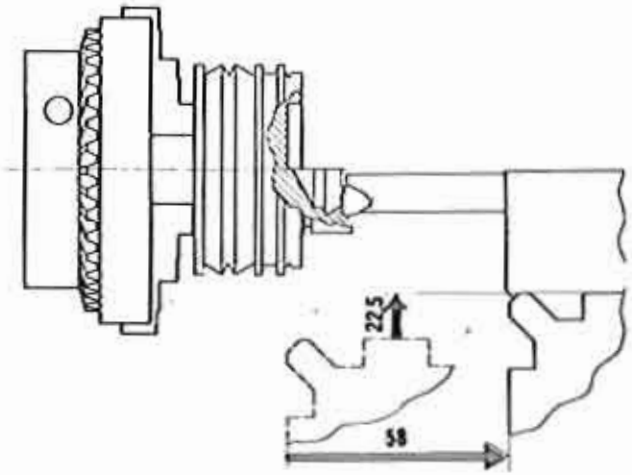

8. Traverse of inside turning tool (T08)

X = - 22,5 mm
Z = + 52,0 mm

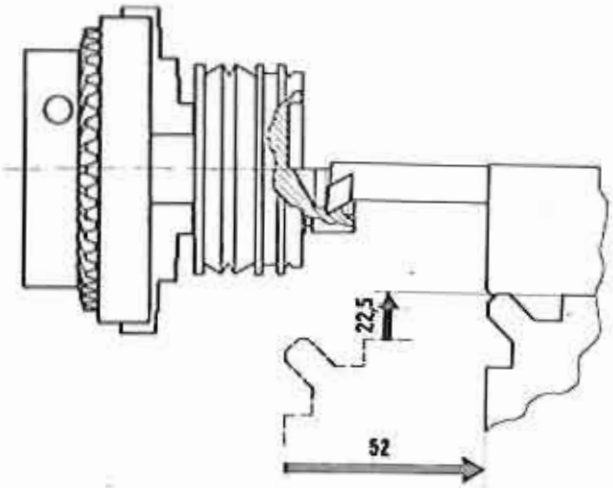

Positioning of cutting edges of tools to each other, if slide position remains unchanged

The values must be considered when programming. Reference point is the position of the right hand side tool.

Neutral Side Tool
L = 0 mm
Q = + 7,00 mm

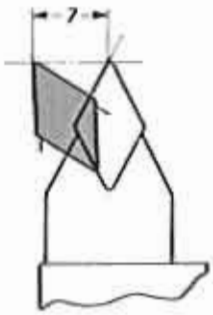

Left Hand Side Tool
L = 0 mm
Q = + 14,00 mm

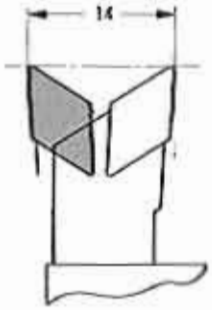

Parting-off Tool
L = 0 mm
Q = 0 mm

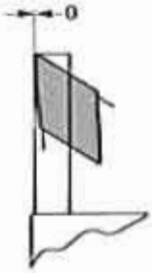

Outside Threading Tool
L = 0 mm
Q = + 2,00 mm

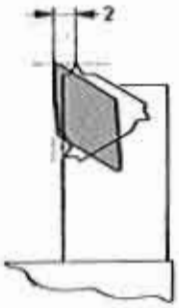

Pluning Cutting Tool
L = – 10,00 mm
Q = 0 mm

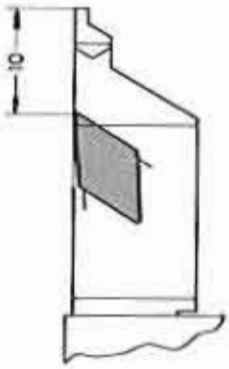

Inside Threading Tool
L = + 10,00 mm
Q = – 20,00 mm

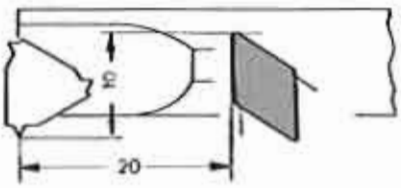

Inside Turning Tool
L = + 10,00 mm
Q = – 20,00 mm

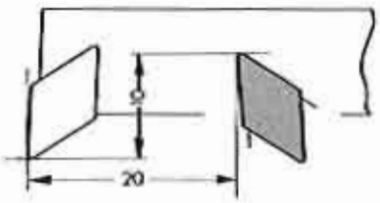

Example

Turning of an annular tee-slot and parting-off

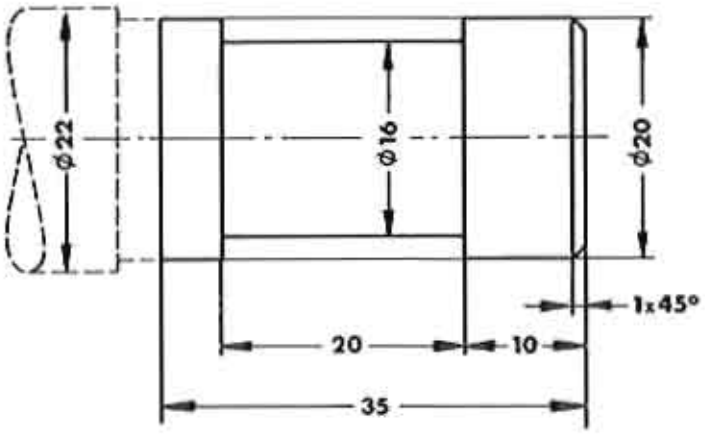

1. Right hand side tool (blocks N00 to N13):

At the end of block N13 the right hand side tool is at the indicated position.

N	G	X	Z	F
⋮				
10	01	-200	-400	100
11	01	0	-1600	100
12	01	200	0	100
13	00	500		
14	21			

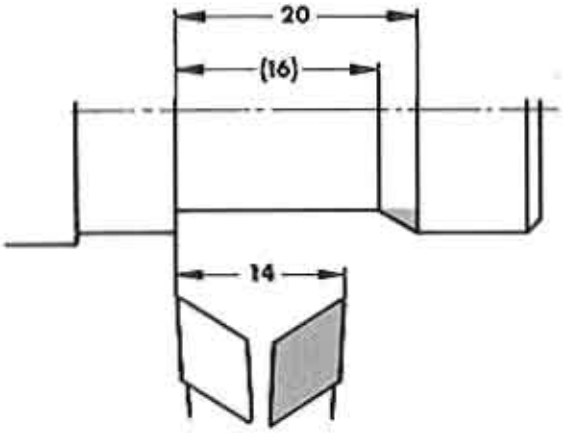

2. Left hand side tool:

Traverse of position Q = + 14,00 mm. This measure must be taken into account when you program the following blocks.

15	00	-600		
16	01	0	600	100
17	01	100	0	100
18	00	0	-500	
19	00	-200	0	
20	01	0	500	100
21	01	200	0	100
22	00	500		
23	21			

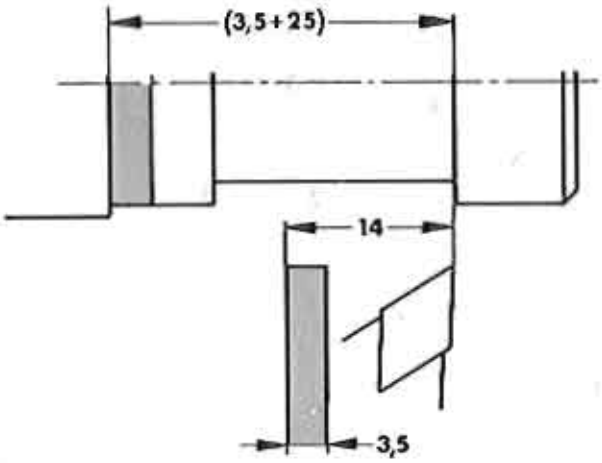

3. Parting-off tool (blocks N24 to N29)

The position of the parting-off tool's edge is the same as that of the right hand side tool. The distance between left hand side tool to the parting-off tool: Q = - 14,00 mm

24	00	0	-1450	
25	00	-500		
26	01	-1000	0	30
27	00	1600		
28	00	0	4350	
29	22			

Attention:
Never change tools when main spindle is running! Danger!

Presetting of tools (Inch gange)

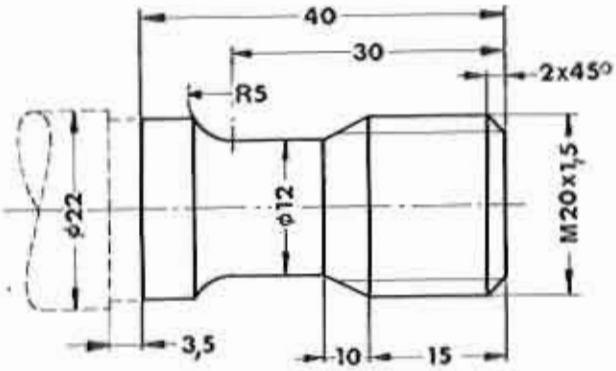

For the manufacture of most workpieces a few tools are necessary. E.g. right hand side tool, threading tool, parting-off tool.

When setting up the program you have to know the positions of the various tools to each other in X- and Z-direction.

1. Right hand side tool

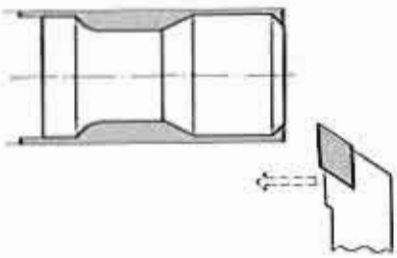

2. Threading tool

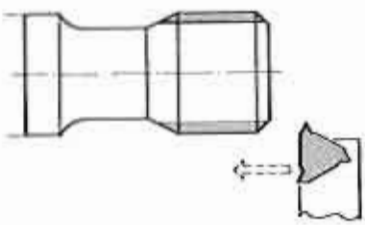

3. Parting-off tool

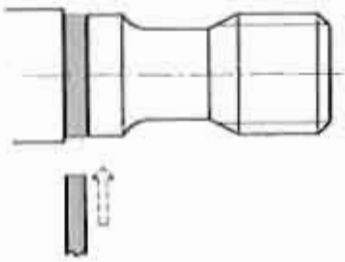

Procedure

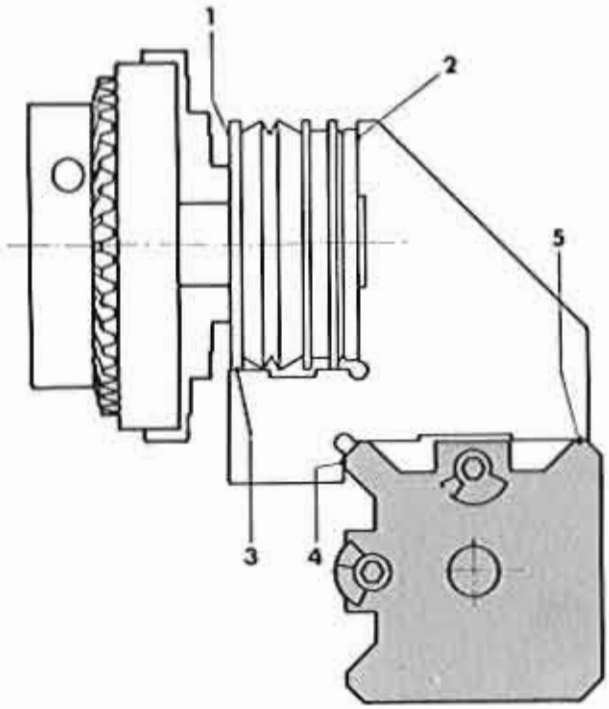

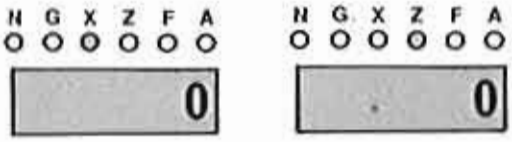

Note: The inch gauge has a turned ring at the face side of the gauge.

1. Position all tool bits in the toolholder at center height.

2. Mount setting gauge in 3-jaw chuck. Pay attention that the plane surface of the setting gauge (1) touches the jaws of the chuck.

3. Position of toolholder body:
   - Loosen clamping screw of toolholder body.
   - Put template horizontally onto setting gauge, points 2 and 3 must touch setting gauge.
   - Move longitudinal and cross slide by hand until toolholder body is near points 4 and 5.
   - Press toolholder body by hand against the template and clamp it.

4. Set X- and Z-value on digital readout at zero.

Positioning of turning tools (inch)

1. Right hand side tool T01

X = 0"
Z = 0"

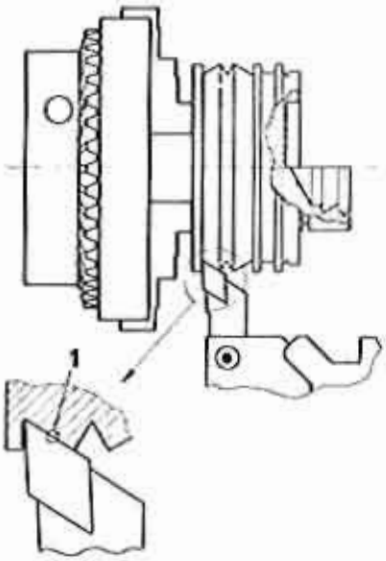

1. Right hand side tool T01

- Loosen clamping screws for turning tool and move it backwards in toolholder.
- Clamp toolholder onto toolholder body.
- Move right hand side tool into groove and position it such that the carbide tip aligns with surface 1.
- Clamp right hand side tool in this position and remove toolholder.

Attention:

Press tool only slightly and then position.

In the same way as the right hand side tool all other tools are to be preset.

When setting the right hand, left hand or neutral side tool, the position of the toolholder body remains the same. For all other tools the position of the slides must be changed.

Starting point for the measures is the position which you fixed with the template.

2. Traverse of left hand side tool (T02)

X = 0"
Z = 0"

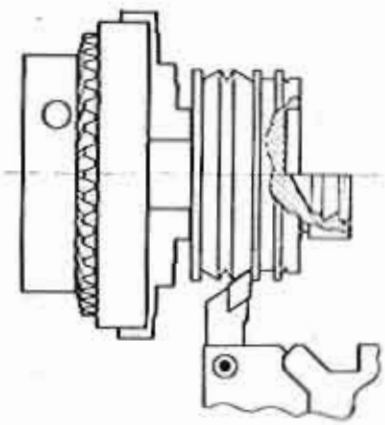

3 Traverse of neutral side tool (T03)

X = 0"
Z = 0"

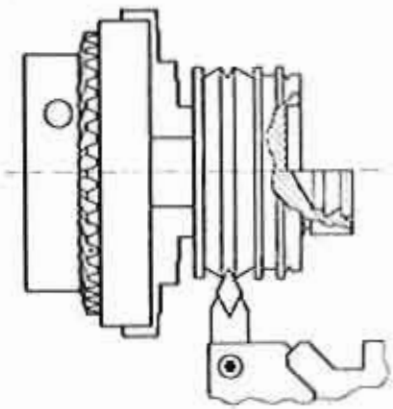

4. Traverse of threading tool for external threads (T04)

X = 0"
Z = .850"

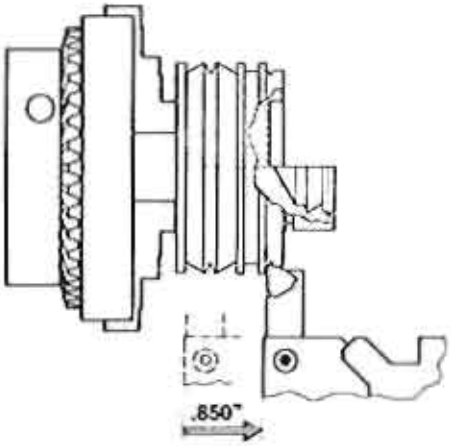

5. Traverse of plunge cutting tool (T05)

X = 0"
Z = +1.100"

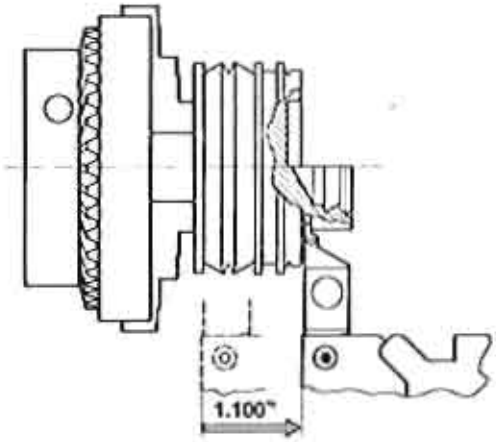

6. Traverse of parting-off tool (T06)

X = 0"
Z = +.650"

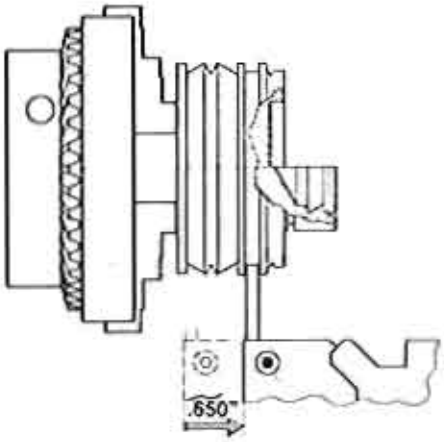

7. Traverse of internal threading tool (T07)

X = -.900"
Z = +2.340"

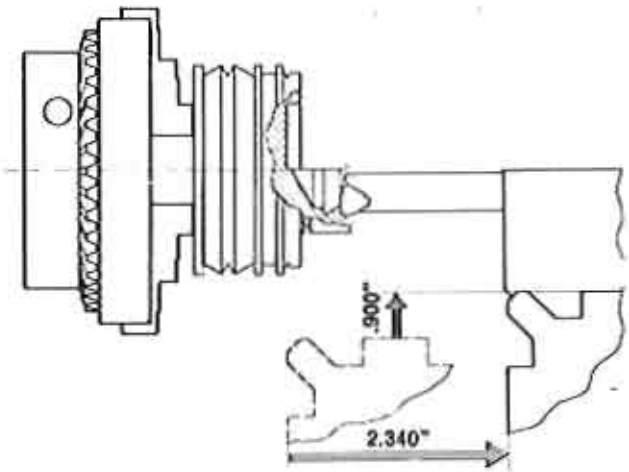

8. Traverse of inside turning tool (T08)

X = -.900"
Z = +2.100"

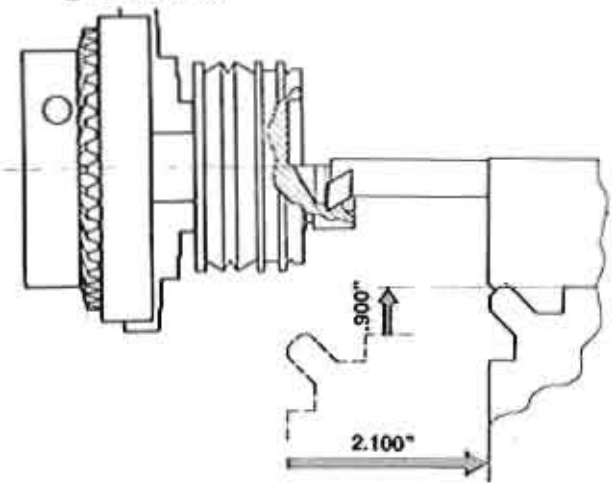

Positioning of cutting edges of tools to each other, if slide position remains unchanged

The values must be considered when programming. Reference point is the position of the right hand side tool.

Neutral Side Tool
L = 0"
Q = + .275"

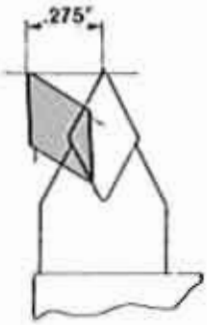

Left Hand Side Tool
L = 0"
Q = + .55"

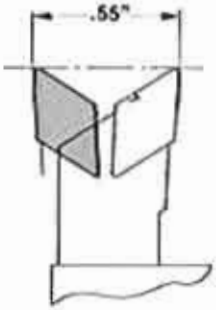

Parting-off Tool
L = 0"
Q = 0"

Outside Threading Tool
L = 0"
Q = + .100"

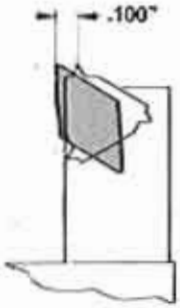

Pluning Cutting Tool
L = −.400"
Q = 0"

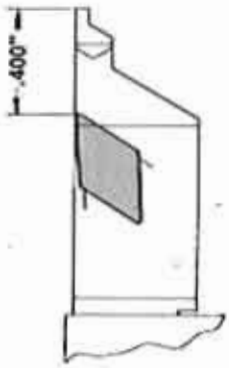

Inside Threading Tool
L = + .400"
Q = − .800"

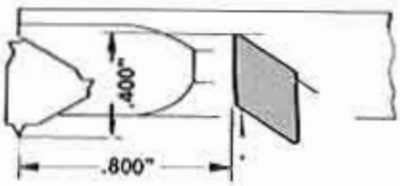

Inside Turning Tool
L = + .400"
Q = − .800"

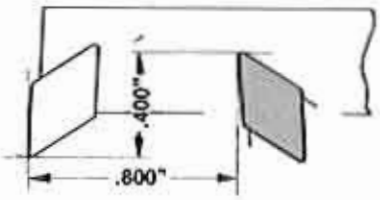

Example

Turning of an annular tee-slot and parting-off

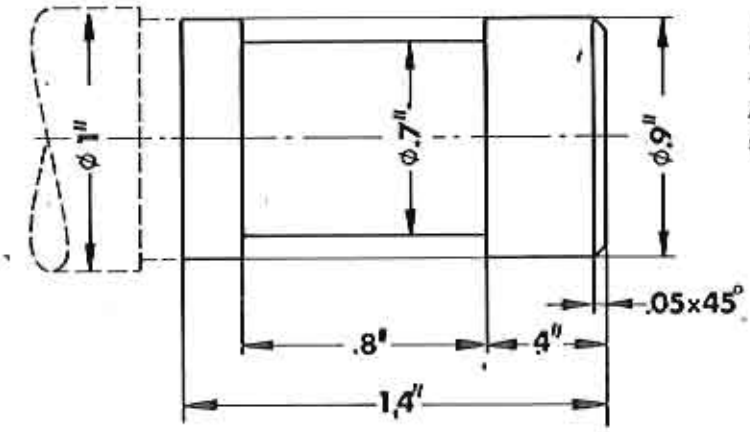

1. Right hand side tool (blocks N00 to N13):

At the end of block N13 the right hand side tool is at the indicated position.

N	G	X	Z	F
⋮				
10	01	-100	-200	25
11	01	0	-600	25
12	01	100	0	25
13	00	250		
14	21			

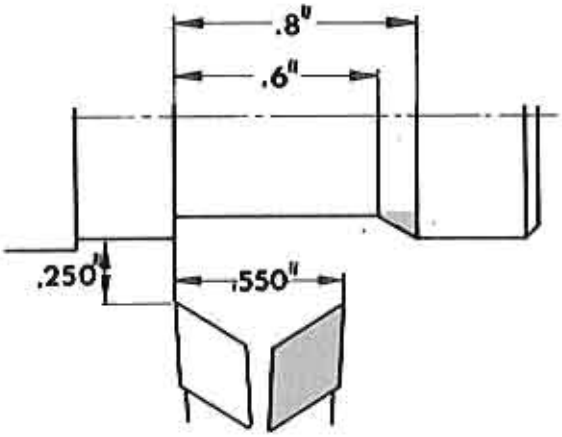

2. Left hand side tool

Traverse of position Q = +.550". This measure must be taken into account when you program the following blocks.

15	00	-300		
16	01	0	250	25
17	01	50	0	25
18	00	0	-250	
19	00	-100		
20	01	0	250	25
21	01	100		25
22	00	250		
23	21			

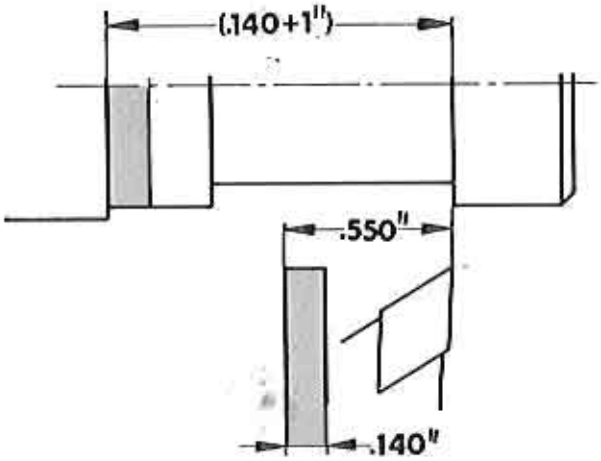

3. Parting-off toll(blocks N24 to N29)

The position of the parting-off tool's edge is the same as that of the right hand side tool. The distance between left hand side tool to the parting-off tool: Q = -.550"

24	00	0	-590	
25	00	-200		
26	01	0	-500	10
27	00	750		
28	00	0	1790	
29	22			

Attention:
Never change tools when main spindle is running! Danger!

Radius Compensation

(The Equidistant)

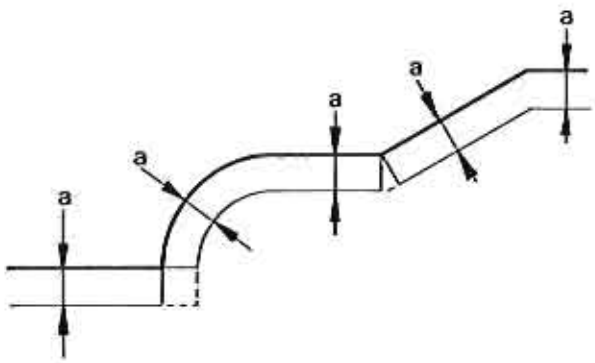

Definition:

The equidistant is a line which has the same distance to a given line (curve).

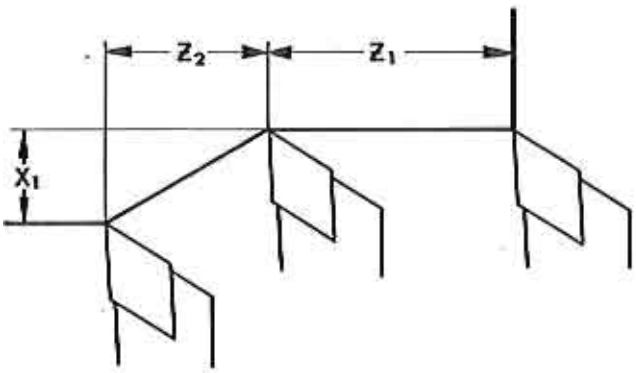

Programming up to now

With all our programming exercises up to now we assumed that the tool bit is absolutely pointed. We have programmed the workpiece shown left hand like follows:

N	G	X	Z	F
..	01	0	$-Z_1$	...
..	01	X_1	$-Z_2$	...

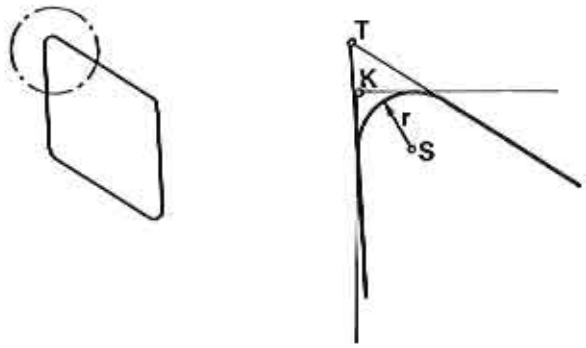

The radius of curvature of a corner

In fact, each carbide tip has a certain corner radius (r). Without the corner radius the carbide tip would break or melt when working.
The radii are standardized according to ISO: r = o,4/o,8/1,2/1,6/2,o/2,4 mm

S = Center of radius
r = Corner radius
K = Imaginary cutting point
(Location of reference point)
T = Theoretical point

The influence of the corner Radius

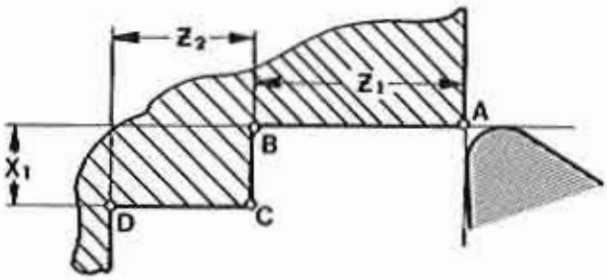

1. Turning at right angle

Follow the outline A B C D

The radius of the cutting edge does not influence the workpiece outline when turning in X- or Z-direction only (turning at the right angle).

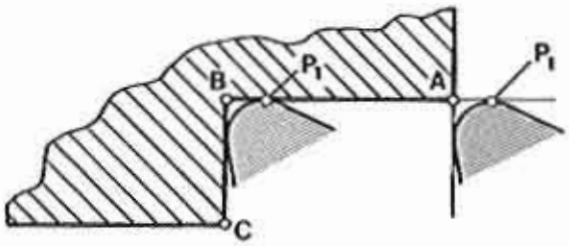

1. Distance $\overline{AB}$ (length Z1)

N	G	X	Z	F
..	01	0	$-Z_1$	

Determining the outline is point P1.

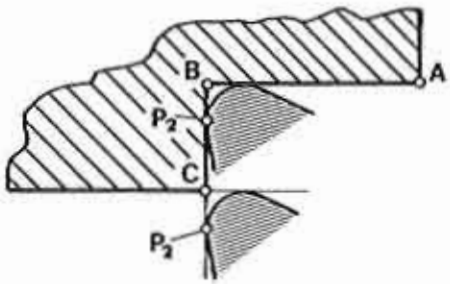

2. Distance $\overline{BC}$ (length X1)

N	G	X	Z	F
..	01	X_1		

Determining the outline is point P2.

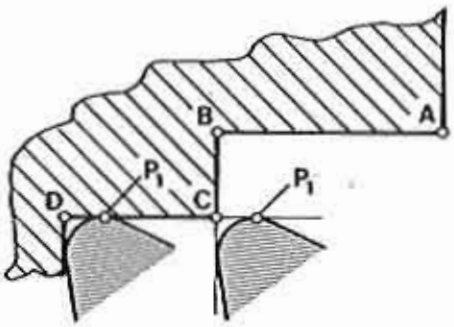

3. Distance $\overline{CD}$ (length Z2)

N	G	X	Z	F
..	01	0	$-Z_2$	

Determining the outline is point P1.

Conclusion:

The radius of the cutting edge does not influence the workpiece outline when turning in X- or Z-direction (turning at right angle).

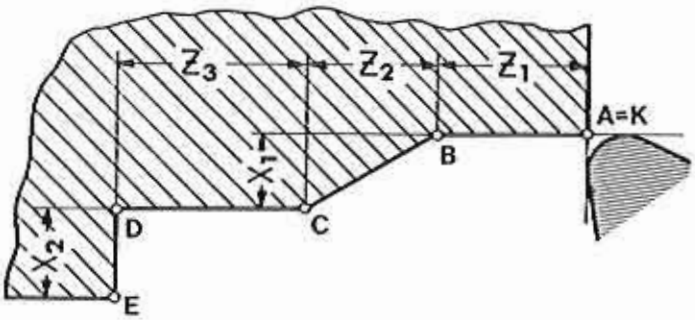

2. Taper turning

The workpiece outline A B C D E shall be programmed.

Up to now we habe been programming such an outline as follows:

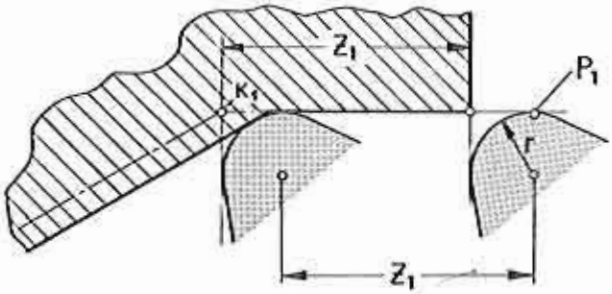

2.1. Distance $\overline{AB}$

N	G	X	Z	F
..	01	0	$-Z_1$	

Determining for the outline is point P1 of the carbide tip.

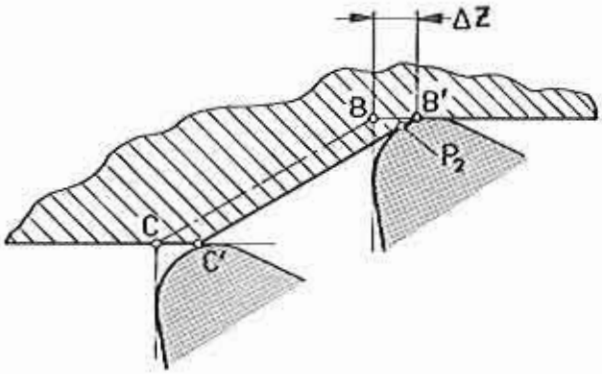

2.2. Distance $\overline{BC}$

N	G	X	Z	F
..	01	$+X_1$	$-Z_2$	

Here we see that it is not the imaginary point of the cutting edge K but the point P2 which determines the outline.
In other words, with this program the outline B'C' will be turned off.

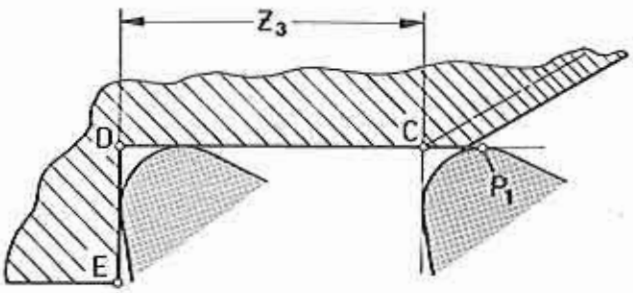

2.3. Distance $\overline{CD}$

N	G	X	Z	F
..	01	0	$-Z_3$	

Determining for the outline is point P1.

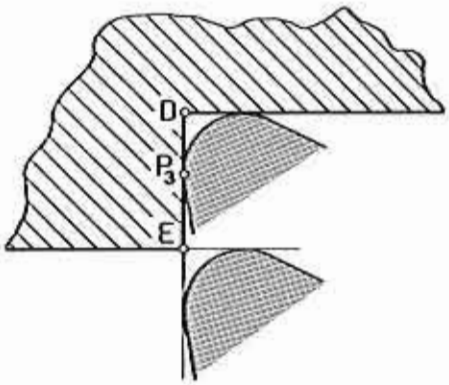

2.4. Distance $\overline{DE}$

N	G	X	Z	F
..	01	X_3		

Determining for the outline is P_3.

Result:

Because of the corner radius "r" of the tool bit the determiting cutting point p alters.

As you realize, not ABCDE is machined. It is AB'C'DE.

So:
Z_1 is to short (size = Δz)

Z_3 is to long (size $+\Delta z$).

Consequence:

With taper turning X and Z-dimensions must be calculated.

The two possibilities

Programming the Point in imaginary cutting Point K

Programming the center of the radius S

Example 1

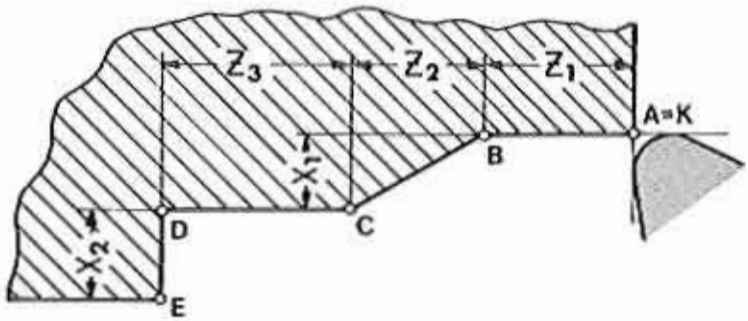

Calculating the point K

Calculating the point S

1. Distance AB

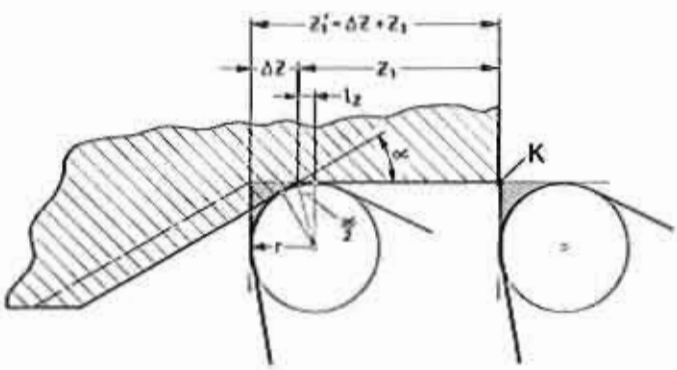

Path of point K:Z'

$$\boxed{Z_1' = Z_1 + \Delta Z}$$

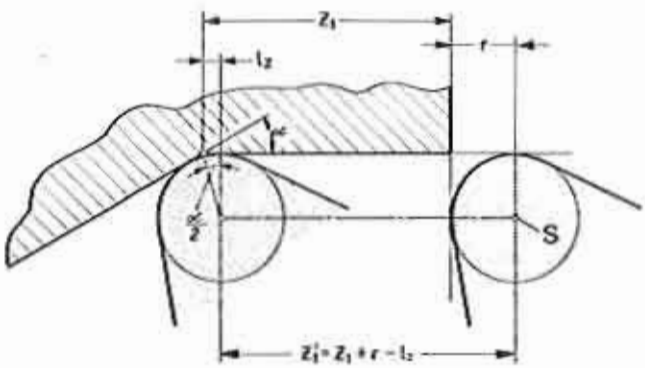

Path of point S:Z'

$$Z_1' = Z_1 + \underbrace{r - l_Z}_{\Delta Z}$$

$$\boxed{Z_1' = Z_1 + \Delta Z}$$

Calculation of L_Z and ΔZ

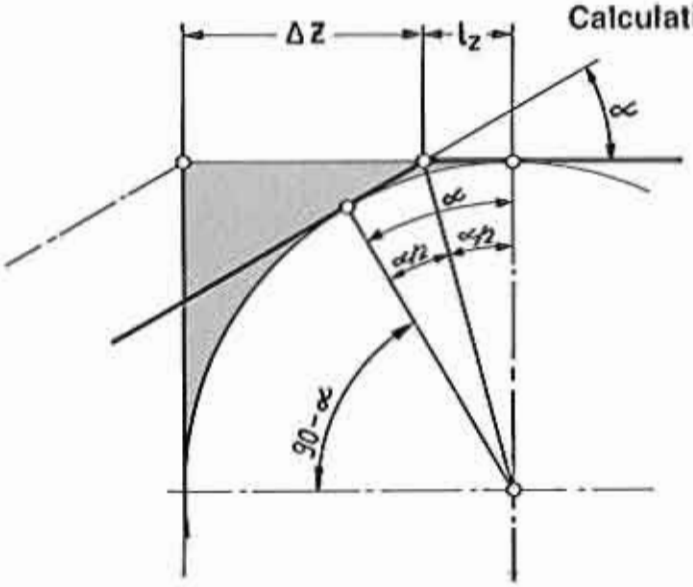

$$tg\frac{\alpha}{2} = \frac{l_Z}{r}$$

$$\boxed{l_Z = r.tg\frac{\alpha}{2}}$$

$$\Delta Z = r - l_Z = r - r\,tg\frac{\alpha}{2}$$

$$\boxed{\Delta Z = r\left(1 - tg\frac{\alpha}{2}\right)}$$

2. Distance BC

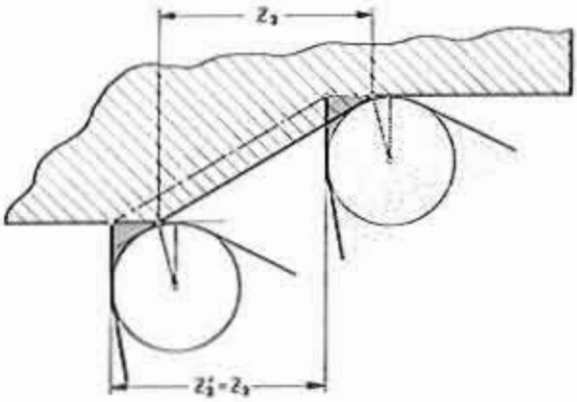

$$\boxed{Z_2' = Z_2}$$

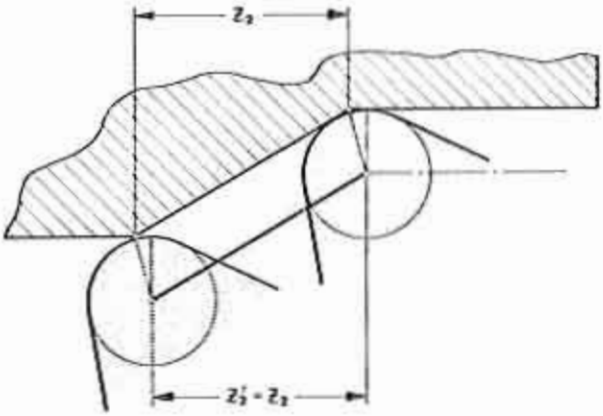

$$\boxed{Z_2' = Z_2}$$

3. Distance CD

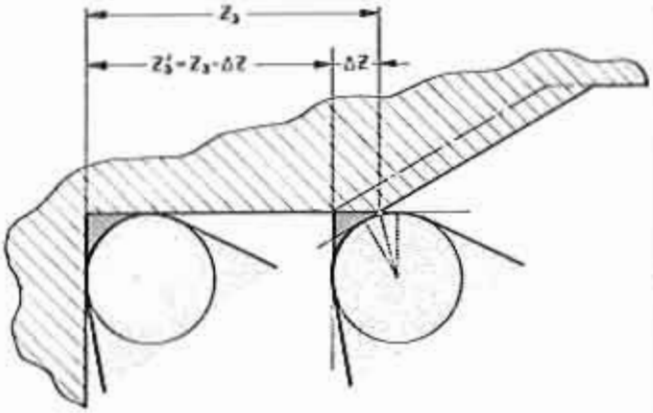

$$\boxed{Z_3' = Z_3 - \Delta Z}$$

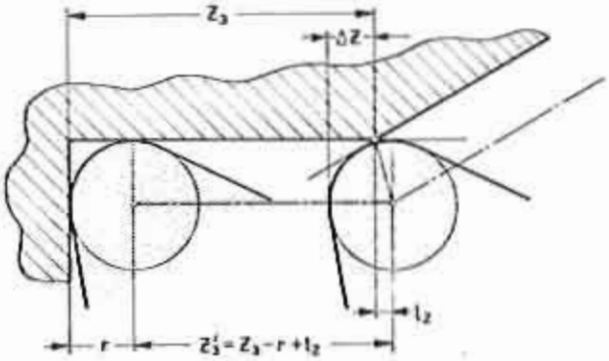

$$Z_3' = Z_3 - r + l_z$$

$$= Z_3 - (\underbrace{r - l_z}_{\Delta Z})$$

$$\boxed{Z_3' = Z_3 - \Delta Z}$$

Example 2

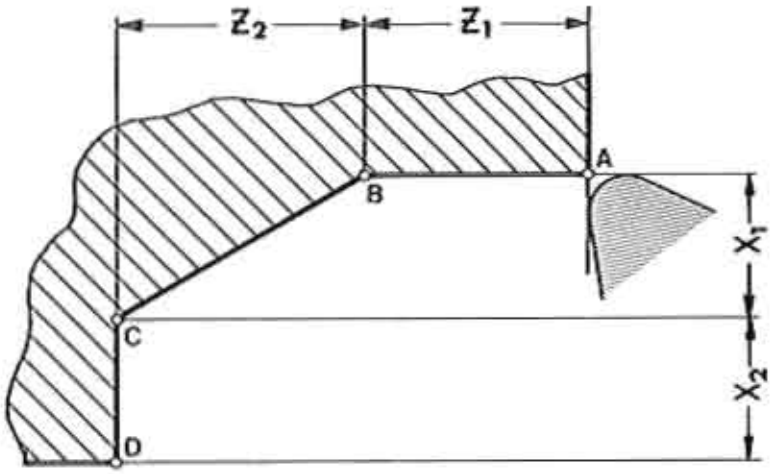

Distance AB

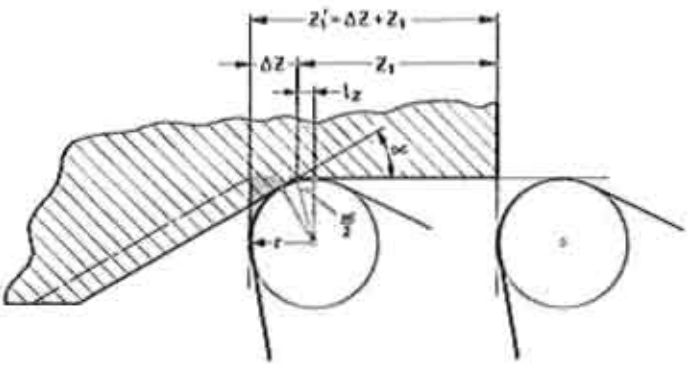

$$\boxed{Z_1' = Z_1 + \Delta Z}$$

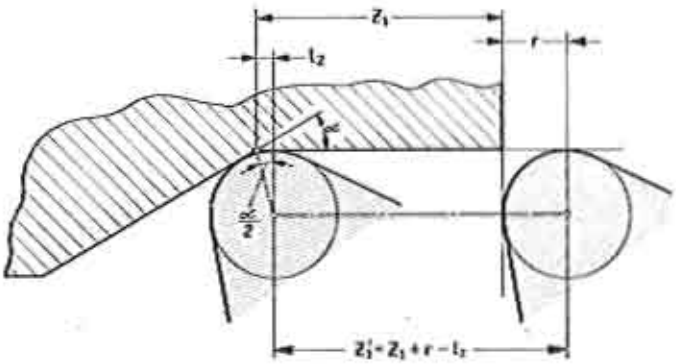

$$Z_1' = Z_1 + \underbrace{r - l_z}_{\Delta Z}$$

$$\boxed{Z_1' = Z_1 + \Delta Z}$$

Distance BC

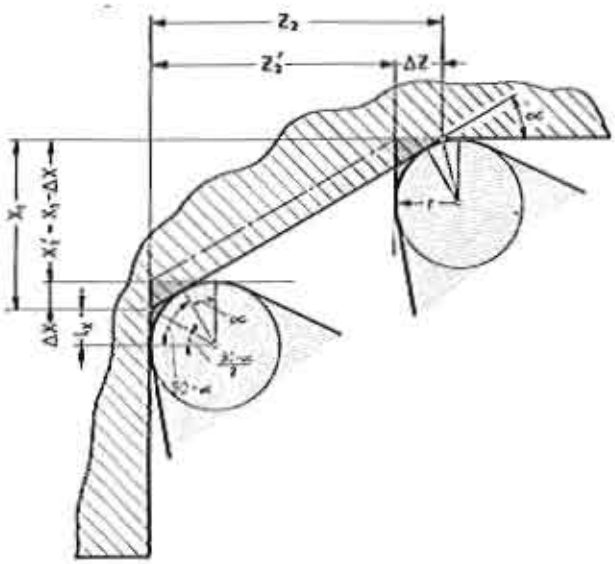

Path of K in Z-Direction

$$\boxed{Z_2' = Z_2 - \Delta Z}$$

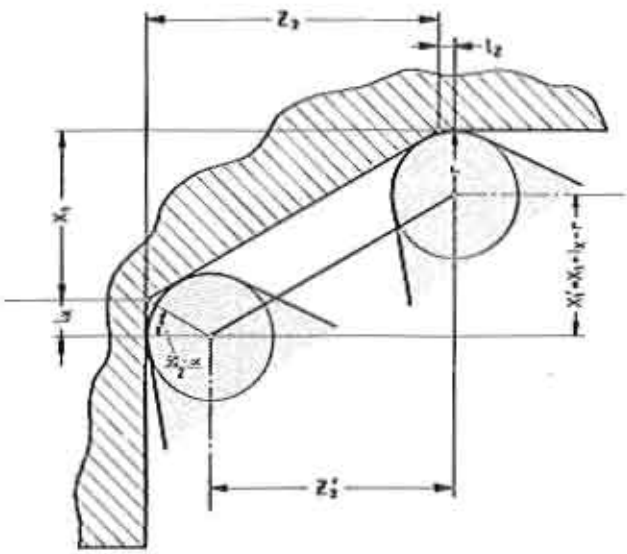

Path of S in Z-Direction

$$Z_2' = Z_2 - r + l_z$$
$$= Z_2 - \underbrace{(r - l_z)}_{\Delta Z}$$

$$\boxed{Z_2' = Z_2 - \Delta Z}$$

Path of K in X-Direction

$$\boxed{X_1' = X_1 - \Delta X}$$

Path of S in X-Direction

$$X_1' = X_1 - r + l_x$$
$$= X_1 - \underbrace{(r - l_x)}_{\Delta X}$$

$$\boxed{X_1' = X_1 - \Delta X}$$

Calculating Lx and Δx

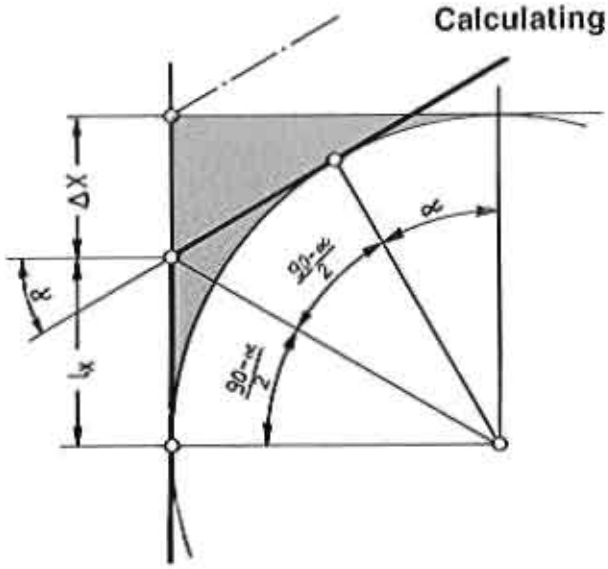

$$tg\,\frac{90-\alpha}{2} = \frac{l_x}{r}$$

$$\boxed{l_x = r \cdot tg\,\frac{90-\alpha}{2}}$$

$$\Delta X = r - l_x$$
$$= r - r \cdot tg\,\frac{90-\alpha}{2}$$

$$\boxed{\Delta X = r\left(1 - tg\,\frac{90-\alpha}{2}\right)}$$

Distance CD

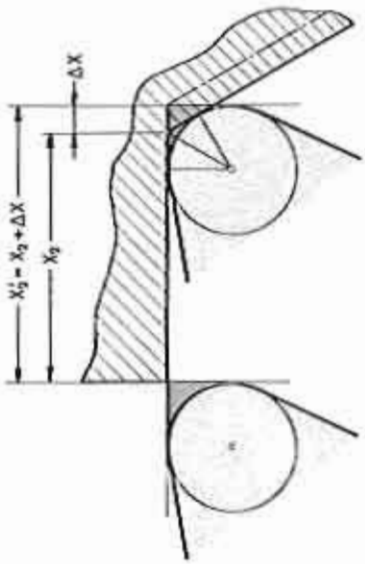

Path of K in X-Direction

$$\boxed{X_2' = X_2 + \Delta X}$$

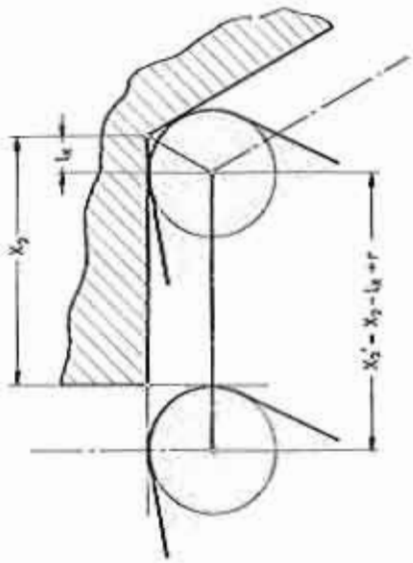

Path of S in X-Direction

$$X_2' = X_2 + \underbrace{r - l_x}_{\Delta X}$$

$$\boxed{X_2' = X_2 + \Delta X}$$

Conclusion:

- The size of Δx and Δz resp. lx and lz depends on the size of the
  - corner radius and from the
  - angle α.
- With industrial machines the values Δx an Δz are calculated by the computer.

Chart for Δ X and Δ Z-values

		o,4	o,5	o,8	1,o
5°	Δ X	o,o3	o,o4	o,o7	o,o8
	Δ Z	o,38	o,48	o,76	o,96
1o°	Δ X	o,o6	o,o8	o,13	o,16
	Δ Z	o,36	o,46	o,73	o,91
15°	Δ X	o,o9	o,12	o,19	o,23
	Δ Z	o,35	o,43	o,69	o,87
2o°	Δ X	o,12	o,15	o,24	o,3o
	Δ Z	o,33	o,41	o,66	o,82
3o°	Δ X	o,17	o,21	o,34	o,42
	Δ Z	o,29	o,37	o,59	o,73
4o°	Δ X	o,21	o,27	o,43	o,53
	Δ Z	o,25	o,32	o,51	o,64
45°	Δ X	o,23	o,29	o,47	o,59
	Δ Z	o,23	o,29	o,47	o,59
5o°	Δ X	o,25	o,32	o,51	o,64
	Δ Z	o,21	o,27	o,43	o,53
6o°	Δ X	o,29	o,37	o,59	o,73
	Δ Z	o,17	o,21	o,34	o,42
7o°	Δ X	o,33	o,41	o,66	o,82
	Δ Z	o,12	o,15	o,24	o,3o
75°	Δ X	o,35	o,43	o,69	o,87
	Δ Z	o,o9	o,12	o,19	o,23
8o°	Δ X	o,36	o,46	o,73	o,91
	Δ Z	o,o6	o,o8	o,13	o,16

9. Glance Into Production Machinery

Glance into production machinery	9.1
The address letters	9.2 - 9.4
Programming of decimal point, zero suppression	9.5
Format specification	9.6
Programming of absolute value/ Programming of reference value	9.7 - 9.8
Control circuits	9.9 - 9.10
Fixed points	9.11 - 9.14
Programming sheet of an industrial machine	9.15 - 9.27

Glance into Production Machinery

With a training unit the emphasis is on getting to know the set up and the logic behind a CNC-machine. High output or productivity are not of concern.

With production machines in industry high output and precision in manufacture are top priorities. Manual operations such as setting of spindle speeds, tool change, switching-on of coolant attachment, etc. are time consuming and therefore these operations are usually done via the control unit, i.e. through the program.

Automation

Since production time (workpiece time) has to be kept as short as possible,

- switching on the main spindle,
- setting of spindle speed,
- tool change,
- various switching functions (e.g. coolant on, coolant off)

are automised and programmed.

Programming

When developing a CNC unit, it is always the goal to develop it for simple and praxis-oriented programming.

Therefore the computer takes over more and more calculation and storage work. Various data (e.g. tool data, technological data) are stored and do not have to be programmed or entered any more.

On the following pages a summary.

The character store (the address letters)

Since there are more possibilities for programming with industrial/production machines, therefore the character store has to be larger.

Just consider a milling machine: we have to program in 3 axes: X,Y,Z.

The meaning of the characters is defined according to DIN 66 o25, page 1.

The current addresses, their meaning, their characteristics.

Extract from DIN 66o25, page 1, edition 2.72

Character	Meaning
A	Turning movement - X-axis
B	Turning movement - Y-axis
C	Turning movement - Z-axis
D	Turning movement additional axis or third feed
E	Turning movement further axis or second feed
F	Feed
G	Preparatory function
H	(unassigned)
I	Interpolation parameter or thread pitch parallel to X-axis
J	Interpolation parameter or thread pitch parallel to Y-axis
K	Interpolation parameter or thread pitch parallel to Z-axis
L	(unassigned)
M	Auxiliary function
N	Block number
O	(not to be used)

Character	Meaning
P	Third movement parallel to X-axis or parameter for tool correction
Q	Third movement parallel to Y-axis or parameter for tool correction
R	Third movement parallel to Z-axis or rapid traverse direction Z-axis or parameter for tool correction
S	Spindle speed
T	Tool
U	Second movement parallel to X-axis
V	Second movement parallel to Y-axis
W	Second movement parallel to Z-axis
X	Movement in direction of X-axis
Y	Movement in direction of Y-axis
Z	Movement in direction of Z-axis

The preparatory functions (Format G2)

G-functions, preparatory functions - these are the most common terms used.

The available number of preparatory functions are more numerous with industrial machines. The meaning of such functions is defined according to DIN 66 o25, parts of it are unassigned.

These unassigned ones can be used by the manufacturer of a control unit for certain control functions.

The meaning of such specially assigned functions is explained in the instruction books of the relative machine.

Codes of preparatory functions G

Extract from DIN 66o25, page 2, paragraph 2.4, edition 72.5.

Preparatory Function	Meaning
G00	Point to Point, Positioning
G01	Linear Interpolation
G02	Circular Interpolation Arc clockwise
G03	Circular Interpolation Arc counterclockwise
G04	Dwell
G06	Parabolic Interpolation
G08	Acceleration
G09	Deceleration
G17	XY Plane Selection
G18	XZ Plane Selection
G19	YZ Plane Selection
G25 - G29	Permanently unassigned
G33	Thread Cutting, constant lead
G34	Thread Cutting, increasing lead
G35	Thread Cutting, decreasing lead
G36 - G39	Permanently unassigned

Preparatory Function	Meaning
G40	Tool Offset Cancel
G41 - G52	Tool Offset
G53	Linear Shift Cancel
G54 - G59	Linear Shift
G60	Positioning Exact 1 (fine)
G61	Positioning Exact 2 (med)
G62	Positioning Fast (coarse)
G63	Tapping
G80	Fixed Cycle Cancel
G81 - G89	Fixed Cycle
G90	Absolute Dimension
G91	Incremental Dimension
G92	Preload Registers
G93	Inverse Time, Feed Rate
G94	Feed per Minute
G95	Feed per Spindle Revolution
G96	Constant Surface Speed
G97	Revolution per Minute

All preparatory functions not mentioned here are unassigned.

The miscellaneous functions

Address: M; Format: M2

The switching on of the spindle, of the coolant liquid, tool change and other functions are programmed with address M. Also with functions M there are preliminary and permanently unassigned ones.

Codes of miscellaneous functions M

Extract of DIN 66025, page 2, paragraph 4.3, edition 72/5.

Miscellaneous Function	Meaning
M00	Program Stop
M01	Optional (planned) Stop
M02	End of Program
M03	Spindle Clockwise
M04	Spindle Counterclockwise
M05	Spindle Off
M06	Tool Change
M07	Coolant No. 1 ON
M08	Coolant No. 2 ON
M09	Coolant OFF
M10	Clamp
M11	Unclamp
M13	Spindle Clockwise and Coolant ON
M14	Spindle Counterclockwise and Coolant ON

Miscellaneous Function	Meaning
M15	Motion +
M16	Motion -
M19	Oriented Spindle Stop
M30	End of Tape
M31	Interlock Bypass
M36 - M37	Feed Ranges
M38 - M39	Spindle Speed Range
M40 - M45	Gear Changes
M50	Coolant No. 3 ON
M51	Coolant No. 4 ON
M55 - M56	Linear Tool Shift
M60	Workpiece Change
M61 - M62	Linear Workpiece Shift
M71 - M72	Angular Workpiece Shift

All miscellaneous functions not mentioned here are preliminary or permanently unassigned.

Some Facts and Features

Programming of decimal point

Nearly all industrial NC-machines are equipped with decimal point input. This feature facilitates programming and program input.

Example:

1/100 mm input (like COMPACT 5 CNC):

X-value is 24,25 mm
Input: 2425 (no decimal point)

Example:

Input of decimal point:

X-value is 24,25 mm
Input: 24,25 (programming of decimal point)

Zero suppression (according to ISO)

1. Suppression of leading zeros

The notation X0012,145 is vague and complicated. Thus with many NC units the leading zeros need not be written.

Example:

Notation without suppression of leading zeros	Notation with suppression of leading zeros
X00<u>12,145</u> Leading zeros	X12,145

2. Suppression of consecutive zeros (according to ISO)

The zeros after the decimal point need not be written.

Example:

Notation without suppression of consecutive zeros	Notation with suppression of consecutive zeros
X12,<u>000</u> Consecutive zeros	X12.

Format specification

COMPACT 5 CNC

In our format specification on the COMPACT 5 CNC we have indicated the format symbolically.

N../G../X..../Z.....

Program format specification (according to ISO)

A typical example:

N4/G2/X43/Z43/ ..... etc.

What means X43?

X 43

The first figure means the number of possible digits before the decimal point

The second figure means the number of possible digits after the decimal point

X....

4

3

What means N4?

If there is only one figure after the address character, then it means the number of digits before the decimal point. The largest programmable block number will then be: N9999

N 4

Exercise: Indicate the program format of the COMPACT 5 CNC (according to ISO)

N../G../X..../Z...../F...

Programming of absolute value / Programming of reference value

Industrial NC-machines allow both absolute and incremental programming. The computer must be however informed on how to understand the data which are put in: absolute or incremental. This information is given via G-functions.

G90 = Absolute dimension input
G91 = Incremental dimension input

Example: Programming of absolute value

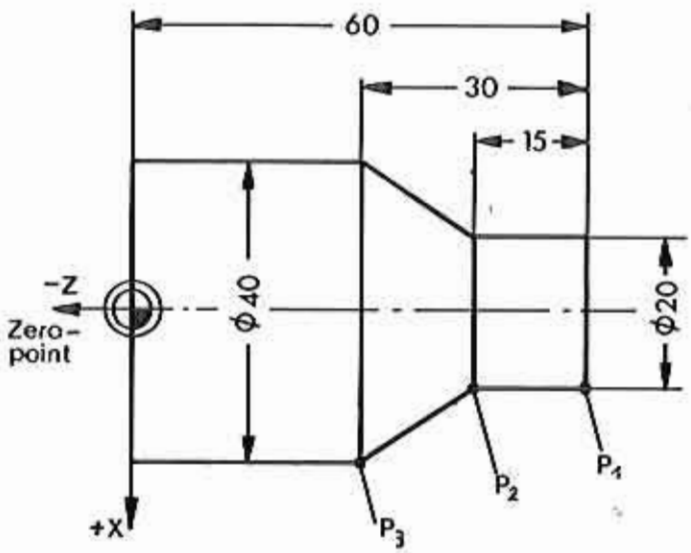

Points P_1 /P_2 /P_3 have to be described in the absolute system; zero point of the coordinate system as indicated.

	N	G	X	Z
	o0	G90		
P_1	o1	o1	1o	6o
P_2	o2	o1	1o	45
P_3	o3	o1	2o	o

By programming of G90 all following X/Z inputs will be calculated as absolute. This instruction will be cancelled, if you program G91.

Exercise:

Describe points P_1 /P_2 /P_3 in the absolute system. Zero point as indicated.

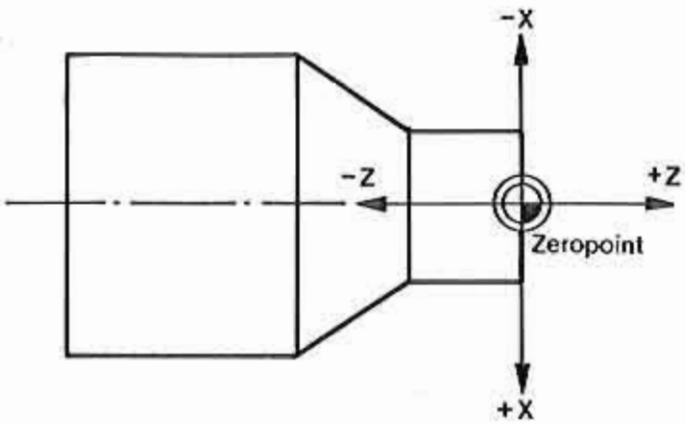

N	G	X	Z	F

Programming of diameter

Workpieces to be turned are mostly indicated in the technical drawing with their diameters. To convert the diameter values into radius values is time consuming and can bring about miscalculation. Therefore, with practically all lathes the diameter is programmed.

Whether the customer (who buys the machine) wants a programming facility for radius or for diameter has to be indicated when ordering the NC-machine.

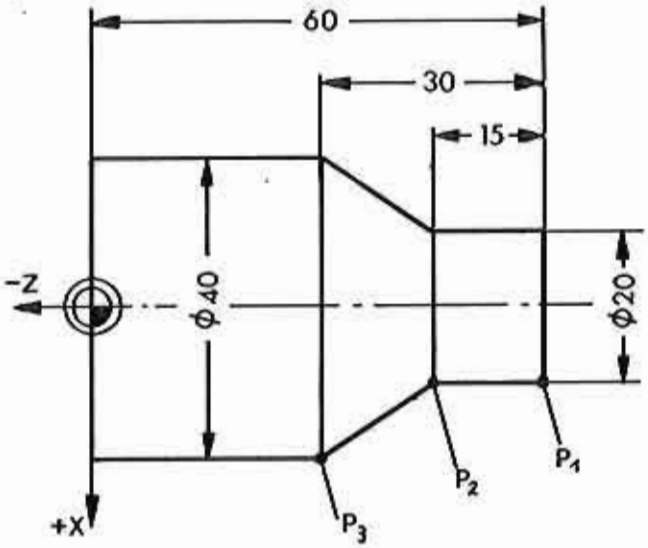

Example:

Zero point as indicated
Programming of absolute value
Programming of diameter

	N	G	X	Z
	..	90		
P_1	..		20	60
P_2	..		20	45
P_3	..		40	30

Example: Programming of diameter

Program point P_1 absolute, point P_2 incremental, point P_3 absolute.

N	G	X	Z	F

The Control Circuits on NC-Machines

1. Open control circuit (e. g. COMPACT 5 CNC)

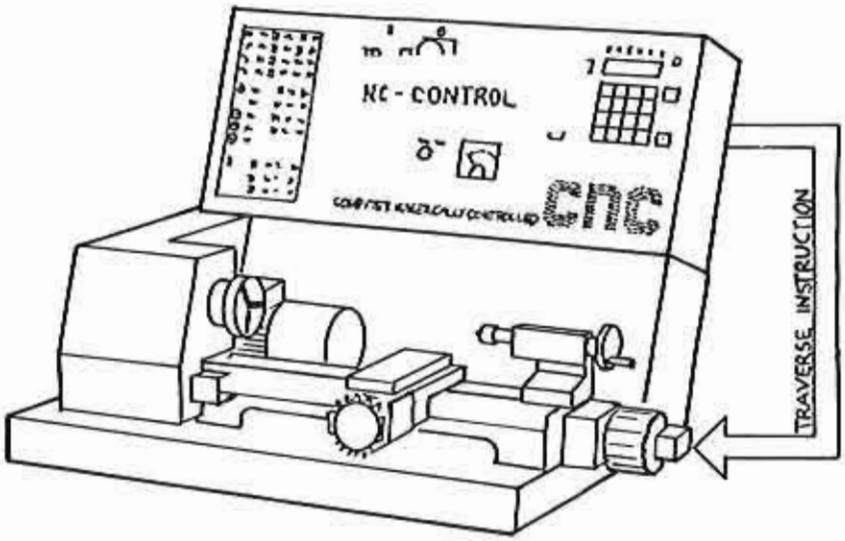

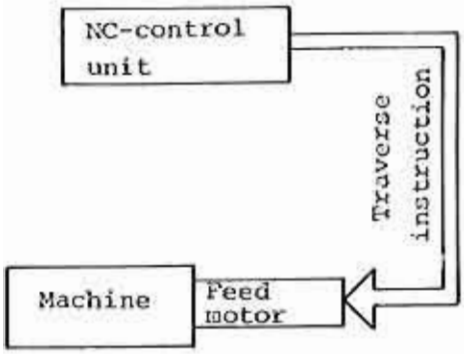

Control principle:

The NC-control unit gives the instruction to traverse to the feed motor, e.g. to traverse by 37,25 mm. An answer back signal, whether the slide has actually moved, is not given.

2. Closed control circuit

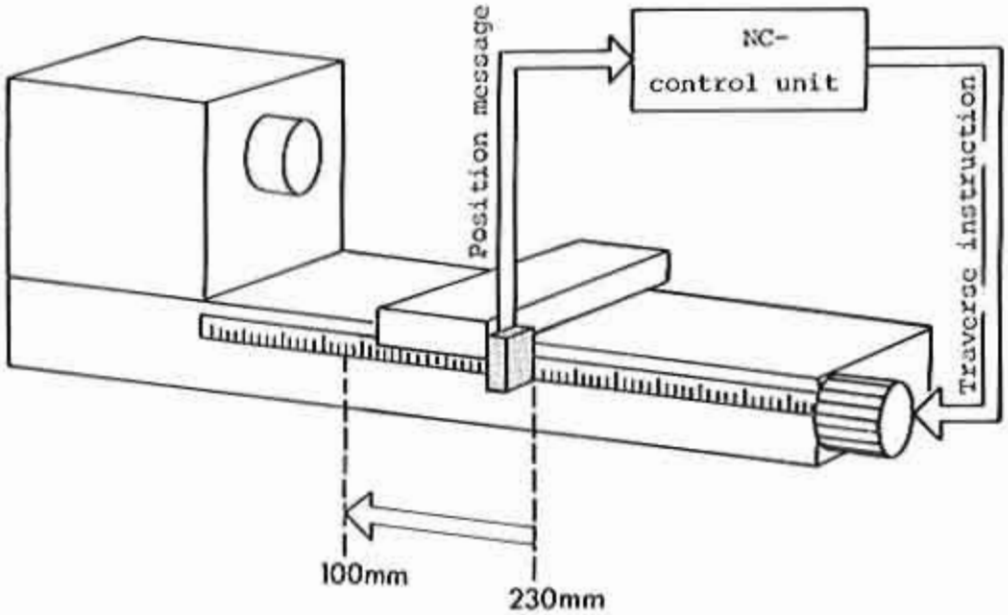

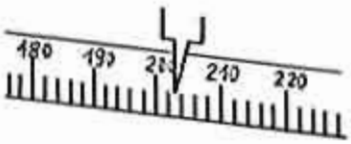

The machine is equipped with a position measure system. The positions of the slides are continuously indicated to the control unit.

Principle (example)

The slide is at position 23o mm. We give instruction to traverse Z -13o mm. The position measure system reports to the NC-control unit: my position is 23o mm.

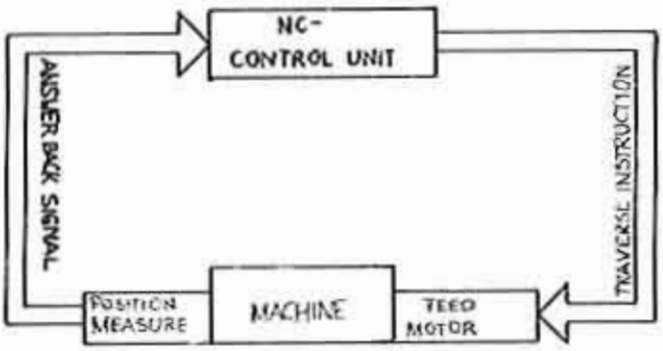

The calculator calculates:

Actual value = 23o mm
Desired value = (23o - 13o) = 1oo mm

Thus I have to give traverse instruction until I receive information from the position measure: I have reached at 1oo mm.

Important Points

1. The machine datum M

Symbol M

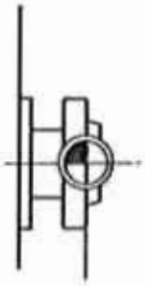

The machine datum is the origin of the coordinate system. With lathes it is on the mounting base of the main spindle flange and the turning axis. It cannot be changed by the user of the machine. It was fixed by the manufacturer and programmed into the computer memory. The point has the coordinates X=O, Z=O.

2. The machine reference point R

Symbol R

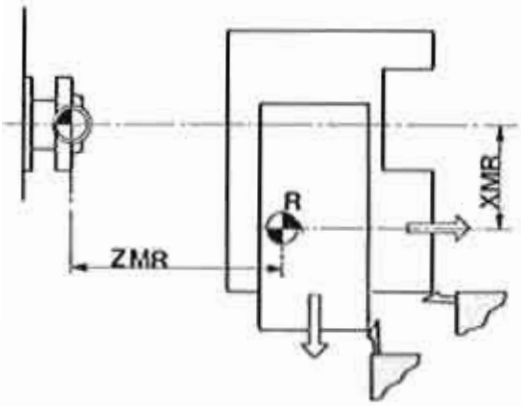

The machine reference point serves for the calibration of the measure system. The position of point R is determined from the manufacturer by cams. The measures XMR and ZMR are fixed in the computer and cannot be changed by the user.

Calibration procedure

a) The slides are moved until the cams indicate: "The slides are at reference point R". The displacement measuring system indicate the measured values X and Z.

b) The computer compares XMR and X resp. ZMR and Z.

$\left.\begin{matrix}XMR\\ZMR\end{matrix}\right\}$ = fix stored values

$\left.\begin{matrix}X\\Z\end{matrix}\right\}$ = measured values

c) If there is a deviation, then X- and Z-values in the measure system will be corrected.

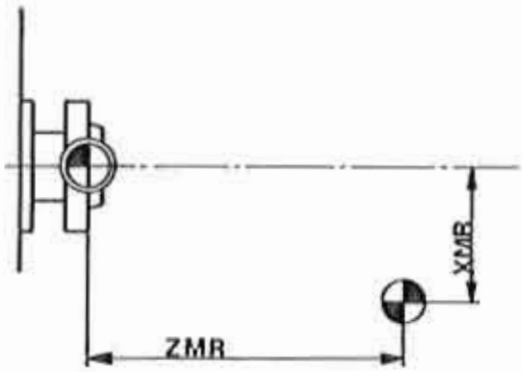

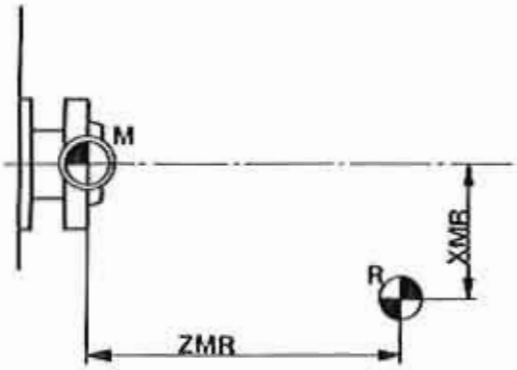

Example

Slides are in reference point position R. Programming the offset from R to machine reference point M as follows.

N	G	X	Z
..	G9o		
..	o1	XMR	ZMR

3. The workpiece zero-point W

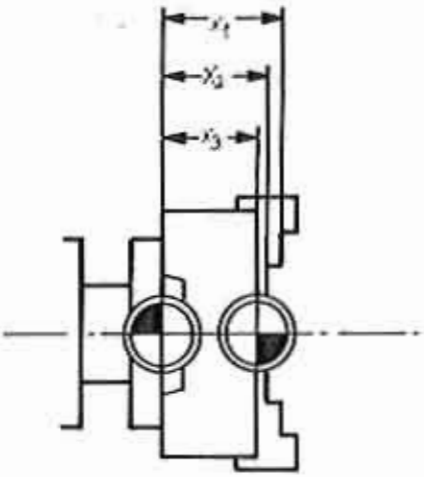

The various chucking devices are mounted onto the main spindle. The distance of the face side of the workpiece to the machine datum ($X_1/X_2/X_3$) differs, depending on the jaws which we use for chucking. That would cause a lot of calculation work when programming.

Therefore:

Offset of the origin of the coordinate system into the workpiece zero point W.

G92 Programmed offset of reference point

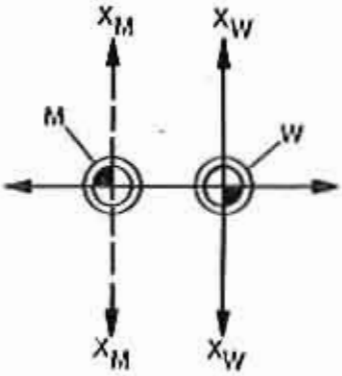

The origin of the coordinate system is the machine reference point. This origin of the coordinate system can be offset to the workpiece zero point W. It is effected via G-funktion G92.

The workpiece zero point is described from point R when the offset is programmed via G92

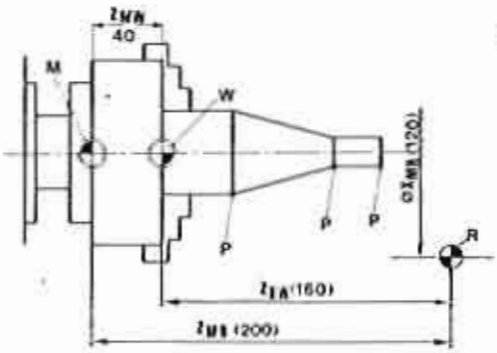

Coordinates of W

X-Axis: no offset Ø XMR= Ø XMW = 120mm

Z-Axis: ZRW = ZMR - ZMW = 200 - 40 = 160

Programming the offset

N	G	X	Z
..	90		
..	92	120	160

Example

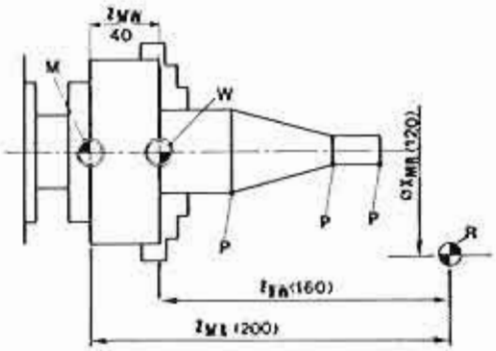

Programming the points P_1 /P_2 /P_3

Programming of absolute value
Programming of diameter

	N	G	X	Z
	..	9o		
	..	92	12o	16o
P_1	..	oo	1o	8o
P_2	..	o1	1o	6o
P_3	..	o1	3o	25

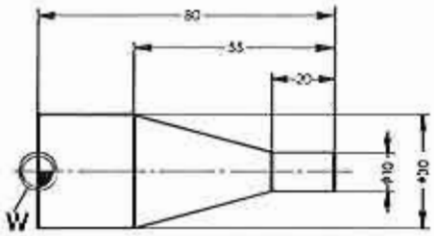

Exercise

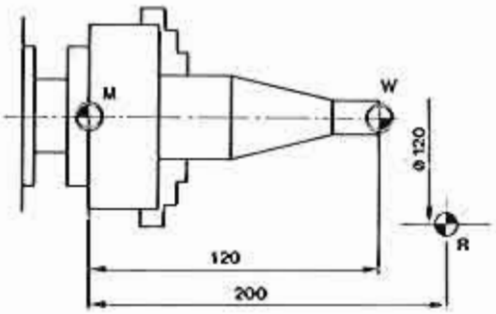

Program the offset of W (design) and program points P_1/P_2/P_3 .

N	G	X	Z	F

4. The dead stop point A (Symbol)

The distance of the point A alters depending on the clamping device.

Position of point A must be cosidered when programming the offset of the coordinate system.

5. The set value E (Symbol)

The set point E is the zero point for the tool pre-setting. Starting from this point, the measurements for the tool bit dimensions L and Q are set and calculated (compare address T).

6. Tool post reference point T (Symbol)

Point T is exactly the point of rotation of the tool post.

7. Slide reference point F (Symbol)

A point on the tool post.

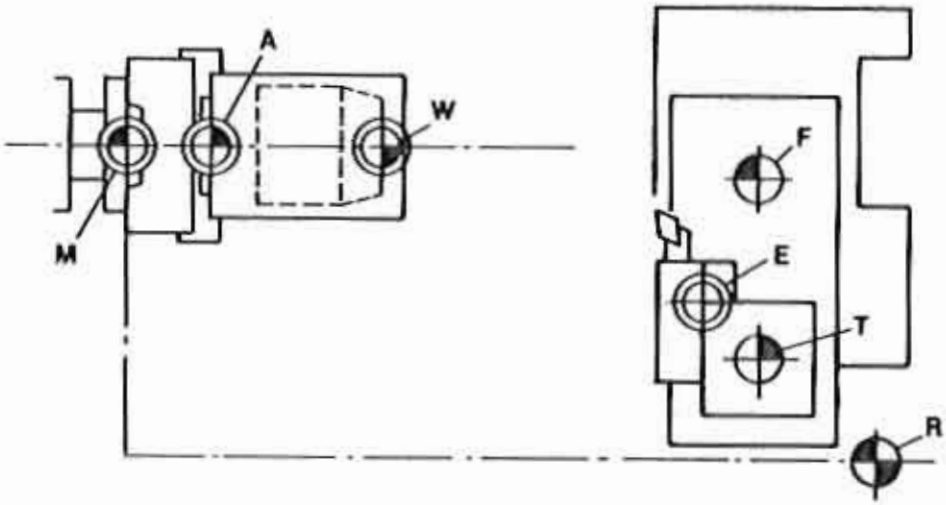

There are even more reference points on certain NC-machines (compare relative instruction book).

With many machines various points are for reasons of simplicity identical with reference point R.

R = E = T = F

A Programming Sheet of an Industrial Machine

Address N (Block Number)

(N)	G	X	Z	I	K	F	R	S	T	M

The number of blocks is 9999. (Address format N4). We program in decimal jumps so we can put in blocks also afterwards without having to rewrite the whole program.

Common format: N4 (to 9999 blocks)

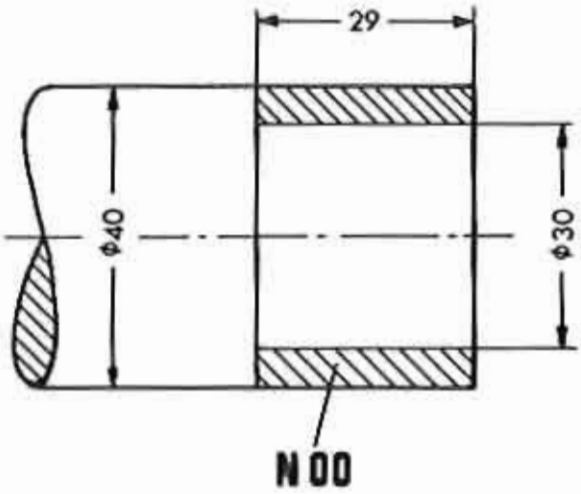

Example

The programmer has fixed a depth of cut of 5 mm. When the operation starts, the depth of cut turns out to be too large.

N	G	X/U	Z/W
00	84	3.000	30.000
01	84	2.000	30.000
10			
20			

Inserting a block

The operator changes the program by dividing block N00 in two single blocks (N00, N01) with 3 mm resp. 2 mm depth of cut.

N	G	X/U	Z/W
00	84	5.000	30.000
10			
20			
30			

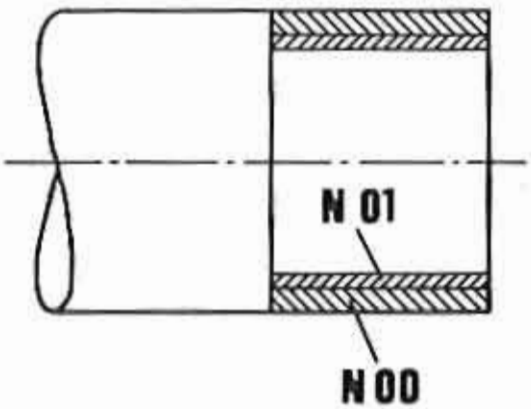

Which possibilities do you have for inserting a block on the COMPACT 5 CNC?

Which other possibilities would there be in this example - maybe without dividing the block?

In which way were the values X and Z given?

The Addresses G/X/Z/R/M

N	G	X	Z	I	K	F	R	S	T	M

Addresses G/X/Z: These you know already from working with the COMPACT 5 CNC.

Address M: Miscellaneous functions, codes to be found on page 9.4.

Programming example

Block 1: Spindle speed in clockwise direction 2400 rev/min.

Block 2: Coolant 1 ON

N	G		S	M
01	97		2400	03
02				07

Address R: The address R refers to the control unit. It is programmed in connection with the constant cutting speed.

Address S (Spindle Speed)

N	G	X	Z	I	K	F	R	S	T	M

With industrial NC-machines also the spindle speeds are programmed.

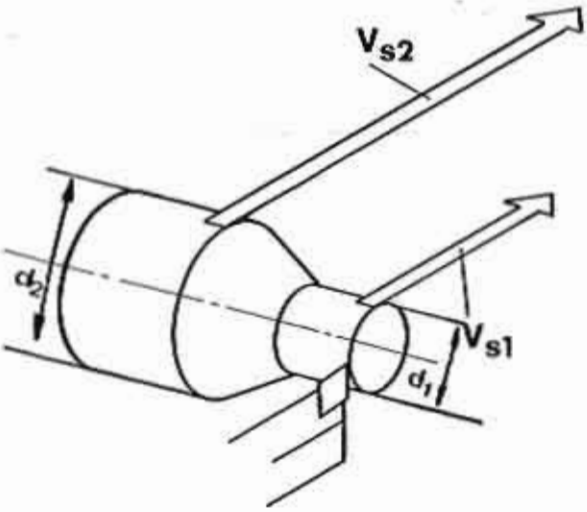

1. Constant spindle speed

Example:

Turning a taper
With constant spindle speed (e.g. 1000 rpm) also the cutting speed changes from

$$V_{s1} = \frac{d1 \times \pi \times S}{1000} = \frac{20 \times \pi \times 1000}{1000}$$

$$= 62 \text{ m/min.}$$

to

$$V_{s2} = \frac{d2 \times \pi \times S}{1000} \quad \frac{40 \times \pi \times 1000}{1000}$$

$$= 124 \text{ m/min}$$

The maximum cutting speed is given (depending on material of the tool bit, raw material of workpiece, depth of cut, etc.).

With constant spindle speed the maximum cutting speed has to be set at the largest diameter.

Disadvantage:

- When cutting speeds change also cutting condition (surface) will change.
- Many materials can be hardly worked with too low cutting speeds.

Addresses I/K

N	G	X	Z	I	K	F	R	S	T	M

There are common CNC-units where I/K are used for the description of the center point of circle. On industrial machines any type of arc can be achieved.

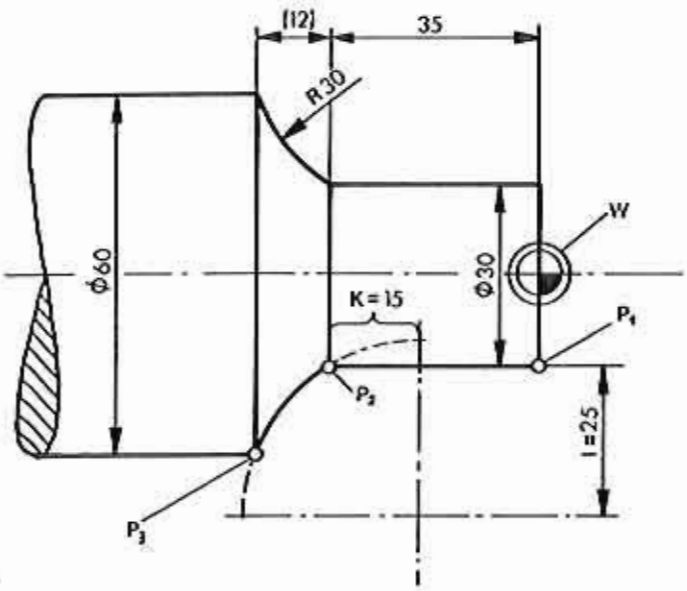

Programming

Tool bit is positioned in point 1.

N	G	X	Z	I	K
10	01	30	-35		
20	02	60	-47	25	15

Block 1o: Programming of P_1 to P_2 .

Block 2o: Turning of radius

Tool bit is at point P_2.

X,Z-values:
In columns X and Z we enter the coordinates of point P_3.
X60 (Programming of diameter)
Z-47 (Programming of absolute value)

I/K-values

I and K are the coordinates of the center point of radius. These values have to be put in incrementally. Starting point for the description of point P_2 - Starting point for the arc.

Addresses X/U, Z/W

N	G	X/U	Z/W	I	K	F	R	S	T	M

The measurements in most drawings are given in a mixed code, both absolute and incremental. With the preparatory functions G90 and G91 you can choose between these two codes. In many instances it will however be simpler to program in both codes in one block.

For this case the addresses U and W are used. If the values are entered under X,Z they will be calculated as absolute. If entered under U/W, the values will be incremental.

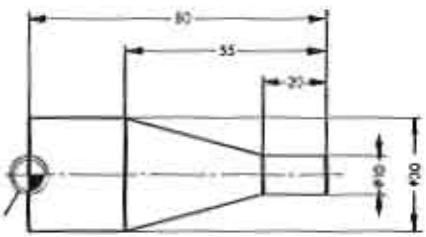

Example:

The points P_1 /P_2 /P_3 are programmed. The point P_1 is always written absolute.

1. Programming of absolute value in X- and Z-axis

N../G90
N../G00/X10/Z80
N../G01/X10/Z60
N../G01/X30/Z25

2. Programming of incremental value in X- and Z-axis

N../G90
N../G00/X10/Z80
N../G01/U0/W20
N../G01/U10/W35

3. X-absolute / Z-incremental

N../G90
N../G00/X10/Z80
N../G01/X10/W20
N../G01/X30/W35

4. X-incremental / Z-absolute

N../G90
N../G00/X10/Z80
N../G01/U0/Z60
N../G01/U10/Z25

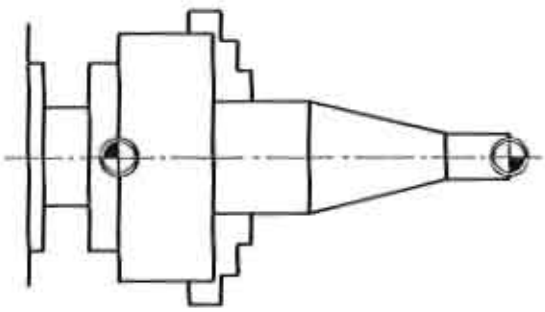

Exercise:

Carry out all 4 ways in programming

Program the workpiece zero point in the indicated position.

Address T (Tool)

Address format: T4 (T....)

T is the abbreviation for "TOOL".

N	G	X	Z	I	K	F	R	S	T	M

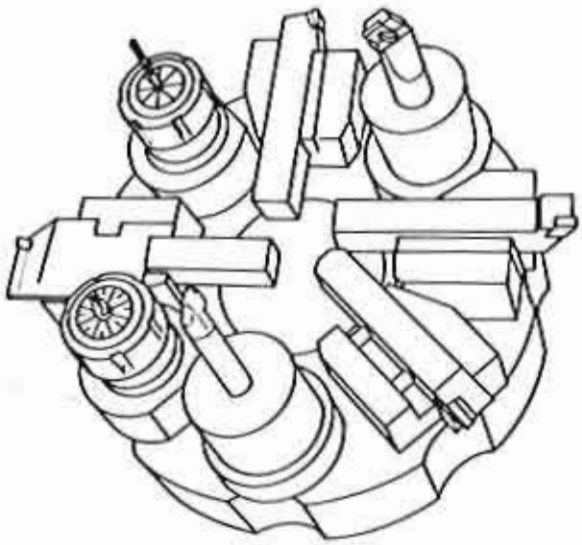

Industrial machines are quipped with tool holders which can hold 4,6,8,12 or more tools.

The toolholder of machining centers can hold 5o and more tools.

The tool change is done automatically and must be programmed.

Fixings for programming

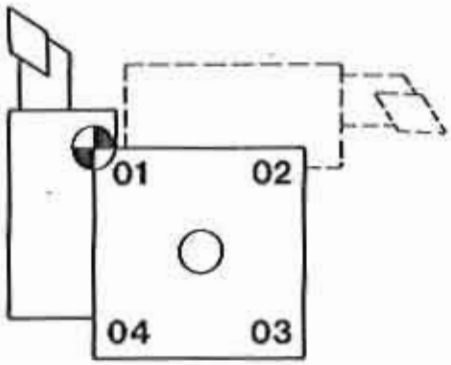

Position number (example: 4-way toolholder)

We have to inform the desired angle position to the computer. The instruction to the toolholder "Move by 27o°", would be too long, cumbersome and depending on the language.

Fixing

The 4 positions of the toolholder are numbered: O1../O2../O3../O4..

Example:

Programming for position O2.. in block 12O

N		T	M
12o		o2..	o6

The toolholder will move to position O2.

Tool pre-setting

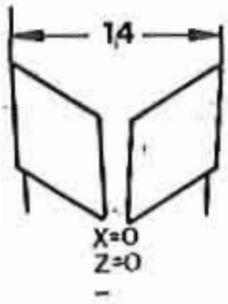

Like on the COMPACT 5 CNC the tools must be pre-set, so the position of the edges in X- and Z-axis to each other are known.

Why a tool pre-setting device?

The setting of tools direct at the NC-machine would be uneconomical, because the machine would be blocked too long (cost factor).

The tool setting point E (Symbol ⊕)

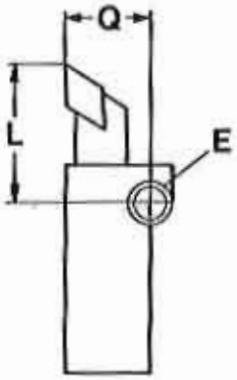

a) Origin for the measurements and setting is a point on the toolholder. This point is called the tool setting point.

b) This is the reference point for positioning the tool.
L = distance in X-axis
Q = distance in Z-axis

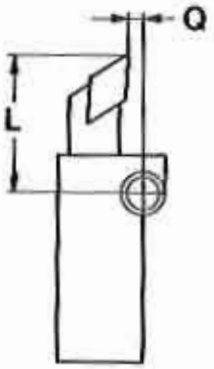

The setting chart

Right hand tool:
L = 6o mm
Q = 3o mm

Left hand tool:
L = 6o mm
Q = 15 mm

The measures/dimensions L/Q are entered in the setting chart, so that both - the tool pre-setter and the programmer - know the position of the tool edge.

The tool storage and the tool number

Do you remember exercise 8.21? When changing from the right hand to the left hand side tool, we had to take into account the dimension 14 mm in the program. We had to calculate.

With industrial NC-machines this calculation work is taken over by the computer. We have just to enter the relative data.

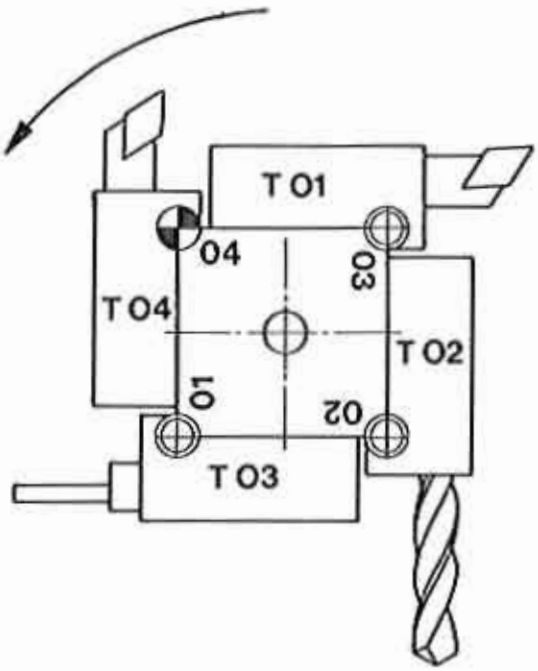

Programming

Address format: T4

T.. ..

Number of tool (TO1, TO2, TO3, TO4)

Position number (O1/O2/O3)

- The first figures stand for the position of the toolholder.
- The second two figures indicate the number of the tool. Under this number the tool data are stored (L/Q/R etc.)

Example:

N		T	M
oo		o4o4	o6
12o		o3o1	o6

TO3O1

The tool holder turns in block 12o to position O3.

TO3O1

The computer knows the L/Q/R values and calculates the movement. These values must however be entered into the tool storage.

Input in the tool storage

We have to put into the tool storage the tool data for each tool (T01, T02 ..)

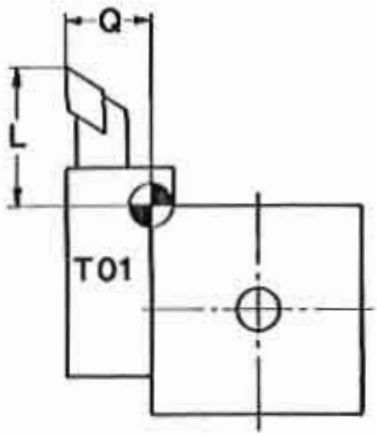

Example:

Tool: T01
L = 25 mm / Q = 4 mm
R = o,8 mm

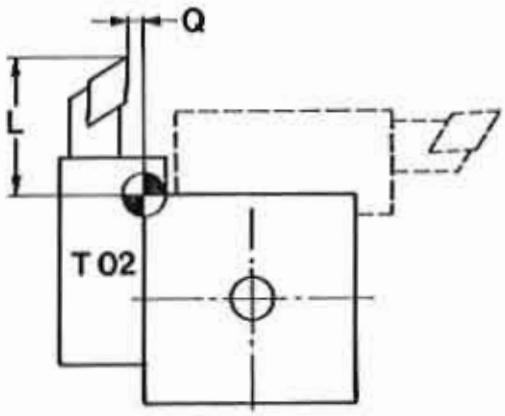

Tool: T02
L = 25,8 mm / Q = 2o mm
R = o,8 mm

Inputs

1. L-value

2. Q-value

3. Cutting radius "r" for calculation of the equidistant (radius compensation).

4. Position of the cutting radius (1,2, 3,4,5 etc.) so the computer knows whether the calculated correction value has to be added or substracted.

How comes the tool tip K to point P with this programming?

	N	G	X	Z
	00	90		
	01	92	ØXMR=ØXMN	ZWR=ZMR-ZMN
P_1	02		+ØX	+Z

Procedure:

Block N00:G90 = Programming of absolute value

Block N01:G92 = Offset of the coordinate system by ZWM

Block N03: Tool traverses to position Ø X/Z.

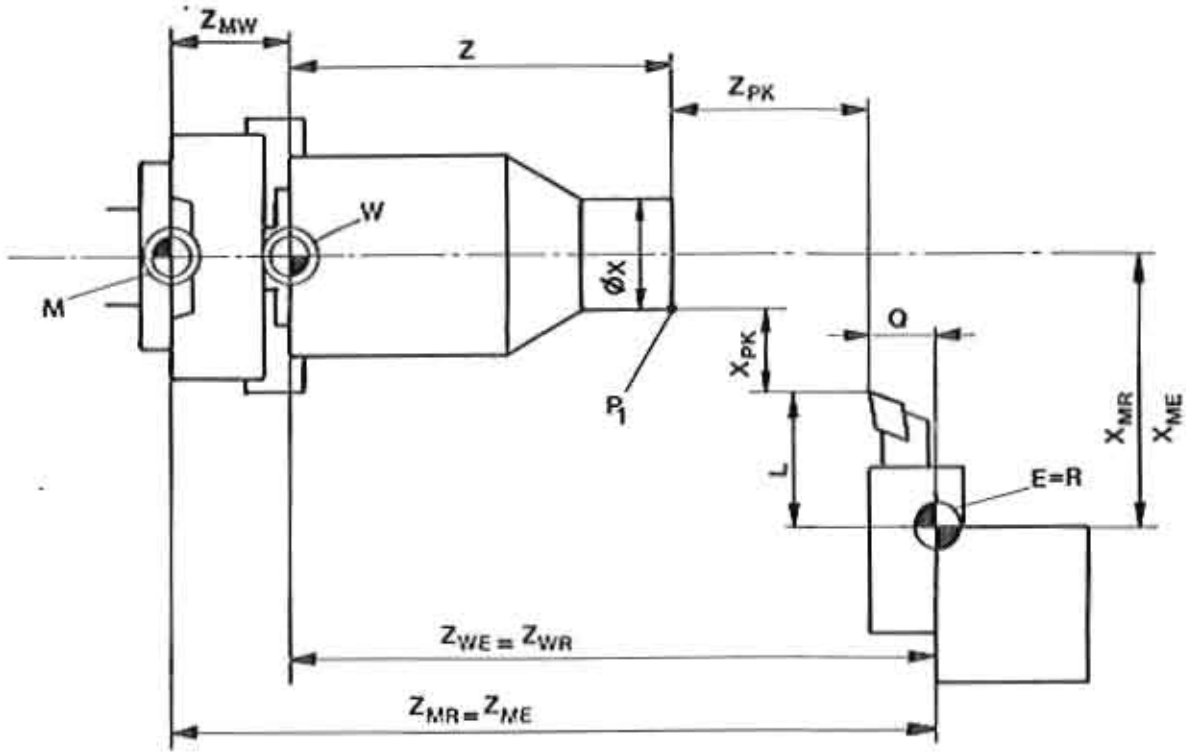

Run-off in Computer

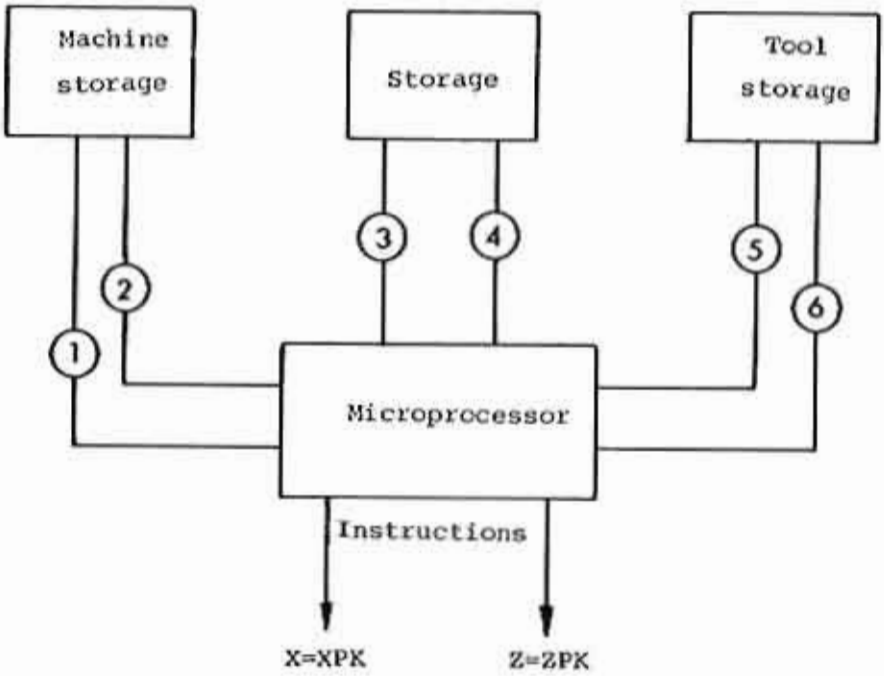

1. Microprocessor - Machine storage

How large are the distances R to M?

2. Machine storage - Microprocessor

The distances are XMR and ZMR

3. Microprocessor - Storage 1

Is machine zero point offset?

4. Storage 1 - Microprocessor

Yes: Instruction G92 in block N01 was given. New zero point is offset by distance ZMW.

Microprocessor: I have to substract ZMW with all Z-values.

5. Microprocessor - Tool storage

How large are the distances of the cutting tips K and R?

6. Tool storage - Microprocessor

No, the distances R to K are L and Q.

Microprocessor: so I have to take into account L/Q.

CALCULATION WORK OF MICROPROCESSOR

I have to instruct to traverse to Ø X and dimension Z.

1. Z-direction:

ZMR - ZMW - Q - Z = ZKP
So I have to traverse by ZKP.

2. X-direction:

XMR - L - Ø X = XKP
I have to traverse in X-direction by XKP.

10. NEW SOFTWARE – EXTENSION

SUMMARY 10.1

EXTENSION OF FUNCTIONS G00, G.01 10.2 – 10.3

INSERTING DELETING OF BLOCKS 10. 4

G94 -G95 10. 5 -10.7

G90 -G91 -G24 -G92 10. 8 -10. 16

G26 10.17 -10.25

THE AUTOMATIC TURRET TOOLHOLDER 10.26 -10.29

THE OPTICAL PRESETTING DEVICE 10. 30 -10.37

POSSIBLE COLLISIONS 10. 38 -10. 41

TIPS 10.42 -10.43

COMPACT 5 CNC with New Software Package (CPU-A6C 114 003)

Summary

More G-Functions

G90 Absolute Dimension
Absolute Value Programming

G91 Incremental Dimension
Incremental Value Programming

G92 Preload Registers programmed offset of reference point

G94 Feed per Minute

G95 Feed per Spindle Revolution, in mm/rev (inch/rev)

G26 Tool Offset
Tool compensation and calculation of data in own absolute value system

G23 "DNC Interface"

G24 Radius Programming: X-values are calculated with G24 as radius

More Memory and Computer Functions

+ Number of blocks: 16o
  NOO ..... up to N159

+ Program and execute any desired angle. Alarm sign A07 (undefined angle programmed) is not given anymore.

+ GOO allows any desired angle to be traversed.

+ Speed of computer calculation is improved.

+ Blocks can be added or deleted at later stage.

Additional Facilities using Turret Board

+ Mounting of turret toolholder possible

+ DNC Interface

+ Switching information exit

General:

The initial status (switch-on-status) remains unchanged, i.e. programming and working is possible the way as up to now.

Information for Books "BASIS" and "INSTRUKTOR"

With the expansion of the computer functions, the format for G00 changes. Since angles can be programmed, the Z-coordinate has to be put in. In all programs with G00 and movement in X-direction Z=0 has to be programmed.

If there are no G24/G90/G92 programmed, all values will be taken as incremental ones. If no G95 is programmed, the feed will be in mm/min. So there is no change as compared with up-to-now programs, except that with G00 the Z-value has to be put in.

Start of Program

After input of G22 the key "START" has to be pressed twice.

After
- Program interruption (INP + REV)
- Dwell G20/G26

however START has to be pressed just once to carry on with the program.

G00 – Positioning with Rapid Traverse

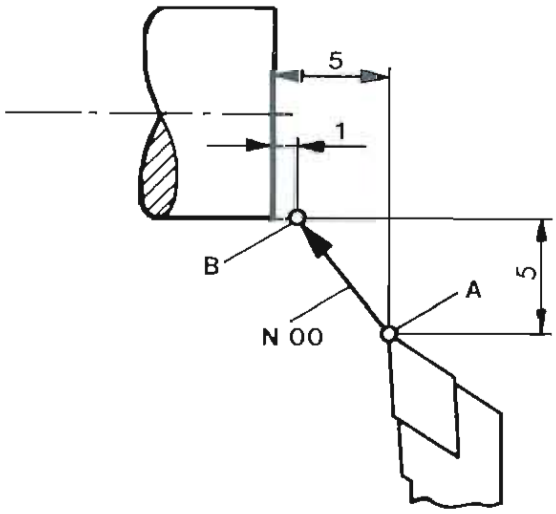

Also with rapid traverse the slides move in any desired angle.

Input format G00
N. . ./G00/X ± . . . . /Z ± . . . . .

Example:

Turning tool moves from point A to point B with rapid traverse.

N	G	X	Z	F
00	00	-500	-400	
01	22			

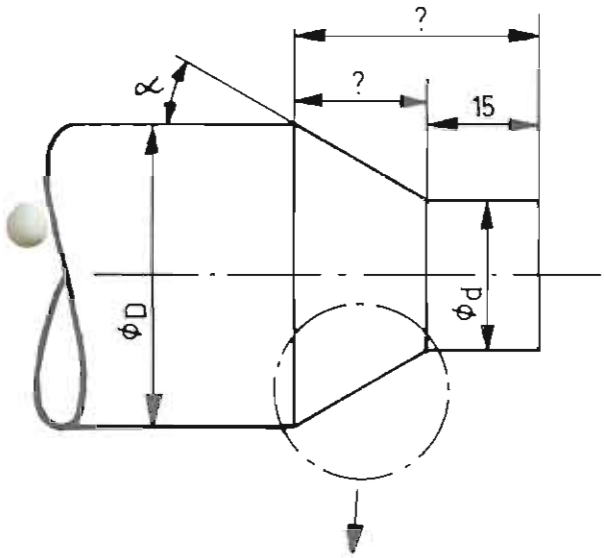

Angles with G00 and G01

In technical drawings you often do not find the length of the angle but just the angle indicated.

The Z-coordinate has to be calculated via the angular functions.

$$\operatorname{tg} \alpha = \frac{\frac{D - d}{2}}{Z}$$

$$Z = \frac{\frac{D - d}{2}}{\operatorname{tg} \alpha}$$

The X-value is known from the difference in diameter. The Z-value has to be calculated.

The tangens values can be read from the charts or slide rules or calculators.

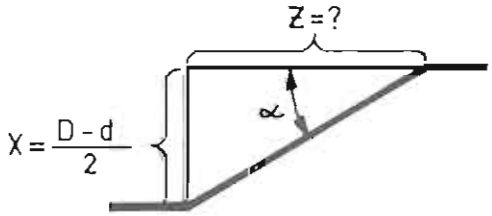

Common angle with turned parts

α	tg α
15°	0,268
30°	0,577
45°	1
60°	1,732
75°	3,732

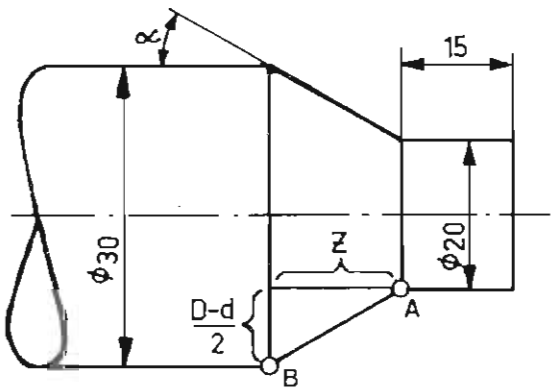

Example:

$$\operatorname{tg} 30^\circ = \frac{\frac{D - d}{2}}{Z}$$

$$Z = \frac{\frac{D-d}{2}}{\operatorname{tg} 30^\circ} = \frac{\frac{30-20}{2}}{\operatorname{tg} 30^\circ} = \frac{5}{0{,}577} = 8{,}66 \text{ mm}$$

Programming from A to B (incremental)
N.../G01/X=500/Z= -866/F...

Inserting and Deleting of Blocks

Press [~] + [INP] = Insert blocks

Press [~] + [DEL] = Delete blocks

Note:

Press first [~]
then [INP]
([~] remains pressed)

N G X Z F A

02

Example: [~] + [INP] **: Insert blocks**

[~] + [INP]

N	G	X	Z	F
00	00	-150	0	
01	01	0	-5000	100
02	00	0	700	
03	01	-100	200	100
04	01	100	200	-"-
05	00	0	300	

+ Read-out indicates block NO2

+ Press [~] + [INP]

N	G	X	Z	F
00	00	-150	0	
01	01	0	-5000	100
02	21			
03	00	0	700	
04	01	-100	200	100

+ In block NO2 the G21 instruction will be written automatically.

+ The original block NO2 is transscribed automatically to NO3 - all subsequent blocks the same way.

N	G	X	Z	F
00	00	-150	0	
01	01	0	-5000	100
02	20			
03	00	0	700	
04	01	-100	200	100

+ Any desired instruction can be programmed in block NO2, e.g. delete G21 and program G20 dwell instead.

Example : Deleting [~] + [DEL]

+ Read-out shows NO2

+ Press [~] + [DEL]

+ NO2 is deleted

+ All subsequent blocks are re-numbered: NO3 → NO2, NO4 → NO3, etc.

G94 – Indication of Freed rate in mm/min (inch/min)

G95 – Indication of Feed size in mm per revolution (inch per revolution)

Switch-on-status (initial status)

If G94 and G95 are not programmed, the feed is put in and calculated in mm/min.

Programming of G94/G95

Format G94	Format G95
N. . ./G94	N. . ./G95

G94 and G95 are self-holding functions.
That means: G94 is valid until it is revoked by a G95 instruction and vice-versa.

Feed Sizes, Inputs and Resolution

G94 (mm/min)

Metric inputs

Resolution: mm per minute,
possible inputs: 2 - 499 (mm/min)

Inch inputs

Resolution: 1/10 inch per minute,
possible inputs: 2 - 199 (= o,2 - 19,9 inch/minute)

G95 (mm/rev)

Metric inputs

Resolution: 1/1000 mm per revolution,
possible inputs: 2 - 499
(o,oo2 - o,499 mm/rev)

Inch inputs

Resolution: 1/10,000 inch per revolution,
possible inputs: 2 - 199 (0,0002 - 0,0199 inch/rev)

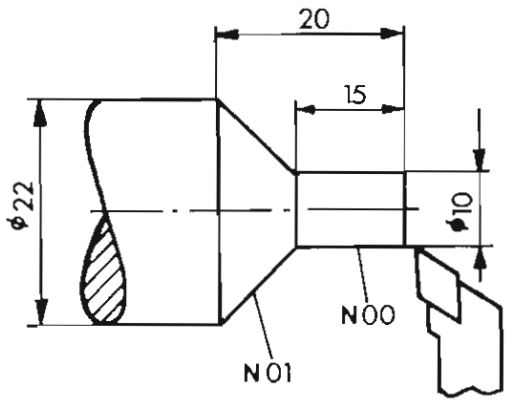

Example 1

N	G	X	Z	F
00	01	0	-1600	100
01	01	600	-500	120
02				
03				

If no G94 or G95 is programmed, then all feed values will be calculated as feed rate.

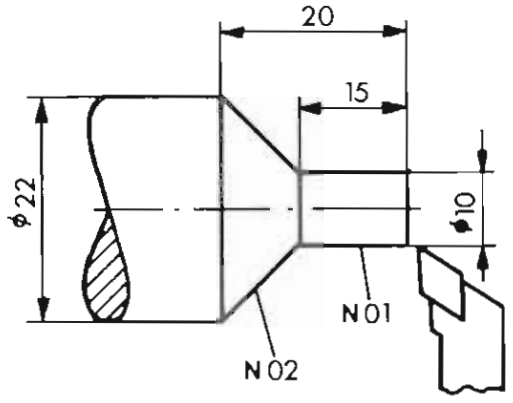

Example 2

N	G	X	Z	F
00	**95**			
01	01	0	-1600	50
02	01	600	-500	40
03				
04				

In block NO1 the feed is o,o5o mm/rev, in block NO2 the feed is o,o4o mm/rev. The feed indication is taken as "feed per revolution) until a G94 instruction is given.

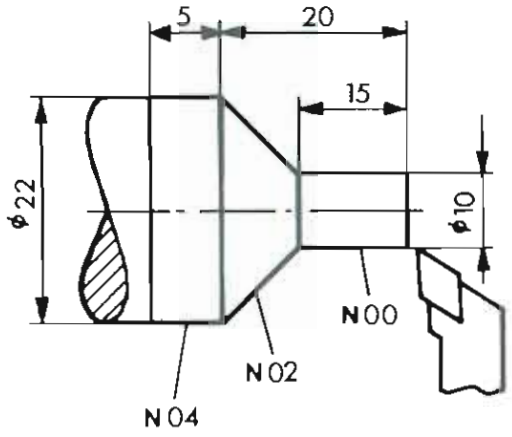

Example 3

N	G	X	Z	F
00	01	0	-1600	120
01	**95**			
02	01	600	-500	40
03	**94**			
04	01	0	- 500	100

Block NOO: mm/min (12o mm/min)
Block NO2: mm/rev (o,o4 mm/rev)
Block NO4: mm/min (1oo mm/min)

Starting the program if G95 (mm/rev or inch/rev) is programmed

The program runs only if the main spindle is switched on, since the computer has to synchronize main spindle revolutions and feed rate. If there is no information on the main spindle speed, the computer cannot give any information in mm/rev.
The speed of the tool slides depends on the spindle speed if there is constant cutting speed.

Example 1

Main spindle speed 1oo rev/min
Programmed feed o,1 mm/rev
The slide moves per minute
1oo x o,1 mm, thus 1o mm.

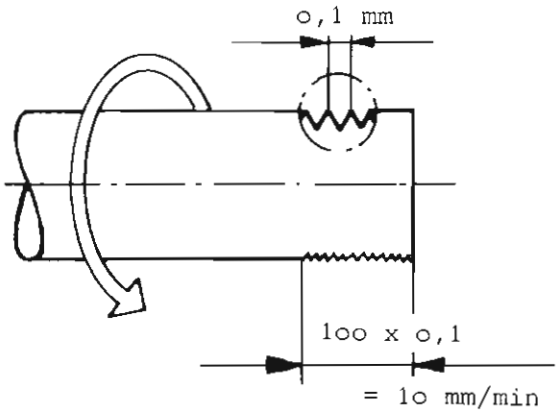

Example 2

Main spindle speed 1ooo rev/min
Programmed feed o,1 mm/rev
The slide moves per minute
1oo mm, thus 1o times the distance when compared with a spindle speed of 1oo rev/min

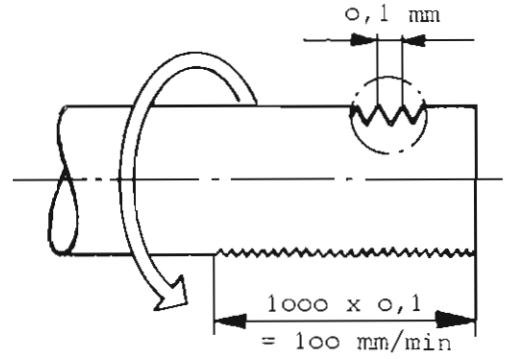

Limitation of the Maximum Feed per Revolution by the Main Spindle Speed

The max. feed rate with the feed per revolution is automatically limited with 499 mm/min.

Example:

Main spindle speed is 3000 rev/min.
G95 programmed feed per revolution:
o,499 mm/rev (max. programmable feed per revolution)

F (mm/min) = S (rev/min) x F (mm/rev)
= 3000 x o,499 = 1497 mm/min

The speed of the slide would be 1497 mm/min. With this spindle speed the slide moves at approx. o,17 mm/rev even though o,499 mm/rev are programmed.

$$\frac{499 \text{ mm/min}}{3000 \text{ U/min}} = 0{,}166 \text{ mm/U}$$

Compare technological data, pages 1.8-1.1o.

G90 – Absolute Dimension
G91 – Incremental Dimension
G92 – Preload Registers
(programmed offset of reference point)

General:

G90/G91/G92 are self-holding instructions and are valid until they are revoked or modified.

Switch-on-status (initial status)

If no G90/G91/G92 is programmed, all dimensions are calculated incrementally.

G90 – Absolute Dimensions
Programming of Absolute Value
Programming of Reference Point

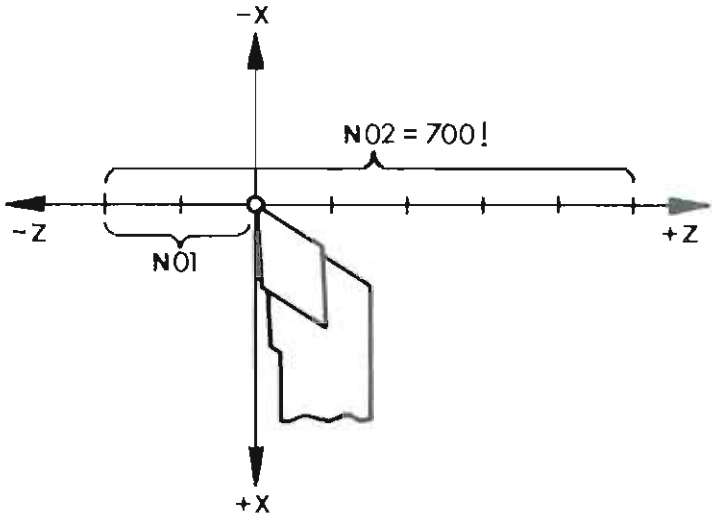

Format G90
N. . . /G90

Example 1: Z-Dimensions

You put in the program:

N	G	X	Z	F
00	90			
01	01	0	-200	100
02	00	0	+500	100
03	22			

Zero point of the coordinate system is the actual position of the slides when programming G90 the first time in a program (if no G92 was programmed before).
In block N02 Z +5oo is programmed. The slide, however, moves +7oo (+7 mm).

Note:

Coordinate zero point is the position of slides (tool) when G90 is programmed the first time in the manuscript.

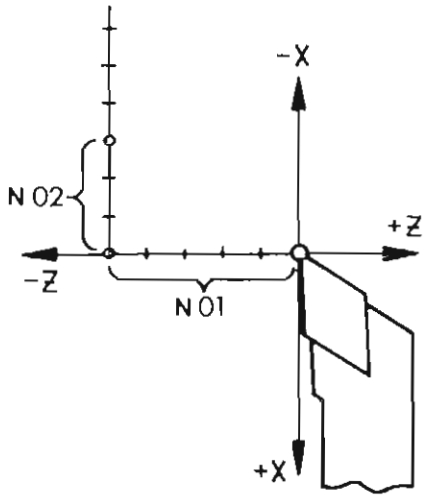

Example 2: X-Dimensions

X-values are calculated as diameter values with G90.

N	G	X	Z	F
00	90			
01	00	0	-500	
02	00	-600	0	
03	22			

Explanation:

Most dimensions of turning parts are given as diameters. Therefore it is more comfortable to program diameters.

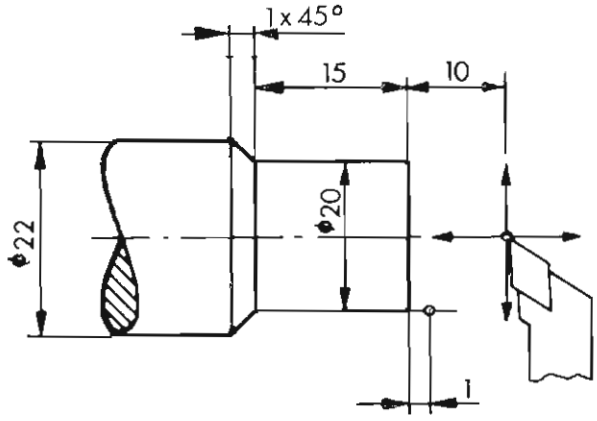

Example 3:

- Position of right-hand side tool is at program start as in drawing.
- The zero-point of the coordinate system is at the top of the tool.
- Programming of points 0 to 4.

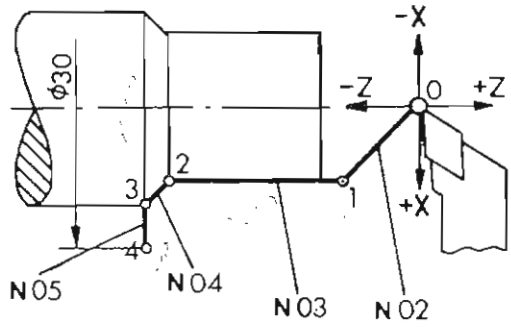

Remember

In block N01 G90 is programmed.
Actual position (slide positions) determines the coordinate zero-point.

PROGRAMMING SHEET EMCO COMPACT 5 CNC

N	G	X	Z	F	Remarks	S (1/mm)
00	95				Feed in mm/rev	
01	90				Absolute dimension	
02	00	2000	-900		X-value = diameter value from point 0 to 1	
03	01	2000	-2500	30	From point 1 to 2	
04	01	2200	-2600	30	From point 2 to 3	
05	00	3000	-2600		From point 3 to 4	
06	22					

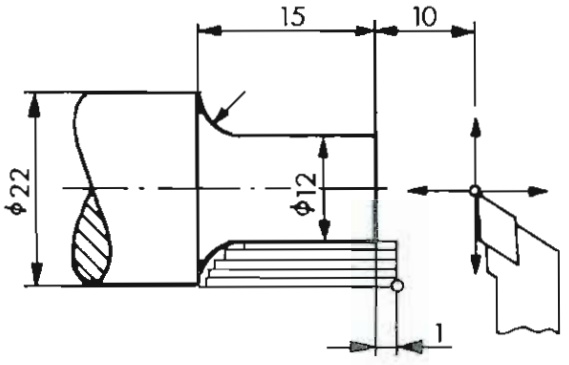

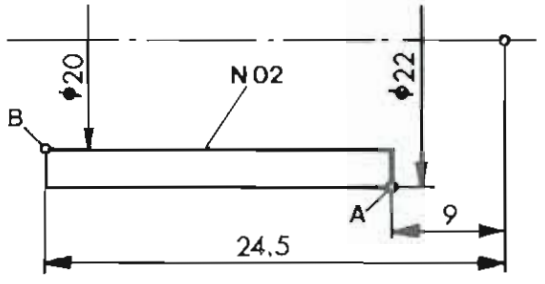

Example 4: G84/G78

Cycle G78/G84 is determined by programming of point B (between second and third step). The cycle starts in point A which was programmed last.

N	G	X	Z	F
00	90			
01	00	2200	-900	
02	84	2000	-2450	120
03	84	1800	-2430	120
..	..	....	....	...

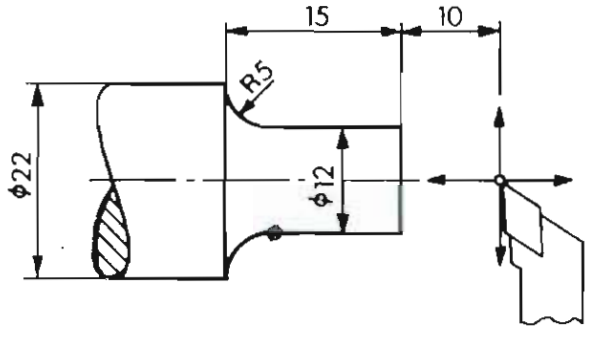

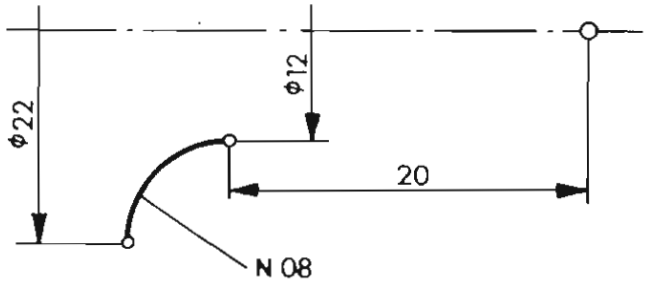

Example 5: G02/G03

With G02/G03 the end point of the 4th path of circumference is programmed in absolute dimension. The tool moves along the fourth path of circumference between the point programmed last and the point programmed under G02/G03.

N	G	X	Z	F
.	90			
.				
.				
07	01	1200	-2000	120
08	02	2200		120
.				
.				

Mixed Programming
G90/G91

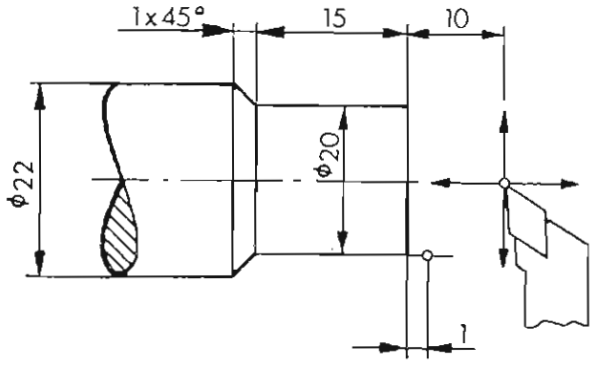

The instruction G90 is invalidated by G91 until G90 is programmed again. The computer, however, remembers the zero-point of the coordinates once existing within a program, which was fixed with the first programming of G90.

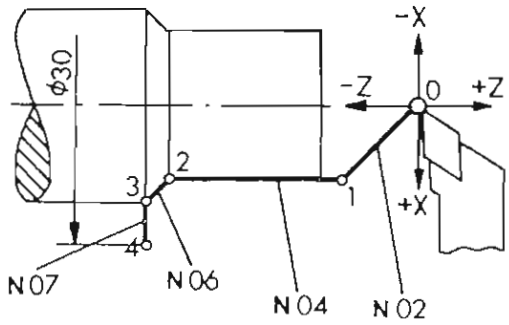

Example:

Points 0 to 4 are being programmed. Position of tool bit when starting as in drawing.

PROGRAMMING SHEET COMPACT 5 CNC

N	G	X	Z	F	Remarks
00	95				
01	**90**				Absolute dimension
02	00	2000	-900		From point 0 to point 1
03	**91**				Incremental dimension
04	01	0	-1600	30	From point 1 to point 2
05	**90**				Absolute dimension
06	01	2200	-2600	30	From point 2 to point 3
07	00	3000	-2600		From point 3 to point 4

Attention:

If you press "START" once again, the coordinates zero point would be point 4, because with the first instruction G90 the tool slides were positioned in point 4.

Attention with Mixed Programming

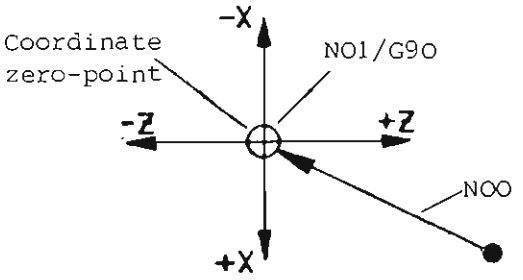

Demonstrating example:

1. When programming G90 the zero point of the axis system is the slide position with the first G90 programming.

N	G	X	Z	F
00	00	-100	-200	
01	90			

2. If in a program G90 is followed by G91 and then G90 again, the coordinates system is valid which was determined in the first G90 information.

3. Except with inside turning an absolute value programming is not useful or possible without G92, because the tool bit is positioned in the zero point of the workpiece with the first G90 programming.

G92 – Preload Registers
Programmed Offset of Reference Point

In the previous examples we have learned that the zero-point of the coordinates is in the slides (tool) position in which G90 was programmed for the first time.

This would be unpractical because when programming G90 the tool can rarely be positioned on the center line axis in X-direction.
Using G92 you can shift (offset) the zero-point of coordinates on the machine where-ever you like it.
Subsequently with G92 all following values will be calculated on absolute basis. Programming of G90 is not necessary.

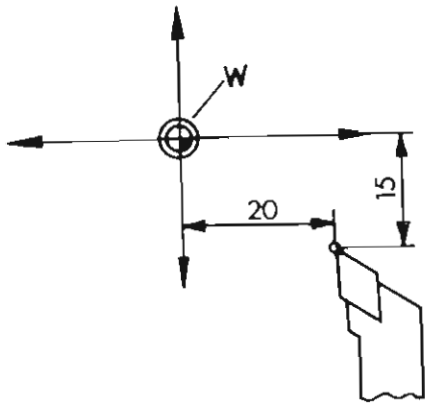

Example:
Zero-point of coordinates has to be offset from indicated top of tool to point W.

Offset

N	G	X	Z	F
..	92	+3000	+2000	

- Take the zero-point of coordinates in point W and describe the top of the tool (slides) starting from this point.

- X-values are indicated as diameter-values.

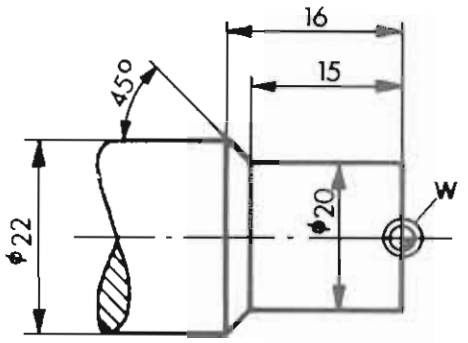

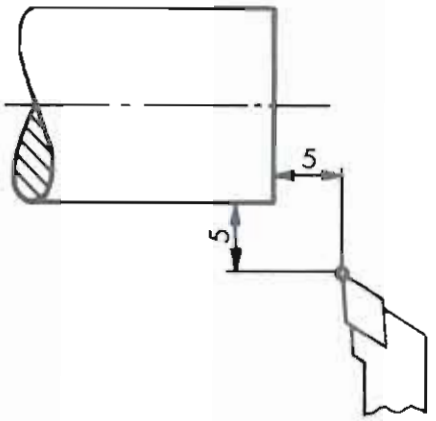

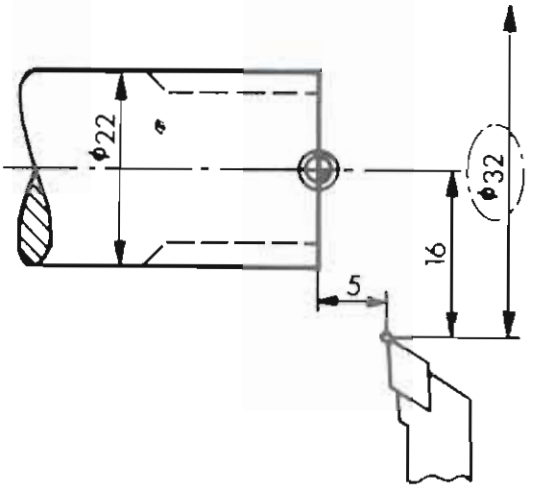

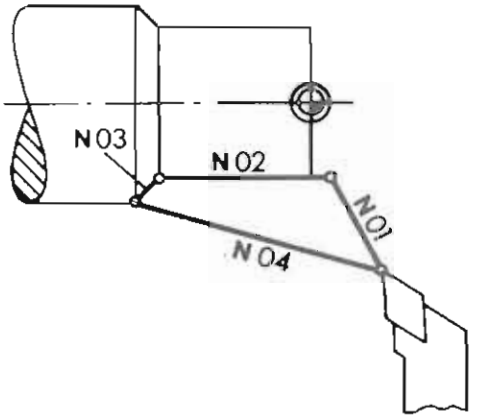

Example:

Measurements are put on from left hand side with this workpiece. Therefore it is useful to offset the zero-point of coordinates to the indicated position. This zero-point is called workpiece zero-point W (Symbol ⊕ W).

1. Positioning of tool when starting

The tool bit is moved into the position as indicated before the operation starts (via "scratching").
In this example: X +5 mm, Z +5 mm

2. Determination of the zero-point of coordinates

A logic zero-point of coordinates is the workpiece zero-point as indicated.

3. Offset

N	G	X	Z	F
00	92	3200	500	

The programming of the operation starts from the desired zero-point of coordinates.

Programming exercise

Position of tool bit as indicated

N	G	X	Z	F
00	92	3200	500	
01	00	2000	100	
02	01	2000	-1500	120
03	01	2200	-1600	120
04	00	3200	500	
05	22			
06				

G24 – Radius Input with Absolute Value Programming

When programming G90/G92 X-values will be calculated as diameter values. When milling this would mean calculation work.
G24 makes radius programming possible, i.e. X-coordinates are taken as absolute values but not as diameter values.

Programming

+ G24 has to be programmed in the first block (otherwise alarm A00)

+ G24 is self-holding

+ G24 cannot be revoked within a program

+ In the next block G90 must be programmed otherwise the values are calculated incrementally.

Format G24
N00/G24

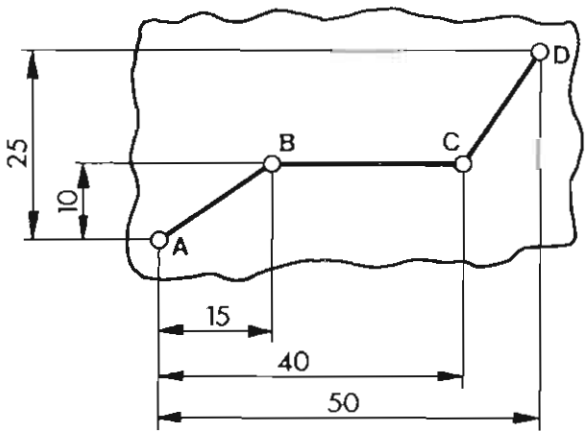

Example: 1

Plotter pen to move from point A to B,C D. Since points on drawing are indicated as absolute values, absolute value programming will be useful.

Program:

N	G	X	Z	F	
00	24				
01	90				
02	00	**-1000**	1500		A→B
03	00	**-1000**	4000		B→C
04	00	**-2500**	5000		C→D
05	22				
06					

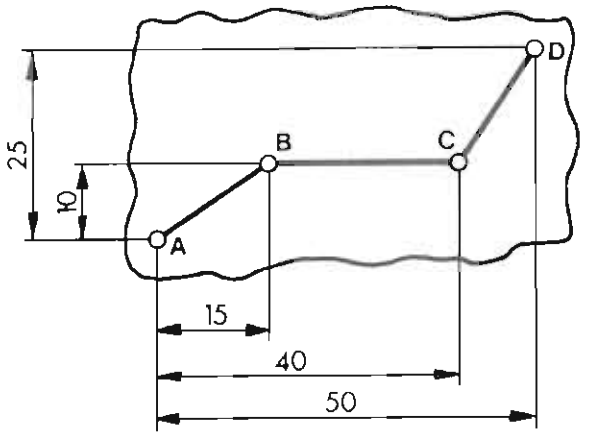

Example: 2

Describe B/C/D starting from point A, if you have programmed G90 in the first block.

N	G	X	Z	F
00	90			

Example:3

Describe the movements of the plotter of written program - Example 2 if in the first block G24 is programmed.

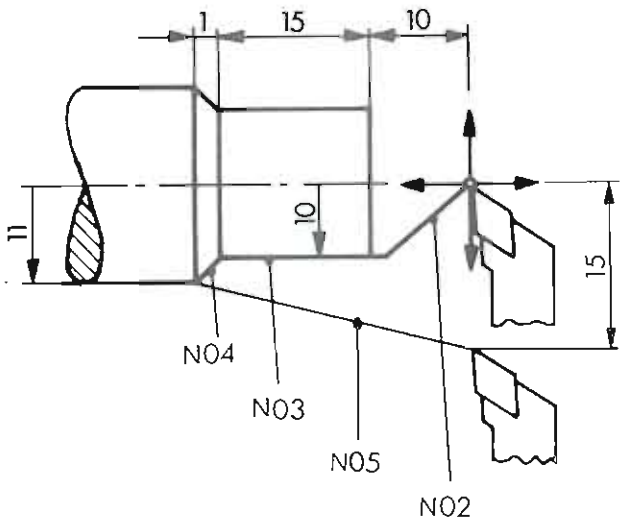

Example:4

N	G	X	Z	F
00	24			
01	90			
02	95			
03	00	1000	-900	
04	01	1000	-2500	30
05	01	1100	-2600	30
06	00	1500	0	
07	22			

G26 – Tool Data Processing
Tool Offset
Tool Wear Compensation

Repeat

The tools are preset using the setting gauge. The position of the tools to each other therefore is known (compare page 8.2o).
In the program the difference-values are calculated.

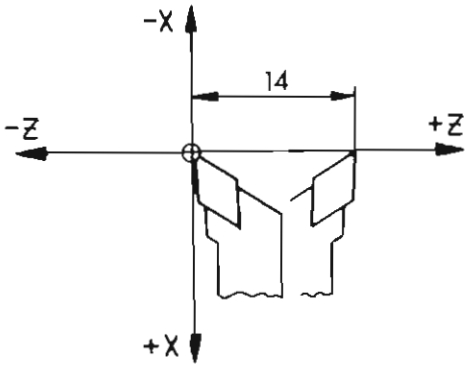

Example:

- The tool to start with is the right hand side tool.
- The cutting edge of the left hand side tool features the coordinate X=0, Z= +14 mm as seen from the zero-point of the right hand side tool (T01).
- When programming, this measurement has to be considered.

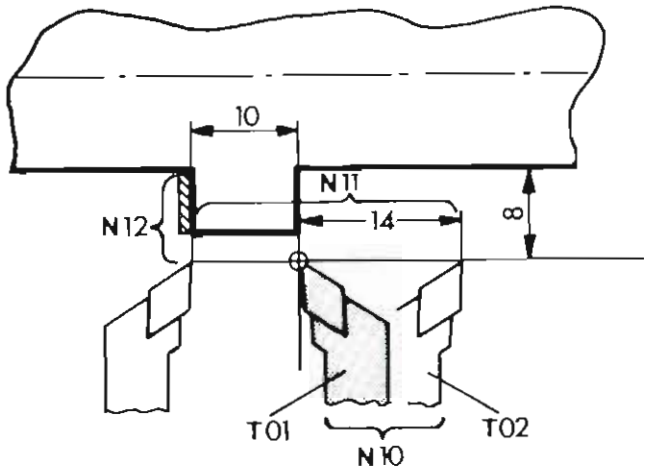

Programming Examples:

N	G	X	Z	F
..	..			
10	20			
11	00	0	-2400	
12	01	-800		

- When turning off the left shoulder, the right hand side tool has to be replaced by the left hand side tool.
- Position of the left hand side tool = Z +14 mm.
- In block N11 the distance -(14+1o) has to be programmed. You had to do this calculation. This calculation work can be taken over by the computer.

G26 – Tool Length Calculation

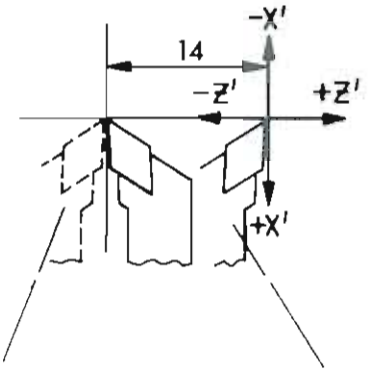

Desired value Actual value

Under G26 you can put in the coordinates of single tools. These values will be processed automatically.

We take the right hand side tool as reference tool.

We program the desired value of the left hand side tool.

X = 0
Z = – 1400

G26 with F=O means automatically dwell.

The data are processed in the following block:

Format G 26
N . . /X ± . . . /Z ± . . . /F = O

Note:

-Program desired position
-F = O means: Program hold

PROGRAMMING SHEET COMPACT 5 CNC .

N	G	X	Z	F	Remarks	S [1/min]
. .	26	0	0	0	Right hand side tool T01	
. .	26	0	-1400	0	Left hand side tool T02	

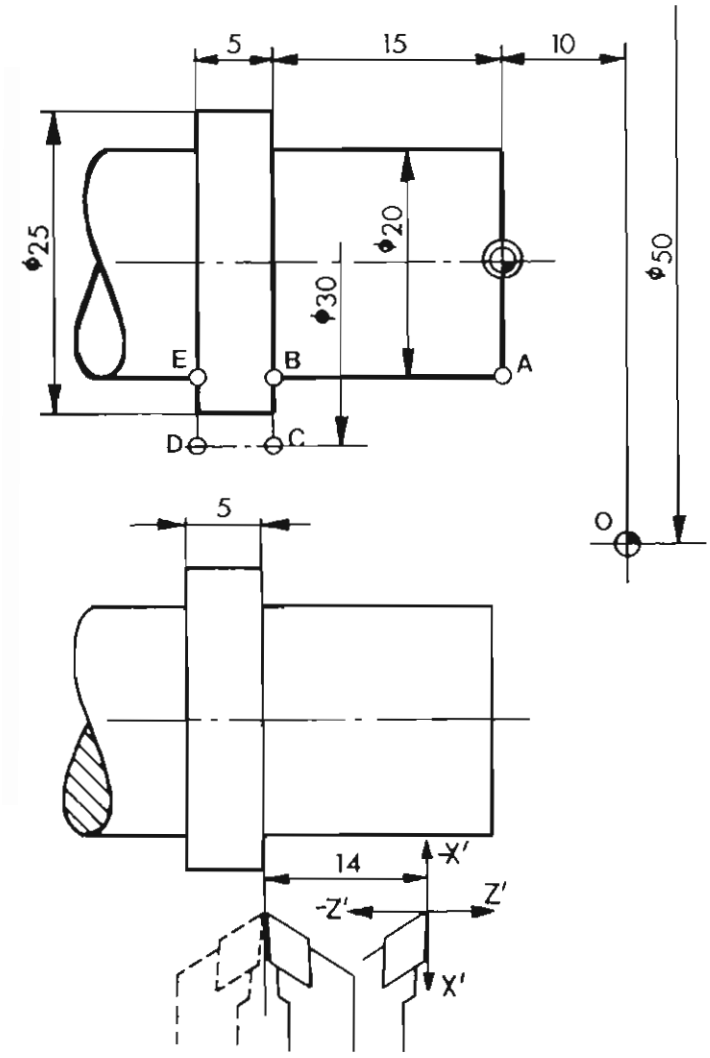

Example:

Programming contour ABC with the right hand side tool (TO1); DE with the left hand side tool (TO2).

Block NOO: Setting off the reference point
Block NO1: Coordinates of right hand side tool
Block NO2-NO4: Contour ABC

Block NO5:

- G26 with F = O means automatically "dwell".

- Tool change

- The position of left to right hand side tool is X=O/Z= +14 mm.

Block NO6:

- Traverse of left hand side tool T2 after pressing START in point D.

- The value Z= +14 mm is automatically taken into account.

- Although a slide movement of 5 mm (from Z -1500 to Z -2000) is programmed, the slide moves -19 mm.

Block NO7:

Movement from D to E.

N	G	X	Z	F	Remarks	S [1/min]
00	92	5000	1000		Tool TO 1	
01	26	0	0	0		
02	00	2000	0			
03	01	2000	-1500	100		
04	01	3000	-1500	100		
05	26	0	-1400	0	Tool TO2	
06	00	3000	-2000			
07	01	2000	-2000	100		
08						
09						

Positioning of cutting edges of tools to each other if slide position remains unchanged (Positions are adjusted with mechanical presetting gauge)

Right hand side tool: G26/X = 0/Z = 0/F = 0

Neutral Side Tool

Desired Position: X=0/Z=-700
G26/X=0/Z=-700/F=0

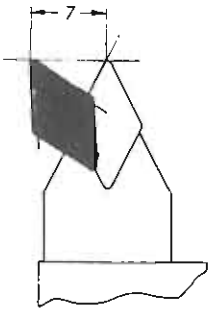

Left Hand Side Tool

Desired Position: X=0/Z=-1400
G26/X=0/Z=-1400/F=0

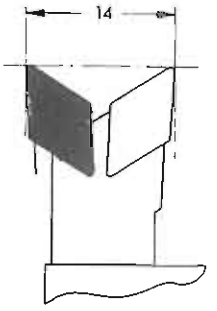

Parting-off Tool

Desired Position: X=0/Z=0
G26/X=0/Z=0/F=0

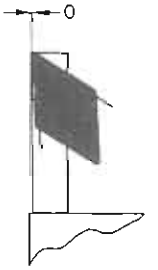

Outside Threading Tool

Desired Position: X=0/Z=-200
G26/X=0/Z=-200/F=0

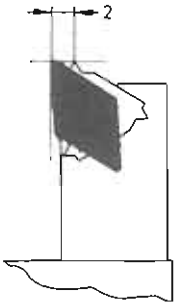

Plunging Tool

Desired Position:X=1000/Z=0
G26/X=1000/Z=0/F=0

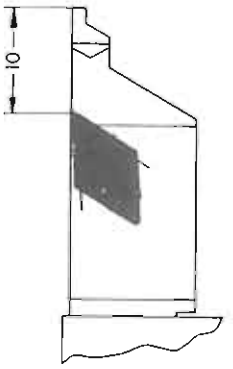

Inside Threading Tool

Desired Position: X=-1000/Z=2000
G26/X=-1000/Z=2000/F=0

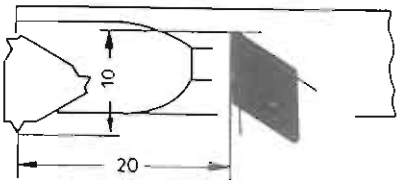

Inside Turning Tool

Desired Position: X=-1000/Z=2000
G26/X=-1000/Z=2000/F=0

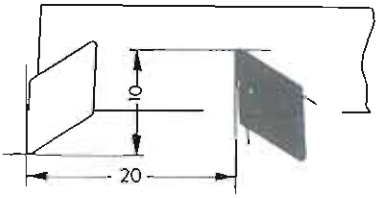

Compensation of Tool Edges

With tools which are worn off or not set accurately, the workpiece is not manufactured to measurement. G26 enables compensation values to be programmed.

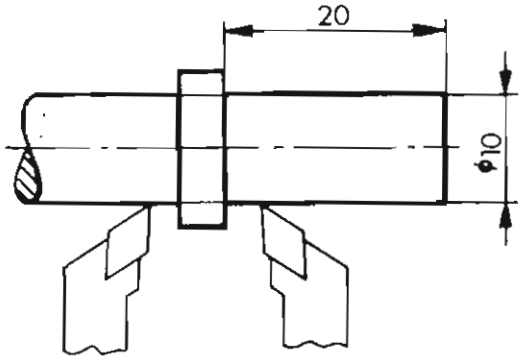

Example

You have programmed and manufactured the given workpiece. Right and left hand side tool were set using the tool presetting device.

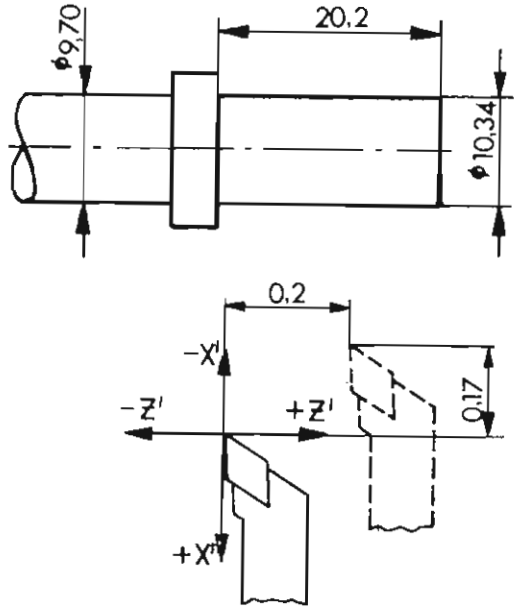

Right hand side tool

When measuring you find out that the diameter of the manufactured workpiece (with the right hand side tool) equals 1o,34 mm.

The desired value in X-direction is
X= -0,17 mm
The desired value in Z-direction is
Z= +0,2 mm

Compensation input:
G26/X= -17/Z= +20/F=0

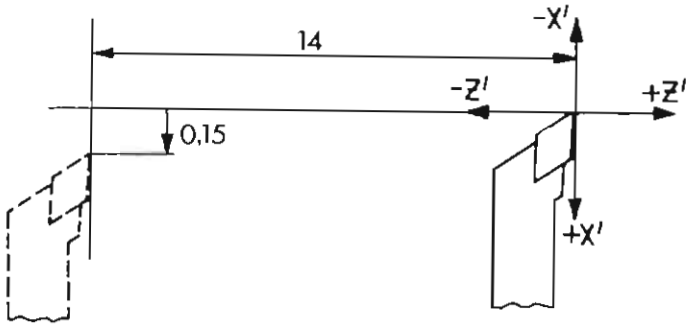

Left hand side tool

The diameter is too small by o,3 mm.
Desired value of the left hand side tool originally X=0/Z= -1400

Compensated desired value:
X= +0,15 mm
Z= -14,00 mm

Compensation input:
G26/X=15/Z= -1400/F=0

Original Tool Values

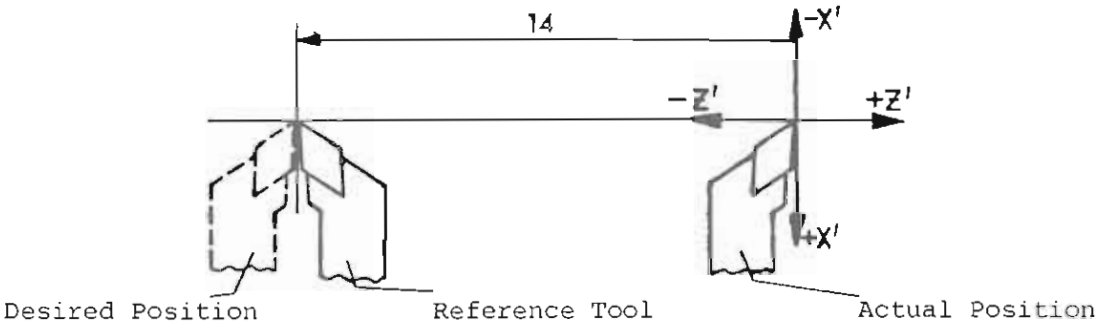

N	G	X	Z	F	Bemerkungen	S [1/min]
..	26	0	0	0	Right Hand Side Tool	
..	26	0	-1400	0	Left Hand Side Tool	

Compensated Tool Values

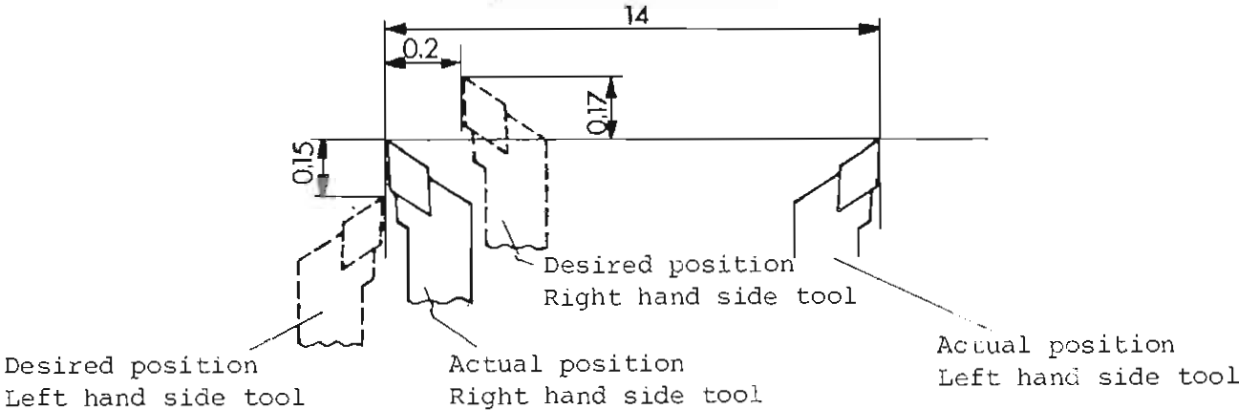

PROGRAMMBLATT EMCO COMPACT 5 CNC

N	G	X	Z	F	Bemerkungen	S [1/min]
..	26	-17	20	0	Right Hand Side Tool	
..	26	15	-1400	0	Left Hand Side Tool	

Exercises G92/G26

For a better understanding of G92/G26 mount the plotter device and execute following exercises:

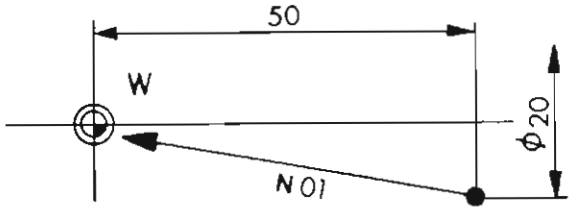

Example G92

N	G	X	Z	F
00	92	2000	5000	
01	01	0	0	400
02	22			

The plotter pen moves into the 0-point of the coordinates system (in X-direction -2000:2 = -1000 (-10 mm), in Z-direction -5000 (-50 mm).

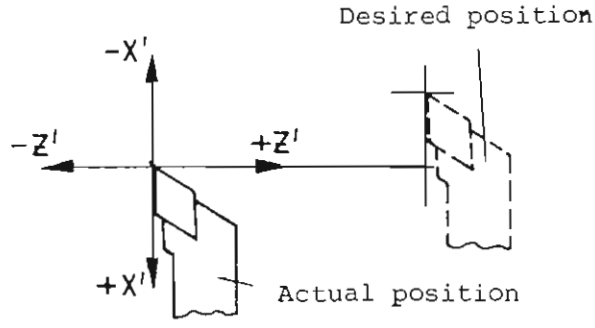

Example 1 on G26

Tool no. 1: Right hand side tool
Actual position: like indicated
X=0/Z=0
Desired position: X= -400
Z= +1500

Program originally:

N	G	X	Z	F
00	26	0	0	0
01	00	0	0	
02	22			

The traverse path in block N01 is programmed with 0.

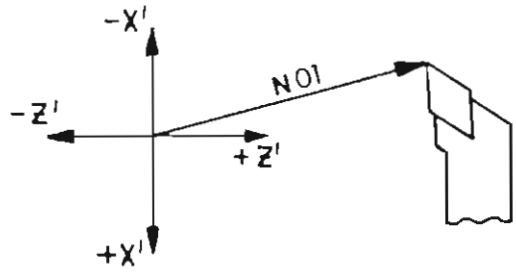

Program compensated:

N	G	X	Z	F
00	26	-400	+1500	0
01	00	0	0	
02				

Though the traverse path is programmed with 0 in block N01, the slide moves into desired position.

Note:

After G26 "START" has to be pressed.

Example 2 on G26

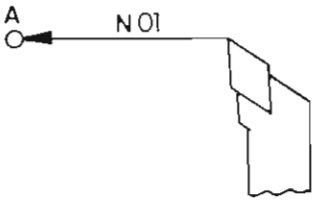

1. No tool compensation:

N	G	X	Z	F
00	26	0	0	0
01	00	0	-1000	
02	22			
03				

The slide moves the distance Z= -1000 to point A.

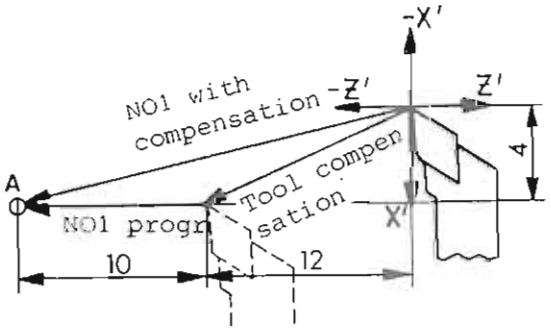

2. Tool compensation:

Actual position: X=0/Z=0
Desired position: X=400/Z= -1200

N	G	X	Z	F
00	26	400	-1200	0
01	00	0	-1000	100
02	22			

The computer calculates the shortest possible way to point A and moves to it diagonally.

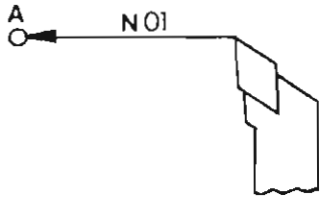

Example 3 on G26

Program:

N	G	X	Z	F
00	26	0	0	0
01	01	0	-1000	100
02	22			
03				

The tool bit or plotter pen moves Z -1000 to point A.

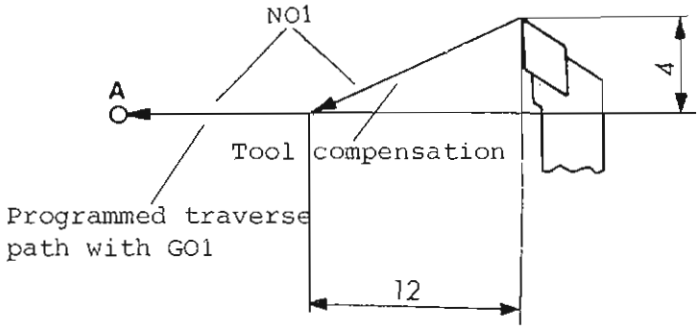

Program with compensated tool values

N	G	X	Z	F
00	26	400	-1200	0
01	01	0	-1000	100
02	22			
03				

The tool first moves according to the compensation X= 400/Z= -1200 (from actual to desired position) and then the programmed path of block N01 to point A.

Summary

- With all "working functions" (G01/G02/G03/G33/G78/G84) the desired position is headed first.
- If after a tool compensation in the following block G00 is programmed, then compensation and G00 information will be executed simultaneously in the shortest distance possible.
- Attention:

  X-values in connection with G26 will be calculated incrementally.

Operating the Turret Toolholder

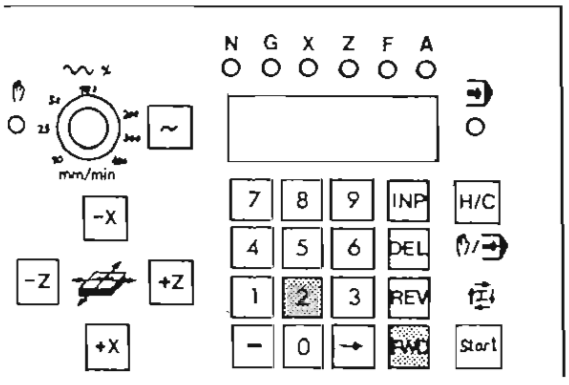

1. By hand:

Press key FWD and a number key, the turret will swivel by the number on the number key pressed.
For example: you press FWD and 2: the turret swivels twice.

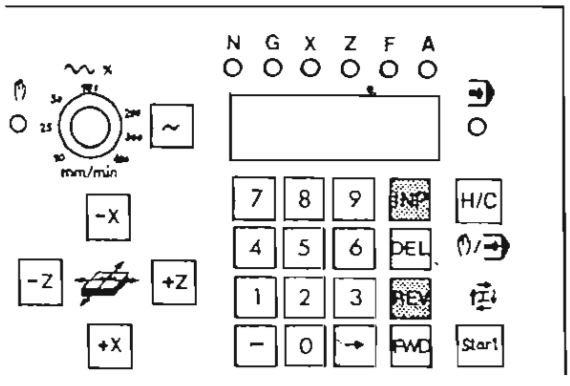

2. Swivelling in CNC-operation:

G23/X=0/Z=0/F..
Put in the number of positions to be swivelled under address F.
For example: G26/X=0/Z=0/F=2: the turret swivels by 2 positions.

Interrupting the swivel operation

Press key INP + REV

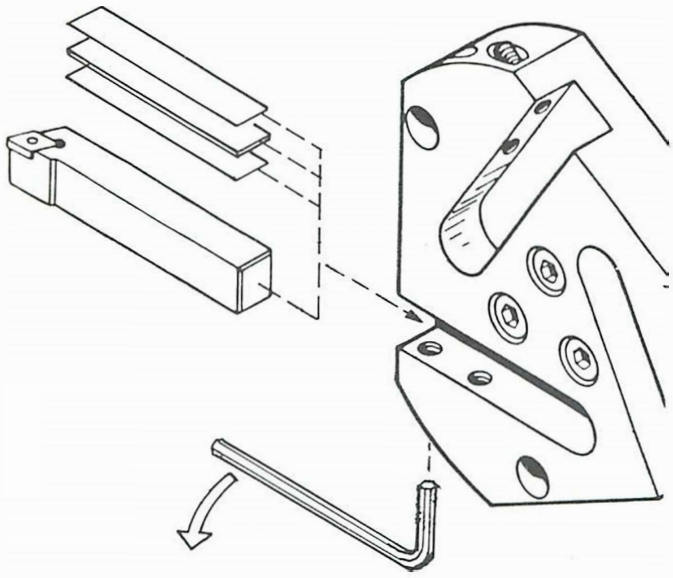

Mounting of tools:

The turret holds 3 outside and 3 inside tool bits.

Mounting of outside tool bits

Adjust tool bits to correct center height by using washers (o,2/o,5/1 mm), whereby tools should not stand out more than 13 mm.

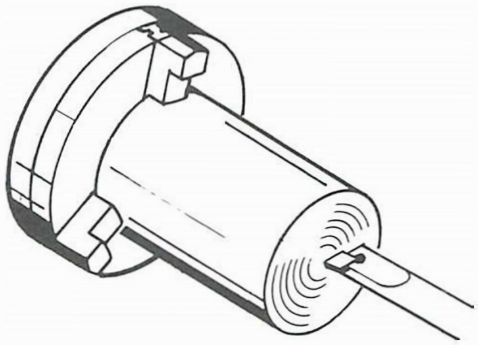

Mounting of inside tool bits

For drills use correct adaptor sleeve. Adjust inside turning tool and inside threading tool such that carbide tip is at center height. The correct adjustment is achieved by mounting a workpiece in the chuck.

Note:

If center height of the drill is not exact, loosen the socket head screws of the turret plate. Swivel the plate to reach center height and tighten screws again.

Tooling System for Automatic Turret Toolholder

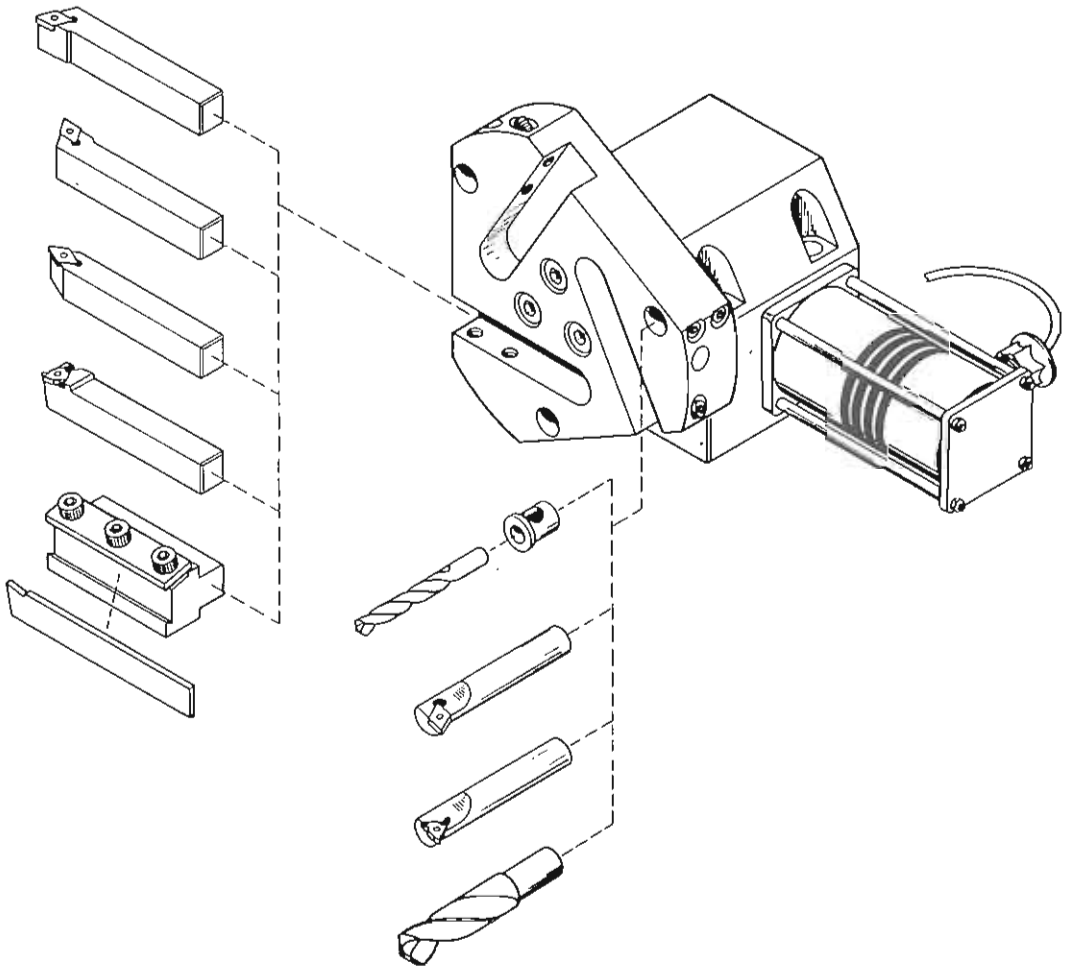

Tool data

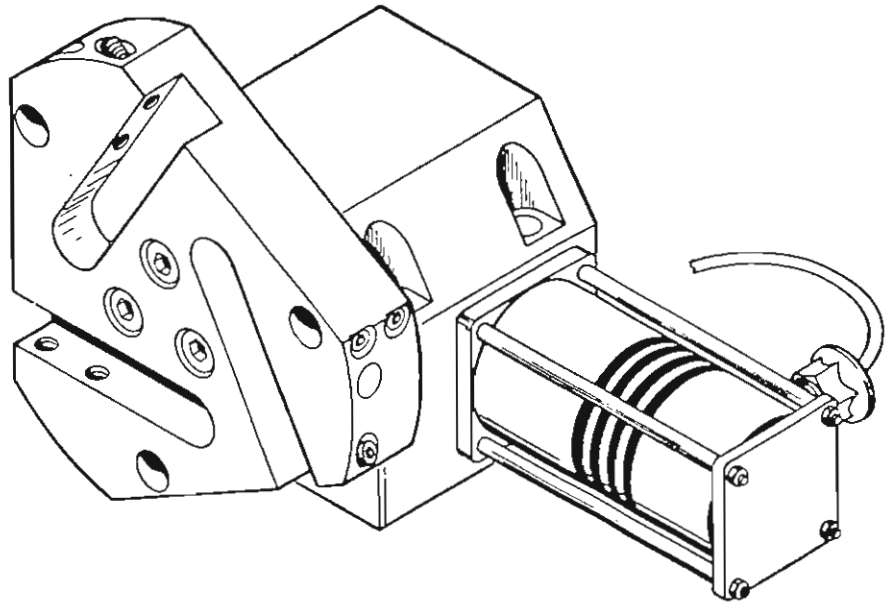

Draw the positions of the different tools so that you can program the respective divisions.

TOOL CHART

Tool	Position in turret	X-value	Z-value

Collecting tool data with optical presetting device.

By "scratching" the workpiece, one could measure the positions of the various tool edges to each other. This system would be very inefficient.

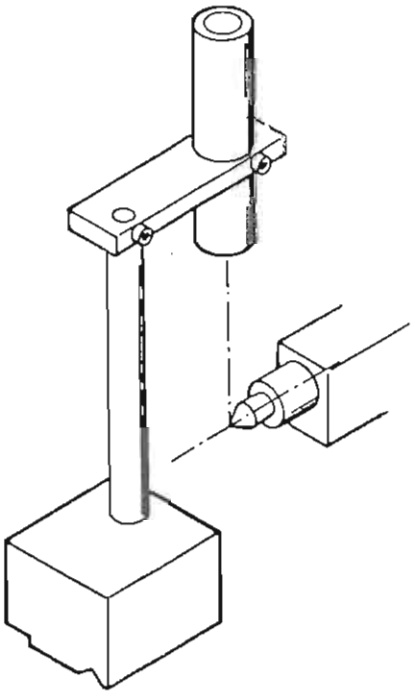

Procedure

1. Optical pre-setting device to be put onto machine bed and to be adjusted at axis center.

- Adjust tube in height until tailstock center appears clear and sharp.
- Clamp tube support such that cross wire is exactly on axis center.

Image inversion

Because of the given optics the image is reflected along the X/Z axis.
A point, seen through the pre-setting device, seems to be reflected along the X/Z axis.

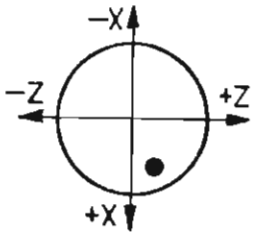

Point position seen without optics.

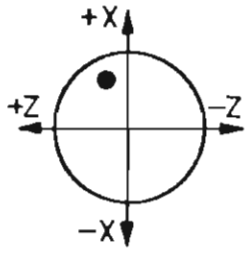

Reflected point position seen through the optical pre-setting device.

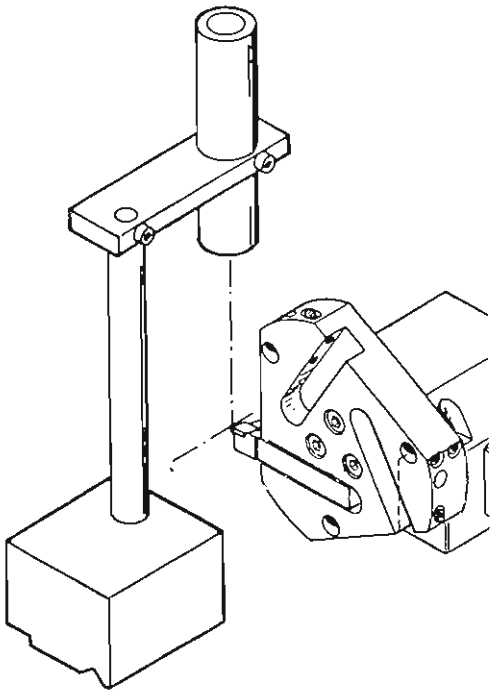

2. Collecting of tool data

- Place optical pre-setting device in front of turret.
- Move reference tool into cross wire. You can choose anyone tool as reference tool. A common reference tool will be the one with which you start the operation. If the tool is in the cross wire, set X and Z read-outs to zero.

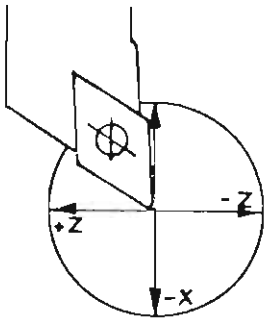

Right hand side tool in cross wire

Example: right hand side tool is reference tool.

- X and Z display read-out to be set at zero (press key DEL).
- Enter data into tool chart.

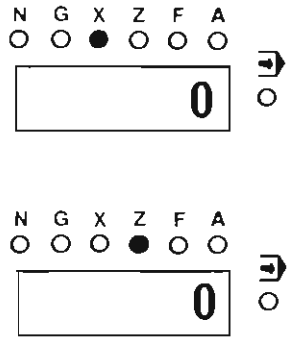

TOOL CHART

Tool	Position in turret	X-value	Z-value
R.H. Tool T01	1	0	0

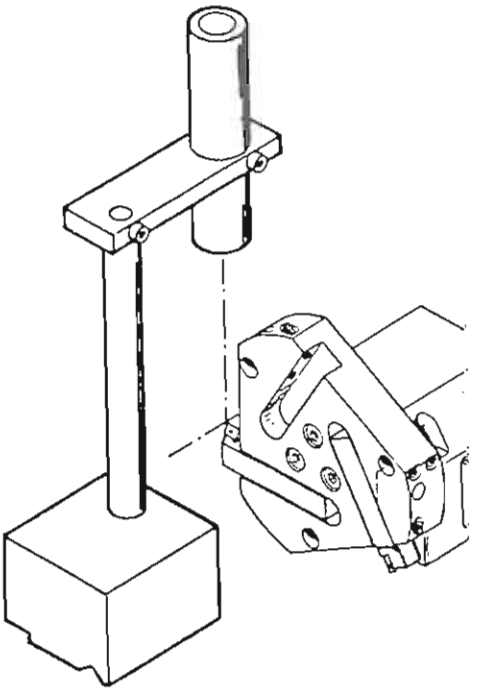

- Swivel following tool into working position.
- Move slides until tool is in cross wire.
- Enter X and Z values (traverse paths)

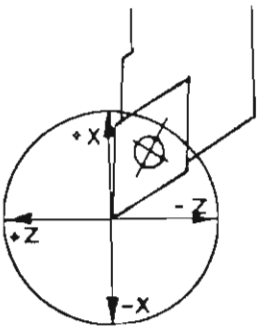

Left hand side tool
in cross wire

Example: left hand side tool

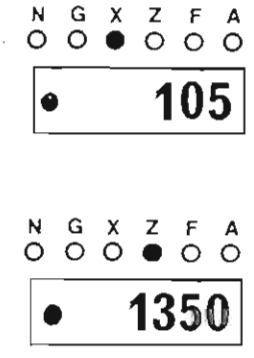

WERKZEUGBLATT

Werkzeug	Position im Werkzeugrevolver	X-Wert	Z-Wert
Right Hand Side Tool	1	0	0
Left Hand Side Tool	3	- 105	-1350

In this way all further tools can be determined. The values of the traverse movements are put into the tool chart so that they are available when programming.

Reflected Images Seen Through the Pre-Setting Device

Right hand side tool

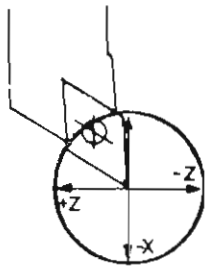

Left hand side tool

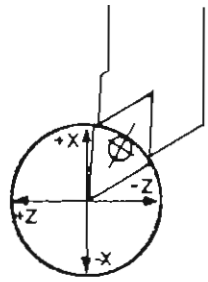

Neutral side tool

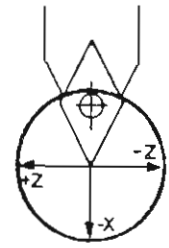

Threading tool outside

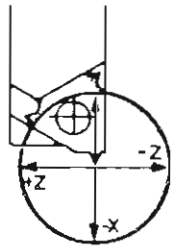

Parting-off tool

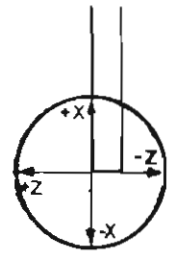

Twist drill
Centering drill

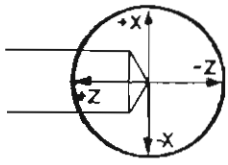

Threading tool inside

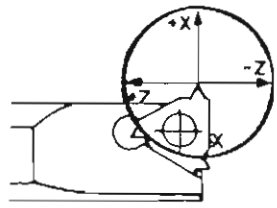

Boring tool inside

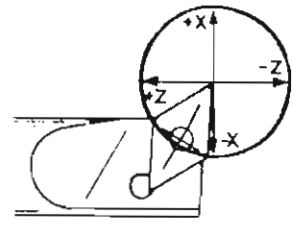

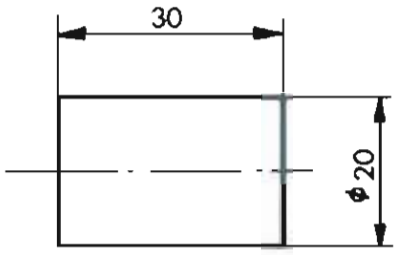

Example:

Workpiece drawing

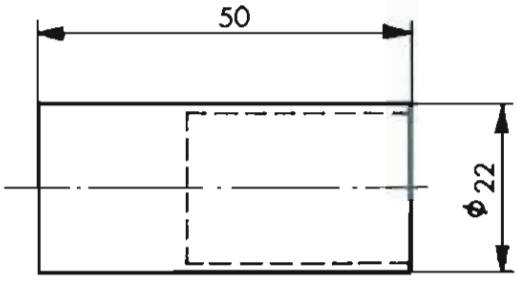

Workpiece raw material

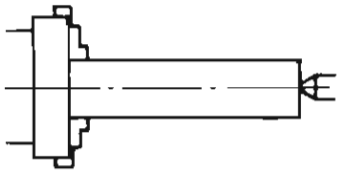

Clamping sketch

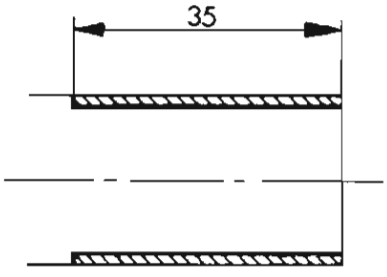

Procedure

1. Determine steps of operation

1.1. Turning off with right hand side tool to dia. 2o mm, length 35 mm.

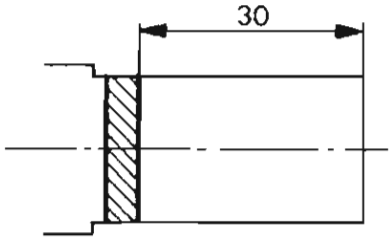

1.2. Parting-off to a length of 3o mm using parting-off tool.

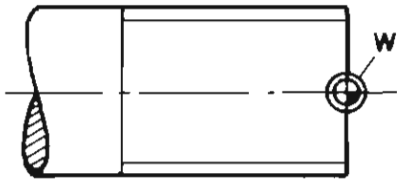

2. Programming: absolute

3. Determination of workpiece zero point

As on drawing.

4. Mount right hand side tool and parting-off tool at center height.

5. Adjust optical pre-setting device at center line.

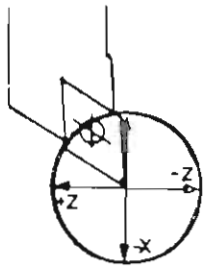

6. Move right hand side tool into cross wire, set digital read-out for X and Z to zero.

7. Swivel turret, move parting-off tool into cross wire; enter X and Z values into tool chart.

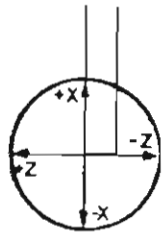

TOOL CHART

Tool	Position in turret	X-value	Z-value
R.H. Tool	1	0	0
Cutting off Tool	3	200	1352

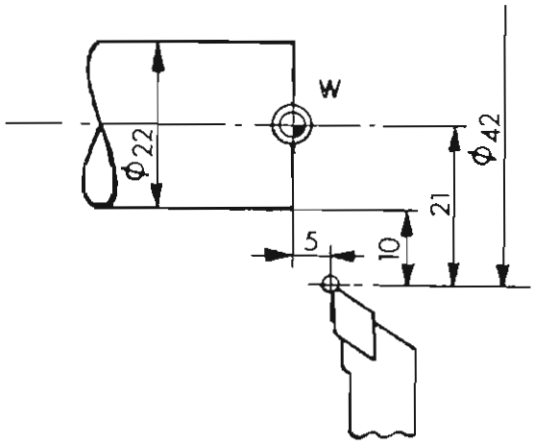

8. Determine point of program start, swivel in right hand side tool.

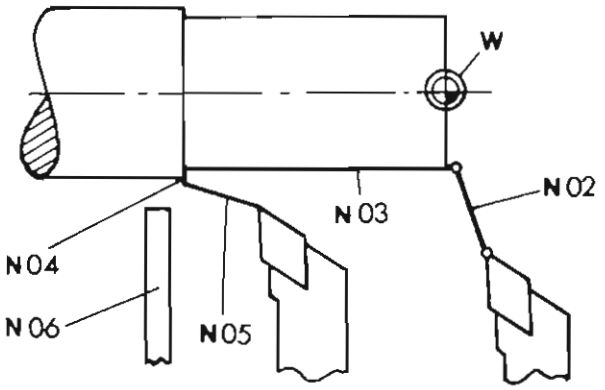

9. Set up program

N	G	X	Z	T
00	92	4200	500	
01	26	0	0	0
02	00	2000	100	
03	01	2000	-3500	100
04	01	2200	-3500	100
05	00	4200	500	
06	26	+200	1352	2
07	00	2200	-3000	
08	01	0	-3000	30
09	01	2200	-3000	
10	26	0	0	4
11	00	4200	500	
12	22			

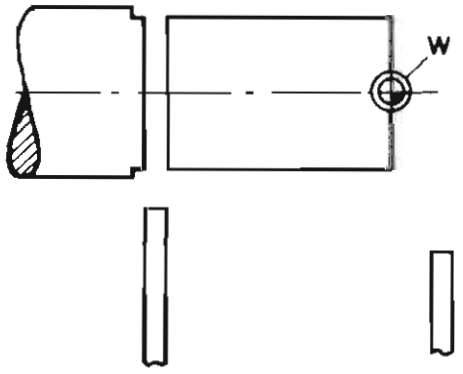

10. Mount workpiece:
Put in program, switch on main spindle drive, start program.

Program starting point

The program starting point should be selected such that the workpiece can easily be mounted and dismounted.

Moving to the Program Starting Point

Possibility 1

Scratching system:

Since the reference tool is already adjusted at center line, a scratching of the workpiece outside is not necessary. Only the face side has to be scratched.

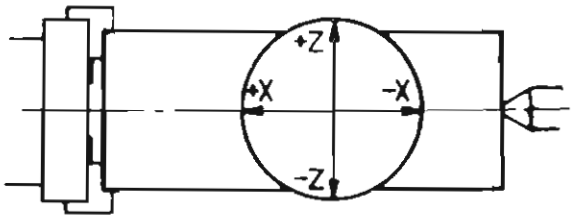

Possibility 2

In many cases the length of the workpiece is known. By means of a ruler the pre-setting device can be positioned such that the cross wire is in line with the workpiece length. In this case no scratching is necessary.

The starting point is approached from the position of the tool in the cross wire.

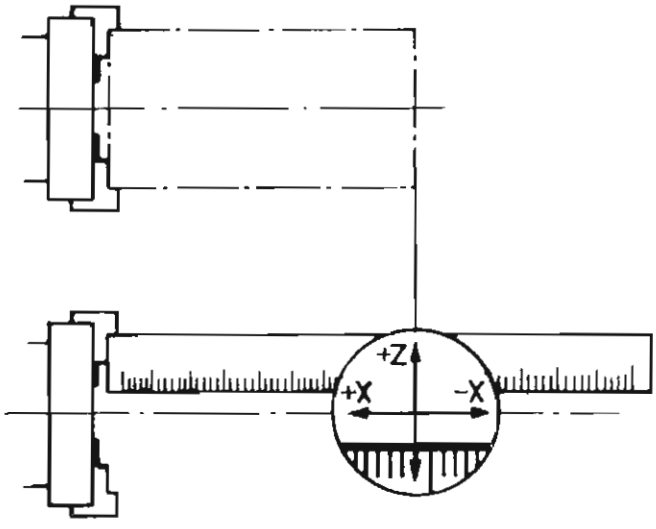

Possible Collisions using the Automatic Turret Toolholder

To take into account the possibilities of collisions is very important when programming the automatic turret toolholder.

Possibilities of Collisions:

- Collision of tools with workpiece (during machining and swivelling process)
- Collisions with chuck:
  + Collision with jaws extended
  + With headstock (drill 12 mm)

The overhead slides 1o.1a - 1o.5 serve to take into account the possibilities of collision in connection with the automatic turret toolholder.

Possibilities to find out about Collisions

1. Dry run

A dry run shows collisions which may occur.
The program has to be stopped, rewritten, tool positions have to be changed.
It is useful to avoid possible collisions already in advance, i.e. when writing the program.

2. 3-D (three-dimensional) view of tool positions using slides 10.1a – 10.5 (projection sheets)

- Cut out the shapes of slide 1o.5 and place them on the contours of the resp. slides.
- Use, according to the mounted chuck, slide 1o.1a or 1o.1b.
  1o.1a = Short chuck
  1o.1b = Longer chuck

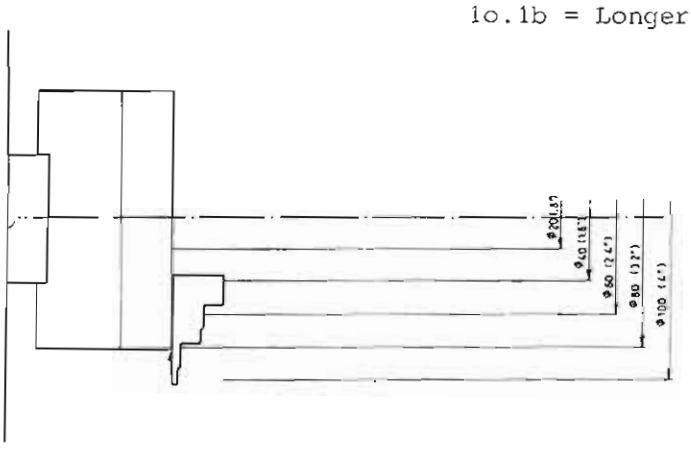

2.1. You know diameter of the raw material:

Place (use sticker) the jaws accordingly on slide 1o.1a or 1o.1b.

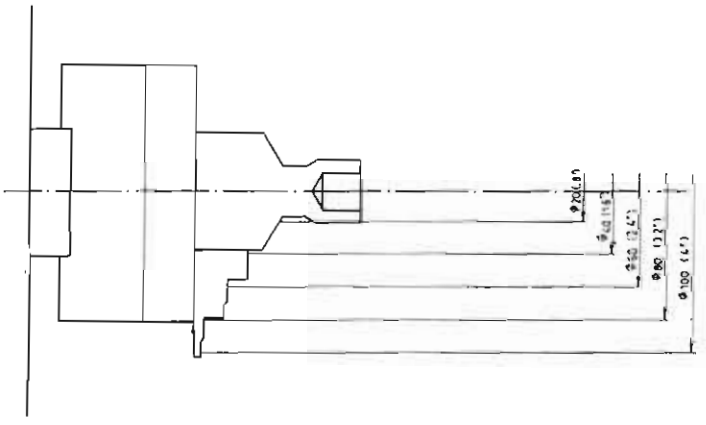

2.2. Place (use sticker) the drawing with the final shape (scale 1:1) on the slide.

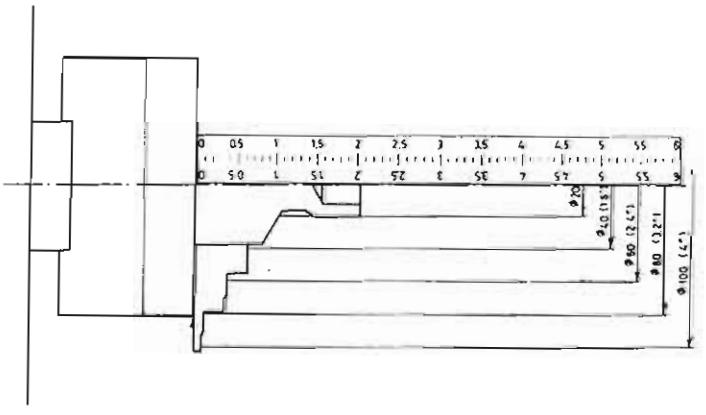

2.3. Place the Z-ruler (inch or metric) on the slide, in order to get a better orientation in case you use the turret toolholder.

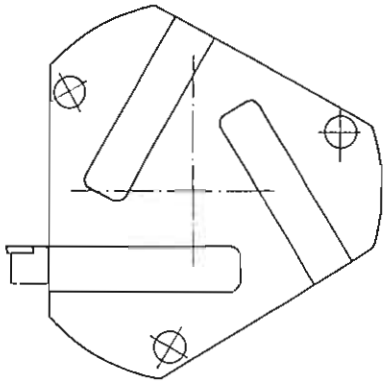

2.4. Place the resp. tools on slide 1o.2 and 1o.4.

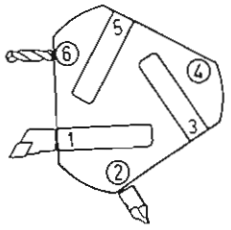

2.5. On slide 1o.4 the tools are to be placed for your understanding and better orientation.

2.6. Simulation of working process:

2.6.1. Centering
2.6.2. Drilling

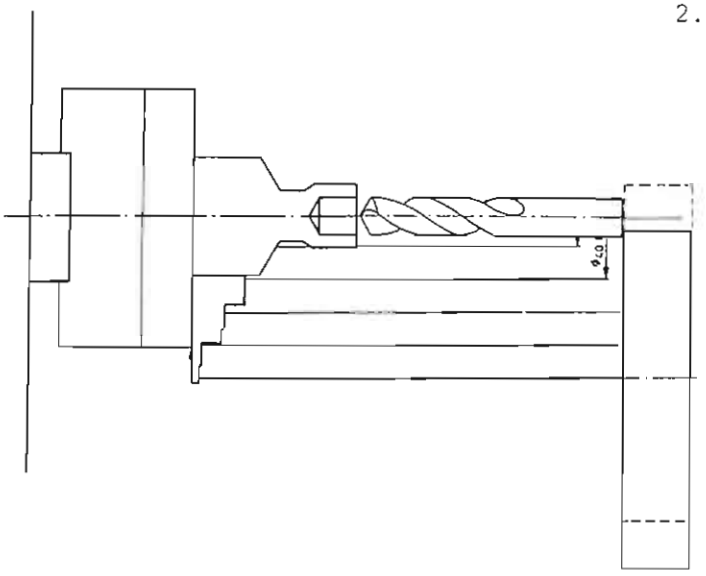

No collision to be expected.

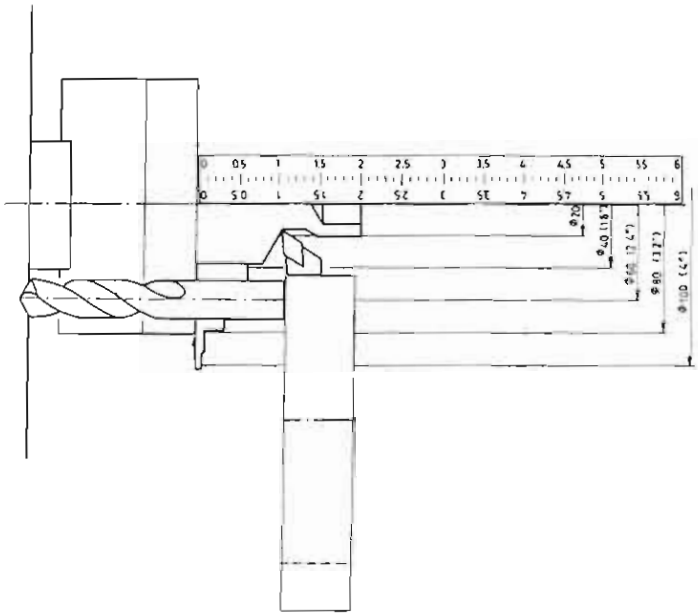

2.6.3. Turning with the right hand side tool:

a) Seen from top view the drill seems to collide with the chuck. As the right hand side tool and the drill are not in the same plane, you have to check the situation applying another view.

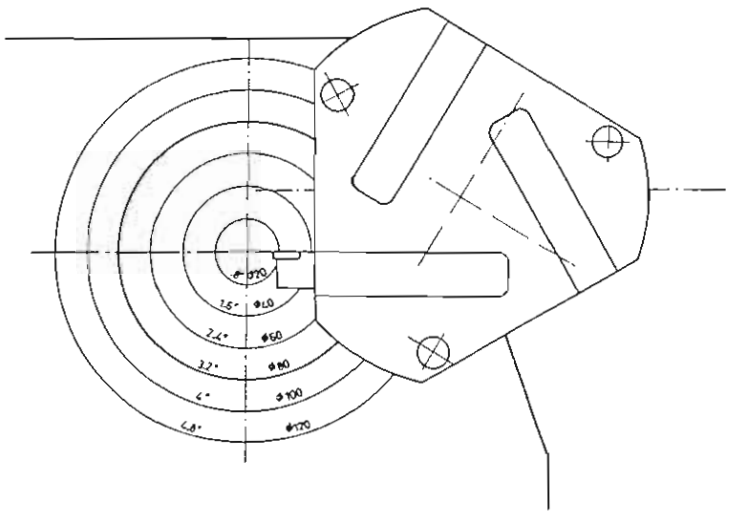

b) The front view:
If the right hand side tool is moved to dia. 18 mm, the drill in position 6 collides with the swing of the extended jaws (dia. 1o4 mm)

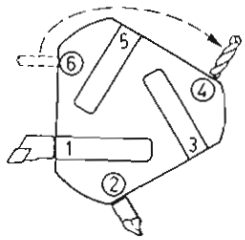

Therefore mount spiral drill in position 4.

NO COLLISION!

Applying this method all types of collisions can be seen in advance. The swivelling of the turret toolholder can be monitored and possible crashes can be avoided.

Some tips

- The change from absolute to incremental programming often causes a mixing up and confusion. Use the graph paper with the coordinate system.

- It seems to be easier to start with incremental programming. Once the preparatory functions G00/G01/G02/G03/G33/G78/G84 are known, both systems should be used.
  For absolute programming the same examples can be used as with incremental programming.

Presetting of tools
Collecting the tool data

1. Quick-change toolpost

1.1. Preadjusting tools with mechanical presetting device

The student identifies the different positions of the tools easily.

With tools preadjusted it is easier to control the programs in group instruction. The student can easily calculate the offset data as they are not given in two decimals (three inch).

Tool data calculation with G26

In the beginning the student should calculate the tool offset data because he will get a better understanding, how the computer is calculating in combination with G26.

1.2. Collecting the tool data with the optical presetting device

Tools can be mounted in any position. Calculation without using G26 is difficult because the increments will be in hundredth of mm (thousandth of inch)

2. Automatic turret toolholder

2.1. Preadjusting tools with the mechanical setting gauge

It cannot be practiced because tool bits could brake if they are not positioned exactly in the grooves.

2.2. Collecting the tool data by scratching or measuring on the toolholder

Scratching

Possible, but complicated and is not very exact.

Measuring on the toolholder

Difficult and not very exact.

Corrections of tool data are necessary in both cases.

It is possible that the tools are clamped in any position. By scratching a reference point at the workpiece, the tool data can be collected and programmed (G26). Difficulties arise with the inside turning tools.
If tool data are collected with these methods, the first workpiece has to be measured and the tool data must be corrected according to the measuring results.

2.3. Collecting the tool data with the optical tool presetting device

This method is highly recommended. Tool data can be collected exactly and quickly.

PROGRAMMBLATT EMCO COMPACT 5 CNC

N	G	X	Z	F	Bemerkungen	S [1/min]

Inch-Metric Conversions

+ Measure of length
+ Feed size
+ Feed speed
+ Cutting speed

Length Measurement

Inch system

Basic measures of length are inch and feet.

Parts of inch are written both as fractional and decimal inch in technical drawings.

Metric system

Basic unit of measures of length is the m.

In technical drawings all measures of length are shown in mm.
1 mm = o.oo1 m
Parts of mm are written as decimal mm only.

Inch	mm
10"	254 mm
1"	25,4 mm
.1"	2,54 mm
.o1"	o,254 mm
.oo1"	o,o254 mm
.ooo1"	o,oo254 mm

Conversion

Inch to mm

Multiply inch dimension with 25.4

Example:

1.63" = 1.63" x 25.4 = 41.4o2 mm.

Conversion

mm to inch

+ Divide mm by 25.4
  Example: 41.4o2 mm : 25.4 = 1.63"

+ Multiply inch with .o4 (rounded factor)
  Example: 1 mm x .o4 = .o4"

mm	Inch (exactly)	Inch (rounded)
1ooo (1 m)	39.37oo7	4o
1oo	3.937oo	4
1o	.3937o	.4
1	.o3937	.o4
o,1	.ooo393	.ooo4
o,o1	.oooo39	.oooo4

Feed Size (F_1)

Inch

Feed size is given in inch per revolution.

$F_1 = \frac{\text{inch}}{\text{rev.}}$

Metric

Feed size is given in mm per revolution.

$F_1 = \frac{\text{mm}}{\text{rev.}}$

Conversion

Inch/Rev. —— to —— mm/rev.

Multiply with factor 25.4

$$0.001\left[\frac{\text{inch}}{\text{rev.}}\right] \times \boxed{25.4} = 0{,}0254\left[\frac{\text{mm}}{\text{rev.}}\right]$$

---

mm/rev. —— to —— inch/rev.

Multiply with factor .04

$$.0254\left[\frac{\text{mm}}{\text{rev.}}\right] \times \boxed{.04} = 0.001''\left[\frac{\text{inch}}{\text{rev.}}\right]$$

Feed Speed (F_2)

Inch	Metric
Feed speed is given in inch per minute	Feed speed is given in mm per minute

Conversions with factor 25.4 resp. o,o4

4 inch/mm x $\boxed{25.4}$ = 1oo mm/min.

1oo mm/min x $\boxed{o,o4}$ = 4 inch/min.

Calculation of Feed Speed (F_2)
(inch)

$$F_2 \left[\frac{\text{Inch}}{\text{min.}}\right] = S\left[\text{rpm}\right] \times F_1 \left[\frac{\text{mm}}{\text{rev.}}\right]$$

Example:

F_1 = .ooo8" per revolution

S = 15oo rpm

F_2 = ?

$F2 = S \times F1 = 15oo \times .ooo8 = 1,2 \frac{\text{inch}}{\text{min.}}$

Cutting Speed (V_s)

(Surface speed)

Inch

In inch practice the cutting speed is given in feed per minute

In short:
SFM (surface speed per minute) or
fpm (feed per minute)

$$V_s = \frac{S \times \pi \times D}{12}$$

V_s = Cutting speed (feed per minute)
S = Spindle speed (rpm)
D = Diameter of workpiece (inch)

Metric

In metric practice the cutting speeds are given in meter per minute

$$V_s = \frac{S \times \pi \times D}{1000}$$

V_s = Cutting speed (meter per minute)
S = Spindle speed (rpm)
D = Diameter of workpiece

Conversion of Cutting Speeds

1. Inch fpm ——— to ——— metric (m/min)

Multiply fpm-value with o,3

8o fpm x $\boxed{o,3}$ = 24 m/min

2. Metric m/min ——— to ——— inch fpm

Multiply m/min-value with $3.\dot{3}$

24 m/min x $\boxed{3.\dot{3}}$ = 8o fpm.

Calculating the Spindle Speed

Inch

$$S = \frac{.12 \times V_s}{\pi \times D}$$

S = Spindle speed (rpm)
V_s = Cutting speed (fpm)
D = Diameter (inch)
π = 3.14

Metric

$$S = \frac{1000 \times V_s}{\pi \times D}$$

S = Spindle speed (rpm)
V_s = Cutting speed (m/min)
D = Diameter (mm)
π = 3,14