Hardware-Efficient Three-Input Fuzzy MPPT for PV Battery Charger ICs

Mehmet Gök, Kemal Ozanoglu, and Günhan Dündar
Department of Electrical and Electronics Engineering, Bogazici University, Istanbul, Türkiye

***Abstract*—Maximizing power extraction from photovoltaic (PV) arrays under dynamically changing environmental conditions remains a critical challenge, particularly in PV battery charging applications where conventional Maximum Power Point Tracking (MPPT) algorithms often suffer from slow transient response and steady-state oscillations. To address these limitations, this paper presents an ASIC-oriented fuzzy logic controller modeled in MATLAB/Simulink that utilizes three inputs: change in PV voltage (ΔV_{pv}), change in output current (ΔI_{out}), and absolute PV voltage (V_{pv}), while eliminating complex multipliers and dividers through the use of look-up tables and bitwise shift operations for hardware-efficient implementation. Simulation results demonstrate over 99% tracking efficiency and approximately 95% power conversion efficiency, with fast transient recovery under sudden irradiance changes, highlighting the proposed method as a low-complexity and highly suitable solution for integrated PV power management ICs.**

***Index Terms*—Fuzzy Logic Control, Maximum Power Point Tracking (MPPT), Photovoltaic (PV) Systems, Multi-Input Fuzzy Inference, Battery Charging, MPPT Optimization**

I. Introduction

The integration of renewable energy sources, particularly photovoltaic (PV) systems, is critical for sustainable power generation. However, PV output is inherently non-linear and strongly dependent on environmental conditions such as solar irradiance and temperature.

To maximize energy extraction under these varying conditions, Maximum Power Point Tracking (MPPT) algorithms are employed to ensure optimal power transfer, thereby improving efficiency and reducing energy loss in PV battery charging systems.

Conventional MPPT methods such as Perturb and Observe (P&O) and Incremental Conductance (IC) are widely used [8]. The IC method tracks the MPP by evaluating the slope of the power-voltage curve, providing a balance between tracking speed and steady-state accuracy. To handle rapidly changing conditions, these methods are often enhanced with adaptive step sizes or intelligent techniques such as neural networks and fuzzy logic [6].

In this work, we present an ASIC-oriented, three-input fuzzy logic MPPT controller validated in MATLAB/Simulink. The proposed approach achieves fast and accurate tracking by utilizing the change in PV voltage, change in output current, and absolute PV voltage. To enable future low-cost hardware implementation, a hardware-friendly mapping is proposed in which multipliers and dividers can be replaced with look-up tables and bitwise shift operations. The overall system overview is illustrated in Figure 1.

The main contributions of this work can be summarized as follows: This paper proposes a three-input fuzzy logic MPPT controller that utilizes both dynamic (ΔV, ΔI) and absolute (V) PV parameters to improve tracking performance. A reduced fuzzy rule-base is developed to decrease computational complexity while maintaining accuracy. In addition, a hardware-efficient digital implementation is introduced for ASIC realization by eliminating multipliers and dividers through look-up tables and shift-based approximations. Unlike many existing approaches that rely on derived quantities, the proposed method uses only fundamental electrical parameters, resulting in a simpler and more implementation-friendly structure.

The paper is organized as follows: Section II describes the PV model, Section III details the system architecture, Section IV presents the results, and Section V concludes the paper.

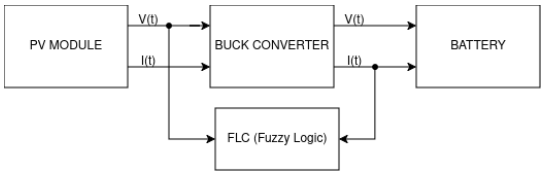

Fig. 1. System diagram

II. Photovoltaic Panel Model

The PV model's example I-V & Power characteristics, based on De Soto et al. [1], is shown in Figure 2. Despite irradiance variations, the MPP voltage remains confined to a narrow range but constantly shifts, requiring active tracking. The controller adjusts the converter's duty cycle to modulate the PV panel impedance. For instance, when both voltage and current increase, duty cycle reduction brings the operating point closer to the new MPP; conversely, when voltage increases but current decreases, duty cycle increase steers the system back toward the MPP. The inference mechanism details are provided in Section III-B.

III. System Architecture

MATLAB/Simulink is chosen as the simulation environment for implementing and validating the proposed system (Figure 3).

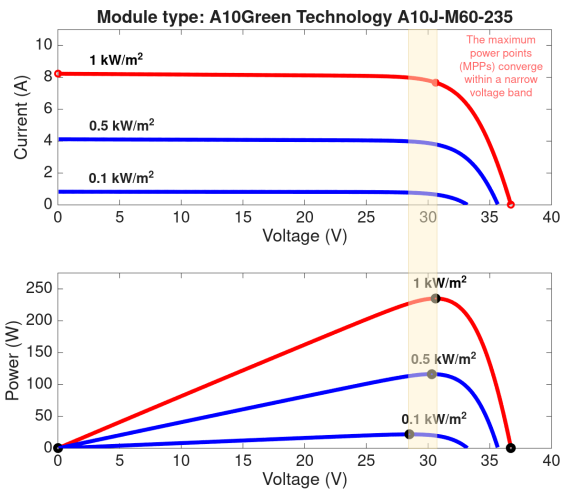

Fig. 2. I-V and power characteristics of the photovoltaic panel under various irradiance conditions.

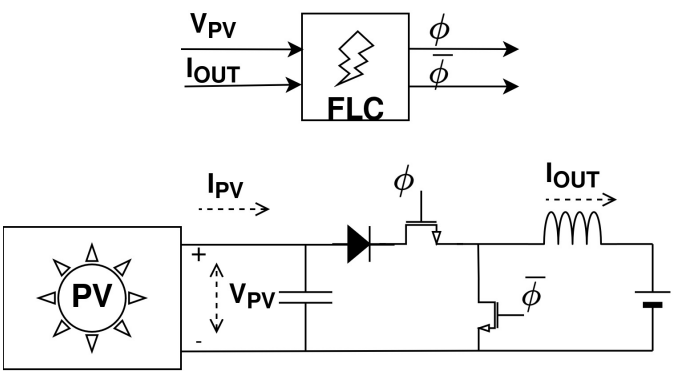

Fig. 3. Simulink model overview of the proposed fuzzy logic-based MPPT system for PV battery charger.

A. Buck Converter

1) Buck Converter Specifications: The buck converter specifications, derived from [2]–[4] and optimized for efficient power conversion, are presented in Table I. Parasitics of passive components are excluded in this system-level model.

TABLE I
BUCK CONVERTER SPECIFICATIONS

Parameter	Symbol	Value
Input Voltage (MPP)	V_{in}	30.6 V
Output Voltage (Battery)	V_{out}	14.4 V
Switching Frequency	f_{sw}	500 kHz
Sampling Frequency	f_{sample}	20 kHz
Inductance	L	2.6 μH
Input Capacitance	C_{in}	47 μF
Parasitic Resistance of Switch	R_{sw}	10 mΩ
Diode Forward Voltage	V_f	0.5 V

B. Fuzzy Logic Controller

The fuzzy logic controller operates in three phases: Sampling & Fuzzification, Inference, and Defuzzification & Duty Cycle Adjustment. The controller takes the three input parameters (ΔV_{pv}, ΔI_{out}, and V_{pv}) and produces the duty cycle change (ΔD) as output. The diagram is shown in Figure 4.

1) Sampling & Fuzzification: In this phase, the three input parameters are sampled at the defined sampling frequency ($f_{sample} = 20$ kHz) using a 10-bit ADC for analog-to-digital converter. The first two parameters (ΔV_{pv} and ΔI_{out}) are converted to digital form and their differences with previous sampled values are computed. The third parameter (V_{pv}) is taken directly without computing differences. These digital codes are then given to the inference part.

The degree of membership is determined by mapping the crisp digital input onto the corresponding linear segment of the membership function. The membership value, which ranges from 0 to 255, is extracted using linear interpolation between the defined vertices of the fuzzy set. To avoid complex division operations and maintain an ASIC-friendly architecture, the denominator, originally 2046 based on the range of 10-bit differences (±1023), is approximated as 2^{11} (2048). This power-of-two approximation enables the use of arithmetic right shifts instead of hardware-intensive division For future hardware implementation, this enables the calculation to be simplified into a highly efficient bitwise right-shift ($\gg$) and addition:

$$b = \frac{(a + 1023) \times 256}{2046} \approx (a \gg 3) + 128 \tag{1}$$

where a represents the crisp digital input and b represents the resulting 8-bit membership value.

2) Inference: The inference phase evaluates a set of IF-THEN rules based on three linguistic input variables: ΔV_{pv}, ΔI_{out}, and V_{pv}. The system employs the `min` operator for the logical AND operation to determine the firing strength of each rule. While a conventional three-input fuzzy system typically requires 27 rules ($3 \times 3 \times 3$), the proposed architecture reduces this to only 11 rules to minimize computational complexity.

As summarized in Table II, the absolute PV voltage (V_{pv}) acts as a supervisory parameter. When V_{pv} is outside the target range (categorized as *Low* or *High*), boundary-override rules dominate to rapidly return the system to a safe operating point. Once within the *Optimal* region, the controller evaluates the remaining 9 rules.

TABLE II
UNIFIED FUZZY LOGIC RULES FOR DUTY CYCLE ADJUSTMENT

V_{pv} Region	ΔI_{out} \ ΔV_{pv}	Negative	Zero	Positive
Low	—	Big Decrease	Big Decrease	Big Decrease
High	—	Big Increase	Big Increase	Big Increase
Optimal	**Negative**	Decrease	Hold	Increase
	Zero	Hold	Hold	Hold
	Positive	Increase	Hold	Decrease

3) Defuzzification & Duty Cycle Adjustment: In this final phase, a Sugeno-type weighted average is used to defuzzify

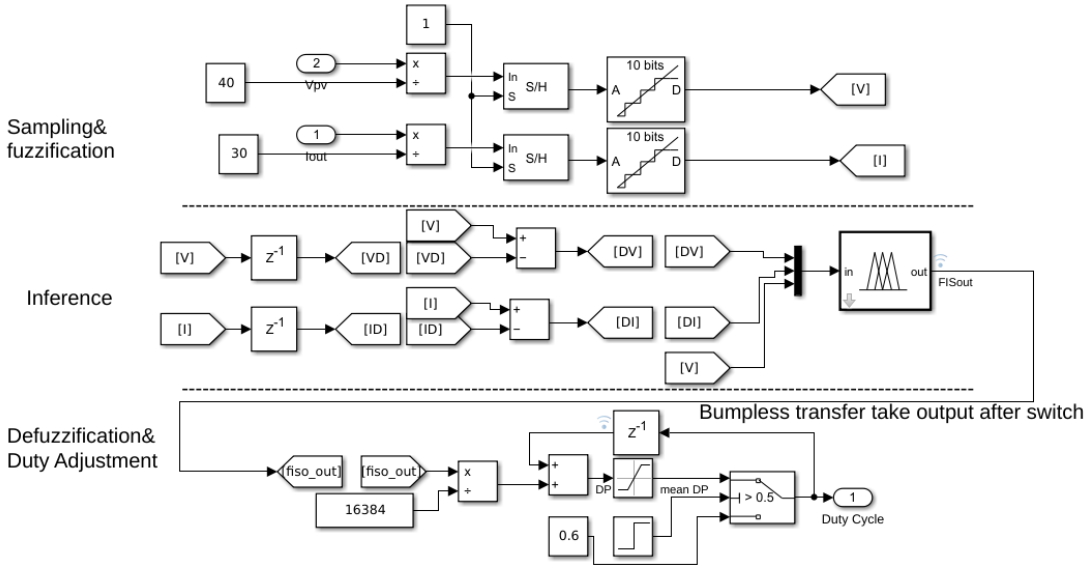

Fig. 4. Fuzzy logic controller block diagram showing the three phases of operation.

the output of the inference process into a crisp value, ΔD, according to the following equation:

$$\Delta D = \frac{\sum_{i=1}^{n} w_i \cdot c_i}{\sum_{i=1}^{n} w_i} \tag{2}$$

where n is the total number of active rules, w_i represents the firing strength of the i-th rule obtained using the `min` operator, and c_i is the constant crisp output coefficient defined for that rule. To optimize the design for ASIC implementation by heavily reducing the digital hardware footprint, complex arithmetic operations are replaced with hardware-efficient approximations. Specifically, the multiplication $(w_i \cdot c_i)$ is approximated using a look-up table for conditional 1-bit right shifts. Furthermore, to eliminate the need for a hardware-intensive digital divider, the denominator summation (which accommodates up to 7 active rules) is mapped to the nearest power of two. This converts the division into an efficient bitwise right-shift operation (by 0, 1, 2, or 3 bits).

While this power-of-two approximation introduces a quantization error in the crisp output, its impact is mitigated at the closed-loop control level rather than through static error compensation. The final fuzzy output is scaled down by a large constant factor, which effectively reduces the controller gain and the corresponding step size. In the context of optimal point tracking, this reduced step size acts as a low-pass filter for the approximation noise, ensuring a slow but stable settling behavior and significantly suppressing steady-state chattering around the MPP. Since fast transient responses under large error conditions are handled separately by dedicated safety rules, this reduced gain near the optimal region provides high stability without compromising the overall dynamic tracking performance. The system employs a bumpless transfer mechanism—a control technique that ensures a smooth, uninterrupted transition between operating modes without inducing output spikes—to prevent abrupt adjustments to the converter's operation.

IV. Simulation and Results

The performance of the proposed fuzzy logic-based MPPT controller was validated through a comprehensive simulation conducted in MATLAB/Simulink, with the overall results depicted in Figure 5(a). The total simulation time was 0.6 seconds, designed to demonstrate the controller's performance during both steady-state and transient conditions. The converter efficiency, calculated as P_{out}/P_{in}, was maintained at approximately 95% throughout the simulation. The PV efficiency, defined as P_{in}/P_{vmax}, is the primary metric for evaluating the MPPT algorithm's effectiveness.

The simulation is divided into three distinct phases, with the critical transient moments highlighted in detail in figures 5(b) and (c).

1) **Initial Stabilization (0s - 0.2s):** For the first 0.2 seconds, the system operates with a fixed duty cycle. The fuzzy logic controller is inactive, allowing the converter to stabilize without active MPPT control, as seen in the first section of Figure 5(a).
2) **Fuzzy Controller Activation (0.2s):** At 0.2 seconds, the fuzzy logic MPPT controller is enabled. Figure 5(b) shows a zoomed-in view of this event. The controller rapidly adjusts the duty cycle to find the maximum power point, achieving over 99% PV efficiency in just 13.4 milliseconds, which highlights its fast convergence speed.
3) **Transient Response (0.4s):** At 0.4 seconds, a step change simulates a sudden decrease in solar irradiance. Figure 5(c) details this transient. Despite the disturbance causing a momentary dip in PV efficiency to $\sim 93\%$, the fuzzy controller responds swiftly, restoring the efficiency to over 99% in approximately 1 millisecond.

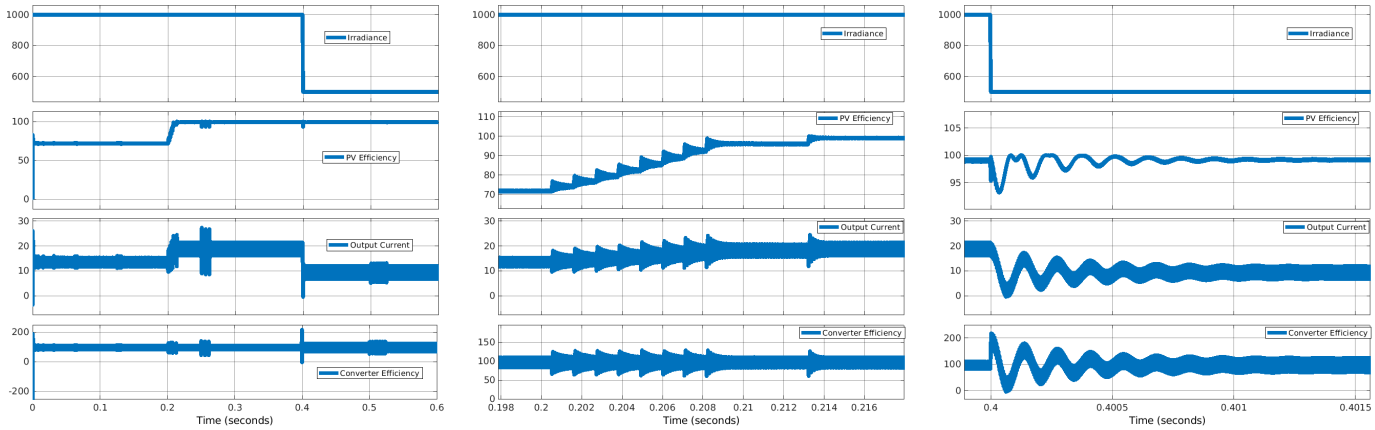

(a) Overall simulation results showing the three performance phases.

(b) Zoomed-in view of FLC(Fuzzy Logic Controller) activation at 0.2s.

(c) Zoomed-in view of transient response at 0.4s.

Fig. 5. MATLAB simulation results. (a) Overall performance across three phases. (b) Controller activation detail. (c) Transient response detail.

These results confirm the robustness and high performance of the fuzzy logic controller, showcasing its ability to quickly track the MPP and maintain high efficiency, even under rapidly changing conditions.

Table III summarizes the steady-state performance of the proposed system under the evaluated varying irradiance conditions. The results demonstrate that the fuzzy logic controller maintains exceptional PV tracking efficiency while the buck converter sustains high power conversion efficiency across varying environmental states. Notably, the PV efficiency and buck converter efficiency remain around 99% and 95%, respectively, up until the converter enters Discontinuous Conduction Mode (DCM) at very low irradiance levels, which explains the efficiency drop observed at 200 W/m^2.

TABLE III
STEADY-STATE PERFORMANCE METRICS

Irradiance (W/m^2)	**1000**	**500**	**200**
PV Efficiency (%)	99.3	99.1	99.0
Buck Converter Efficiency (%)	95.2	94.9	78.8

V. CONCLUSIONS

This paper presents an ASIC-oriented, three-input fuzzy logic MPPT controller for PV battery chargers that evaluates changes in PV voltage, output current, and absolute PV voltage to achieve fast and accurate tracking. A key contribution is the proposed hardware-efficient architecture, where complex multipliers and dividers are avoided through the use of look-up tables and bitwise shift operations, significantly reducing implementation complexity for low-cost IC design.

Simulation results demonstrate over 99% PV tracking efficiency and validate the effectiveness of the proposed approach compared to a baseline 2-input Mamdani-based design (Table IV). Although the proposed method employs a reduced rule set, it achieves improved tracking accuracy and avoids local minima trapping, while also reducing hardware complexity and area. The three-input structure maintains high steady-state stability at 500 kHz switching frequency, providing an effective trade-off between tracking performance and implementation efficiency.

TABLE IV
COMPARISON BETWEEN BASELINE 2-INPUT AND PROPOSED 3-INPUT FLC

Parameter	**2-Input (Baseline)**	**3-Input (Proposed)**
FLC Type	Mamdani	Sugeno
PV Tracking Efficiency	$\approx 97\%$	$> 99\%$
Switching Frequency	10 kHz	500 kHz
Settling Time	> 50 ms	< 15 ms
Rule Complexity	Higher	Reduced
IC Implementation	Multiplier-based	LUT & Bitwise Shifts

Future work will focus on the complete physical IC implementation and experimental hardware validation. The developed MATLAB/Simulink models are publicly available at [9].

REFERENCES

[1] W. De Soto et al., "PV array performance model," *Solar Energy*, vol. 80, no. 1, pp. 78–88, 2006.

[2] R. Erickson et al., *Fundamentals of Power Electronics*, 2nd ed. Springer, 2001.

[3] M. H. Rashid, *Power Electronics Handbook*, 4th ed. Butterworth-Heinemann, 2017.

[4] Texas Instruments, "Buck Converter Calculation," App. Rep. SLVA477B, 2015.

[5] Z. Dalala et al., "Novel PV MPPT system," *IEEE Trans. Sustain. Energy*, vol. 7, no. 3, pp. 1101–1115, 2016.

[6] T. S. Ubale et al., "Fuzzy logic MPPT review," in *Proc. IEEE ICETECH*, 2016, pp. 1–6.

[7] L. A. Zadeh, "Fuzzy sets," *Inf. Control*, vol. 8, pp. 338–353, 1965.

[8] D. P. Hohm et al., "MPPT algorithms study," *Prog. Photovolt.*, vol. 11, no. 1, pp. 47–62, 2003.

[9] M. Gök, "3-input fuzzy MPPT," GitHub, 2024. [Online]. https://github.com/mehmetgok1/MATLAB