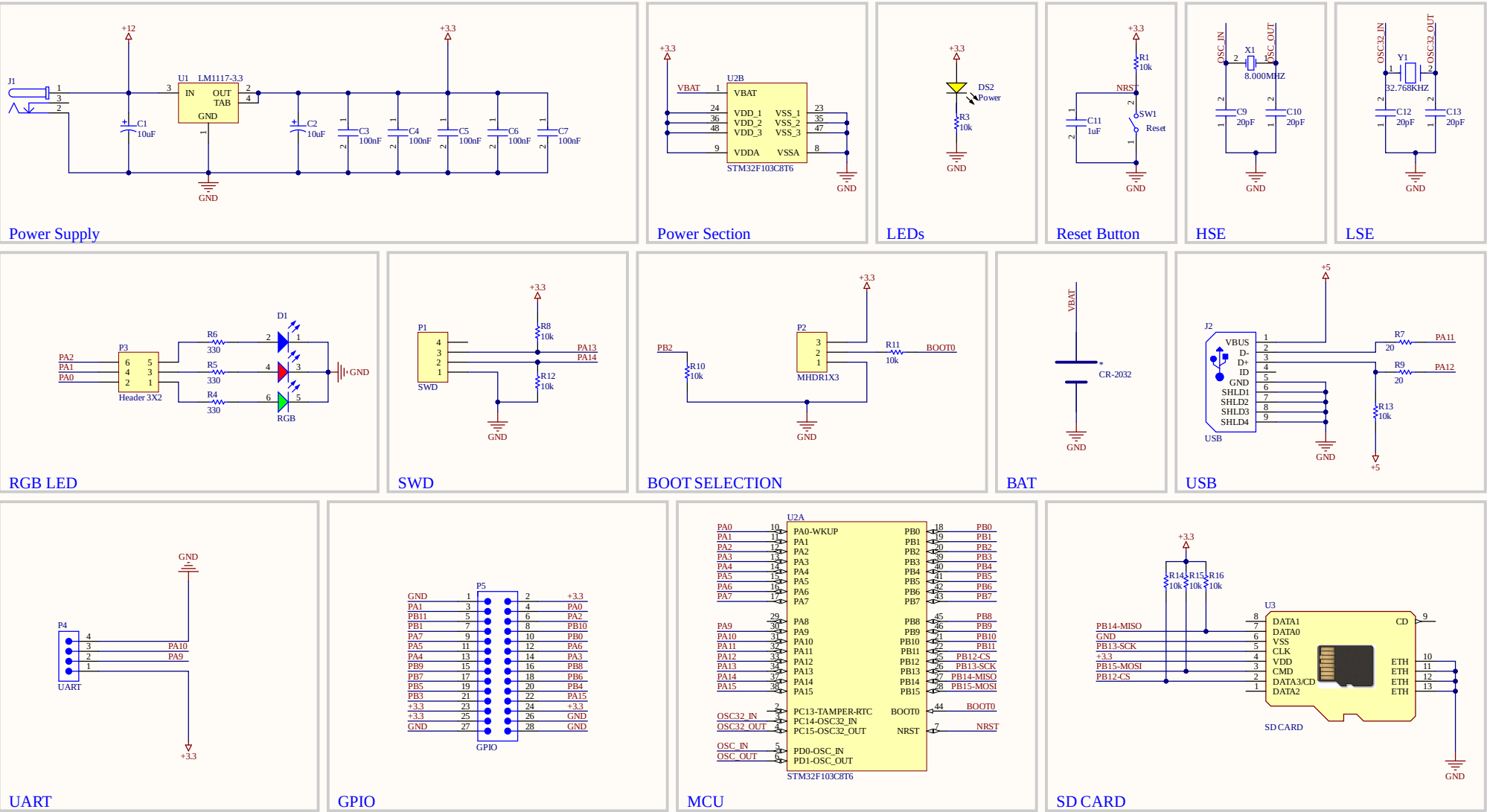

Title STM32 Development Board		
Size A3	Number 1	Revision 1
Date: 7/29/2025		Sheet of
File: C:\Users\..\devBoard.SchDoc		Drawn By: Mehran Ahmadi

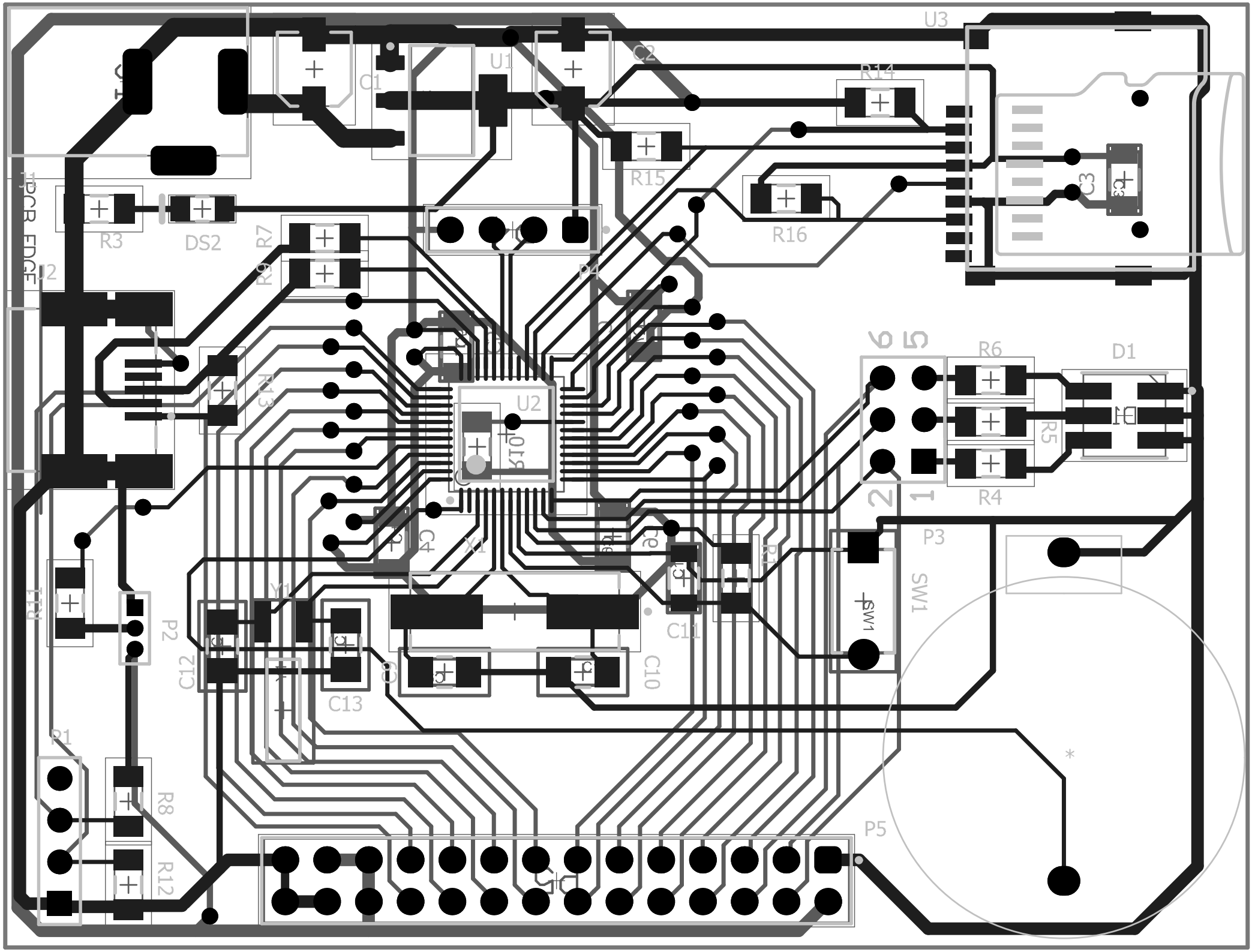
PCB EDGE
U3
U1
C1
C2
R14
R15
R16
C3
R3
DS2
R7
R9
P4
U2
R10
R13
R6
D1
R5
R4
P3
SW1
X1
C4
C9
C8
C11
C10
C12
C13
Y1
R11
P2
P1
R8
R12
P5

Board Stack Report