Introduction to Bioinformatics

Comprehensive Bioinformatics Analysis of a Gene: From Sequence to Structure

PROJECT REPORT

Table of Contents

Title Page.....1
Contents.....2
Introduction.....3
Gene Overview.....3
Methodology.....4
Findings & Results.....4
Annotated gene sequence with BLAST result.....4
Variant analysis report with predicted impacts.....6
Phylogenetic tree and interpretation.....7
RNA structure visualization and functional insights.....8
Protein model with structural annotations.....9
Structural features and their potential functional relevance.....10
Functional Analysis.....10
Conclusion.....12
References.....12

Project Report:

Comprehensive Bioinformatics Analysis of a Gene: From Sequence to Structure

▪ Introduction

The **MTOR (Mechanistic Target of Rapamycin)** gene, encodes a serine/threonine protein kinase that serves as a key regulator in cellular processes. It plays a fundamental role in cellular growth, proliferation, motility and survival, making it indispensable for maintaining cellular homeostasis. This study undertakes a **comprehensive bioinformatics analysis of the MTOR gene**, including sequence annotation, structural prediction, and functional characterization. Advanced computational tools are employed to investigate the relationship between the gene's sequence, structure, and function, with a particular focus on its implications for health and disease.

Gene, Function, and Disease

Gene Overview

Gene Name: **Gene ID**:

Official Full Name: Mechanistic target of rapamycin kinase **Also known as :**SKS; FRAP; FRAP1; FRAP2; RAFT1; RAPT1

Function

The MTOR Gene acts as a central hub in the **mTOR signaling pathway**.The protein encoded by this gene belongs to a family of phosphatidylinositol kinase-related kinases. These kinases mediate cellular responses to stresses such as DNA damage and nutrient deprivation. This kinase is a component of two distinct complexes, **mTORC1**, which controls protein synthesis, cell growth and proliferation, and **mTORC2**, which is a regulator of the actin cytoskeleton, and promotes cell survival and cell cycle progression. This protein acts as the target for the cell-cycle arrest and immunosuppressive effects of the **FKBP12-rapamycin complex**. Inhibitors of mTOR are used in organ transplants as immunosuppressants, and are being evaluated for their therapeutic potential in SARS-CoV-2 infections. Mutations in this gene are associated with Smith-Kingsmore syndrome and somatic focal cortical dysplasia type II. The **ANGPTL7** gene is located in an intron of this gene. *[Extracted from Full Report on MTOR from NCBI]*

Associated Diseases

Dysregulation of the MTOR signaling pathway has been strongly associated with various pathological conditions. In oncology, aberrant activation of MTOR is observed in cancers such as breast, prostate, and renal cell carcinoma, where it facilitates uncontrolled cell proliferation and inhibits apoptosis.In metabolic disorders, including diabetes and obesity, MTOR dysregulation disrupts nutrient sensing and metabolic

homeostasis. Furthermore, rare genetic syndromes, such as tuberous sclerosis complex (TSC) and PTEN

hamartoma tumor syndrome, are directly associated with mutations affecting the MTOR pathway, further highlighting its significance in cellular regulation and disease progression. *- Saxton, R. A., & Sabatini, D. M. (2017). mTOR signaling in growth, metabolism, and disease. Cell, 168(6), 960-976.*

▪ Methodology:

A comprehensive bioinformatics approach, using a series of bioinformatics tools and databases was implemented to analyze the MTOR gene, combining sequence retrieval, structural modeling, and functional characterization. The gene sequence and associated metadata were retrieved from **NCBI Gene and Ensembl Genome Browser**, ensuring data accuracy through cross-verification. Homologous sequences were identified using the **Basic Local Alignment Search Tool (BLAST),** which enabled the identification of conserved regions.The **Variant Effect Predictor (VEP)** was utilized to analyze known genetic variants, predicting their functional implications, including potential pathogenicity and disease associations. Subsequently, multiple sequence alignment was performed using **MEGA (Molecular Evolutionary Genetics Analysis)**, and a phylogenetic tree was constructed to elucidate evolutionary relationships and divergence patterns among related species.RNA secondary structure analysis was conducted using **RNAfold,** focusing on the prediction of functional RNA elements such as stem-loops, which are critical for post-transcriptional regulation. For protein structure modeling, **SWISS-MODEL and AlphaFold** were employed to predict the three-dimensional structure of the MTOR protein. Finally, functional correlation analyses were performed using **KEGG and Reactome** databases to link structural insights with biological pathways and disease mechanisms.

This comprehensive methodology ensured thorough analysis of the MTOR gene, integrating sequence, structure, and functional data to provide an understanding of its role in cellular processes and disease.

▪ Findings & Results

i. Annotated gene sequence with BLAST results

Name/Gene ID	Description	Location	Aliases
☐ MTOR ID: 2475	mechanistic target of rapamycin kinase [*Homo sapiens* (human)]	Chromosome 1, NC_000001.11 (11106535..11262551, complement)	FRAP, FRAP1, FRAP2, RAFT1, RAPT1, SKS

Homo sapiens mechanistic target of rapamycin kinase (MTOR), RefSeqGene (LRG_734) on chromosome 1

NCBI Reference Sequence: NG_033239.1

GenBank Graphics

```
>NG_033239.1 Homo sapiens mechanistic target of rapamycin kinase (MTOR), RefSeqGene
(LRG_734) on chromosome 1
TGGGAGGCCGAGGTGGGCAGATCAAGAGGTCAGGAGTTTGAGACCAGCCTGACCAACACGGTGAAACCGT
GTCTCTACTAGAAATACAAAAATTAGCCGGGTATGGTGGCACACACCTATAATCCCAGCTACTCAAAAGG
CTGAGGCACAAGAATTGCTTGAACCTGGGAGGCAGAGGTGGCAGTGAGCTGAGATCCTGCCACTGCACTC
CAGCCTGGGCAACAGAGCGAGACTCTGTCTCAAGAAAAAACAAAACAAACAAACAAACAAACAAACCCAG
CTCAGAATTCCTTGGGGAGATGGATTTGAAGGTCTCCTCCTGTTACAGTAGATAGCTAGTCAGGCATGAG
CAGAGCAGGAGAGGCCCCCACCCCCTAACCCCAGGAATGTCAAGCAACCATTGGGTGATGGTCAGGCAGT
TGTTAAGCTATCTCGCTAAAATAATAATTGATTGCAGCTGGTGCCAGAGAAAGGCAGTCTCCCAAAAGAT
AGAAACACCTGAAACTGGTGATCAGCAGCTTCCCATAAGATCTCAGGAGCTGGGCGAGTAGGCTCAAGCA
TGGGCACTAAGAGGCAAAATCGCAGATGATCACTAACAGGCAAAATCGCCGATGATCTTCCTCTAGGAAC
ACTGGACTGGTAAGGGAAACACATCTTGAGTGAGCATGCCCACAACTCCAGTAAACACACTGCACATGCG
CCCCTACCCAAGTGCTGACAGGCCACCATGCATGTGGACAGCCCACCCCAAGGGAAGAATCAGGGGAGAA
GGGATGCAAGACCCTGGAAGTATGCCAACCCCGAGTCAAGGTCAAACAGCGCACTTGATCTCTCAGGTCA
ACTGCTTGGTTCTCTTCCAAGTGTCCTTTACTTCCTTTCATTCCTGCTCTAAAGCTCTTTAATAAACTTC
GCTCCTGTTCTAAAACTTGCCTCAGTCTCTCACTCTGCCTTATGCCCCTCAGTTGAATTCTTTCTTCTGA
GGAGGCAAGAACTGAGCTTGCTGCAGACCATGTAAATTCAGCGCTGGTAACACTCCCATCTCCTCAGTTG
GCTGCCCTGCGATCACTAAACTCTTTCTCTGCTGCAGACTCTGCTGTCTCATTGCATTGGTCAACTGTTG
CTGTGCAGCAGGCATAGAATCCTGTTGGAACTACAAGAGAAAGATCTACAAGATGCAGTAAAATTTTAAA
AATGCAAAATAGTGCGTATAGTATAACAAAAGGGGAAAATAAAAATATATGTATGGGCTGGGCATGGTGG
CTCGTGCCTGTAATCCTAGCATTTTGGGAGGCTGAGGCAAGCGGATCAACTGAGGTCAGGAGTTTGAGAC
CAGCTTGGCCAATGTGGTGAAACCTTGTCTCTACTAAAAATAAAAAAATTAGCCACGCATGATGGCACAG
ACATGTAATCCCAGCTATTGGGGAAGCTGAGGCAGGAGAATCACTTTAACCTGGGAGGCAGAGGTTGCAG
TGAGCCAAGATCATGCCACTGCACTCCAGCCTGGGCGACAGAGTGAGACTCTGTCTCAAAAAAAAAAAAA
AAAAAAAAAAGGAATATACATACGTATATATTTGCTTGTTTTTGCAGACAGAAAATCTAGGGATGCATAA
GAAACTGAGAAAATACATAGTCAAGGGGCAAGGGTGGAGCAAGACTTTTCATGATAAATGTAACTTGTTT
ATTTTGAGATTTGAATAGCGACTATATTGCATATTAGAAGCTTTTAATGATAAAAATATAGATGTTGGGC
CAGGCACAATGGCTCACGCCTGTAATCCCAGCACTTTGGGAGGCTGAAGCAGGCGGATCACCTGAGGTCA
GGAGTTCAAGACCAGCCTGGCCAACATGGCGAAACCCTGTCTCTACTAAAAATACAAAAATTAGCTGGGT
GTGGTGGCAGGTGCCTGTAATCCCAGCTACTCAGGAGGCTGAGGCACGAGAATCACTTGAACCCAGGAGG
CGGTGGTTGTAGTGAGCCGAGATTGCGCCACTGCACTCCTGCCTGGGTACCAGAACGAGACTCCATCTAA
AAAAAAAAAAAAAAAAAAAAATTGAACATCAGTGAAAATGTAAAATTTAGAGGAATACTTATCTCACAGG
AGCAATGAAAAGAGGCTAAATCTAAAGTAGCCATTATTACTCGAGAGGCTGAGGCAAGAGAATCGCTTAA
```

Sequences producing significant alignments Download Select columns Show 100

select all *40 sequences selected* GenBank Graphics Distance tree of results MSA Viewer

Description	Scientific Name	Max Score	Total Score	Query Cover	E value	Per. Ident	Acc. Len	Accession
Homo sapiens chromosome 1, GRCh38.p14 Primary Assembly	Homo sapiens	3.010e+05	3.044e+05	100%	0.0	100.00%	248956422	NC_000001.11
Homo sapiens isolate CHM13 chromosome 1, alternate assembly T2T-CHM13v2.0	Homo sapiens	3.007e+05	3.040e+05	100%	0.0	99.96%	248387328	NC_060925.1
Homo sapiens isolate CHM13 chromosome 19, alternate assembly T2T-CHM13v2.0	Homo sapiens	630	3132	0%	1e-175	84.16%	61707364	NC_060943.1
Homo sapiens chromosome 19, GRCh38.p14 Primary Assembly	Homo sapiens	630	3132	0%	1e-175	84.16%	58617616	NC_000019.10
Homo sapiens isolate CHM13 chromosome 2, alternate assembly T2T-CHM13v2.0	Homo sapiens	580	1341	0%	1e-160	81.68%	242696752	NC_060926.1
Homo sapiens chromosome 2, GRCh38.p14 Primary Assembly	Homo sapiens	580	1341	0%	1e-160	81.68%	242193529	NC_000002.12
Homo sapiens isolate CHM13 chromosome 17, alternate assembly T2T-CHM13v2.0	Homo sapiens	564	1495	0%	1e-155	91.33%	84276897	NC_060941.1
Homo sapiens chromosome 17, GRCh38.p14 Primary Assembly	Homo sapiens	564	1495	0%	1e-155	91.33%	83257441	NC_000017.11
Homo sapiens chromosome 5, GRCh38.p14 Primary Assembly	Homo sapiens	560	1112	0%	2e-154	82.50%	181538259	NC_000005.10
Homo sapiens isolate CHM13 chromosome 3, alternate assembly T2T-CHM13v2.0	Homo sapiens	556	1537	0%	2e-153	90.89%	201105948	NC_060927.1
Homo sapiens isolate CHM13 chromosome 5, alternate assembly T2T-CHM13v2.0	Homo sapiens	551	1140	0%	1e-151	91.02%	182045439	NC_060929.1
Homo sapiens chromosome 3, GRCh38.p14 Primary Assembly	Homo sapiens	551	1531	0%	1e-151	90.65%	198295559	NC_000003.12
Homo sapiens isolate CHM13 chromosome 16, alternate assembly T2T-CHM13v2.0	Homo sapiens	521	580	0%	8e-143	89.95%	96330374	NC_060940.1
Homo sapiens chromosome 16, GRCh38.p14 Primary Assembly	Homo sapiens	518	576	0%	1e-141	89.73%	90338345	NC_000016.10
Homo sapiens isolate CHM13 chromosome 20, alternate assembly T2T-CHM13v2.0	Homo sapiens	492	676	0%	7e-134	88.28%	66210255	NC_060944.1
Homo sapiens chromosome 20, GRCh38.p14 Primary Assembly	Homo sapiens	492	676	0%	7e-134	88.28%	64444167	NC_000020.11
Homo sapiens isolate CHM13 chromosome 15, alternate assembly T2T-CHM13v2.0	Homo sapiens	464	464	0%	1e-125	87.75%	99753195	NC_060939.1
Homo sapiens chromosome 15, GRCh38.p14 Primary Assembly	Homo sapiens	464	464	0%	1e-125	87.75%	101991189	NC_000015.10
Homo sapiens isolate CHM13 chromosome 13, alternate assembly T2T-CHM13v2.0	Homo sapiens	449	449	0%	4e-121	87.19%	113566686	NC_060937.1
Homo sapiens chromosome 13, GRCh38.p14 Primary Assembly	Homo sapiens	449	449	0%	4e-121	87.19%	114364328	NC_000013.11
Homo sapiens isolate CHM13 chromosome 6, alternate assembly T2T-CHM13v2.0	Homo sapiens	448	448	0%	1e-120	87.14%	172126628	NC_060930.1
Homo sapiens chromosome 6, GRCh38.p14 Primary Assembly	Homo sapiens	448	448	0%	1e-120	87.14%	170805979	NC_000006.12
Homo sapiens isolate CHM13 chromosome 11, alternate assembly T2T-CHM13v2.0	Homo sapiens	429	429	0%	5e-115	85.61%	135127769	NC_060935.1
Homo sapiens chromosome 11, GRCh38.p14 Primary Assembly	Homo sapiens	429	429	0%	5e-115	85.61%	135086622	NC_000011.10

ii. Variant analysis report with predicted impacts.

Variant Effect Predictor results

Job details

Summary statistics

Category	Count
Variants processed	63
Variants filtered out	0
Novel / existing variants	0 (0.0) / 63 (100.0)
Overlapped genes	10
Overlapped transcripts	34
Overlapped regulatory features	4

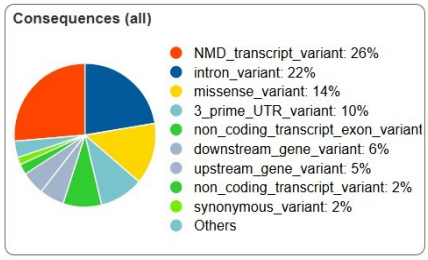

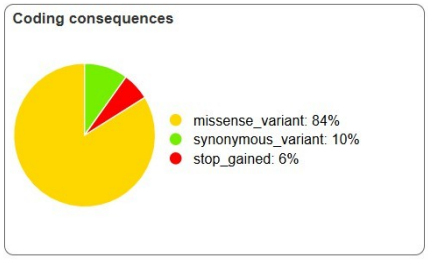

rs2536, COSV63868658	T	T/C	-1	MANE_Select	NM_004958.4	1	P1	-	-	0.0970	benign	
rs2536, COSV63868658	T	T/C	-1	-	-	2	-	-	-	0.0970	benign	
rs2536, COSV63868658	T	T/C	1	-	-	2	-	-	-	0.0970	benign	
rs2536, COSV63868658	T	T/C	1	-	-	3	-	-	-	0.0970	benign	
rs2536, COSV63868658	T	T/C	-1	-	-	3	-	-	-	0.0970	benign	
rs2536, COSV63868658	T	T/C	-1	-	-	3	-	-	-	0.0970	benign	
rs2536, COSV63868658	T	T/C	-1	-	-	5	-	-	-	0.0970	benign	
rs2536, COSV63868658	T	T/C	-1	-	-	-	-	-	-	0.0970	benign	
rs2536, COSV63868658	T	T/C	-1	-	-	-	-	-	-	0.0970	benign	
rs2536, COSV63868658	T	T/C	-1	-	-	-	-	-	-	0.0970	benign	
rs2536, COSV63868658	T	T/C	-1	-	-	-	-	-	-	0.0970	benign	
rs2536, COSV63868658	T	T/C	-1	-	-	-	-	-	-	0.0970	benign	

rs1057519777, CM176509, COSV63868318, COSV63878747	C	C/A/G/T	-1	MANE_Select	NM_004958.4	1	P1	0	-	-	likely_pathogenic	0, 1, 1, 1	24631838
rs1057519777, CM176509, COSV63868318, COSV63878747	C	C/A/G/T	-1	MANE_Select	NM_004958.4	1	P1	0	-	-	uncertain_significance	0, 1, 1, 1	24631838
rs1057519777, CM176509, COSV63868318, COSV63878747	C	C/A/G/T	-1	-	-	2	-	-	-	-	-	0, 1, 1, 1	24631838
rs1057519777, CM176509, COSV63868318, COSV63878747	C	C/A/G/T	-1	-	-	2	-	-	-	-	likely_pathogenic	0, 1, 1, 1	24631838
rs1057519777, CM176509, COSV63868318, COSV63878747	C	C/A/G/T	-1	-	-	2	-	-	-	-	uncertain_significance	0, 1, 1, 1	24631838
rs1057519777, CM176509, COSV63868318, COSV63878747	C	C/A/G/T	-1	-	-	3	-	-	-	-	-	0, 1, 1, 1	24631838

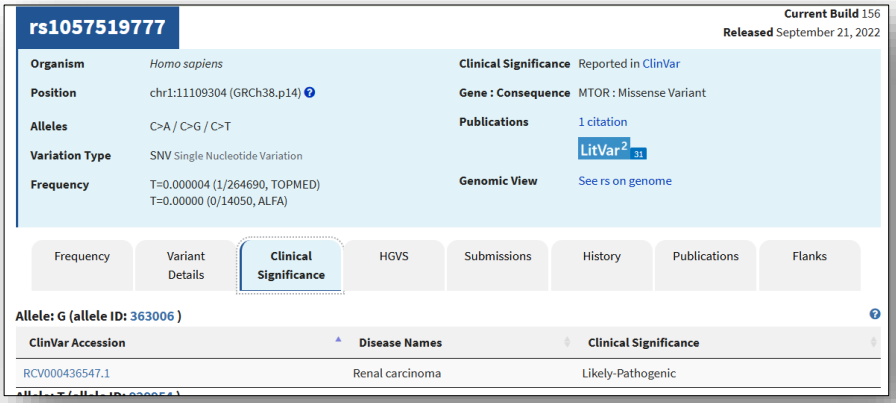

rs1057519777

Current Build 156
Released September 21, 2022

Organism	*Homo sapiens*	**Clinical Significance**	Reported in ClinVar
Position	chr1:11109304 (GRCh38.p14)	**Gene : Consequence**	MTOR : Missense Variant
Alleles	C>A / C>G / C>T	**Publications**	1 citation
Variation Type	SNV Single Nucleotide Variation		LitVar 31
Frequency	T=0.000004 (1/264690, TOPMED) T=0.00000 (0/14050, ALFA)	**Genomic View**	See rs on genome

Frequency | Variant Details | Clinical Significance | HGVS | Submissions | History | Publications | Flanks

Allele: G (allele ID: 363006)

ClinVar Accession	Disease Names	Clinical Significance
RCV000436547.1	Renal carcinoma	Likely-Pathogenic

The variant analysis of the **MTOR gene** was conducted using the Variant Effect Predictor (VEP), which identified multiple variants with potential functional and clinical significance. Among these, rs1057519777 was flagged as likely pathogenic. These variants were predicted to alter critical functional domains,which are essential for the MTOR protein's regulatory activity.Variants with high pathogenic scores were linked to disorders such as real carcinoma, as identified through integration with clinical databases. These findings emphasize the significance of certain variants in the MTOR gene and their potential impact on cellular processes, particularly in pathways related to growth and metabolism.

iii. Phylogenetic tree and interpretation

.

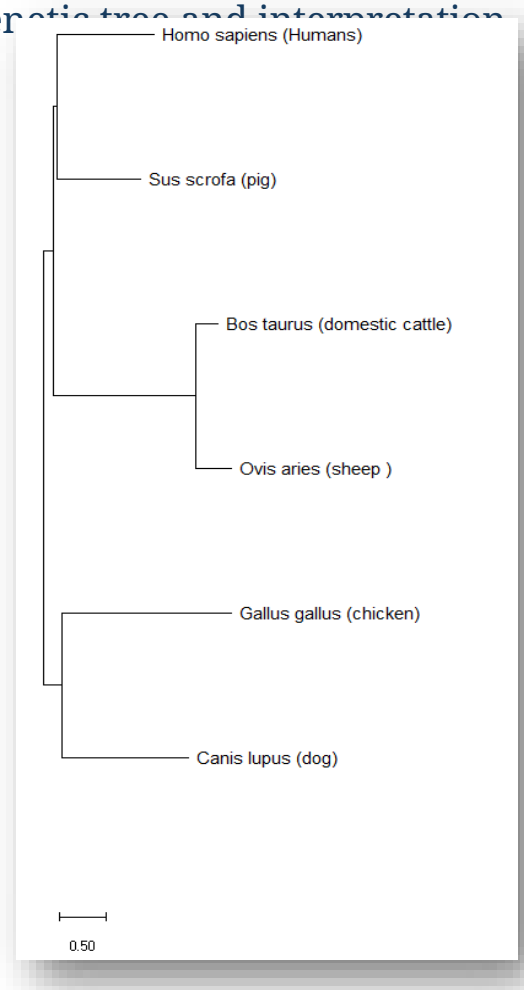

The phylogenetic tree constructed using the MTOR gene sequences from different organisms revealed significant evolutionary relationships and conservation across species. The analysis demonstrated that closely related species clustered together, indicating a high degree of sequence similarity and evolutionary proximity. Divergence was observed among more distantly related species which formed separate branches. This divergence corresponds to species-specific adaptations in the MTOR gene, possibly driven by distinct evolutionary pressures.

iv. RNA structure visualization and functional insights.

FASTA

Propylea japonica serine/threonine-protein kinase mTOR (mTOR) mRNA, complete cds

GenBank: OK482671.1

GenBank Graphics

```
>OK482671.1 Propylea japonica serine/threonine-protein kinase mTOR (mTOR) mRNA, complete
cds
ATGTCTTCCGCTGCAATGGAAATATTCATCGCTGGATTGAAATCCAAAAGCGCCGATACTAGAAACAAAA
CAGCAAACGATCTATCCCAATACCTCAAGACAGAACTTCGTGAAGCTACACCAGACGAAATCAACAATTT
TTGCGATGATTTTAACCATCATATCTTCAAAATGGTCTCAAGCCCAGACGTCAATGAAAAAATGGGTGGA
TTACTGGCTATTGTGTGCCTTACTGGGGCCGACTTTGGTAACATGACAACGAGGATATCTCGATTTGCCA
ACTACCTGCGAAACCTTATACCTTCAAACGATGTTGGCGTTATGGAACTGGCAGCTAAAACCATGGGAAG
ACTTGCCTTAGTTTTCTCAGGTTCCAAAGCCTCTGAATATGTTGAGTTTGAAGTTAAACGAGCTTTTGAA
TGGCTGGGAAGGGAACGTTTCGAGAGCCGAAGGCATGCTGCTGTATTGATACTGAAAGAGTTAGCAATAA
CAGTTCCCACTTATTTTTATCAGCAAGTGTCACCGTTTTTCGATTCGATTTTTTACGCTGTTCAAGACCC
AAAAACTAGTATAAGAGAGGATGCTGTTGAAGCTTTGAGAGCTGCGTTAGTTGTAACCGCACAAAGAGAA
ACTGCGAGGCAAAATCAAAAACCACAATGGTACAAACAATGCTACGACGAATTCGCCAAACTCCTAAGCA
TAGACAAAGGAGAAAGAGTCAAGGACGAAAGAATCCACGGTGGTCTTCTCATCATGAACGAGCTCCTGCG
CTGCTCCAACGCCACCTGGGAGCGCAAGTACAAGAACCTAGTCGAAATTACCGACCCACGCACCAAATCC
AAGGACAACATAATCTACATCGACAAGAAACTGCCCAAACTTCGAAGTTACAGCGTTTTCGGCAACGCAG
AGGCCAACATCCCTATCGTAGAATCTTTGGTCTGTCAACAGCTCCTCAAAGAGAAATTTGAGTTTGTCTG
TACGGACATTTTGAATCAGAGGGCTTCTAGAAGTGCTTACGTACAACAGACGATCCTCACACTTTTACCA
CGACTTGCTGCGTTCGACCGAAAGTTTTTTGTTAAGGATTTCTTGAACACTTCCATGACCCACCTTTTTA
CCATGATTGGAAAAGGCAGAGAGAAAGATCGAGGTATCTGTTTTGTCACCTTGGGGTTAATGGCTTTAGC
AGTGGAAAACGACATAGAACCATATTTGGATAAAATAATGGAAGCGGTGAGGAACGCTCTACCAAAAGCA
GACAATCTATCGAGAAAAAGAGCATACGTAGACTCCTCCATCTTTAAATGCATAACCTATTTAGCCCACG
CACTCGAAAAGCACAACAGGATGGACATCTCGAATCTCCTGGACCAAATGCTAGCCAGCGGGTTGACTCC
ATCTTTGACCATCTGTCTCAGAGAACTAGCCAAGAAAATACCACCAGAGAAAGAAAAGATAAGCGTGGGG
CTGCTCAAAATGCTGTCGACCATCCTGTTGACCAAGACGTTGGTACATCCGGGCATGCCGGGTCAGCTCA
TACTGCAGTATGCGAGCATTGGTAACGTGCCGGAGACCAACGATTCACAGATGCTGGTGTTGGCGTTGAA
CACGCTTGGTACGTTCGATTTTAAGAATCAGAACTTGGTGCAGTTTATACAGAGGTGTTCCAACTATTAT
ACGACGAATGATTCACAGGACGTTCGCTTAGAAGCAGTAAAAACCACCTGCCGCCTACTCAAAAAAACCC
TCCAGTCGCAAAACGAAGACCCCAACAAAACGATGGTGGACGCCATCGCCAAGGTGCTGGAGCGCCTCCT
GGTGGTCGGCGTGACCGACACGGACCCCAGCGTCCGCTTCGGCGTCCTAACCTCTCTAGATCCCATCTTC
GACTCGGTCTTGAGCCAGGCGGACGTCCTCACGTACCTCTTCATAGCGATGCAGGACGAGGTGTTCGAGA
TAAGGGAGGTGGCCCTCTTCATCTACGGCAGGCTGAGCACCAAGAACCCGGCGTACATTATACCGTCCTT
```

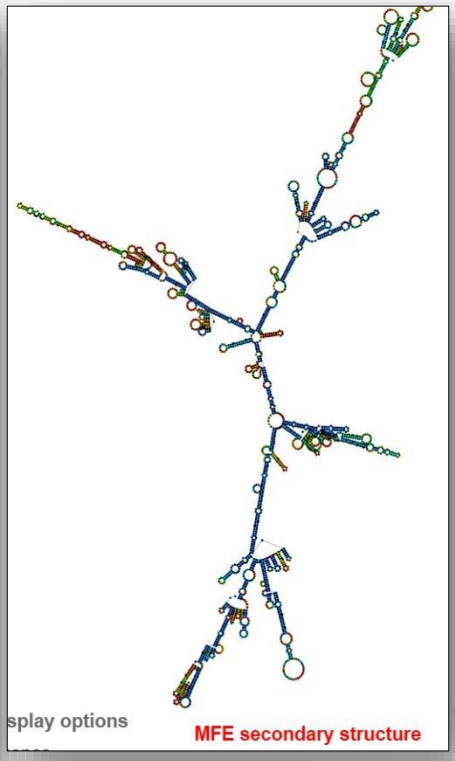

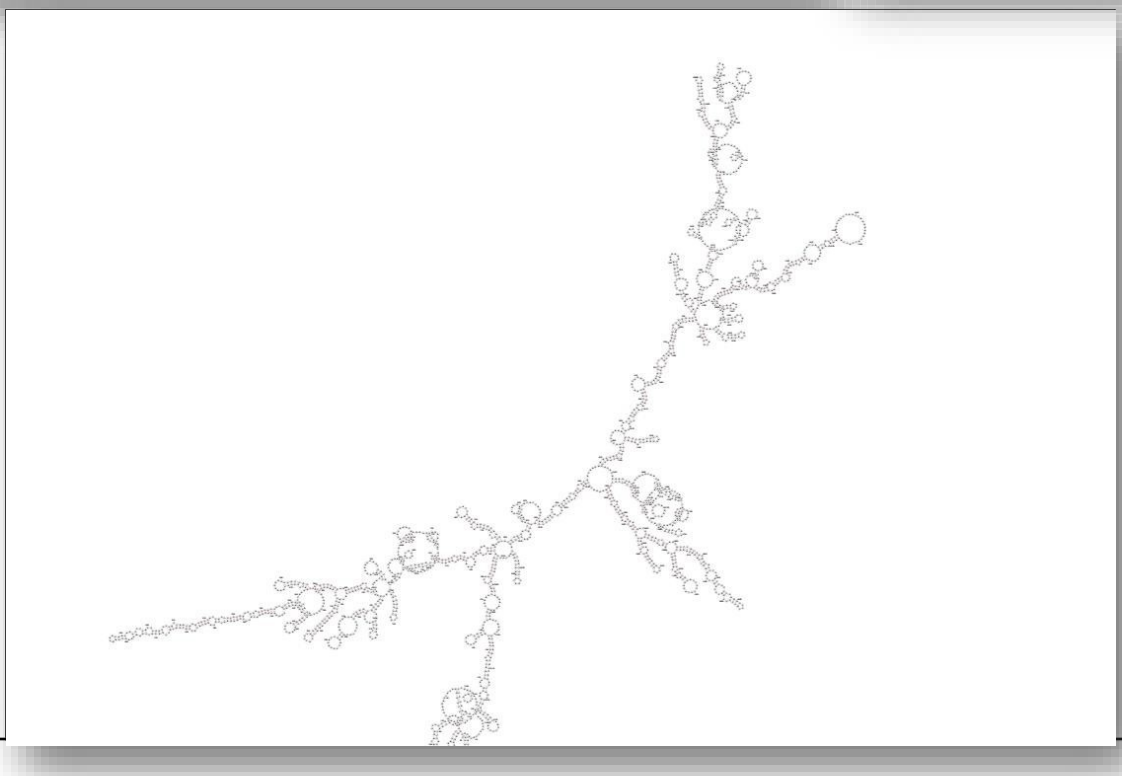

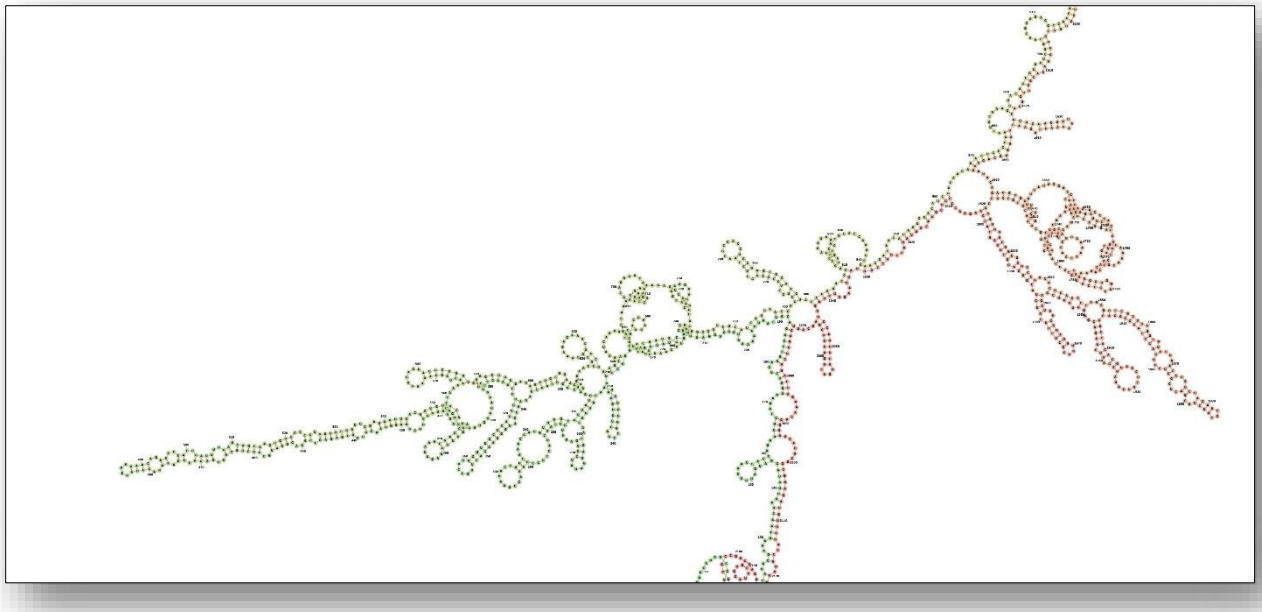

The RNA secondary structure of the **MTOR gene transcript** was predicted using RNAfold, providing valuable insights into its potential functional elements. The predicted structure revealed distinct stem-loop regions, which are critical for the stability and functionality of RNA. Stem-loops often serve as recognition sites for RNA-binding proteins and regulatory molecules, influencing processes such as translation, splicing, and degradation.

v- Protein model with structural annotations *(Structural features and their potential functional relevance)*

Protein Name : Serine/threonine protein kinase mTOR

Alternative names	FK506-binding protein 12-rapamycin complex-associated protein 1
	FKBP12-rapamycin complex-associated protein
	Mammalian target of rapamycin (mTOR)
	Mechanistic target of rapamycin
	Rapamycin and FKBP12 target 1
	Rapamycin target protein 1

Sequence

Sequence status | Complete

See also sequence in **UniParc** or sequence clusters in **UniRef**

Tools ▾ Download Add Highlight ▾ Copy sequence

Length 2,549
Mass (Da) 288,892

Last updated 1995-11-01 v1
Checksum 7D9AD6E784882AB4

```
        10         20         30         40         50         60         70         80         90        100        110
MLGTGPAAAT TAATTSSNVS VLQQFASGLK SRNEETRAKA AKELQHYVTM ELREMSQEES TRFYDQLNHH IFELVSSSDA NERKGGILAI ASLIGVEGGN ATRIGRFANY

       120        130        140        150        160        170        180        190        200        210        220
LRNLLPSNDP VVMEMASKAI GRLAMAGDTF TAEYVEFEVK RALEWLGADR NEGRRHAAVL VLRELAISVP TFFFQQVQPF FDNIFVAVWD PKQAIREGAV AALRACLILT

       230        240        250        260        270        280        290        300        310        320        330
TQREPKEMQK PQWYRHTFEE AEKGFDETLA KEKGMNRDDR IHGALLILNE LVRISSMEGE RLREEMEEIT QQQLVHDKYC KDLMGFGTKP RHITPFTSFQ AVQPQQSNAL

       340        350        360        370        380        390        400        410        420        430        440
VGLLGYSSHQ GLMGFGTSPS PAKSTLVESR CCRDLMEEKF DQVCQWVLKC RNSKNSLIQM TILNLLPRLA AFRPSAFTDT QYLQDTMNHV LSCVKKEKER TAAFQALGLL

       450        460        470        480        490        500        510        520        530        540        550
SVAVRSEFKV YLPRVLDIIR AALPPKDFAH KRQKAMQVDA TVFTCISMLA RAMGPGIQQD IKELLEPMLA VGLSPALTAV LYDLSRQIPQ LKKDIQDGLL KMLSLVLMHK
```

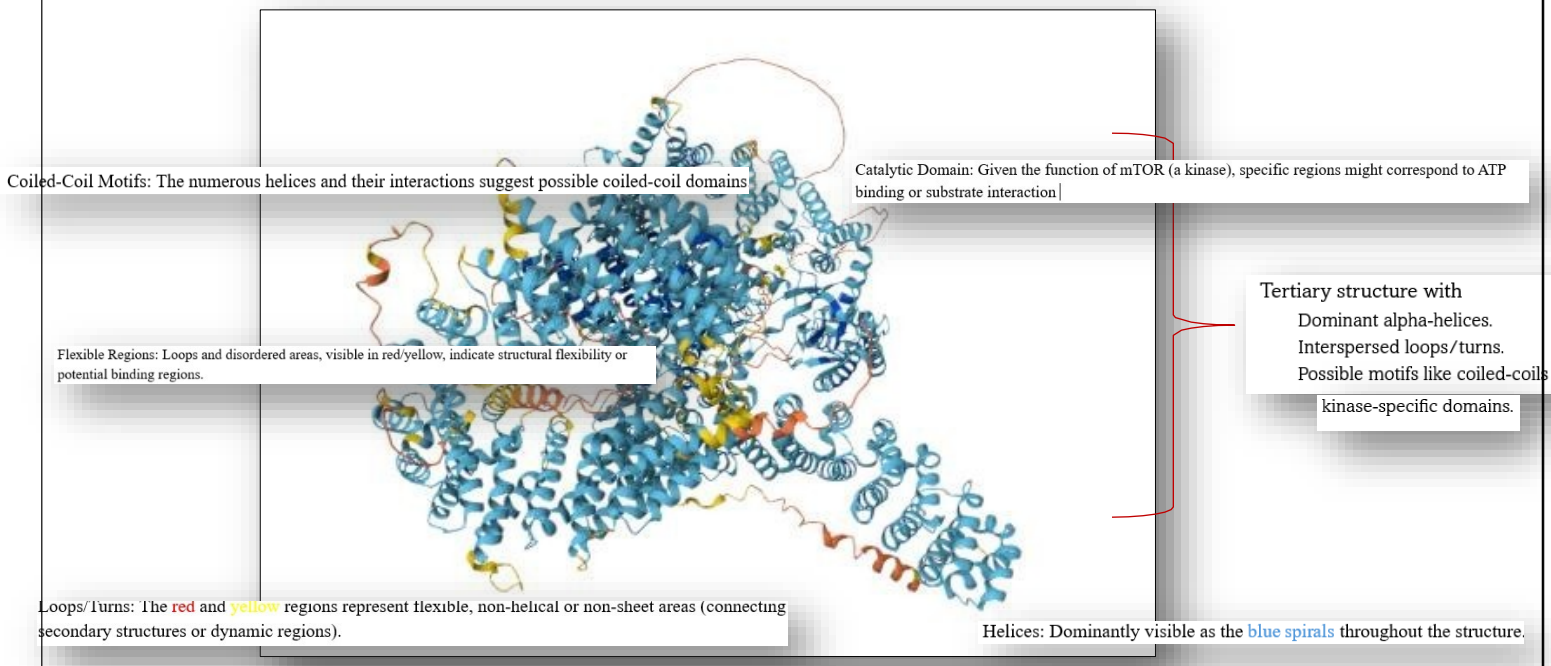

Predicted Protein Model Obtained from Alpha Fold – Redirected from Uniprot

The image shows a single folded polypeptide chain (ribbon structure), representing the 3D arrangement of secondary structural elements such as helices, sheets, and loops.

Protein Function :

Serine/threonine protein kinase which is a central regulator of cellular metabolism, growth and survival in response to hormones, growth factors, nutrients, energy and stress signalsMTOR directly or indirectly regulates the phosphorylation of at least 800 proteins . n response to nutrients, growth factors or amino acids, mTORC1 is recruited to the lysosome membrane and promotes protein, lipid and nucleotide synthesis by phosphorylating key regulators of mRNA translation and ribosome synthesis.

vi- Functional Analysis

MTOR *Pathways Indicating Functional Significance :*

Entry	Thumbnail Image	Name	Description	Object	Legend
map04150	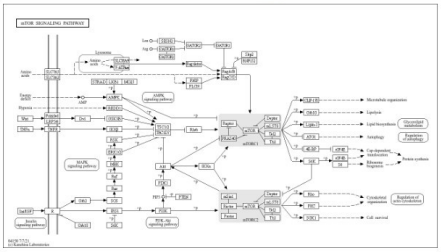	mTOR signaling pathway	...he mammalian (mechanistic) target of rapamycin (mTOR) is a highly conserved serine/threonine protein...	...G), K02144 (ATPeV1H) K14995 (SLC38A9) K20397 (LAMTOR1), K20398 (LAMTOR2), K04370 (LAMTOR3), K20399 (...	mTOR SIGNALING PATHWAY IRS1 PI3K Raf MAPK signaling pathway ERK1/2 Ras MEK PTEN PDK1 Akt TSC1/2 Rh...
map05225	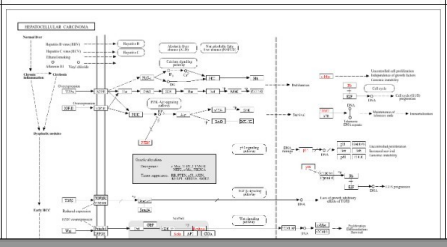	Hepatocellular carcinoma	...inase (PI3K)/AKT/mammalian target of rapamycin (mTOR) pathway. Recent studies using whole-exome sequ...	...17449 (SHC4) K04364 (GRB2) K03099 (SOS) K07203 (MTOR) K04688 (RPS6KB) K13769 (IGF2) K05087 (IGF1R) K...	... CARCINOMA EGFR Ras Raf MEK ERK1/2 Shc Grb2 SOS mTOR S6K IGF-II IGF1R PI3K-Akt signaling pathway Ras...

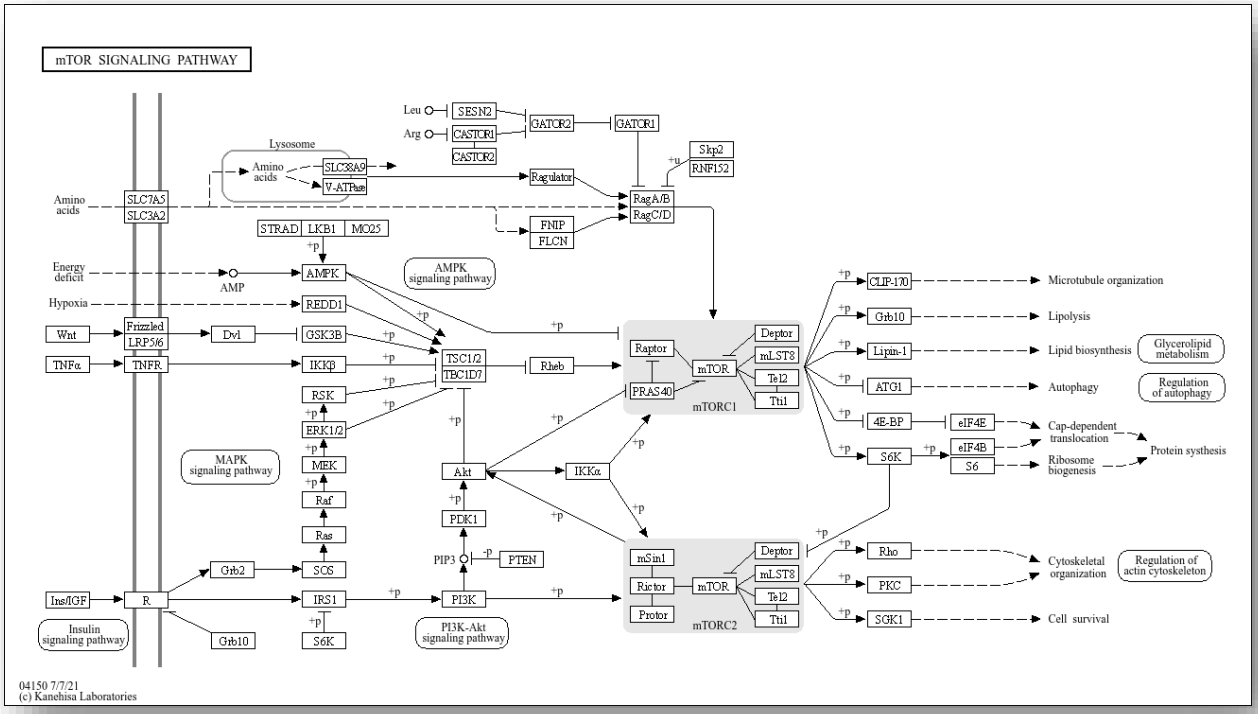

Target of rapamycin (mTOR) is a highly-conserved serine/threonine kinase that regulates cell growth and division in response to energy levels, growth signals, and nutrients (Zoncu et al. 2011). Control of mTOR activity is critical for the cell since its dysregulation leads to cancer, metabolic disease, and diabetes (Laplante & Sabatini 2012). In cells, mTOR exists as two structurally distinct complexes termed mTOR complex 1 (mTORC1) and mTOR complex 2 (mTORC2), each one with specificity for different sets of effectors. mTORC1 couples energy and nutrient abundance to cell growth and proliferation by balancing anabolic (protein synthesis and nutrient storage) and catabolic (autophagy and utilization of energy stores) processes. *– Extracted from reactome pathway browser*

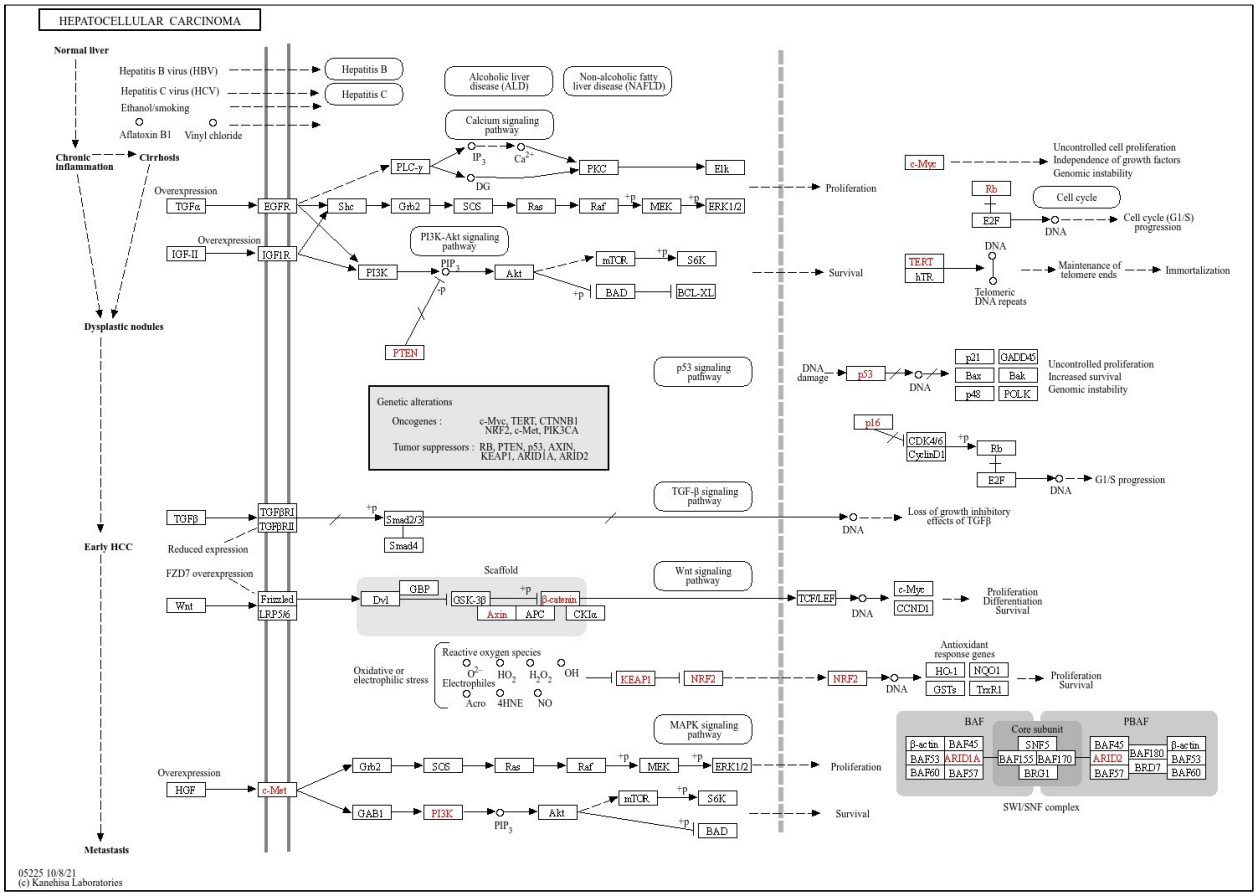

Class IA PI3K is a heterodimer of a p85 regulatory subunit (encoded by PIK3R1, PIK3R2 or PIK3R3) and a p110 catalytic subunit (encoded by PIK3CA, PIK3CB or PIK3CD). In the absence of activating signals, the regulatory subunit stabilizes the catalytic subunit while inhibiting its activity. The complex becomes activated when extracellular signals stimulate the phosphorylation of the cytoplasmic domains of transmembrane receptors or receptor-associated proteins. The p85 regulatory subunit binds phosphorylated motifs of activator proteins, which induces a conformational change that relieves p85-mediated inhibition of the p110 catalytic subunit and enables PI3K to phosphorylate PIP2 to form PIP3. The phosphoinositide kinase activity of PI3K is opposed by the phosphoinositide phosphatase activity of PTEN.

▪ Conclusion

The primary objective of this study was to analyze the MTOR gene to understand the relationship between its sequence, structure, and function. Through this analysis, it was concluded that the MTOR gene plays a pivotal role in cellular growth, metabolism, and survival, with its evolutionary conservation across species underscoring its biological significance. Key findings include the identification of genetic variations that may influence disease development, such as cancer and metabolic disorders, and the presence of functional RNA structural elements potentially critical for gene regulation. Additionally, the structural modeling of the MTOR protein revealed domains essential for its role in cellular signaling pathways.These conclusions highlight the importance of MTOR in health and disease, offering insights that may guide future research and therapeutic strategies.

▪ References :

- National Center for Biotechnology Information (NCBI). *NCBI Gene Database*. Retrieved from https://www.ncbi.nlm.nih.gov/gene
- Saxton, R. A., & Sabatini, D. M. (2017). mTOR signaling in growth, metabolism, and disease. *Cell*, 168(6), 960-976.
- Ensembl Project.*Ensembl Genome Browser*. Retrieved from https://www.ensembl.org
- Altschul, S. F., et al. (1990). *BLAST (Basic Local Alignment Search Tool)*. Retrieved from https://blast.ncbi.nlm.nih.gov/Blast.cgi
- Ensembl Variant Effect Predictor (VEP)
- Molecular Evolutionary Genetics Analysis (MEGA).Retrieved from https://www.megasoftware.net
- Vienna RNA Website. *RNAfold*. Retrieved from http://rna.tbi.univie.ac.at/cgi-bin/RNAWebSuite/RNAfold.cgi
- SWISS-MODEL. Retrieved from https://swissmodel.expasy.org
- AlphaFold Protein Structure Database. Retrieved from https://www.alphafold.ebi.ac.uk
- Kyoto Encyclopedia of Genes and Genomes (KEGG). Retrieved from https://www.kegg.jp
- Reactome Pathway Knowledgebase.Retrieved from https://reactome.org