Newnes

INCLUDES

FREE
NEWNES ONLINE
MEMBERSHIP

PRACTICAL UML STATECHARTS IN C/C++, Second Edition

Event-Driven Programming for Embedded Systems

- Focuses on core concepts
- Provides a complete, ready-to-use, open source software architecture
- Includes an extensive example using the ARM Cortex-M3

Miro Samek

Practical UML Statecharts in C/C++

Event-Driven Programming for Embedded Systems

2nd Edition

Miro Samek

ELSEVIER

AMSTERDAM • BOSTON • HEIDELBERG • LONDON
NEW YORK • OXFORD • PARIS • SAN DIEGO
SAN FRANCISCO • SINGAPORE • SYDNEY • TOKYO

Newnes is an imprint of Elsevier

Newnes

Newnes is an imprint of Elsevier
30 Corporate Drive, Suite 400, Burlington, MA 01803, USA
Linacre House, Jordan Hill, Oxford OX2 8DP, UK

Copyright © 2009, Elsevier Inc. All rights reserved.

No part of this publication may be reproduced, stored in a retrieval system, or transmitted in any form or by any means, electronic, mechanical, photocopying, recording, or otherwise, without the prior written permission of the publisher.

Permissions may be sought directly from Elsevier's Science & Technology Rights Department in Oxford, UK: phone: (+44) 1865 843830, fax: (+44) 1865 853333, E-mail: permissions@elsevier.com. You may also complete your request online via the Elsevier homepage (http://elsevier.com), by selecting "Support & Contact" then "Copyright and Permission" and then "Obtaining Permissions."

Library of Congress Cataloging-in-Publication Data
Application submitted.

British Library Cataloguing-in-Publication Data
A catalogue record for this book is available from the British Library.

ISBN: 978-0-7506-8706-5

For information on all Newnes publications
visit our Web site at www.elsevierdirect.com

08 09 10 11 10 9 8 7 6 5 4 3 2 1

Printed in the United States of America

Working together to grow
libraries in developing countries
www.elsevier.com | www.bookaid.org | www.sabre.org
ELSEVIER BOOK AID International Sabre Foundation

Table of Contents

Part I: Uml State Machines ***1***

Chapter 1: Getting Started with UML State Machines and Event-Driven Programming ***3***

1.1 Installing the Accompanying Code 4
1.2 Let's Play 5
1.2.1 Running the DOS Version 7
1.2.2 Running the Stellaris Version 8
1.3 The main() Function 11
1.4 The Design of the "Fly 'n' Shoot" Game 16
1.5 Active Objects in the "Fly 'n' Shoot" Game 20
1.5.1 The Missile Active Object 21
1.5.2 The Ship Active Object 24
1.5.3 The Tunnel Active Object 27
1.5.4 The Mine Components 29
1.6 Events in the "Fly 'n' Shoot" Game 32
1.6.1 Generating, Posting, and Publishing Events 36
1.7 Coding Hierarchical State Machines 39
1.7.1 Step 1: Defining the Ship Structure 39
1.7.2 Step 2: Initializing the State Machine 42
1.7.3 Step 3: Defining State-Handler Functions 43
1.8 The Execution Model 48
1.8.1 Simple Nonpreemptive "Vanilla" Scheduler 48
1.8.2 The QK Preemptive Kernel 49
1.8.3 Traditional OS/RTOS 50
1.9 Comparison to the Traditional Approach 50
1.10 Summary 52

Chapter 2: A Crash Course in UML State Machines ***55***

2.1 The Oversimplification of the Event-Action Paradigm 56
2.2 Basic State Machine Concepts 59
2.2.1 States 60
2.2.2 State Diagrams 61

www.newnespress.com

2.2.3 State Diagrams versus Flowcharts 61
2.2.4 Extended State Machines 63
2.2.5 Guard Conditions 64
2.2.6 Events 66
2.2.7 Actions and Transitions 67
2.2.8 Run-to-Completion Execution Model 67
2.3 UML Extensions to the Traditional FSM Formalism 68
2.3.1 Reuse of Behavior in Reactive Systems 69
2.3.2 Hierarchically Nested States 69
2.3.3 Behavioral Inheritance 71
2.3.4 Liskov Substitution Principle for States 73
2.3.5 Orthogonal Regions 74
2.3.6 Entry and Exit Actions 75
2.3.7 Internal Transitions 77
2.3.8 Transition Execution Sequence 78
2.3.9 Local versus External Transitions 81
2.3.10 Event Types in the UML 82
2.3.11 Event Deferral 83
2.3.12 Pseudostates 83
2.3.13 UML Statecharts and Automatic Code Synthesis 85
2.3.14 The Limitations of the UML State Diagrams 86
2.3.15 UML State Machine Semantics: An Exhaustive Example 87
2.4 Designing A UML State Machine 91
2.4.1 Problem Specification 91
2.4.2 High-Level Design 92
2.4.3 Scavenging for Reuse 93
2.4.4 Elaborating Composite States 94
2.4.5 Refining the Behavior 95
2.4.6 Final Touches 96
2.5 Summary 96

Chapter 3: Standard State Machine Implementations 101
3.1 The Time-Bomb Example 102
3.1.1 Executing the Example Code 104
3.2 A Generic State Machine Interface 105
3.2.1 Representing Events 106
3.3 Nested Switch Statement 108
3.3.1 Example Implementation 108
3.3.2 Consequences 112
3.3.3 Variations of the Technique 113
3.4 State Table 113
3.4.1 Generic State-Table Event Processor 114
3.4.2 Application-Specific Code 118

www.newnespress.com

3.4.3 Consequences 122
3.4.4 Variations of the Technique 123
3.5 Object-Oriented State Design Pattern 124
3.5.1 Example Implementation 126
3.5.2 Consequences 130
3.5.3 Variations of the Technique 131
3.6 QEP FSM Implementation 132
3.6.1 Generic QEP Event Processor 133
3.6.2 Application-Specific Code 137
3.6.3 Consequences 142
3.6.4 Variations of the Technique 143
3.7 General Discussion of State Machine Implementations 144
3.7.1 Role of Pointers to Functions 144
3.7.2 State Machines and C++ Exception Handling 145
3.7.3 Implementing Guards and Choice Pseudostates 145
3.7.4 Implementing Entry and Exit Actions 146
3.8 Summary 146

Chapter 4: Hierarchical Event Processor Implementation 149
4.1 Key Features of the QEP Event Processor 150
4.2 QEP Structure 152
4.2.1 QEP Source Code Organization 153
4.3 Events 154
4.3.1 Event Signal (`QSignal`) 154
4.3.2 `QEvent` Structure in C 155
4.3.3 `QEvent` Structure in C++ 157
4.4 Hierarchical State-Handler Functions 158
4.4.1 Designating the Superstate (`Q_SUPER()` Macro) 158
4.4.2 Hierarchical State-Handler Function Example in C 158
4.4.3 Hierarchical State-Handler Function Example in C++ 160
4.5 Hierarchical State Machine Class 161
4.5.1 Hierarchical State Machine in C (Structure `QHsm`) 162
4.5.2 Hierarchical State Machine in C++ (Class `QHsm`) 163
4.5.3 The Top State and the Initial Pseudostate 164
4.5.4 Entry/Exit Actions and Nested Initial Transitions 166
4.5.5 Reserved Events and Helper Macros in QEP 168
4.5.6 Topmost Initial Transition (`QHsm_init()`) 170
4.5.7 Dispatching Events (`QHsm_dispatch()`, General Structure) 174
4.5.8 Executing a Transition in the State Machine (`QHsm_dispatch()`, Transition) 177
4.6 Summary of Steps for Implementing HSMs with QEP 183
4.6.1 Step 1: Enumerating Signals 185
4.6.2 Step 2: Defining Events 185

www.newnespress.com

4.6.3 Step 3: Deriving the Specific State Machine 186
4.6.4 Step 4: Defining the Initial Pseudostate 188
4.6.5 Step 5: Defining the State-Handler Functions 188
4.6.6 Coding Entry and Exit Actions 189
4.6.7 Coding Initial Transitions 189
4.6.8 Coding Internal Transitions 190
4.6.9 Coding Regular Transitions 190
4.6.10 Coding Guard Conditions 190
4.7 Pitfalls to Avoid While Coding State Machines with QEP 191
4.7.1 Incomplete State Handlers 192
4.7.2 Ill-Formed State Handlers 193
4.7.3 State Transition Inside Entry or Exit Action 193
4.7.4 Incorrect Casting of Event Pointers 194
4.7.5 Accessing Event Parameters in Entry/Exit Actions or Initial Transitions 194
4.7.6 Targeting a Nonsubstate in the Initial Transition 195
4.7.7 Code Outside the `switch` Statement 196
4.7.8 Suboptimal Signal Granularity 197
4.7.9 Violating the Run-to-Completion Semantics 198
4.7.10 Inadvertent Corruption of the Current Event 198
4.8 Porting and Configuring QEP 199
4.9 Summary 201

Chapter 5: State Patterns 203
5.1 Ultimate Hook 205
5.1.1 Intent 205
5.1.2 Problem 205
5.1.3 Solution 206
5.1.4 Sample Code 207
5.1.5 Consequences 211
5.2 Reminder 211
5.2.1 Intent 211
5.2.2 Problem 212
5.2.3 Solution 212
5.2.4 Sample Code 213
5.2.5 Consequences 218
5.3 Deferred Event 219
5.3.1 Intent 219
5.3.2 Problem 219
5.3.3 Solution 220
5.3.4 Sample Code 222
5.3.5 Consequences 229
5.3.6 Known Uses 230

www.newnespress.com

5.4 Orthogonal Component 230
5.4.1 Intent 230
5.4.2 Problem 230
5.4.3 Solution 231
5.4.4 Sample Code 234
5.4.5 Consequences 243
5.4.6 Known Uses 244
5.5 Transition to History 245
5.5.1 Intent 245
5.5.2 Problem 245
5.5.3 Solution 245
5.5.4 Sample Code 246
5.5.5 Consequences 250
5.5.6 Known Uses 251
5.6 Summary 251

Part II: Real-Time Framework 253

Chapter 6: Real-Time Framework Concepts 255

6.1 Inversion of Control 256
6.2 CPU Management 257
6.2.1 Traditional Sequential Systems 257
6.2.2 Traditional Multitasking Systems 259
6.2.3 Traditional Event-Driven Systems 263
6.3 Active Object Computing Model 266
6.3.1 System Structure 267
6.3.2 Asynchronous Communication 269
6.3.3 Run-to-Completion 269
6.3.4 Encapsulation 269
6.3.5 Support for State Machines 271
6.3.6 Traditional Preemptive Kernel/RTOS 273
6.3.7 Cooperative Vanilla Kernel 274
6.3.8 Preemptive RTC Kernel 276
6.4 Event Delivery Mechanisms 279
6.4.1 Direct Event Posting 280
6.4.2 Publish-Subscribe 281
6.5 Event Memory Management 282
6.5.1 Copying Entire Events 282
6.5.2 Zero-Copy Event Delivery 284
6.5.3 Static and Dynamic Events 286
6.5.4 Multicasting Events and the Reference-Counting Algorithm 286
6.5.5 Automatic Garbage Collection 287
6.5.6 Event Ownership 288

www.drawersplus.com

6.5.7 Memory Pools 289
6.6 Time Management 291
6.6.1 Time Events 291
6.6.2 System Clock Tick 293
6.7 Error and Exception Handling 294
6.7.1 Design by Contract 294
6.7.2 Errors versus Exceptional Conditions 296
6.7.3 Customizable Assertions in C and C++ 297
6.7.4 State-Based Handling of Exceptional Conditions 300
6.7.5 Shipping with Assertions 301
6.7.6 Asserting Guaranteed Event Delivery 302
6.8 Framework-Based Software Tracing 303
6.9 Summary 304

Chapter 7: Real-Time Framework Implementation 307
7.1 Key Features of the QF Real-Time Framework 308
7.1.1 Source Code 309
7.1.2 Portability 309
7.1.3 Scalability 310
7.1.4 Support for Modern State Machines 312
7.1.5 Direct Event Posting and Publish-Subscribe Event Delivery 312
7.1.6 Zero-Copy Event Memory Management 312
7.1.7 Open-Ended Number of Time Events 312
7.1.8 Native Event Queues 313
7.1.9 Native Memory Pool 313
7.1.10 Built-in "Vanilla" Scheduler 313
7.1.11 Tight Integration with the QK Preemptive Kernel 313
7.1.12 Low-Power Architecture 313
7.1.13 Assertion-Based Error Handling 314
7.1.14 Built-in Software Tracing Instrumentation 314
7.2 QF Structure 315
7.2.1 QF Source Code Organization 316
7.3 Critical Sections in QF 318
7.3.1 Saving and Restoring the Interrupt Status 319
7.3.2 Unconditional Locking and Unlocking Interrupts 321
7.3.3 Internal QF Macros for Interrupt Locking/Unlocking 323
7.4 Active Objects 324
7.4.1 Internal State Machine of an Active Object 328
7.4.2 Event Queue of an Active Object 328
7.4.3 Thread of Execution and Active Object Priority 330
7.5 Event Management in QF 333
7.5.1 Event Structure 333
7.5.2 Dynamic Event Allocation 335

www.newnespress.com

7.5.3 Automatic Garbage Collection 339
7.5.4 Deferring and Recalling Events 341
7.6 Event Delivery Mechanisms in QF 343
7.6.1 Direct Event Posting 343
7.6.2 Publish-Subscribe Event Delivery 344
7.7 Time Management 351
7.7.1 Time Event Structure and Interface 351
7.7.2 The System Clock Tick and the `QF_tick()` Function 354
7.7.3 Arming and Disarming a Time Event 356
7.8 Native QF Event Queue 359
7.8.1 The `QEQueue` Structure 360
7.8.2 Initialization of `QEQueue` 362
7.8.3 The Native QF Active Object Queue 362
7.8.4 The "Raw" Thread-Safe Queue 367
7.9 Native QF Memory Pool 369
7.9.1 Initialization of the Native QF Memory Pool 372
7.9.2 Obtaining a Memory Block from the Pool 375
7.9.3 Recycling a Memory Block Back to the Pool 376
7.10 Native QF Priority Set 377
7.11 Native Cooperative "Vanilla" Kernel 379
7.11.1 The `qvanilla.c` Source File 380
7.11.2 The `qvanilla.h` Header File 384
7.12 QP Reference Manual 386
7.13 Summary 387

Chapter 8: Porting and Configuring QF 389

8.1 The QP Platform Abstraction Layer 390
8.1.1 Building QP Applications 390
8.1.2 Building QP Libraries 391
8.1.3 Directories and Files 392
8.1.4 The `qep_port.h` Header File 398
8.1.5 The `qf_port.h` Header File 400
Types of Platform-Specific `QActive` Data Members 402
Base Class for Derivation of `QActive` 402
The Maximum Number of Active Objects in the Application 403
Various Object Sizes Within the QF Framework 403
QF Critical Section Mechanism 404
Include Files Used by this QF Port 404
Interface Used Only Inside QF, But Not in Applications 405
Active Object Event Queue Operations 406
QF Event Pool Operations 406
8.1.6 The `qf_port.c` Source File 407
8.1.7 The `qp_port.h` Header File 411

www.newnespress.com

8.1.8 Platform-Specific QF Callback Functions 412
8.1.9 System Clock Tick (Calling `QF_tick()`) 413
8.1.10 Building the QF Library 413
8.2 Porting the Cooperative "Vanilla" Kernel 414
8.2.1 The `qep_port.h` Header File 414
8.2.2 The `qf_port.h` Header File 415
8.2.3 The System Clock Tick (`QF_tick()`) 417
8.2.4 Idle Processing (`QF_onIdle()`) 418
8.3 QF Port to µC/OS-II (Conventional RTOS) 420
8.3.1 The `qep_port.h` Header File 422
8.3.2 The `qf_port.h` Header File 423
8.3.3 The `qf_port.c` Source File 425
8.3.4 Building the µC/OS-II Port 430
8.3.5 The System Clock Tick (`QF_tick()`) 430
8.3.6 Idle Processing 431
8.4 QF Port to Linux (Conventional POSIX-Compliant OS) 431
8.4.1 The `qep_port.h` Header File 432
8.4.2 The `qf_port.h` Header File 432
8.4.3 The `qf_port.c` Source File 435
8.5 Summary 441

Chapter 9: Developing QP Application 443
9.1 Guidelines for Developing QP Applications 444
9.1.1 Rules 444
9.1.2 Heuristics 445
9.2 The Dining Philosopher Problem 446
9.2.1 Step 1: Requirements 447
9.2.2 Step 2: Sequence Diagrams 447
9.2.3 Step 3: Signals, Events, and Active Objects 449
9.2.4 Step 4: State Machines 451
9.2.5 Step 5: Initializing and Starting the Application 457
9.2.6 Step 6: Gracefully Terminating the Application 460
9.3 Running DPP on Various Platforms 461
9.3.1 "Vanilla" Kernel on DOS 461
9.3.2 "Vanilla" Kernel on Cortex-M3 465
9.3.3 µC/OS-II 469
9.3.4 Linux 472
9.4 Sizing Event Queues and Event Pools 476
9.4.1 In Sizing Event Queues 477
9.4.2 Sizing Event Pools 479
9.4.3 System Integration 480
9.5 Summary 480

www.newnespress.com

Chapter 10: Preemptive Run-to-Completion Kernel *483*
10.1 Reasons for Choosing a Preemptive Kernel 483
10.2 Introduction to RTC Kernels 485
10.2.1 Preemptive Multitasking with a Single Stack 486
10.2.2 Nonblocking Kernel 487
10.2.3 Synchronous and Asynchronous Preemptions 487
10.2.4 Stack Utilization 491
10.2.5 Comparison to Traditional Preemptive Kernels 494
10.3 QK Implementation 496
10.3.1 QK Source Code Organization 497
10.3.2 The `qk.h` Header File 498
10.3.3 Interrupt Processing 503
10.3.4 The `qk_sched.c` Source File (QK Scheduler) 506
10.3.5 The `qk.c` Source File (QK Startup and Idle Loop) 511
10.4 Advanced QK Features 514
10.4.1 Priority-Ceiling Mutex 515
10.4.2 Thread-Local Storage 518
10.4.3 Extended Context Switch (Coprocessor Support) 520
10.5 Porting QK 524
10.5.1 The `qep_port.h` Header File 525
10.5.2 The `qf_port.h` Header File 525
10.5.3 The `qk_port.h` Header File 526
10.5.4 Saving and Restoring FPU Context 531
10.6 Testing the QK Port 531
10.6.1 Asynchronous Preemption Demonstration 531
10.6.2 Priority-Ceiling Mutex Demonstration 535
10.6.3 TLS Demonstration 536
10.6.4 Extended Context Switch Demonstration 539
10.7 Summary 540

Chapter 11: Software Tracing for Event-Driven Systems *541*
11.1 Software Tracing Concepts 542
11.2 Quantum Spy Software-Tracing System 544
11.2.1 Example of a Software-Tracing Session 545
11.2.2 The Human-Readable Trace Output 547
11.3 QS Target Component 550
11.3.1 QS Source Code Organization 552
11.3.2 The QS Platform-Independent Header Files `qs.h` and `qs_dummy.h` .. 553
11.3.3 QS Critical Section 560
11.3.4 General Structure of QS Records 561
11.3.5 QS Filters 562
Global On/Off Filter 562

www.newnespress.com

Local Filters 564
11.3.6 QS Data Protocol 566
Transparency 567
Endianness 568
11.3.7 QS Trace Buffer 569
Initializing the QS Trace Buffer `QS_initBuf()` 569
Byte-Oriented Interface: `QS_getByte()` 571
Block-Oriented Interface: `QS_getBlock()` 573
11.3.8 Dictionary Trace Records 574
Object Dictionaries 575
Function Dictionaries 577
Signal Dictionaries 577
11.3.9 Application-Specific QS Trace Records 578
11.3.10 Porting and Configuring QS 580
11.4 The QSPY Host Application 581
11.4.1 Installing QSPY 582
11.4.2 Building QSPY Application from Sources 584
Building QSPY for Windows with Visual C++ 2005 584
Building QSPY for Windows with MinGW 584
Building QSPY for Linux 584
11.4.3 Invoking QSPY 585
11.5 Exporting Trace Data to MATLAB 587
11.5.1 Analyzing Trace Data with MATLAB 587
11.5.2 MATLAB Output File 589
11.5.3 MATLAB Script `qspy.m` 590
11.5.4 MATLAB Matrices Generated by `qspy.m` 593
11.6 Adding QS Software Tracing to a QP Application 596
11.6.1 Initializing QS and Setting Up the Filters 596
11.6.2 Defining Platform-Specific QS Callbacks 598
11.6.3 Generating QS Timestamps with the `QS_onGetTime()` Callback 601
11.6.4 Generating QS Dictionary Records from Active Objects 604
11.6.5 Adding Application-Specific Trace Records 607
11.6.6 "QSPY Reference Manual" 608
11.7 Summary 608

Chapter 12: QP-nano: How Small Can You Go? 611

12.1 Key Features of QP-nano 612
12.2 Implementing the "Fly 'n' Shoot" example with QP-nano 614
12.2.1 The `main()` function 615
12.2.2 The `qpn_port.h` Header File 618

www.newmaspress.com

12.2.3 Signals, Events, and Active Objects in the "Fly 'n' Shoot" Game 620
12.2.4 Implementing the Ship Active Object in QP-nano 622
12.2.5 Time Events in QP-nano 626
12.2.6 Board Support Package for "Fly 'n' Shoot" Application in QP-nano 628
12.2.7 Building the "Fly 'n' Shoot" QP-nano Application 630
12.3 QP-nano Structure 631
12.3.1 QP-nano Source Code, Examples, and Documentation 633
12.3.2 Critical Sections in QP-nano 634
Task-Level Interrupt Locking 635
ISR-Level Interrupt Locking 635
12.3.3 State Machines in QP-nano 637
12.3.4 Active Objects in QP-nano 640
12.3.5 The System Clock Tick in QP-nano 642
12.4 Event Queues in QP-nano 644
12.4.1 The Ready-Set in QP-nano (`QF_readySet_`) 645
12.4.2 Posting Events from the Task Level (`QActive_post()`) 646
12.4.3 Posting Events from the ISR Level (`QActive_postISR()`) 649
12.5 The Cooperative "Vanilla" Kernel in QP-nano 650
12.5.1 Interrupt Processing Under the "Vanilla" Kernel 655
12.5.2 Idle Processing under the "Vanilla" Kernel 655
12.6 The Preemptive Run-to-Completion QK-nano Kernel 655
12.6.1 QK-nano Interface `qkn.h` 656
12.6.2 Starting Active Objects and the QK-nano Idle Loop 658
12.6.3 The QK-nano Scheduler 660
12.6.4 Interrupt Processing in QK-nano 665
12.6.5 Priority Ceiling Mutex in QK-nano 666
12.7 The PELICAN Crossing Example 666
12.7.1 PELICAN Crossing State Machine 668
12.7.2 The Pedestrian Active Object 671
12.7.3 QP-nano Port to MSP430 with QK-nano Kernel 672
12.7.4 QP-nano Memory Usage 675
12.8 Summary 678

Appendix A. Licensing Policy for QP and QP-nano 679
A.1 Open-Source Licensing 679
A.2 Closed-Source Licensing 680
A.3 Evaluating the Software 680
A.4 NonProfits, Academic Institutions, and Private Individuals 680
A.5 GNU General Public License Version 2 681

www.newnespress.com

Appendix B. Guide to Notation ***685***
B.1 Class Diagrams 685
B.2 State Diagrams 688
B.3 Sequence Diagrams 689
B.4 Timing Diagrams 690

Bibliography ***693***
Index ***699***

www.newnespress.com

Preface

To create a usable piece of software, you have to fight for every fix, every feature, every little accommodation that will get one more person up the curve. There are no shortcuts. Luck is involved, but you don't win by being lucky, it happens because you fought for every inch.
—Dave Winer

For many years, I had been looking for a book or a magazine article that would describe a truly practical way of coding modern state machines (UML[1] statecharts) in a mainstream programming language such as C or C++. I have never found such a technique.

In 2002, I wrote *Practical Statecharts in C/C++: Quantum Programming for Embedded Systems* (*PSiCC*), which was the first book to provide what had been missing thus far: a compact, efficient, and highly maintainable implementation of UML state machines in C and C++ with full support for hierarchical nesting of states. *PSiCC* was also the first book to offer complete C and C++ source code of a generic, state machine-based, real-time application framework for embedded systems.

To my delight, *PSiCC* continues to be one of the most popular books about statecharts and event-driven programming for embedded systems. Within a year of its publication, *PSiCC* was translated into Chinese, and a year later into Korean. I've received and answered literally thousands of e-mails from readers who successfully used the published code in consumer, medical, industrial, wireless, networking, research, defense, robotics, automotive, space exploration, and many other applications worldwide. In 2003 I started to speak about the subject matter at

[1] UML stands for Unified Modeling Language and is the trademark of Object Management Group.

www.newnespress.com

the Embedded Systems Conferences on both U.S. coasts. I also began to consult to companies. All this gave me additional numerous opportunities to find out firsthand how engineers actually use the published design techniques in a wide range of application areas.

What you're holding in your hands is the second edition of *PSiCC*. It is the direct result of the plentiful feedback I've received as well as five years of the "massive parallel testing" and scrutiny that has occurred in the trenches.

What's New in the Second Edition?

As promised in the first edition of *PSiCC*, I continued to advance the code and refine the design techniques. This completely revised second edition incorporates these advancements as well the numerous lessons learned from readers.

New Code

First of all, this book presents an entirely new version of the software, which is now called Quantum Platform (QP) and includes the hierarchical event processor (QEP) and the real-time framework (QF) as well as two new components. QP underwent several quantum leaps of improvement since the first publication six years ago. The enhancements introduced since the first edition of *PSiCC* are too numerous to list here, but the general areas of improvements include greater efficiency and testability and better portability across different processors, compilers, and operating systems. The two new QP components are the lightweight, *preemptive*, real-time kernel (QK) described in Chapter 10 and the software-tracing instrumentation (QS) covered in Chapter 11. Finally, I'm quite excited about the entirely new, ultralight, reduced-feature version of QP called QP-nano that scales the approach down to the lowest-end 8- and 16-bit MCUs. I describe QP-nano in Chapter 12.

Open Source and Dual Licensing

In 2004, I decided to release the entire QP code as open source under the terms of the GNU General Public License (GPL) version 2, as published by the Free Software Foundation. Independent of the open-source licensing, the QP source code is also available under the terms of traditional commercial licenses, which expressly supersede the GPL and are specifically designed for users interested in retaining the proprietary

www.newnespress.com

status of their applications based on QP. This increasingly popular strategy of combining open source with commercial licensing, called *dual licensing*, is explained in more detail in Appendix A.

C as the Primary Language of Exposition

Most of the code samples in the first edition of *PSiCC* pertained to the C++ implementation. However, as I found out in the field, many embedded software developers come from a hardware background (mostly EE) and are often unnecessarily intimidated by C++.

In this edition, I decided to exactly reverse the roles of C and C++. As before, the companion Website contains the complete source code for both C and C++ versions. But now, most of the code examples in the text refer to the C version, and the C++ code is discussed only when the differences between it and the C implementation become nontrivial and important.

As far as the C source code is concerned, I no longer use the C+ object-oriented extension that I've applied and documented in the first edition. The code is still compatible with C+, but the C+ macros are not used.

More Examples

Compared to the first edition, this book presents more examples of event-driven systems and the examples are more complete. I made a significant effort to come up with examples that are not utterly trivial yet don't obscure the general principles in too many details. I also chose examples that don't require any specific domain knowledge, so I don't need to waste space and your attention explaining the problem specification.

Preemptive Multitasking Support

An event-driven infrastructure such as QP can work with a variety of concurrency mechanisms, from a simple "superloop" to fully preemptive, priority-based multitasking. The previous version of QP supported the simple nonpreemptive scheduling natively but required an external RTOS to provide preemptive multitasking, if such capability was required.

In Chapter 10, I describe the new real-time kernel (QK) component that provides deterministic, fully preemptive, priority-based multitasking to QP. QK is a very special,

www.newnespress.com

super-simple, run-to-completion, single-stack kernel that perfectly matches the universally assumed run-to-completion semantics required for state machine execution.

Testing Support

A running application built of concurrently executing state machines is a highly structured affair where all important system interactions funnel through the event-driven framework that ties all the state machines together. By instrumenting just this tiny "funnel" code, you can gain unprecedented insight into the live system. In fact, the software trace data from an instrumented event-driven framework can tell you much more about the application than any traditional real-time operating system (RTOS) because the framework "knows" so much more about the application.

Chapter 11 describes the new QS ("spy") component that provides a comprehensive software-tracing instrumentation to the QP event-driven platform. The trace data produced by the QS component allows you to perform a live analysis of your running real-time embedded system with minimal target system resources and without stopping or significantly slowing down the code. Among other things, you can reconstruct complete sequence diagrams and detailed, timestamped state machine activities for all active objects in the system. You can monitor all event exchanges, event queues, event pools, time events (timers), and preemptions and context switches. You can also use QS to add your own instrumentation to the application-level code.

Ultra-Lightweight QP-nano Version

The event-driven approach with state machines scales down better than any conventional real-time kernel or RTOS. To address really small embedded systems, a reduced QP version called QP-nano implements a subset of features supported in QP/C or QP/C++. QP-nano has been specifically designed to enable event-driven programming with hierarchical state machines on low-end 8- and 16-bit microcontrollers (MCUs), such as AVR, MSP430, 8051, PICmicro, 68HC(S)08, M16C, and many others. Typically, QP-nano requires around 1-2KB of ROM and just a few bytes of RAM per state machine. I describe QP-nano in Chapter 12.

Removed Quantum Metaphor

In the first edition of *PSiCC*, I proposed a quantum-mechanical metaphor as a way of thinking about the event-driven software systems. Though I still believe that this

www.newnespress.com

analogy is remarkably accurate, it hasn't particularly caught on with readers, even though providing such a metaphor is one of the key practices of eXtreme Programming (XP) and other agile methods.

Respecting readers' feedback, I decided to remove the quantum metaphor from this edition. For historical reasons, the word *quantum* still appears in the names of the software components, and the prefix *Q* is consistently used in the code for type and function names to clearly distinguish the QP code from other code, but you don't need to read anything into these names.

What You Need to Use QP

Most of the code supplied with this book is highly portable C or C++, independent of any particular CPU, operating system, or compiler. However, to focus the discussion I provide *executable examples* that run in a DOS console under any variant of Windows. I've chosen the legacy 16-bit DOS as a demonstration platform because it allows programming a standard x86-based PC at the bare-metal level. Without leaving your desktop, you can work with interrupts, directly manipulate CPU registers, and directly access the I/O space. No other modern 32-bit development environment for the standard PC allows this much so easily.

The additional advantage of the legacy DOS platform is the availability of mature and free tools. To that end, I have compiled the examples with the legacy Borland Turbo C++ 1.01 toolset, which is available for a *free download* from Borland.

To demonstrate modern embedded systems programming with QP, I also provide examples for the inexpensive[2] ARM Corterx-M3-based Stellaris EV-LM3S811 evaluation kit form Luminary Micro. The Cortex-M3 examples use the exact same source code as the DOS counterparts and differ only in the board support package (BSP). The Cortex-M3 examples require the 32KB-limited KickStart edition of the IAR EWARM toolset, which is included in the Stellaris kit and is also available for a *free download* from IAR.

Finally, some examples in this book run on Linux as well as any other POSIX-compliant operating system such as BSD, QNX, Max OS X, or Solaris. You can also build the Linux examples on Windows under Cygwin.

[2] At the time of this writing, the EKIEV-LM3S811 kit was available for $49 (`www.luminarymicro.com`).

www.drewnoparts.com

The companion Website to this book at `www.quantum-leaps.com/psicc2` provides the links for downloading all the tools used in the book, as well as other resources. The Website also contains links to dozens of QP ports to various CPUs, operating systems, and compilers. Keep checking this Website; new ports are added frequently.

Intended Audience

This book is intended for the following software developers interested in event-driven programming and modern state machines:

- Embedded programmers and consultants will find a *complete*, ready-to-use, event-driven infrastructure to develop applications. The book describes both state machine coding strategies and, equally important, a compatible real-time framework for executing concurrent state machines. These two elements are synergistically complementary, and one cannot reach its full potential without the other.
- Embedded developers looking for a real-time kernel or RTOS will find that the QP event-driven platform can do everything one might expect from an RTOS and that, in fact, QP actually contains a fully preemptive real-time kernel as well as a simple cooperative scheduler.
- Designers of ultra low-power systems, such as wireless sensor networks, will find how to scale down the event-driven, state machine-based approach to fit the tiniest MCUs. The ultra-light QP-nano version (Chapter 12) combines a hierarchical event processor, a real-time framework, and either a cooperative or a fully preemptive kernel in just 1–2KB of ROM.
- On the opposite end of the complexity spectrum, designers of very large-scale, massively parallel server applications will find that the event-driven approach combined with hierarchical state machines scales up easily and is ideal for managing very large numbers of stateful components, such as client sessions. As it turns out, the "embedded" design philosophy of QP provides the critical per-component efficiency both in time and space.
- The open-source community will find that QP complements other open-source software, such as Linux or BSD. The QP port to Linux (and more generally to POSIX-compliant operating systems) is described in Chapter 8.

www.newnespress.com

- GUI developers and computer game programmers using C or C++ will find that QP very nicely complements GUI libraries. QP provides the high-level "screen logic" based on hierarchical state machines, whereas the GUI libraries handle low-level widgets and rendering of the images on the screen.
- System architects might find in QP a lightweight alternative to heavyweight design automation tools.
- Users of design automation tools will gain deeper understanding of the inner workings of their tools. The glimpse "under the hood" will help them use the tools more efficiently and with greater confidence.

Due to the *code-centric approach*, this book will primarily appeal to software developers tasked with creating actual, working code, as opposed to just modeling. Many books about UML already do a good job of describing model-driven analysis and design as well as related issues, such as software development processes and modeling tools.

This book does *not* provide yet another CASE tool. Instead, this book is about practical, manual coding techniques for hierarchical state machines and about combining state machines into robust event-driven systems by means of a real-time framework.

To benefit from the book, you should be reasonably proficient in C or C++ and have a general understanding of computer architectures. I am not assuming that you have prior knowledge of UML state machines, and I introduce the underlying concepts in a crash course in Chapter 2. I also introduce the basic real-time concepts of multitasking, mutual exclusion, and blocking in Chapter 6.

The Companion Websites

This book has a companion Website at `www.quantum-leaps.com/psicc2` that contains the following information:

- Source code downloads for QP/C, QP/C++, and QP-nano
- All QP ports and examples described in the book
- Reference manuals for QP/C, QP/C++, and QP-nano in HTML and CHM file formats
- Links for downloading compilers and other tools used in the book

www.newnespress.com

- Selected reviews and reader feedback
- Errata

Additionally, the Quantum Leaps Website at `www.quantum-leaps.com` has been supporting the QP user community since the publication of the first edition of *PSiCC* in 2002. This Website offers the following resources:

- Latest QP downloads
- QP ports and development kits
- Programmer manuals
- Application notes
- Resources and goodies such as Visio stencils for drawing UML diagrams, design patterns, links to related books and articles, and more
- Commercial licensing and technical support information
- Consulting and training in the technology
- News and events
- Discussion forum
- Newsletter
- Blog
- Links to related Websites
- And more

Finally, QP is also present on SourceForge.net—the world's largest repository of open source code and applications. The QP project is located at `https://sourceforge.net/projects/qpc/`.

www.newnespress.com

Acknowledgments

First and foremost, I'd like to thank my wonderful family for the unfading support over the years of creating the software and the two editions of this book.

I would also like to thank the team at Elsevier, which includes Rachel Roumeliotis and Heather Scherer, and John (Jay) Donahue.

Finally, I'm grateful to all the software developers who contacted me with thought-provoking questions, bug reports, and countless suggestions for improvements in the code and documentation. As a rule, a software system only gets better if it is used and scrutinized by many people in many different real-life projects.

www.newnespress.com

Introduction

Almost all computer systems in general, and embedded systems in particular, are event-driven, which means that they continuously wait for the occurrence of some external or internal event such as a time tick, an arrival of a data packet, a button press, or a mouse click. After recognizing the event, such systems react by performing the appropriate computation that may include manipulating the hardware or generating "soft" events that trigger other internal software components. (That's why event-driven systems are alternatively called *reactive* systems.) Once the event handling is complete, the software goes back to waiting for the next event.

You are undoubtedly accustomed to the basic sequential control, in which a program waits for events in various places in its execution path by either actively polling for events or passively blocking on a semaphore or other such operating system mechanism. Though this approach to programming event-driven systems is functional in many situations, it doesn't work very well when there are multiple possible sources of events whose arrival times and order you cannot predict and where it is important to handle the events in a timely manner. The problem is that while a sequential program is waiting for one kind of event, it is not doing any other work and is not responsive to other events.

Clearly, what we need is a program structure that can respond to a multitude of possible events, any of which can arrive at unpredictable times and in an unpredictable sequence. Though this problem is very common in embedded systems such as home appliances, cell phones, industrial controllers, medical devices and many others, it is also very common in modern desktop computers. Think about using a Web browser, a word processor, or a spreadsheet. Most of these programs have a modern graphical user interface (GUI), which is clearly capable of handling multiple events. All developers of

www.newnespress.com

modern GUI systems, and many embedded applications, have adopted a common program structure that elegantly solves the problem of dealing with many asynchronous events in a timely manner. This program structure is generally called *event-driven programming*.

Inversion of Control

Event-driven programming requires a distinctly different way of thinking than conventional sequential programs, such as "superloops" or tasks in a traditional RTOS. Most modern event-driven systems are structured according to the *Hollywood principle*, which means "Don't call us, we'll call you." So an event-driven program is *not* in control while waiting for an event; in fact, it's not even active. Only once the event arrives, the program is called to process the event and then it quickly relinquishes the control again. This arrangement allows an event-driven system to wait for many events in parallel, so the system remains responsive to all events it needs to handle.

This scheme has three important consequences. First, it implies that an event-driven system is naturally divided into the application, which actually handles the events, and the supervisory event-driven infrastructure, which waits for events and dispatches them to the application. Second, the control resides in the event-driven infrastructure, so from the application standpoint the control is *inverted* compared to a traditional sequential program. And third, the event-driven application must return control after handling each event, so the execution context cannot be preserved in the stack-based variables and the program counter as it is in a sequential program. Instead, the event-driven application becomes a *state machine*, or actually a set of collaborating state machines that preserve the context from one event to the next in the static variables.

The Importance of the Event-Driven Framework

The *inversion of control*, so typical in all event-driven systems, gives the event-driven infrastructure all the defining characteristics of an *application framework* rather than a toolkit. When you use a toolkit, such as a traditional operating system or an RTOS, you write the main body of the application and call the toolkit code that you want to reuse. When you use a framework, you reuse the main body and write the code *it* calls.

Another important point is that an event-driven framework is actually necessary if you want to combine multiple event-driven state machines into systems. It really takes more than "just" an API, such as a traditional RTOS, to execute concurrent state machines.

www.newnespress.com

State machines require an infrastructure (framework) that provides, at a minimum, run-to-completion (RTC) execution context for each state machine, queuing of events, and event-based timing services. This is really the pivotal point. State machines cannot operate in a vacuum and are not really practical without an event-driven framework.

Active Object Computing Model

This book brings together two most effective techniques of decomposing event-driven systems: hierarchical state machines and an event-driven framework. The combination of these two elements is known as the *active object computing model*. The term *active object* comes from the UML and denotes an autonomous object engaging other active objects asynchronously via events. The UML further proposes the UML variant of statecharts with which to model the behavior of event-driven active objects.

In this book, active objects are implemented by means of the event-driven framework called QF, which is the main component of the QP event-driven platform. The QF framework orderly executes active objects and handles all the details of thread-safe event exchange and processing within active objects. QF guarantees the universally assumed RTC semantics of state machine execution, by queuing events and dispatching them sequentially (one at a time) to the internal state machines of active objects.

The fundamental concepts of hierarchical state machines combined with an event-driven framework are not new. In fact, they have been in widespread use for at least two decades. Virtually all commercially successful design automation tools on the market today are based on hierarchical state machines (statecharts) and incorporate internally a variant of an event-driven, real-time framework similar to QF.

The Code-Centric Approach

The approach I assume in this book is *code-centric*, minimalist, and low-level. This characterization is not pejorative; it simply means that you'll learn how to map hierarchical state machines and active objects directly to C or C++ source code, without big tools. The issue here is not a tool—the issue is understanding.

The modern design automation tools are truly powerful, but they are not for everyone. For many developers the tool simply can't pull its own weight and gets abandoned. For such developers, the code-centric approach presented in this book can provide a lightweight alternative to the heavyweight tools.

codeespresso.com

Most important, though, no tool can replace conceptual understanding. For example, determining which exit and entry actions fire in which sequence in a nontrivial state transition is not something you should discover by running a tool-supported animation of your state machine. The answer should come from your understanding of the underlying state machine implementation (discussed in Chapters 3 and 4). Even if you later decide to use a design automation tool and even if that particular tool would use a different statechart implementation technique than discussed in this book, you will still apply the concepts with greater confidence and more efficiency because of your understanding of the fundamental mechanisms at a low level.

In spite of many pressures from existing users, I persisted in keeping the QP event-driven platform lean by directly implementing only the essential elements of the bulky UML specification and supporting the niceties as design patterns. Keeping the core implementation small and simple has real benefits. Programmers can learn and deploy QP quickly without large investments in tools and training. They can easily adapt and customize the framework's source code to the particular situation, including to severely resource-constrained embedded systems. They can understand, and indeed regularly use, all the provided features.

Focus on Real-Life Problems

You can't just look at state machines and the event-driven framework as a collection of features, because some of the features will make no sense in isolation. You can only use these powerful concepts effectively if you are thinking about design, not simply coding. And to understand state machines that way, you must understand the problems with event-driven programming in general.

This book discusses event-driven programming problems, why they are problems, and how state machines and active object computing model can help. Thus, I begin most chapters with the programming problems the chapter will address. In this way, I hope to move you, a little at a time, to the point where hierarchical state machines and the event-driven framework become a much more natural way of solving the problems than the traditional approaches such as deeply nested `IF`s and `ELSE`s for coding stateful behavior or passing events via semaphores or event flags of a traditional RTOS.

www.newnespress.com

Object Orientation

Even though I use C as the primary programming language, I also extensively use object-oriented design principles. Like virtually all application frameworks, QP uses the basic concepts of encapsulation (classes) and single inheritance as the primary mechanisms of customizing, specializing, and extending the framework to a particular application. Don't worry if these concepts are new to you, especially in C. At the C language level, encapsulation and inheritance become just simple coding idioms, which I introduce in Chapter 1. I specifically avoid polymorphism in the C version because implementing late binding in C is a little more involved. Of course, the C++ version uses classes and inheritance directly and QP/C++ applications can use polymorphism.

More Fun

When you start using the techniques described in this book, your problems will change. You will no longer struggle with 15 levels of convoluted `if-else` statements, and you will stop worrying about semaphores or other such low-level RTOS mechanisms. Instead, you'll start thinking at a *higher level of abstraction* about state machines, events, and active objects. After you experience this quantum leap you will find, as I did, that programming can be much more *fun*. You will never want to go back to the "spaghetti" code or the raw RTOS.

How to Contact Me

If you have comments or questions about this book, the code, or event-driven programming in general, I'd be pleased to hear from you. Please e-mail me at `miro@quantum-leaps.com`.

www.newnespress.com

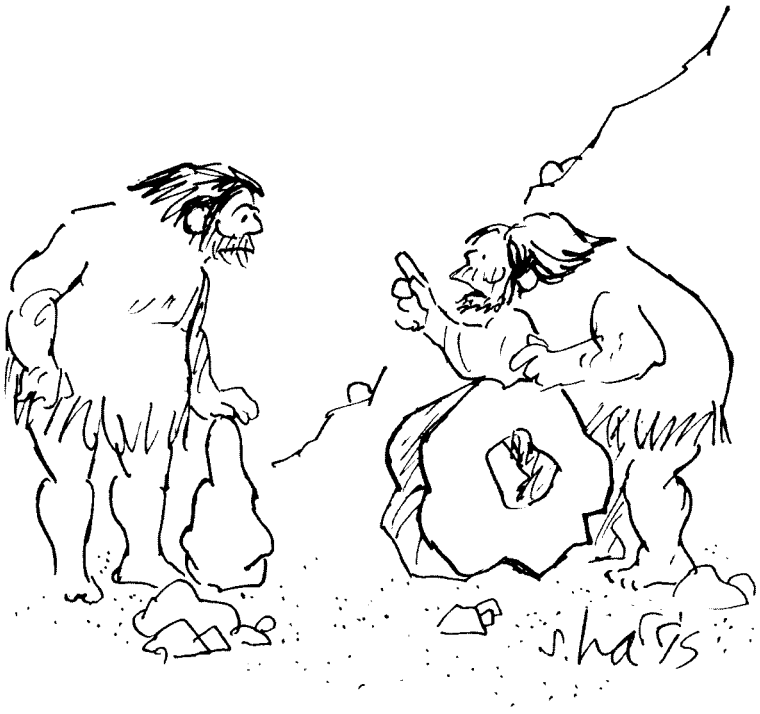

"IT MAY NOT BE A PERFECT WHEEL, BUT IT'S A STATE-OF-THE-ART WHEEL."

www.CartoonStock.com

PART I UML STATE MACHINES

State machines are the best-known formalism for specifying and implementing event-driven systems that must react to incoming events in a timely fashion. The advanced UML state machines represent the current state of the art in state machine theory and notation.

Part I of this book shows practical ways of using UML state machines in event-driven applications to help you produce efficient and maintainable software with well-understood behavior, rather than creating "spaghetti" code littered with convoluted IFs and ELSEs. Chapter 1 presents an overview of the method based on a working example.

Chapter 2 introduces state machine concepts and the UML notation. Chapter 3 shows the standard techniques of coding state machines, and Chapter 4 describes a generic hierarchical event processor. Part I concludes with Chapter 5, which presents a mini-catalogue of five state design patterns. You will learn that UML state machines are a powerful design method that you can use, even without complex code-synthesizing tools.

www.newnes.com

CHAPTER 1

Getting Started with UML State Machines and Event-Driven Programming

It is common sense to take a method and try it. If it fails, admit it frankly and try another. But above all, try something.
—Franklin D. Roosevelt

This chapter presents an example project implemented entirely with UML state machines and the event-driven paradigm. The example application is an interactive "Fly 'n' Shoot"-type game, which I decided to include early in the book so that you can start playing (literally) with the code as soon as possible. My aim in this chapter is to show the essential elements of the method in a real, nontrivial program, but without getting bogged down in details, rules, and exceptions. At this point, I am not trying to be complete or even precise, although this example as well as all other examples in the book is meant to show a good design and the recommended coding style. I don't assume that you know much about UML state machines, UML notation, or event-driven programming. I will either briefly introduce the concepts, as needed, or refer you to the later chapters of the book for more details.

The example "Fly 'n' Shoot" game is based on the Quickstart application provided in source code with the Stellaris EV-LM3S811 evaluation kit from Luminary Micro [Luminary 06]. I was trying to make the "Fly 'n' Shoot" example behave quite similarly to the original Luminary Micro Quickstart application so that you can directly compare the event-driven approach with the traditional solution to essentially the same problem specification.

www.newnespress.com

1.1 Installing the Accompanying Code

The companion Website to this book at www.quantum-leaps.com/psicc2 contains the self-extracting archive with the complete source code of the QP event-driven platform and all executable examples described in this book; as well as documentation, development tools, resources, and more. You can uncompress the archive into any directory. The installation directory you choose will be referred henceforth as the QP Root Directory `<qp>`.

NOTE

Although in the text I mostly concentrate on the C implementation, the accompanying Website also contains the equivalent C++ version of virtually every element available in C. The C++ code is organized in exactly the same directory tree as the corresponding C code, except you need to look in the `<qp>\qpcpp\...` directory branch.

Specifically to the "Fly 'n' Shoot" example, the companion code contains two versions[1] of the game. I provide a DOS version for the standard Windows-based PC (see Figure 1.1) so that you don't need any special embedded board to play the game and experiment with the code.

NOTE

I've chosen the legacy 16-bit DOS platform because it allows programming a standard PC at the bare-metal level. Without leaving your desktop, you can work with interrupts, directly manipulate CPU registers, and directly access the I/O space. No other modern 32-bit development environment for the standard PC allows this much so easily. The ubiquitous PC running under DOS (or a DOS console within any variant of Windows) is as close as it gets to emulating embedded software development on the commodity 80x86 hardware. Additionally, you can use free, mature tools, such as the Borland C/C++ compiler.

I also provide an embedded version for the inexpensive[2] ARM Cortex-M3-based Stellaris EV-LM3S811 evaluation kit (see Figure 1.2). Both the PC and Cortex-M3

[1] The accompanying code actually contains many more versions of the "Fly 'n' Shoot" game, but they are not relevant at this point.

[2] At the time of this writing the EV-LM3S811 kit was available for $49 (www.luminarymicro.com).

www.newnespress.com

versions use the exact same source code for all application components and differ only in the Board Support Package (BSP).

1.2 Let's Play

The following description of the "Fly 'n' Shoot" game serves the dual purpose of explaining how to play the game and as the problem specification for the purpose of designing and implementing the software later in the chapter. To accomplish these two goals I need to be quite detailed, so please bear with me.

Your objective in the game is to navigate a spaceship through an endless horizontal tunnel with mines. Any collision with the tunnel or the mine destroys the ship. You can move the ship up and down with Up-arrow and Down-arrow keys on the PC (see Figure 1.1) or via the potentiometer wheel on the EV-LM3S811 board (see Figure 1.2). You can also fire a missile to destroy the mines in the tunnel by pressing the Spacebar on the PC or the User button on the EV-LM3S811 board. Score accumulates for survival (at the rate of 30 points per second) and destroying the mines. The game lasts for only one ship.

The game starts in a demo mode, where the tunnel walls scroll at the normal pace from right to left and the "Press Button" text flashes in the middle of the screen. You need to generate the "fire missile" event for the game to begin (press Spacebar on the PC or the User button on the EV-LM3S811 board).

You can have only one missile in flight at a time, so trying to fire a missile while it is already flying has no effect. Hitting the tunnel wall with the missile brings you no points, but you earn extra points for destroying the mines.

The game has two types of mines with different behavior. In the original Luminary Quickstart application both types of mines behave the same, but I wanted to demonstrate how state machines can elegantly handle differently behaving mines.

Mine type 1 is small, but can be destroyed by hitting any of its pixels with the missile. You earn 25 points for destroying a mine type 1. Mine type 2 is bigger but is nastier in that the missile can destroy it only by hitting its center, not any of the "tentacles." Of course, the ship is vulnerable to the whole mine. You earn 45 points for destroying a mine type 2.

When you crash the ship, by either hitting a wall or a mine, the game ends and displays the flashing "Game Over" text as well as your final score. After 5 seconds of flashing,

www.newnespress.com

the "Game Over" screen changes back to the demo screen, where the game waits to be started again.

Additionally the application contains a screen saver because the OLED display of the original EV-LM3S811 board has burn-in characteristics similar to a CRT. The screen saver only becomes active if 20 seconds elapse in the demo mode without starting the game (i.e., the screen saver never appears during game play). The screen saver is a simple random pixel type rather than the "Game of Life" algorithm used in the original Luminary Quickstart application. I've decided to simplify this aspect of the implementation because the more elaborate pixel-mixing algorithm does not contribute any new or interesting behavior.

After a minute of running the screen saver, the display turns blank and only a single random pixel shows on the screen. Again, this is a little different from the original Quickstart application, which instead blanks the screen and starts flashing the User LED. I've changed this behavior because I have a better purpose for the User LED (to visualize the activity of the idle loop).

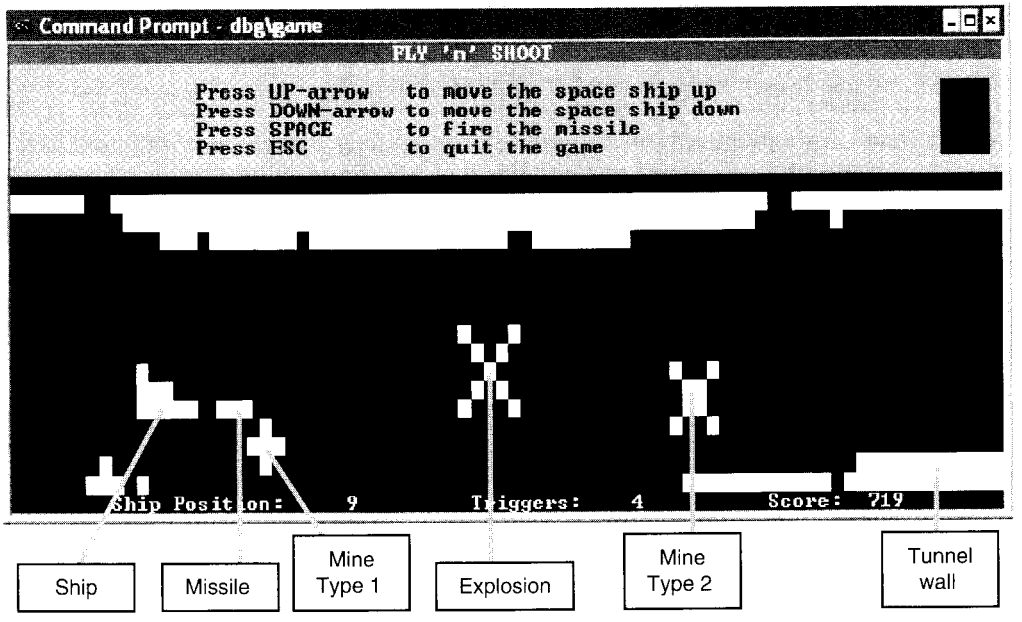

Figure 1.1: The "Fly 'n' Shoot" game running in a DOS window under Windows XP.

www.newnespress.com

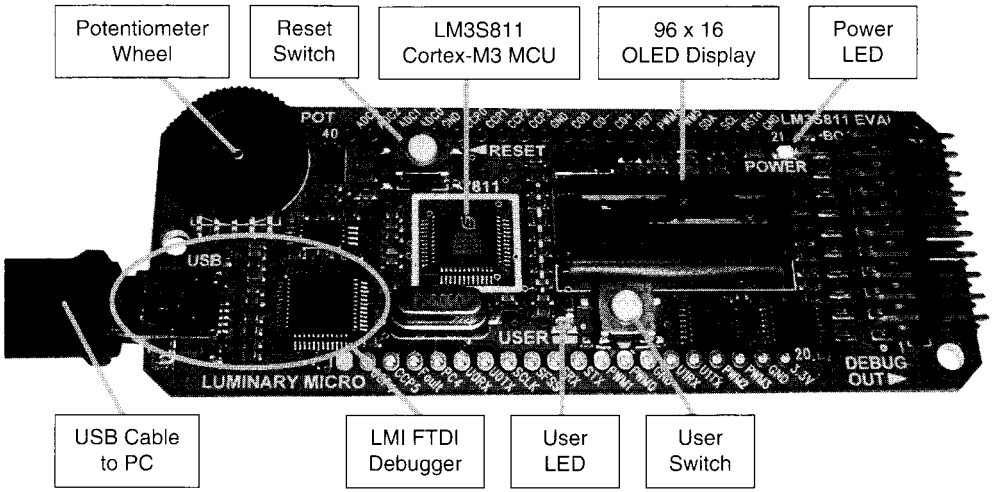

Figure 1.2: The "Fly 'n' Shoot" game running on the Stellaris EV-LM3S811 evaluation board.

1.2.1 Running the DOS Version

The "Fly 'n' Shoot" sample code for the DOS version (in C) is located in the `<qp>\qpc\examples\80x86\dos\tcpp101\l\game\` directory, where `<qp>` stands for the installation directory in which you chose to install the accompanying software.

The compiled executable is provided, so you can run the game on any Windows-based PC by simply double-clicking the executable `game.exe` located in the directory `<qp>\qpc\examples\80x86\dos\tcpp101\l\game\dbg\`. The first screen you see is the game running in the demo mode with the text "Push Button" flashing in the middle of the display. At the top of the display you see a legend of keystrokes recognized by the application. You need to hit the SPACEBAR to start playing the game. Press the ESC key to cleanly exit the application.

If you run "Fly 'n' Shoot" in a window under Microsoft Windows, the animation effects in the game might appear a little jumpy, especially compared to the Stellaris version of the same game. You can make the application execute significantly more smoothly if you switch to the full-screen mode by pressing and holding the Alt key and then pressing the Enter key. You go back to the window mode via the same Alt-Enter key combination.

As you can see in Figure 1.1, the DOS version uses simply the standard VGA text mode to emulate the OLED display of the EV-LM3S811 board. The lower part of the DOS screen

www.newnespress.com

is used as a matrix of 80 × 16 character-wide "pixels," which is a little less than the 96 × 16 pixels of the OLED display but still good enough to play the game. I specifically avoid employing any fancier graphics in this early example because I have bigger fish to fry for you than to worry about the irrelevant complexities of programming graphics.

My main goal is to make it easy for you to understand the event-driven code and experiment with it. To this end, I chose the legacy Borland Turbo C++ 1.01 toolset to build this example as well as several other examples in this book. Even though Turbo C++ 1.01 is an older compiler, it is adequate to demonstrate all features of both the C and C++ versions. Best of all, it is available for a free download from the Borland "Museum" at http://bdn.borland.com/article/0,1410,21751,00.html.

The toolset is very easy to install. After you download the Turbo C++ 1.01 files directly from Borland, you need to unzip the files onto your hard drive. Then you run the `INSTALL.EXE` program and follow the installation instructions it provides.

NOTE

I strongly recommend that you install the Turbo C++ 1.01 toolset into the directory `C:\tools\tcpp101\`. That way you will be able to directly use the provided project files and make scripts.

Perhaps the easiest way to experiment with the "Fly 'n' Shoot" code is to launch the Turbo C++ IDE (`TC.EXE`) and open the provided project file `GAME-DBG.PRJ`, which is located in the directory `<qp>\qpc\examples\80x86\dos\tcpp101\l\game\`. You can modify, recompile, execute, and debug the program directly from the IDE. However, you should avoid terminating the program stopped in the debugger, because this will not restore the standard DOS interrupt vectors for the time tick and keyboard interrupts. You should always cleanly exit the application by letting it freely run and pressing the Esc key.

The next section briefly describes how to run the embedded version of the game. If you are not interested in the Cortex-M3 version, feel free to skip to Section 1.3, where I start explaining the application code.

1.2.2 Running the Stellaris Version

In contrast to the "Fly 'n' Shoot" version for DOS running in the ancient real mode of the 80x86 processor, the exact same source code runs on one of the most modern processors in the industry: the ARM Cortex-M3.

The sample code for the Stellaris EV-LM3S811 board is located in the `<qp>\qpc\examples\cortex-m3\vanilla\iar\game-ev-lm3s811\` directory, where `<qp>` stands for the root directory in which you chose to install the accompanying software.

The code for the Stellaris kit has been compiled with the 32KB-limited Kickstart edition of the IAR Embedded Workbench for ARM (IAR EWARM) v 5.11, which is provided with the Stellaris EV-LM3S811 kit. You can also download this software free of charge directly from IAR Systems (www.iar.com) after filling out an online registration.

The installation of IAR EWARM is quite straightforward, since the software comes with the installation utility. You also need to install the USB drivers for the hardware debugger built into the EV-LM3S811 board, as described in the documentation of the Stellaris EV-LM3S811 kit.

NOTE

I strongly recommend that you install the IAR EWARM toolset into the directory `C:\tools\iar\arm_ks_5.11`. That way you will be able to directly use the provided EWARM workspace files and make scripts.

Before you program the "Fly 'n' Shoot" game to the EV-LM3S811 board, you might want to play a little with the original Quickstart application that comes preprogrammed with the EV-LM3S811 kit.

To program the "Fly 'n' Shoot" game to the Flash memory of the EV-LM3S811 board, you first connect the EV-LM3S811 board to your PC with the USB cable provided in the kit and make sure that the Power LED is on (see Figure 1.2). Next, you need to launch the IAR Embedded Workbench and open the workspace `game-ev-lm3s811.eww` located in the `<qp>\qpc\examples\cortex-m3\vanilla\iar\game-ev-lm3s811\` directory. At this point your screen should look similar to the screenshot shown in Figure 1.3.

The `game-ev-lm3s811` project is set up to use the LMI FTDI debugger, which is the piece of hardware integrated on the EV-LM3S811 board (see Figure 1.2). You can verify this setup by opening the "Options" dialog box via the Project | Options menu. Within the "Options" dialog box, you need to select the Debugger category in the panel on the left. While you're at it, you could also verify that the Flash loading is enabled by selecting the "Download" tab. The checked "Use flash loader(s)" check box means

that the Flash loader application provided by IAR will be first loaded to the RAM of the MCU, and this application will program the Flash with the image of your application.

To start the Flash programming process, select the Project | Debug menu, or simply click the Debug button (see Figure 1.3) in the toolbar. The IAR Workbench should respond by showing the Flash programming progress bar for several seconds, as shown in Figure 1.3. Once the Flash programming completes, the IAR EWARM switches to the IAR C-Spy debugger and the program should stop at the entry to `main()`. You can start playing the game either by clicking the Go button in the debugger or you can close the debugger and reset the board by pressing the Reset button. Either way, the "Fly 'n' Shoot" game is now permanently programmed into the EV-LM3S811 board and will start automatically on every powerup.

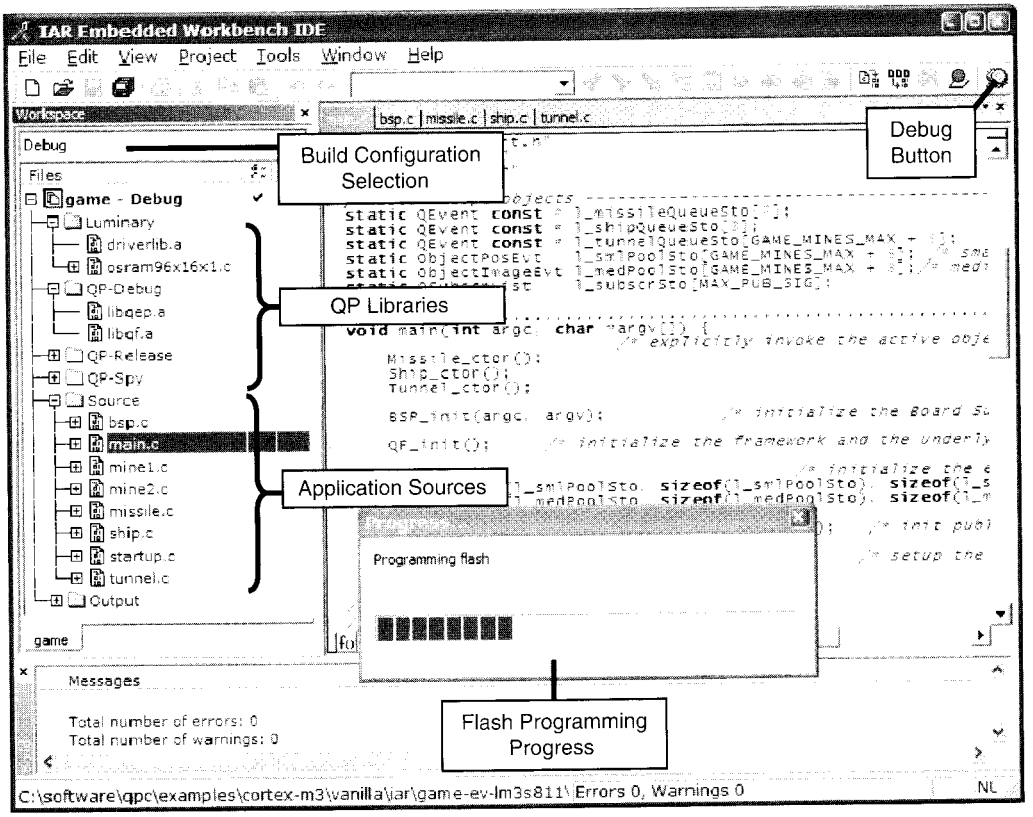

Figure 1.3: Loading the "Fly 'n' Shoot" game into the flash of LM3S811 MCU with IAR EWARM IDE.

www.newnespress.com

The IAR Embedded Workbench environment allows you to experiment with the "Fly 'n' Shoot" code very easily. You can edit the files and recompile the application at a click of a button (F7). The only caveat is that the first time after the installation of the IAR toolset you need to build the Luminary Micro driver library for the LM3S811 MCU from the sources. You accomplish this by loading the workspace `ek-lm3s811.eww` located in the directory `<IAR-EWARM>\ARM\examples\Luminary\Stellaris\boards\ek-lm3s811`, where `<IAR-EWARM>` stands for the directory name where you've installed the IAR toolset. In the `ev-lm3s811.eww` workspace, you select the "`driverlib - Debug`" project from the drop-down list at the top of the Workspace panel and then press F7 to build the library.

1.3 The main() Function

Perhaps the best place to start the explanation of the "Fly 'n' Shoot" application code is the `main()` function, located in the file `main.c`. Unless indicated otherwise in this chapter, you can browse the code in either the DOS version or the EV-LM3S811 version, because the application source code is identical in both. The complete `main.c` file is shown in Listing 1.1.

NOTE

To explain code listings, I place numbers in parentheses at the interesting lines in the left margin of the listing. I then use these labels in the left margin of the explanation section that immediately follows the listing. Occasionally, to unambiguously refer to a line of a particular listing from sections of text other than the explanation section, I use the full reference consisting of the listing number followed by the label. For example, Listing 1.1(21) refers to the label (21) in Listing 1.1.

Listing 1.1 The file `main.c` of the "Fly 'n' Shoot" game application

```
(1)  #include "qp_port.h"                                        /* the QP port */
(2)  #include "bsp.h"                                     /* Board Support Package */
(3)  #include "game.h"                                        /* this application */

     /* Local-scope objects -----------------------------------------------*/
(4)  static QEvent const * l_missileQueueSto[2];                  /* event queue */
(5)  static QEvent const * l_shipQueueSto[3];                     /* event queue */
(6)  static QEvent const * l_tunnelQueueSto[GAME_MINES_MAX + 5];  /* event queue */
```

Continued onto next page

www.newnespress.com

```
 (7)  static ObjectPosEvt   l_smlPoolSto[GAME_MINES_MAX + 8]; /* small-size pool */
 (8)  static ObjectImageEvt l_medPoolSto[GAME_MINES_MAX + 8]; /* medium-size pool */
 (9)  static QSubscrList    l_subscrSto[MAX_PUB_SIG];       /* publish-subscribe */

      /*..............................................................*/
      void main(int argc, char *argv[]) {
                                  /* explicitly invoke the active objects' ctors... */
(10)      Missile_ctor();
(11)      Ship_ctor();
(12)      Tunnel_ctor();

(13)      BSP_init(argc, argv);          /* initialize the Board Support Package */
(14)      QF_init();    /* initialize the framework and the underlying RT kernel */

                                                /* initialize the event pools... */
(15)      QF_poolInit(l_smlPoolSto, sizeof(l_smlPoolSto), sizeof(l_smlPoolSto[0]));
(16)      QF_poolInit(l_medPoolSto, sizeof(l_medPoolSto), sizeof(l_medPoolSto[0]));

(17)      QF_psInit(l_subscrSto, Q_DIM(l_subscrSto)); /* init publish-subscribe */

                                                 /* start the active objects... */
(18)      QActive_start(AO_Missile, /* global pointer to the Missile active object */
                        1,                                   /* priority (lowest) */
                        l_missileQueueSto, Q_DIM(l_missileQueueSto), /* evt queue */
                        (void *)0, 0,                      /* no per-thread stack */
                        (QEvent *)0);                  /* no initialization event */
(19)      QActive_start(AO_Ship,     /* global pointer to the Ship active object */
                        2,                                            /* priority */
                        l_shipQueueSto,   Q_DIM(l_shipQueueSto),   /* evt queue */
                        (void *)0, 0,                      /* no per-thread stack */
                        (QEvent *)0);                  /* no initialization event */
(20)      QActive_start(AO_Tunnel, /* global pointer to the Tunnel active object */
                        3,                                            /* priority */
                        l_tunnelQueueSto, Q_DIM(l_tunnelQueueSto), /* evt queue */
                        (void *)0, 0,                      /* no per-thread stack */
                        (QEvent *)0);                  /* no initialization event */

(21)      QF_run();                                       /* run the QF application */
      }
```

(1) The "Fly 'n' Shoot" game is an example of an application implemented with the QP event-driven platform. Every application C-file that uses QP must include the `qp_port.h` header file. This header file contains the specific adaptation of QP to the given processor, operating system, and compiler, which is called a *port*. Each QP port is located in a separate directory, and the C compiler finds the right `qp_port.h` header file through the include search path provided to the compiler

(typically via the –I compiler option). That way I don't need to change the application source code to recompile it for a different processor or compiler. I only need to instruct the compiler to look in a different QP port directory for the `qp_port.h` header file. For example, the DOS version includes the `qp_port.h` header file from the directory `<qp>\qpc\`**`ports`**`\80x86\dos\tcpp101\l\`, and the EV-LM3S811 version from the directory `<qp>\qpc\`**`ports`**`\cortex-m3\vanilla\iar\`.

(2) The `bsp.h` header file contains the interface to the Board Support Package and is located in the application directory.

(3) The `game.h` header file contains the declarations of events and other facilities shared among the components of the application. I will discuss this header file in the upcoming Section 1.7. This header file is located in the application directory.

The QP event-driven platform is a collection of components, such as the QEP event processor that executes state machines according to the UML semantics and the QF real-time framework that implements the active object computing model. Active objects in QF are encapsulated state machines (each with an event queue, a separate task context, and a unique priority) that communicate with one another asynchronously by sending and receiving events, whereas QF handles all the details of thread-safe event exchange and queuing. Within an active object, the events are processed by the QEP event processor sequentially in a run-to-completion (RTC) fashion, meaning that processing of one event must necessarily complete before processing the next event. (See also Section 6.3.3 in Chapter 6.)

(4-6) The application must provide storage for the event queues of all active objects used in the application. Here the storage is provided at compile time through the statically allocated arrays of immutable `(const)` pointers to events, because QF event queues hold just pointers to events, not events themselves. Events are represented as instances of the `QEvent` structure declared in the `qp_port.h` header file. Each event queue of an active object can have a different size, and you need to decide this size based on your knowledge of the application. Event queues are discussed in Chapters 6 and 7.

(7,8) The application must also provide storage for event pools that the framework uses for fast and deterministic dynamic allocation of events. Each event pool

www.newnespress.com

can provide only fixed-size memory blocks. To avoid wasting memory by using oversized blocks for small events, the QF framework can manage up to three event pools of different block sizes (for small, medium, and large events). The "Fly 'n' Shoot" application uses only two out of the three possible event pools (the small and medium pools).

The QF real-time framework supports two event delivery mechanisms: the simple direct event posting to active objects and the more advanced mechanism called *publish-subscribe* that decouples event producers from the consumers. In the publish-subscribe mechanism, active objects subscribe to events by the framework. Event producers publish the events to the framework. Upon each publication request, the framework delivers the event to all active objects that had subscribed to that event type. One obvious implication of publish-subscribe is that the framework must store the subscriber information, whereas it must be possible to handle multiple subscribers to any given event type. The event delivery mechanisms are described in Chapters 6 and 7.

(9) The "Fly 'n' Shoot" application uses the publish-subscribe event delivery mechanism supported by QF, so it needs to provide the storage for the subscriber lists. The subscriber lists remember which active objects have subscribed to which events. The size of the subscriber database depends on both the number of published events, which is specified in the `MAX_PUB_SIG` constant found in the `game.h` header file, and the maximum number of active objects allowed in the system, which is determined by the QF configuration parameter `QF_MAX_ACTIVE`.

(10-12) These functions perform an early initialization of the active objects in the system. They play the role of static "constructors," which in C you need to invoke explicitly. (C++ calls such static constructors implicitly before entering `main()`).

(13) The function `BSP_init()` initializes the board and is defined in the `bsp.c` file.

(14) The function `QF_init()` initializes the QF component and the underlying RTOS/kernel, if such software is used. You need to call `QF_init()` before you invoke any QF services.

(15,16) The function `QF_poolInit()` initializes the event pools. The parameters of this function are the pointer to the event pool storage, the size of this storage,

www.newnes.com

and the block-size of this pool. You can call this function up to three times to initialize up to three event pools. The subsequent calls to `QF_poolInit()` must be made in the increasing order of block size. For instance, the small block-size pool must be initialized before the medium block-size pool.

(17) The function `QF_poolInit()` initializes the publish-subscribe event delivery mechanism of QF. The parameters of this function are the pointer to the subscriber-list array and the dimension of this array.

The utility macro `Q_DIM(a)` provides the dimension of a one-dimensional array `a[]` computed as `sizeof(a)/sizeof(a[0])`, which is a compile-time constant. The use of this macro simplifies the code because it allows me to eliminate many `#define` constants that otherwise I would need to provide for the dimensions of various arrays. I can simply hard-code the dimension right in the definition of an array, which is the only place that I specify it. I then use the macro `Q_DIM()` whenever I need this dimension in the code.

(18-20) The function `QActive_start()` tells the QF framework to start managing an active object as part of the application. The function takes the following parameters: the pointer to the active object structure, the priority of the active object, the pointer to its event queue, the dimension (length) of that queue, and three other parameters that I explain in Chapter 7 (they are not relevant at this point). The active object priorities in QF are numbered from 1 to `QF_MAX_ACTIVE`, inclusive, where a higher-priority number denotes higher urgency of the active object. The constant `QF_MAX_ACTIVE` is defined in the QF port header file `qf_port.h` and currently cannot exceed 63.

I like to keep the code and data of every active object strictly encapsulated within its own C-file. For example, all code and data for the active object Ship are encapsulated in the file `ship.c`, with the external interface consisting of the function `Ship_ctor()` and the pointer `AO_Ship`.

(21) At this point, you have provided to the framework all the storage and information it needs to manage your application. The last thing you must do is call the function `QF_run()` to pass the control to the framework.

After the call to `QF_run()` the framework is in full control. The framework executes the application by calling your code, not the other way around. The function `QF_run()` never returns the control back to `main()`. In the DOS version of the

www.newnespress.com

"Fly 'n' Shoot" game, you can terminate the application by pressing the Esc key, in which case `QF_run()` exits to DOS but not to `main()`. In an embedded system, such as the Stellaris board, `QF_run()` runs forever or till the power is removed, whichever comes first.

NOTE

For best cross-platform portability, the source code consistently uses the *UNIX end-of-line convention* (lines are terminated with LF only, 0xA character). This convention seems to be working for all C/C++ compilers and cross-compilers, including legacy DOS-era tools. In contrast, the DOS/Windows end-of-line convention (lines terminated with the CR,LF, or 0xD,0xA pair of characters) is known to cause problems on UNIX-like platforms, especially in the multiline preprocessor macros.

1.4 The Design of the "Fly 'n' Shoot" Game

To proceed further with the explanation of the "Fly 'n' Shoot" application, I need to step up to the design level. At this point I need to explain how the application has been decomposed into the active objects and how these objects exchange events to collectively deliver the functionality of the "Fly 'n' Shoot" game.

In general, the decomposition of a problem into active objects is not trivial. As usual in any decomposition, your goal is to achieve possibly loose coupling among the active object components (ideally no sharing of any resources), and you also strive for minimizing the communication in terms of the frequency and size of exchanged events.

In the case of the "Fly 'n' Shoot" game, I need to first identify all objects with reactive behavior (i.e., with a state machine). I applied the simplest object-oriented technique of identifying objects, which is to pick the frequently used nouns in the problem specification. From Section 1.2, I identified Ship, Missile, Mines, and Tunnel. However, not every state machine in the system needs to be an active object (with a separate task context, an event queue, and a unique priority level), and merging them is a valid option when performance or space is needed. As an example of this idea, I ended up merging the Mines into the Tunnel active object, whereas I preserved the Mines as independent state machine components of the Tunnel active object. By doing so I applied the "Orthogonal Component" design pattern described in Chapter 5.

www.newnespress.com

The next step in the event-driven application design is assigning responsibilities and resources to the identified active objects. The general design strategy for avoiding sharing of resources is to encapsulate each resource inside a dedicated active object and to let that object manage the resource for the rest of the application. That way, instead of sharing the resource directly, the rest of the application shares the dedicated active object via events.

So, for example, I decided to put the Tunnel active object in charge of the display. Other active objects and state machine components, such as Ship, Missile, and Mines, don't draw on the display directly, but rather send events to the Tunnel object with the request to render the Ship, Missile, or Mine bitmaps at the provided (x, y) coordinates of the display.

With some understanding of the responsibilities and resource allocations to active objects I can move on to devising the various scenarios of event exchanges among the objects. Perhaps the best instrument to aid the thinking process at this stage is the UML *sequence diagram*, such as the diagram depicted in Figure 1.4. This particular sequence diagram shows the most common event exchange scenarios in the "Fly 'n' Shoot" game (the primary use cases, if you will). The explanation section immediately following the diagram illuminates the interesting points.

NOTE

A UML sequence diagram like Figure 1.4 has two dimensions. Horizontally arranged boxes represent the various objects participating in the scenario, whereas heavy borders indicate active objects. As usual in the UML, the object name is underlined. Time flows down the page along the vertical dashed lines descending from the objects. Events are represented as horizontal arrows originating from the sending object and terminating at the receiving object. Optionally, thin rectangles around instance lines indicate focus of control.

NOTE

To explain diagrams, I place numbers in parentheses at the interesting elements of the diagram. I then use these labels in the left margin of the explanation section that immediately follows the diagram. Occasionally, to unambiguously refer to a specific element of a particular diagram from sections of text other than the explanation section, I use the full reference consisting of the figure number followed by the label. For example, Figure 1.4(12) refers to the element (12) in Figure 1.4.

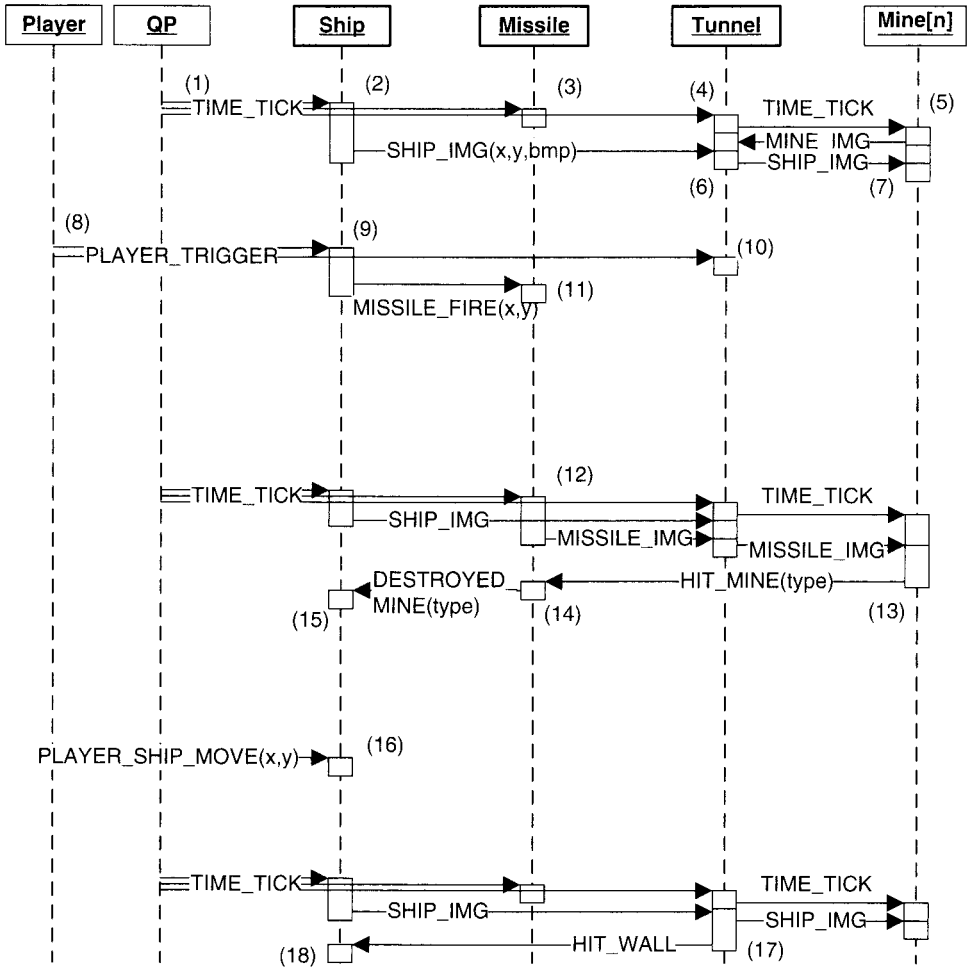

Figure 1.4: The sequence diagram of the "Fly 'n' Shoot" game.

(1) The `TIME_TICK` is the most important event in the game. This event is generated by the QF framework from the system time tick interrupt at a rate of 30 times per second, which is needed to drive a smooth animation of the display. Because the `TIME_TICK` event is of interest to virtually all objects in the application, it is published by the framework to all active objects. (The publish-subscribe event delivery in QF is described in Chapter 6.)

(2) Upon reception of the `TIME_TICK` event, the Ship object advances its position by one step and posts the event `SHIP_IMG(x, y, bmp)` to the Tunnel object. The

www.newnespress.com

`SHIP_IMG` event has parameters *x* and *y*, which are the coordinates of the Ship on the display, as well as the bitmap number *bmp* to draw at these coordinates.

(3) The Missile object is not in flight yet, so it simply ignores the `TIME_TICK` event this time.

(4) The Tunnel object performs the heaviest lifting for the `TIME_TICK` event. First, Tunnel redraws the entire display from the current frame buffer. This action, performed 30 times per second, provides the illusion of animation of the display. Next, the Tunnel clears the frame buffer and starts filling it up again for the next time frame. The Tunnel advances the tunnel walls by one step and copies the walls to the frame buffer. The Tunnel also dispatches the `TIME_TICK` event to all its Mine state machine components.

(5) Each Mine advances its position by one step and posts the `MINE_IMG(x, y, bmp)` event to the Tunnel to render the appropriate Mine bitmap at the position (*x*, *y*) in the current frame buffer. Mines of type 1 send the bitmap number `MINE1_BMP`, whereas mines of type 2 send `MINE2_BMP`.

(6) Upon receipt of the `SHIP_IMG(x, y, bmp)` event from the Ship, the Tunnel object renders the specified bitmap in the frame buffer and checks for any collision between the ship bitmap and the tunnel walls. Tunnel also dispatches the original `SHIP_IMG(x, y, bmp)` event to all active Mines.

(7) Each Mine determines whether the Ship is in collision with that Mine.

(8) The `PLAYER_TRIGGER` event is generated when the Player reliably presses the button (button press is debounced). This event is published by the QF framework and is delivered to the Ship and Tunnel objects, which both subscribe to the `PLAYER_TRIGGER` event.

(9) Ship generates the `MISSILE_FIRE(x, y)` event to the Missile object. The parameters of this event are the current (*x*, *y*) coordinates of the Ship, which are the starting point for the Missile.

(10) Tunnel receives the published `PLAYER_TRIGGER` event as well because Tunnel occasionally needs to start the game or terminate the screen saver mode based on this stimulus.

(11) Missile reacts to the `MISSILE_FIRE(x, y)` event by starting to fly, whereas it sets its initial position from the (*x*, *y*) event parameters delivered from the Ship.

www.newnespress.com

(12) This time around, the `TIME_TICK` event arrives while Missile is in flight. Missile posts the `MISSILE_IMG(x, y, bmp)` event to the Table.

(13) Table renders the Missile bitmap in the current frame buffer and dispatches the `MISSILE_IMG(x, y, bmp)` event to all the Mines to let the Mines test for the collision with the Missile. This determination depends on the type of the Mine. In this scenario a particular Mine[n] object detects a hit and posts the `HIT_MINE (score)` event to the Missile. The Mine provides the score earned for destroying this particular mine as the parameter of this event.

(14) Missile handles the `HIT_MINE(score)` event by becoming immediately ready to launch again and lets the Mine do the exploding. Because I decided to make the Ship responsible for the scorekeeping, the Missile also generates the `DESTROYED_MINE (score)` event to the Ship, to report the score for destroying the Mine.

(15) Upon reception of the `DESTROYED_MINE(score)` event, the Ship increments the score by the value received from the Missile.

(16) The Ship object handles the `PLAYER_SHIP_MOVE(x, y)` event by updating its position from the event parameters.

(17) When the Tunnel object handles the `SHIP_IMG(x, y, bmp_id)` event next time around, it detects a collision between the Ship and the tunnel wall. In that case it posts the event `HIT_WALL` to the Ship.

(18) The Ship responds to the `HIT_WALL` event by transitioning to the "exploding" state.

Even though the sequence diagram in Figure 1.4 shows merely some selected scenarios of the "Fly 'n' Shoot" game, I hope that the explanations give you a big picture of how the application works. More important, you should start getting the general idea about the thinking process that goes into designing an event-driven system with active objects and events.

1.5 Active Objects in the "Fly 'n' Shoot" Game

I hope that the analysis of the sequence diagram in Figure 1.4 makes it clear that actions performed by an active object depend as much on the events it receives as on the internal mode of the object. For example, the Missile active object handles the `TIME_TICK` event very differently when the Missile is in flight (Figure 1.4(12)) compared to the time when it is not (Figure 1.4(3)).

www.pbookshop.com

The best-known mechanism for handling such modal behavior is through state machines because a state machine makes the behavior explicitly dependent on both the event and the state of an object. Chapter 2 introduces UML state machine concepts more thoroughly. In this section, I give a cursory explanation of the state machines associated with each object in the "Fly 'n' Shoot" game.

1.5.1 The Missile Active Object

I start with the Missile state machine shown in Figure 1.5 because it turns out to be the simplest one. The explanation section immediately following the diagram illuminates the interesting points.

NOTE

A UML state diagram like Figure 1.5 preserves the general form of the traditional state transition diagrams, where states are represented as nodes and transitions as arcs connecting the nodes. In the UML notation the state nodes are represented as rectangles with rounded corners. The name of the state appears in bold type in the name compartment at the top of the state. Optionally, right below the name, a state can have an internal transition compartment separated from the name by a horizontal line. The internal transition compartment can contain entry actions (actions following the reserved symbol "entry"), exit actions (actions following the reserved symbol "exit"), and other internal transitions (e.g., those triggered by `TIME_TICK` in Figure 1.5(3)). State transitions are represented as arrows originating at the boundary of the source state and pointing to the boundary of the target state. At a minimum, a transition must be labeled with the triggering event. Optionally, the trigger can be followed by event parameters, a guard, and a list of actions.

(1) The state transition originating at the black ball is called the *initial transition*. Such transition designates the first active state after the state machine object is created. An initial transition can have associated actions, which in the UML notation are enlisted after the forward slash (/). In this particular case, the Missile state machine starts in the "armed" state and the actions executed upon the initialization consist of subscribing to the event `TIME_TICK`. Subscribing to an event means that the framework will deliver the specified event to the Missile active object every time the event is published to the framework. Chapter 7 describes the implementation of the publish-subscribe event delivery in QF.

www.[illegible]

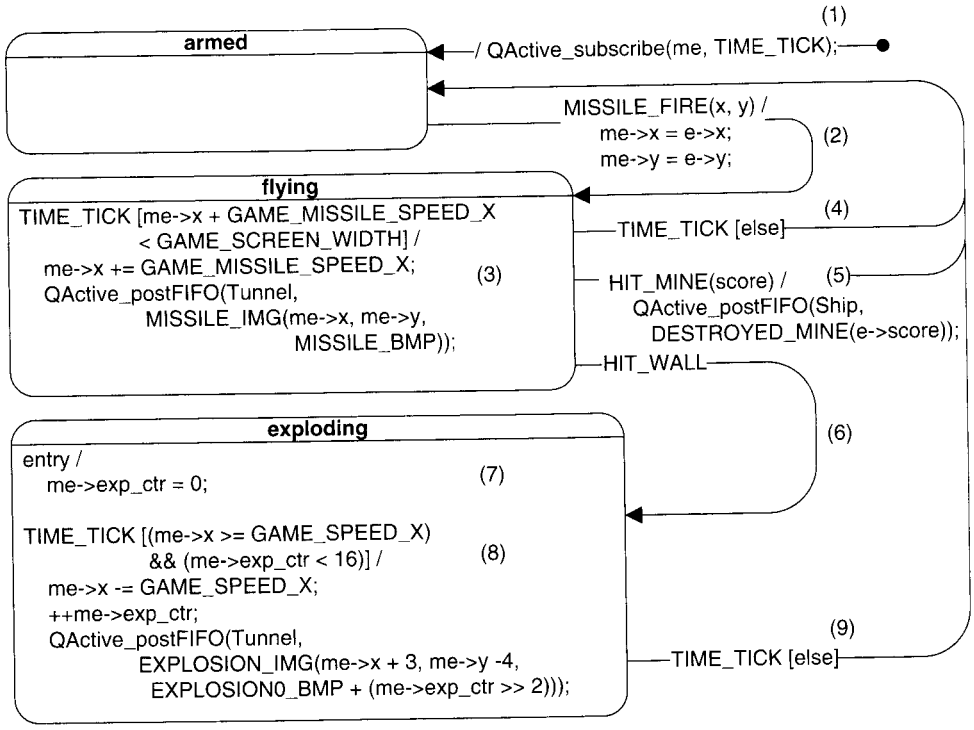

Figure 1.5: Missile state machine diagram.

(2) The arrow labeled with the `MISSILE_FIRE(x, y)` event denotes a state transition, that is, a change of state from "armed" to "flying." The `MISSILE_FIRE(x, y)` event is generated by the Ship object when the Player triggers the Missile (see the sequence diagram in Figure 1.4). In the `MISSILE_FIRE` event, Ship provides Missile with the initial coordinates in the event parameters (x, y).

NOTE

The UML intentionally does not specify the notation for actions. In practice, the actions are often written in the programming language used for coding the particular state machine. In all state diagrams in this book, I assume the C programming language. Furthermore, in the C expressions I refer to the data members associated with the state machine object through the "`me->`" prefix and to the event parameters through the "`e->`" prefix. For example, the action "`me->x = e->x;`" means that the internal data member x of the Missile active object is assigned the value of the event parameter x.

www.newness

(3) The event name `TIME_TICK` enlisted in the compartment below the state name denotes an *internal transition*. Internal transitions are simple reactions to events performed without a change of state. An internal transition, as well as a regular transition, can have a guard condition, enclosed in square brackets. Guard condition is a Boolean expression evaluated at runtime. If the guard evaluates to TRUE, the transition is taken. Otherwise, the transition is not taken and no actions enlisted after the forward slash (/) are executed. In this particular case, the guard condition checks whether the *x*-coordinate propagated by the Missile speed is still visible on the screen. If so, the actions are executed. These actions include propagation of the Missile position by one step and posting the `MISSILE_IMG` event with the current Missile position and the `MISSILE_BMP` bitmap number to the Tunnel active object. Direct event posting to an active object is accomplished by the QF function `QActive_postFIFO()`, which I discuss in Chapter 7.

(4) The same event `TIME_TICK` with the `[else]` guard denotes a regular state transition with the guard condition complementary to the other occurrence of the `TIME_TICK` event in the same state. In this case, the `TIME_TICK` transition to "armed" is taken if the Missile object flies out of the screen.

(5) The event `HIT_MINE(score)` triggers another transition to the "armed" state. The action associated with this transition posts the `DESTROYED_MINE` event with the parameter `e->score` to the Ship object, to report destroying the mine.

(6) The event `HIT_WALL` triggers a transition to the "exploding" state, with the purpose of animating the explosion bitmaps on the display.

(7) The label "entry" denotes the *entry action* to be executed unconditionally upon the entry to the "exploding" state. This action consists of clearing the explosion counter `(me->exp_ctr)` member of the Missile object.

(8) The `TIME_TICK` internal transition is guarded by the condition that the explosion does not scroll off the screen and that the explosion counter is lower than 16. The actions executed include propagation of the explosion position and posting the `EXPLOSION_IMG` event to the Tunnel active object. Please note that the bitmap of the explosion changes as the explosion counter gets bigger.

(9) The `TIME_TICK` regular transition with the complementary guard changes the state back to the "armed" state. This transition is taken after the animation of the explosion completes.

1.5.2 The Ship Active Object

The state machine of the Ship active object is shown in Figure 1.6. This state machine introduces the profound concept of *hierarchical state nesting*. The power of state nesting derives from the fact that it is designed to eliminate repetitions that otherwise would have to occur.

One of the main responsibilities of the Ship active object is to maintain the current position of the Ship. On the original EV-LM3S811 board, this position is determined by the potentiometer wheel (see Figure 1.2). The `PLAYER_SHIP_MOVE(x, y)` event is generated whenever the wheel position changes, as shown in the sequence diagram (Figure 1.4). The Ship object must always keep track of the wheel position, which means that all states of the Ship state machine must handle the `PLAYER_SHIP_MOVE(x, y)` event.

In the traditional finite state machine (FSM) formalism, you would need to repeat the Ship position update from the `PLAYER_SHIP_MOVE(x, y)` event in every state. But such repetitions would bloat the state machine and, more important, would represent multiple points of maintenance both in the diagram and the code. Such repetitions go against the DRY (Don't Repeat Yourself) principle, which is vital for flexible and maintainable code [Hunt+ 00].

Hierarchical state nesting remedies the problem. Consider the state "active" that surrounds all other states in Figure 1.6. The high-level "active" state is called the *superstate* and is abstract in that the state machine cannot be in this state directly but only in one of the states nested within, which are called the *substates* of "active." The UML semantics associated with state nesting prescribe that any event is first handled in the context of the currently active substate. If the substate cannot handle the event, the state machine attempts to handle the event in the context of the next-level superstate. Of course, state nesting in UML is not limited to just one level and the simple rule of processing events applies recursively to any level of nesting.

Specifically to the Ship state machine diagram shown in Figure 1.6, suppose that the event `PLAYER_SHIP_MOVE(x, y)` arrives when the state machine is in the "parked" state. The "parked" state does not handle the `PLAYER_SHIP_MOVE(x, y)` event. In the traditional finite state machine this would be the end of the story—the `PLAYER_SHIP_MOVE(x, y)` event would be silently discarded. However, the state machine in Figure 1.6 has another layer of the "active" superstate. Per the semantics of state nesting, this higher-level superstate handles the `PLAYER_SHIP_MOVE(x, y)` event, which is exactly what's needed. The same exact argumentation applies for any other substate of the "active" superstate, such as "flying"

www.Bookshop.com

or "exploding," because none of these substates handle the `PLAYER_SHIP_MOVE(x, y)` event. Instead, the "active" superstate handles the event in one single place, without repetitions.

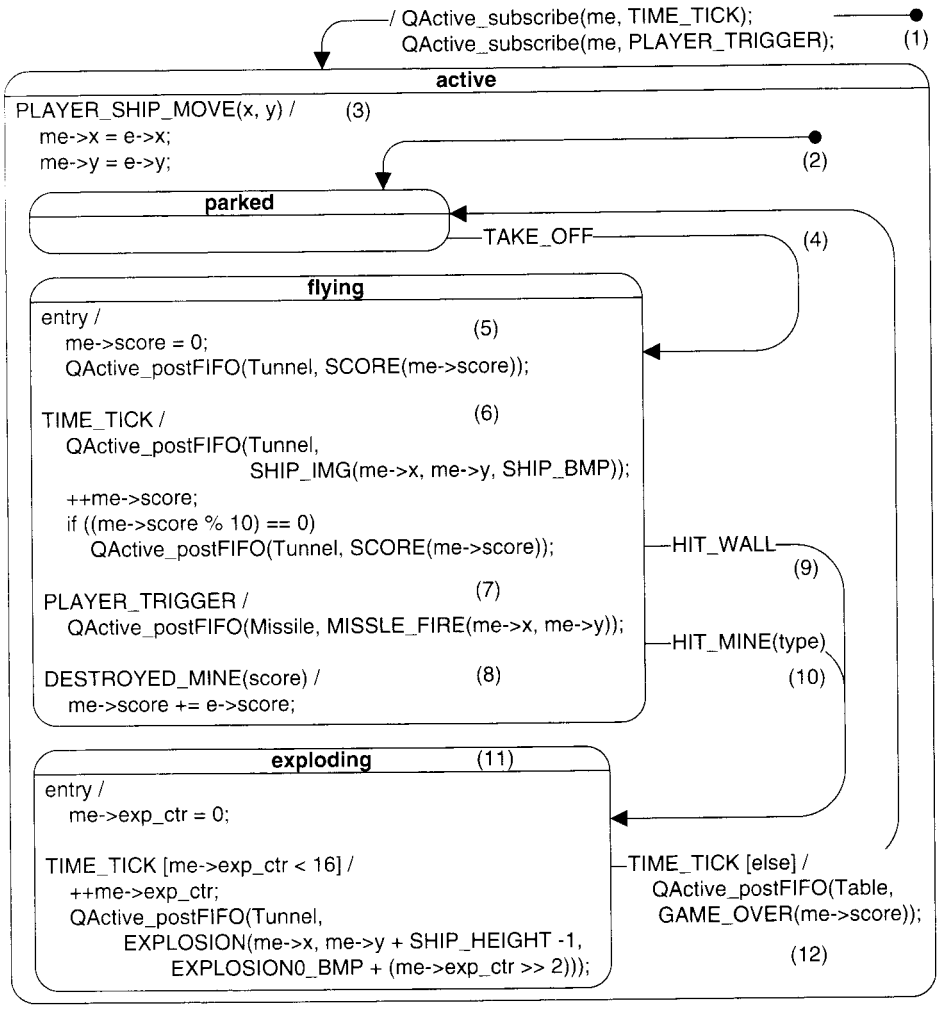

Figure 1.6: Ship state machine diagram.

(1) Upon the initial transition, the Ship state machine enters the "active" superstate and subscribes to events `TIME_TICK` and `PLAYER_TRIGGER`.

(2) At each level of nesting, a superstate can have a private initial transition that designates the active substate after the superstate is entered directly. Here the

initial transition of state "active" designates the substate "parked" as the initial active substate.

(3) The "active" superstate handles the `PLAYER_SHIP_MOVE(x, y)` event as an internal transition in which it updates the internal data members `me->x` and `me->y` from the event parameters `e->x` and `e->y`, respectively.

(4) The `TAKE_OFF` event triggers transition to "flying." This event is generated by the Tunnel object when the Player starts the game (see the description of the game in Section 1.2).

(5) The entry actions to "flying" include clearing the `me->score` data member and posting the event `SCORE` with the event parameter `me->score` to the Tunnel active object.

(6) The `TIME_TICK` internal transition causes posting the event `SHIP_IMG` with current Ship position and the `SHIP_BMP` bitmap number to the Tunnel active object. Additionally, the score is incremented for surviving another time tick. Finally, when the score is "round" (divisible by 10) it is also posted to the Tunnel active object. This decimation of the `SCORE` event is performed just to reduce the bandwidth of the communication, because the Tunnel active object only needs to give an approximation of the running score tally to the user.

(7) The `PLAYER_TRIIGGER` internal transition causes posting the event `MISSILE_FIRE` with current Ship position to the Missile active object. The parameters (`me->x, me->y`) provide the Missile with the initial position from the Ship.

(8) The `DESTROYED_MINE(score)` internal transition causes update of the score kept by the Ship. The score is not posted to the Table at this point, because the next `TIME_TICK` will send the "rounded" score, which is good enough for giving the Player the score approximation.

(9) The `HIT_WALL` event triggers transition to "exploding."

(10) The `HIT_MINE(type)` event also triggers transition to "exploding."

(11) The "exploding" state of the Ship state machine is very similar to the "exploding" state of Missile (see Figure 1.5(7-9)).

(12) The `TIME_TICK[else]` transition is taken when the Ship finishes exploding. Upon this transition, the Ship object posts the event `GAME_OVER(me->score)` to the Tunnel active object to terminate the game and display the final score to the Player.

www.newnespress.com

1.5.3 The Tunnel Active Object

The Tunnel active object has the most complex state machine, which is shown in Figure 1.7. Unlike the previous state diagrams, the diagram in Figure 1.7 shows only the high level of abstraction and omits a lot of details such as most entry/exit actions, internal transitions, guard conditions, or actions on transitions. Such a "zoomed out" view is always legal in the UML because UML allows you to choose the level of detail that you want to include in your diagram.

The Tunnel state machine uses state hierarchy more extensively than the Ship state machine in Figure 1.6. The explanation section immediately following Figure 1.7 illuminates the new uses of state nesting as well as the new elements not explained yet in the other state diagrams.

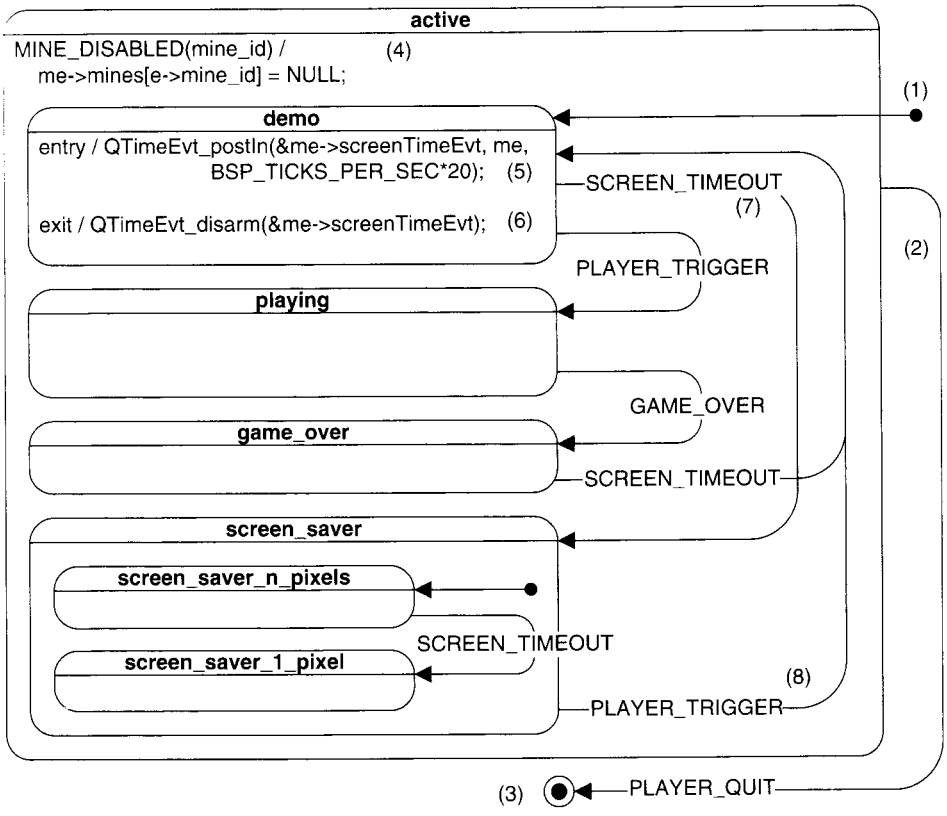

Figure 1.7: Tunnel state machine diagram.

www.[illegible].com

(1) An initial transition can target a substate at any level of state hierarchy, not necessarily just the next-lower level. Here the topmost initial transition goes down two levels to the substate "demo."

(2) The superstate "active" handles the `PLAYER_QUIT` event as a transition to the final state (see explanation of element (3)). Please note that the `PLAYER_QUIT` transition applies to all substates directly or transitively nested in the "active" superstate. Because a state transition always involves execution of all exit actions from the states, the high-level `PLAYER_QUIT` transition guarantees the proper cleanup that is specific to the current state context, whichever substate happens to be active at the time when the `PLAYER_QUIT` event arrives.

(3) The final state is indicated in the UML notation as the bull's-eye symbol and typically indicates destruction of the state machine object. In this case, the `PLAYER_QUIT` event indicates termination of the game.

(4) The `MINE_DISABLED(mine_id)` event is handled at the high level of the "active" state, which means that this internal transition applies to the whole sub-machine nested inside the "active" superstate. (See also the discussion of the Mine object in the next section.)

(5) The entry action to the "demo" state starts the screen *time event* (timer) `me->screenTimeEvt` to expire in 20 seconds. Time events are allocated by the application, but they are managed by the QF framework. QF provides functions to arm a time event, such as `QTimeEvt_postIn()` for one-shot timeout, and `QTimeEvt_postEvery()` for periodic time events. Arming a time event is in effect telling the QF framework, for instance, "Give me a nudge in 20 seconds." QF then posts the time event (the event `me->screenTimeEvt` in this case) to the active object after the requested number of clock ticks. Chapters 6 and 7 talk about time events in detail.

(6) The exit action from the "demo" state disarms the `me->screenTimeEvt` time event. This cleanup is necessary when the state can be exited by a different event than the time event, such as the `PLAYER_TRIGGER` transition.

(7) The `SCREEN_TIMEOUT` transition to "screen_saver" is triggered by the expiration of the `me->screenTimeEvt` time event. The signal `SCREEN_TIMEOUT` is assigned to this time event upon initialization and cannot be changed later.

(8) The transition triggered by `PLAYER_TRIGGER` applies equally to the two substates of the "screen_saver" superstate.

www.newm

1.5.4 The Mine Components

Mines are also modeled as hierarchical state machines, but are not active objects. Instead, Mines are components of the Tunnel active object and share its event queue and priority level. The Tunnel active object communicates with the Mine components *synchronously* by directly dispatching events to them via the function `QHsm_dispatch()`. Mines communicate with Tunnel and all other active objects *asynchronously* by posting events to their event queues via the function `QActive_postFIFO()`.

NOTE

Active objects exchange events asynchronously, meaning that the sender of the event merely posts the event to the event queue of the recipient active object without waiting for the completion of the event processing. In contrast, synchronous event processing corresponds to a function call (e.g., `QHsm_dispatch()`), which processes the event in the caller's thread of execution.

As shown in Figure 1.8, Tunnel maintains the data member `mines[]`, which is an array of pointers to hierarchical state machines (`QHsm *`). Each of these pointers can point either to a Mine1 object, a Mine2 object, or `NULL`, if the entry is unused. Note that Tunnel "knows" the Mines only as generic state machines (pointers to the `QHsm` structure defined in QP). Tunnel dispatches events to Mines uniformly, without differentiating between different types of Mines. Still, each Mine state machine handles the events in its specific way. For example, Mine type 2 checks for collision with the Missile differently than with the Ship, whereas Mine type 1 handles both identically.

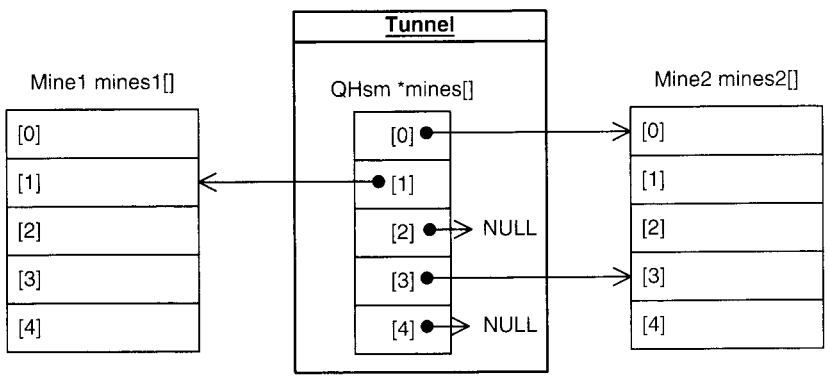

Figure 1.8: The Table active object manages two types of Mines.

NOTE

The last point is actually very interesting. Dispatching the same event to different Mine objects results in different behavior, specific to the type of the Mine, which in OOP is known as *polymorphism*. I'll have more to say about this in Chapter 3.

Each Mine object is fairly autonomous. The Mine maintains its own position and is responsible for informing the Tunnel object whenever the Mine gets destroyed or scrolls out of the display. This information is vital for the Tunnel object so that it can keep track of the unused Mines.

Figure 1.9 shows a hierarchical state machine of Mine2 state machine. Mine1 is very similar, except that it uses the same bitmap for testing collisions with the Missile and the Ship.

(1) The Mine starts in the "unused" state.

(2) The Tunnel object plants a Mine by dispatching the `MINE_PLANT(x, y)` event to the Mine. The Tunnel provides the (x, y) coordinates as the original position of the Mine.

(3) When the Mine scrolls off the display, the state machine transitions to "unused."

(4) When the Mine hits the Ship, the state machine transitions to "unused."

(5) When the Mine finishes exploding, the state machine transitions to "unused."

(6) When the Mine is recycled by the Tunnel object, the state machine transitions to "unused."

(7) The exit action in the "used" state posts the `MINE_DISABLDED(mine_id)` event to the Tunnel active object. Through this event, the Mine informs the Tunnel that it's becoming disabled, so that Tunnel can update its `mines[]` array (see also Figure 1.9(4)). The `mine_id` parameter of the event becomes the index into the `mines[]` array. Note that generating the `MINE_DISABLDED(mine_id)` event in the exit action from "used" is much safer and more maintainable than repeating this action in each individual transition (3), (4), (5), and (6).

www.nbw.nl

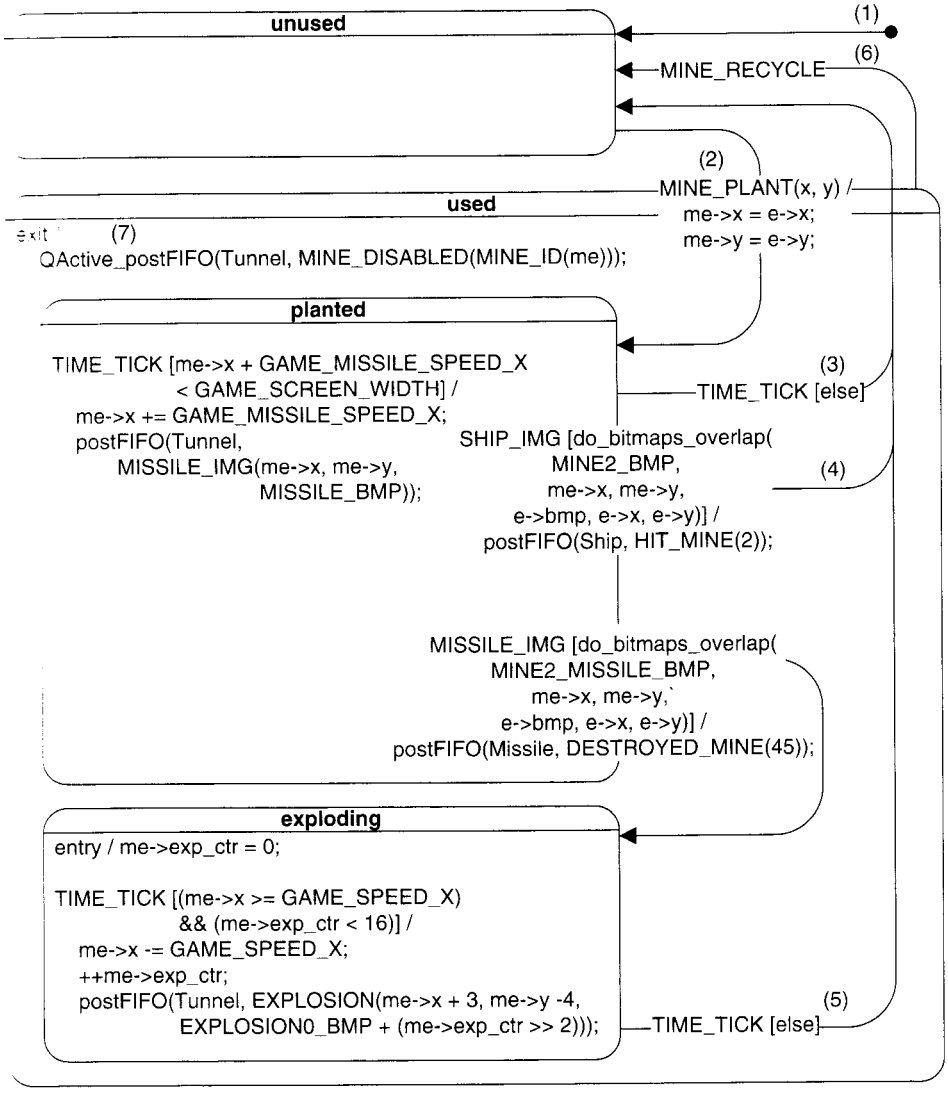

Figure 1.9: Mine2 state machine diagram.

1.6 Events in the "Fly 'n' Shoot" Game

The key events in the "Fly 'n' Shoot" game have been identified in the sequence diagram in Figure 1.4. Other events have been invented during the state machine design stage. In any case, you must have noticed that events consist really of two parts. The part of the event called the *signal* conveys the type of the occurrence (what happened). For example, the `TIME_TICK` signal conveys the arrival of a time tick, whereas the `PLAYER_SHIP_MOVE` signal conveys that the player wants to move the Ship. An event can also contain additional quantitative information about the occurrence in form of *event parameters*. For example, the `PLAYER_SHIP_MOVE` signal is accompanied by the parameters (x, y) that contain the quantitative information as to where exactly to move the Ship.

In QP, events are represented as instances of the `QEvent` structure provided by the framework. Specifically, the `QEvent` structure contains the member `sig`, to represent the signal of that event. Event parameters are added in the process of inheritance, as described in the sidebar "Single Inheritance in C."

SINGLE INHERITANCE IN C

Inheritance is the ability to derive new structures based on existing structures in order to reuse and organize code. You can implement single inheritance in C very simply by literally embedding the base structure as the first member of the derived structure. For example, Figure 1.10(A) shows the structure `ScoreEvt` derived from the base structure `QEvent` by embedding the `QEvent` instance as the first member of `ScoreEvt`. To make this idiom better stand out, I always name the base structure member `super`.

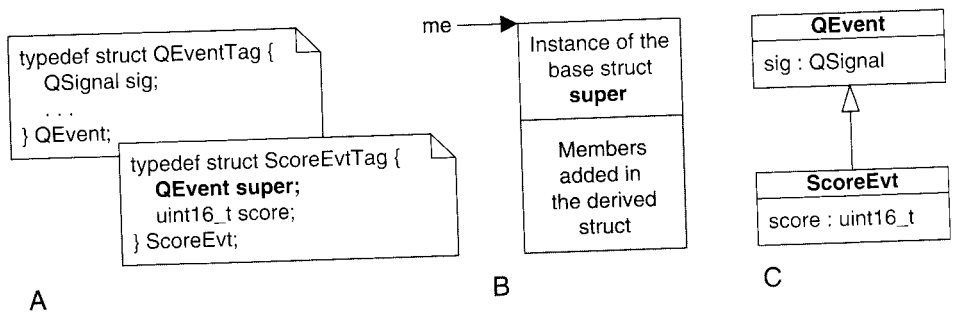

Figure 1.10: (A) Derivation of structures in C, (B) memory alignment, and (C) the UML class diagram.

www.newnespress.com

As shown in Figure 1.10(B), such nesting of structures always aligns the data member `super` at the beginning of every instance of the derived structure, which is actually guaranteed by the C standard. Specifically, WG14/N1124 Section 6.7.2.1.13 says: "... A pointer to a structure object, suitably converted, points to its initial member. There may be unnamed padding within a structure object, but not at its beginning" [ISO/IEC 9899:TC2]. The alignment lets you treat a pointer to the derived `ScoreEvt` structure as a pointer to the `QEvent` base structure. All this is legal, portable, and guaranteed by the C standard. Consequently, you can always safely pass a pointer to `ScoreEvt` to any C function that expects a pointer to `QEvent`. (To be strictly correct in C, you should explicitly cast this pointer. In OOP such casting is called *upcasting* and is always safe.) Therefore, all functions designed for the `QEvent` structure are automatically available to the `ScoreEvt` structure as well as other structures derived from `QEvent`. Figure 1.10(C) shows the UML class diagram depicting the inheritance relationship between `ScoreEvt` and `QEvent` structures.

QP uses single inheritance quite extensively not just for derivation of events with parameters, but also for derivation of state machines and active objects. Of course, the C++ version of QP uses the native C++ support for class inheritance rather than "derivation of structures." You'll see more examples of inheritance later in this chapter and throughout the book.

Because events are explicitly shared among most of the application components, it is convenient to declare them in the separate header file `game.h` shown in Listing 1.2. The explanation section immediately following the listing illuminates the interesting points.

Listing 1.2 Signals, event structures, and active object interfaces defined in file `game.h`

```
enum GameSignals {                                  /* signals used in the game */
    TIME_TICK_SIG = Q_USER_SIG,                      /* published from tick ISR */
    PLAYER_TRIGGER_SIG, /* published by Player (ISR) to trigger the Missile */
    PLAYER_QUIT_SIG,          /* published by Player (ISR) to quit the game */
    GAME_OVER_SIG,          /* published by Ship when it finishes exploding */
    /* insert other published signals here ... */
    MAX_PUB_SIG,                                   /* the last published signal */

    PLAYER_SHIP_MOVE_SIG,  /* posted by Player (ISR) to the Ship to move it */
    BLINK_TIMEOUT_SIG,          /* signal for Tunnel's blink timeout event */
    SCREEN_TIMEOUT_SIG,        /* signal for Tunnel's screen timeout event */
    TAKE_OFF_SIG,     /* from Tunnel to Ship to grant permission to take off */
    HIT_WALL_SIG,             /* from Tunnel to Ship when Ship hits the wall */
    HIT_MINE_SIG,      /* from Mine to Ship or Missile when it hits the mine */
    SHIP_IMG_SIG,      /* from Ship to the Tunnel to draw and check for hits */
    MISSILE_IMG_SIG,  /* from Missile the Tunnel to draw and check for hits */
    MINE_IMG_SIG,             /* sent by Mine to the Tunnel to draw the mine */
```

next page

```
        MISSILE_FIRE_SIG,                /* sent by Ship to the Missile to fire */
        DESTROYED_MINE_SIG,  /* from Missile to Ship when Missile destroyed Mine */
        EXPLOSION_SIG,     /* from any exploding object to render the explosion */
        MINE_PLANT_SIG,                  /* from Tunnel to the Mine to plant it */
        MINE_DISABLED_SIG,      /* from Mine to Tunnel when it becomes disabled */
        MINE_RECYCLE_SIG,          /* sent by Tunnel to Mine to recycle the mine */
        SCORE_SIG,    /* from Ship to Tunnel to adjust game level based on score */
         /* insert other signals here ... */
(4)     MAX_SIG                          /* the last signal (keep always last) */
    };

(5) typedef struct ObjectPosEvtTag {
(6)     QEvent super;                                /* extend the QEvent class */
(7)     uint8_t x;                              /* the x-position of the object */
(8)     uint8_t y;                              /* new y-position of the object */
    } ObjectPosEvt;

    typedef struct ObjectImageEvtTag {
        QEvent super;                                /* extend the QEvent class */
        uint8_t x;                              /* the x-position of the object */
        int8_t  y;                              /* the y-position of the object */
        uint8_t bmp;                   /* the bitmap ID representing the object */
    } ObjectImageEvt;

    typedef struct MineEvtTag {
        QEvent super;                                /* extend the QEvent class */
        uint8_t id;                                       /* the ID of the Mine */
    } MineEvt;

    typedef struct ScoreEvtTag {
        QEvent super;                                /* extend the QEvent class */
        uint16_t score;                                   /* the current score */
    } ScoreEvt;

    /* opaque pointers to active objects in the application */
(9) extern QActive * const AO_Tunnel;
(10) extern QActive * const AO_Ship;
(11) extern QActive * const AO_Missile;

    /* active objects' "constructors" */
(12) void Tunnel_ctor(void);
(13) void Ship_ctor(void);
(14) void Missile_ctor(void);
```

(1) In QP, signals of events are simply enumerated constants. Placing all signals in a single enumeration is particularly convenient to avoid inadvertent overlap in the numerical values of different signals.

www.newnespress

(2) The application-level signals do not start from zero but rather are offset by the constant `Q_USER_SIG`. This is because QP reserves the lowest few signals for the internal use and provides the constant `Q_USER_SIG` as an offset from which user-level signals can start. Also note that by convention, I attach the suffix `_SIG` to all signals so that I can easily distinguish signals from other constants. I drop the suffix `_SIG` in the state diagrams to reduce the clutter.

(3) The constant `MAX_PUB_SIG` delimits the published signals from the rest. The publish-subscribe event delivery mechanism consumes some RAM, which is proportional to the number of published signals. I save some RAM by providing the lower limit of published signals to `QP (MAX_PUB_SIG)` rather than the maximum of all signals used in the application. (See also Listing 1.1(9)).

(4) The last enumeration `MAX_SIG` indicates the maximum of all signals used in the application.

(5) The event structure `ObjectPosEvt` defines a "class" of events that convey the object's position on the display in the event parameters.

(6) The structure `ObjectPosEvt` derives from the base structure `QEvent`, as explained in the sidebar "Single Inheritance in C."

(7,8) The structure `ObjectPosEvt` adds parameters *x* and *y*, which are coordinates of the object on the display.

NOTE

Throughout this book I use the following standard exact-width integer types (WG14/N843 C99 Standard, Section 7.18.1.1) [ISO/IEC 9899:TC2]:

Exact Size	Unsigned	Signed
8-bits	uint8_t	int8_t
16-bits	uint16_t	int16_t
32-bits	uint32_t	int32_t

If your (pre-standard) compiler does not provide the `<stdint.h>` header file, you can always `typedef` the exact-width integer types using the standard C data types such as `signed/unsigned char`, `short`, `int`, and `long`.

(9-11) These global pointers represent active objects in the application and are used for posting events directly to active objects. Because the pointers can be initialized at compile time, I like to declare them `const`, so that they can be placed in ROM. The active object pointers are "opaque" because they cannot access the whole active object, only the part inherited from the `QActive` structure. I'll have more to say about this in the next section.

(12-14) These functions perform an early initialization of the active objects in the system. They play the role of static "constructors," which in C you need to call explicitly, typically at the beginning of `main()`. (See also Listing 1.1 (10-12).)

1.6.1 Generating, Posting, and Publishing Events

The QF framework supports two types of asynchronous event exchange:

1. The simple mechanism of direct event posting supported through the functions `QActive_postFIFO()` and `QActive_postLIFO()`, where the producer of an event directly posts the event to the event queue of the consumer active object.
2. A more sophisticated publish-subscribe event delivery mechanism supported through the functions `QF_publish()` and `QActive_subscribe()`, where the producers of the events "publish" them to the framework, and the framework then delivers the events to all active objects that had "subscribed" to these events.

In QF, any part of the system, not necessarily only the active objects, can produce events. For example, interrupt service routines (ISRs) or device drivers can also produce events. On the other hand, only active objects can consume events, because only active objects have event queues.

NOTE

QF also provides "raw" thread-safe event queues (`struct QEQueue`), which can consume events as well. These "raw" thread-safe queues cannot block and are intended to deliver events to ISRs or device drivers. Refer to Chapter 7 for more details.

The most important characteristic of event management in QF is that the framework passes around only pointers to events, not the events themselves. QF never copies the

www.newnespress.com

events by value ("zero-copy" policy); even in case of publishing events that often involves multicasting the same event to multiple subscribers. The actual event instances are either constant events statically allocated at compile time or dynamic events allocated at runtime from one of the event pools that the framework manages. Listing 1.3 provides examples of publishing static events and posting dynamic events from the ISRs of the "Fly 'n' Shoot" version for the Stellaris board (file `<qp>\qpc\examples\cortex-m3\vanilla\iar\game-ev-lm3s811\bsp.c`). In Section 1.7.3 you will see other examples of event posting from active objects in the state machine code.

Listing 1.3 Generating, posting, and publishing events from the ISRs in `bsp.c` for the Stellaris board

```
void ISR_SysTick(void) {
    static QEvent const tickEvt = { TIME_TICK_SIG, 0 };
    QF_publish(&tickEvt);     /* publish the tick event to all subscribers */
    QF_tick();                              /* process all armed time events */
}
/*..........................................................................*/
void ISR_ADC(void) {
    static uint32_t adcLPS = 0;            /* Low-Pass-Filtered ADC reading */
    static uint32_t wheel = 0;                     /* the last wheel position */
    unsigned long tmp;

    ADCIntClear(ADC_BASE, 3);                      /* clear the ADC interrupt */
    ADCSequenceDataGet(ADC_BASE, 3, &tmp);   /* read the data from the ADC */

    /* 1st order low-pass filter: time constant ~= 2^n samples
     * TF = (1/2^n)/(z-((2^n - 1)/2^n)),
     * e.g., n=3, y(k+1) = y(k) - y(k)/8 + x(k)/8 => y += (x - y)/8
     */
    adcLPS += (((int)tmp - (int)adcLPS + 4) >> 3);        /* Low-Pass-Filter */

    /* compute the next position of the wheel */
    tmp = (((1 << 10) - adcLPS)*(BSP_SCREEN_HEIGHT - 2)) >> 10;

    if (tmp != wheel) {                    /* did the wheel position change? */
        ObjectPosEvt *ope = Q_NEW(ObjectPosEvt, PLAYER_SHIP_MOVE_SIG);
        ope->x = (uint8_t)GAME_SHIP_X;                /* x-position is fixed */
        ope->y = (uint8_t)tmp;
        QActive_postFIFO(AO_ship, (QEvent *)ope);   /* post to the Ship AO */
        wheel = tmp;                        /* save the last position of the wheel */
    }
    . . .
}
```

(1) In the case of the Stellaris board, the function `ISR_SysTick()` services the system clock tick ISR generated by the Cortex-M3 system tick timer.

(2) The `TIME_TICK` event never changes, so it can be statically allocated just once. This event is declared as `const`, which means that it can be placed in ROM. The initializer list for this event consists of the signal `TIME_TICK_SIG` followed by zero. This zero informs the QF framework that this event is static and should never be recycled to an event pool.

(3) The ISR calls the framework function `QF_publish()`, which takes the pointer to the `tickEvt` event to deliver to all subscribers.

(4) The ISR calls the function `QF_tick()`, in which the framework manages the armed time events.

(5) The function `ISR_ADC()` services the ADC conversions, which ultimately deliver the position of the Ship.

(6) The ISR reads the data from the ADC.

(7,8) A low-pass filter is applied to the raw ADC reading and the potentiometer wheel position is computed.

(9) The QF macro `Q_NEW(ObjectPosEvt, PLAYER_SHIP_MOVE_SIG)` dynamically allocates an instance of the `ObjectPosEvt` event from an event pool managed by QF. The macro also performs the association between the signal `PLAYER_SHIP_MOVE_SIG` and the allocated event. The `Q_NEW()` macro returns the pointer to the allocated event.

NOTE

The `PLAYER_SHIP_MOVE(x, y)` event is an example of an event with changing parameters. In general, such an event cannot be allocated statically (like the `TIME_TICK` event at label (2)) because it can change asynchronously next time the ISR executes. Some active objects in the system might still be referring to the event via a pointer, so the event should not be changing. Dynamic event allocation of QF solves all such concurrency issues because every time a new event is allocated. QF then recycles the dynamic events after it determines that all active objects are done with accessing the events.

(10,11) The x and y parameters of the event are assigned.

(12) The dynamic event is posted directly to the Ship active object.

www.newnespress.com

1.7 Coding Hierarchical State Machines

Contrary to widespread misconceptions, you don't need big design automation tools to translate hierarchical state machines (UML statecharts) into efficient and highly maintainable C or C++. This section explains how to hand-code the Ship state machine from Figure 1.6 with the help of the QF real-time framework and the QEP hierarchical processor, which is also part of the QP event-driven platform. Once you know how to code this state machine, you know how to code them all.

The source code for the Ship state machine is found in the file `ship.c` located either in the DOS version or the Stellaris version of the "Fly 'n' Shoot" game. I break the explanation of this file into three steps.

1.7.1 Step 1: Defining the Ship Structure

In the first step you define the `Ship` data structure. Just as in the case of events, you use inheritance to derive the `Ship` structure from the framework structure `QActive` (see the sidebar "Single Inheritance in C"). Creating this inheritance relationship ties the `Ship` structure to the QF framework.

The main responsibility of the `QActive` base structure is to store the information about the current active state of the state machine as well as the event queue and priority level of the Ship active object. In fact, `QActive` itself derives from a simpler QEP structure `QHsm` that represents just the current active state of a hierarchical state machine. On top of that information, almost every state machine must also store other "extended-state" information. For example, the Ship object is responsible for maintaining the Ship position as well as the score accumulated in the game. You supply this additional information by means of data members enlisted after the base structure member `super`, as shown in Listing 1.4.

Listing 1.4 Deriving the Ship structure in file `ship.c`

```
(1)  #include "qp_port.h"                                        /* the QP port */
(2)  #include "bsp.h"                                     /* Board Support Package */
(3)  #include "game.h"                                        /* this application */
     /* local objects -------------------------------------------------------*/
(4)  typedef struct ShipTag {
(5)      QActive super;                          /* derive from the QActive struct */
(6)      uint8_t x;          /* x-coordinate of the Ship position on the display */
(7)      uint8_t y;          /* y-coordinate of the Ship position on the display */
(8)      uint8_t exp_ctr;      /* explosion counter, used to animate explosions */
```

Continued on next page

www.pbookshop.com

```
(9)      uint16_t score;                                  /* running score of the game */
(10)  } Ship;                                  /* the typedef-ed name for the Ship struct */

                                                          /* state handler functions... */
(11)  static QState Ship_active    (Ship *me, QEvent const *e);
(12)  static QState Ship_parked    (Ship *me, QEvent const *e);
(13)  static QState Ship_flying    (Ship *me, QEvent const *e);
(14)  static QState Ship_exploding(Ship *me, QEvent const *e);

(15)  static QState Ship_initial   (Ship *me, QEvent const *e);

(16)  static Ship l_ship;            /* the sole instance of the Ship active object */

       /* global objects -------------------------------------------------------*/
(17)  QActive * const AO_ship = (QActive *)&l_ship;   /* opaque pointer to Ship AO */
```

(1) Every application-level C file that uses the QP platform must include the `qp_port.h` header file.

(2) The `bsp.h` header file contains the interface to the Board Support Package.

(3) The `game.h` header file contains the declarations of events and other facilities shared among the components of the application (see Listing 1.2).

(4) This structure defines the Ship active object.

NOTE

I like to keep active objects, and indeed all state machine objects (such as Mines), strictly encapsulated. Therefore, I don't put the state machine structure definitions in header files; rather, I define them right in the implementation file, such as `ship.c`. That way I can be sure that the internal data members of the `Ship` structure are not known to any other parts of the application.

(5) The `Ship` active object structure derives from the framework structure `QActive`, as described in the sidebar "Single Inheritance in C."

(6,7) The `x` and `y` data members represent the position of the Ship on the display.

(8) The `exp_ctr` member is used for pacing the explosion animation (see also the "exploding" state in the Ship state diagram in Figure 1.6).

(9) The `score` member stores the accumulated score in the game.

www.newnespress.com

(10) I use the `typedef` to define the shorter name `Ship` equivalent to `struct ShipTag`.

(11-14) These four functions are called *state-handler functions* because they correspond one to one to the states of the Ship state machine shown in Figure 1.6. For example, the `Ship_active()` function represents the "active" state. The QEP event processor calls the state-handler functions to realize the UML semantics of state machine execution. All state-handler functions have the same signature. A state-handler function takes the state machine pointer and the event pointer as arguments and returns the status of the operation back to the event processor—for example whether the event was handled or not. The return type `QState` of state-handler functions is `typedef`-ed to `uint8_t` as `QState` in the header file `<qp>\qpc\include\qep.h`.

NOTE

I use a simple naming convention to strengthen the association between the structures and the functions designed to operate on these structures. First, I name the functions by combining the `typedef`'ed structure name with the name of the operation (e.g., `Ship_active`). Second, I always place the pointer to the structure as the first argument of the associated function, and I always name this argument "`me`" (e.g., `Ship_active(Ship *me, ...)`).

(15) In addition to state-handler functions, every state machine must declare the initial pseudostate, which QEP invokes to execute the topmost initial transition (see Figure 1.6(1)). The initial pseudostate handler has a signature identical to the regular state-handler function.

(16) In this line I statically allocate the storage for the `Ship` active object. Note that the object `l_ship` is defined as `static` so that it is accessible only locally at the file scope of the `ship.c` file.

(17) In this line I define and initialize the global pointer `AO_Ship` to the Ship active object (see also Listing 1.2(10)). This pointer is "opaque" because it treats the Ship object as the generic `QActive` base structure rather than the specific `Ship` structure. The power of an "opaque" pointer is that it allows me to completely hide the definition of the `Ship` structure and make it inaccessible to the rest of the application. Still, the other application components can access the Ship object to post events directly to it via the `QActive_postFIFO(QActive *me, QEvent const *e)` function.

1.7.2 Step 2: Initializing the State Machine

The state machine initialization is divided into the following two steps for increased flexibility and better control of the initialization timeline:

1. The state machine "constructor"; and
2. The top-most initial transition.

The state machine "constructor," such as `Ship_ctor()`, intentionally does not execute the topmost initial transition defined in the initial pseudostate because at that time some vital objects can be missing and critical hardware might not be properly initialized yet.[3] Instead, the state machine "constructor" merely puts the state machine in the initial pseudostate. Later, the user code must trigger the topmost initial transition explicitly, which happens actually inside the function `QActive_start()` (see Listing 1.1(18-20)). Listing 1.5 shows the instantiation (the "constructor" function) and initialization (the initial pseudostate) of the Ship active object.

Listing 1.5 Instantiation and initialization of the Ship active object in `ship.c`

```
(1)  void Ship_ctor(void) {                                  /* instantiation */
(2)      Ship *me = &l_ship;
(3)      QActive_ctor(&me->super, (QStateHandler)&Ship_initial);
(4)      me->x = GAME_SHIP_X;
(5)      me->y = GAME_SHIP_Y;
     }
     /*..........................................................................*/
(6)  QState Ship_initial(Ship *me, QEvent const *e) {          /* initialization */
(7)      QActive_subscribe((QActive *)me, TIME_TICK_SIG);
(8)      QActive_subscribe((QActive *)me, PLAYER_TRIGGER_SIG);

(9)      return Q_TRAN(&Ship_active);              /* top-most initial transition */
     }
```

(1) The global function `Ship_ctor()` is prototyped in `game.h` and called at the beginning of `main()`.

(2) The "`me`" pointer points to the statically allocated Ship object (see Listing 1.4(16)).

[3] In C++, the static constructors run even before `main()`.

www.newm

(3) Every derived structure is responsible for initializing the part inherited from the base structure. The "constructor" `QActive_ctor()` puts the state machine in the initial pseudostate `&Ship_initial` (see Listing 1.4(15)).

(4,5) The Ship position is initialized.

(6) The `Ship_initial()` function defines the topmost initial transition in the Ship state machine (see Figure 1.6(1)).

(7,8) The Ship active object subscribes to signals `TIME_TICK_SIG` and `PLAYER_TRIGGER_SIG`, as specified in the state diagram in Figure 1.6(1).

(9) The initial state "active" is specified by returning the QP macro `Q_TRAN()`.

NOTE

The macro `Q_TRAN()` must always follow the `return` statement.

1.7.3 Step 3: Defining State-Handler Functions

In the last step, you actually code the Ship state machine by implementing one state at a time as a state-handler function. To determine what elements belong to any given state-handler function, you follow around the state's boundary in the diagram (Figure 1.6). You need to implement all transitions originating at the boundary, any entry and exit actions defined in the state, and all internal transitions enlisted directly in the state. Additionally, if there is an initial transition embedded directly in the state, you need to implement it as well.

Take for example the state "flying" shown in Figure 1.6. This state has an entry action and two transitions originating at its boundary: `HIT_WALL` and `HIT_MINE(type)` as well as three internal transitions `TIME_TICK`, `PLAYER_TRIGGER`, and `DESTROYED_MINE(score)`. The "flying" state nests inside the "active" superstate.

Listing 1.6 shows two state-handler functions of the Ship state machine from Figure 1.6. The state-handler functions correspond to the states "active" and "flying," respectively. The explanation section immediately following the listing highlights the important implementation techniques.

newnespress.com

Listing 1.6 State-handler functions for states "active" and "flying" in `ship.c`

```
(1)  QState Ship_active(Ship *me, QEvent const *e) {
(2)      switch (e->sig) {
(3)          case Q_INIT_SIG: {                          /* nested initial transition */
(4)              /* any actions associated with the initial transition */
(5)              return Q_TRAN(&Ship_parked);
             }
(6)          case PLAYER_SHIP_MOVE_SIG: {
(7)              me->x = ((ObjectPosEvt const *)e)->x;
(8)              me->y = ((ObjectPosEvt const *)e)->y;
(9)              return Q_HANDLED();
             }
         }
(10)     return Q_SUPER(&QHsm_top);                      /* return the superstate */
     }
     /*.......................................................................*/
     QState Ship_flying(Ship *me, QEvent const *e) {
         switch (e->sig) {
(11)         case Q_ENTRY_SIG: {
(12)             ScoreEvt *sev;

                 me->score = 0;                                  /* reset the score */
(13)             sev = Q_NEW(ScoreEvt, SCORE_SIG);
(14)             sev->score = me->score;
(15)             QActive_postFIFO(AO_Tunnel, (QEvent *)sev);
(16)             return Q_HANDLED();
             }
             case TIME_TICK_SIG: {
                 /* tell the Tunnel to draw the Ship and test for hits */
                 ObjectImageEvt *oie = Q_NEW(ObjectImageEvt, SHIP_IMG_SIG);
                 oie->x   = me->x;
                 oie->y   = me->y;
                 oie->bmp = SHIP_BMP;
                 QActive_postFIFO(AO_Tunnel, (QEvent *)oie);

                 ++me->score;   /* increment the score for surviving another tick */

                 if ((me->score % 10) == 0) {            /* is the score "round"? */
                     ScoreEvt *sev = Q_NEW(ScoreEvt, SCORE_SIG);
                     sev->score = me->score;
                     QActive_postFIFO(AO_Tunnel, (QEvent *)sev);
                 }
                 return Q_HANDLED();
             }
             case PLAYER_TRIGGER_SIG: {                  /* trigger the Missile */
                 ObjectPosEvt *ope = Q_NEW(ObjectPosEvt, MISSILE_FIRE_SIG);
                 ope->x = me->x;
                 ope->y = me->y + SHIP_HEIGHT - 1;
```

www.newnes.com

```
                QActive_postFIFO(AO_Missile, (QEvent *)ope);
                return Q_HANDLED();
            }
            case DESTROYED_MINE_SIG: {
                me->score += ((ScoreEvt const *)e)->score;
                /* the score will be sent to the Tunnel by the next TIME_TICK */
                return Q_HANDLED();
            }
17)         case HIT_WALL_SIG:
18)         case HIT_MINE_SIG: {
19)             /* any actions associated with the transition */
20)             return Q_TRAN(&Ship_exploding);
            }
        }
21)     return Q_SUPER(&Ship_active);                /* return the superstate */
    }
```

1) Each state handler must have the same signature, that is, it must take two parameters: the state machine pointer "me" and the pointer to `QEvent`. The keyword `const` before the `*` in the event pointer declaration means that the event pointed to by that pointer cannot be changed inside the state-handler function (i.e., the event is read-only). A state-handler function must return `QState`, which conveys the status of the event handling to the QEP event processor.

2) Typically, every state handler is structured as a `switch` statement that discriminates based on the signal of the event `e->sig`.

3) This line of code pertains to the nested *initial transition* Figure 1.6(2). QEP provides a reserved signal `Q_INIT_SIG` that the framework passes to the state-handler function when it wants to execute the initial transition.

4) You can enlist any actions associated with this initial transition (none in this particular case).

5) You designate the target substate with the `Q_TRAN()` macro. This macro must always follow the `return` statement, through which the state-handler function informs the QEP event processor that the transition has been taken.

NOTE

The initial transition must necessarily target a direct or transitive substate of a given state. An initial transition cannot target a peer state or go up in state hierarchy to higher-level states, which in the UML would represent a "malformed" state machine.

(6) This line of code pertains to the internal transition `PLAYER_SHIP_MOVE_SIG(x, y)` in Figure 1.6(3).

(7,8) You access the data members of the Ship state machine via the "`me`" argument of the state-handler function. You access the event parameters via the "`e`" argument. You need to cast the event pointer from the generic `QEvent` base class to the specific event structure expected for the `PLAYER_SHIP_MOVE_SIG`, which is `ObjectPosEvt` in this case.

NOTE

The association between the event signal and event structure (event parameters) is established at the time the event is generated. All recipients of that event must know about this association to perform the cast to the correct event structure.

(9) You terminate the case statement with "`return QHandled()`", which informs the QEP processor that the event has been handled but no transition has been taken.

(10) The final `return` from a state-handler function designates the *superstate* of that state by means of the QEP macro `Q_SUPER()`. The final `return` statement from a state-handler function represents the single point of maintenance for changing the nesting level of a given state. The state "active" in Figure 1.6 has no explicit superstate, which means that it is implicitly nested in the "top" state. The "top" state is a UML concept that denotes the ultimate root of the state hierarchy in a hierarchical state machine. QEP provides the "top" state as a state-handler function `QHsm_top()`, and therefore the `Ship_active()` state handler uses the pointer `&QHsm_top` as the argument of the macro `Q_SUPER()`.

www.ne... .com

NOTE

In C and C++, a pointer-to-function `QHsm_top()` can be written either as `QHsm_top` or `&QHsm_top`. Even though the notation `QHsm_top` is more succinct, I prefer adding the ampersand explicitly, to leave absolutely no doubt that I mean a pointer-to-function `&QHsm_top`.

(11) This line of code pertains to the *entry action* into state "flying" (Figure 1.6(5)). QEP provides a reserved signal `Q_ENTRY_SIG` that the framework passes to the state-handler function when it wants to execute the entry actions.

(12) The entry action to "flying" posts the `SCORE` event to the Tunnel active object (Figure 1.6(5)). This line defines a temporary pointer to the event structure `ScoreEvt`.

(13) The QF macro `Q_NEW(ScoreEvt, SCORE_SIG)` dynamically allocates an instance of the `ScoreEvt` from an event pool managed by QF. The macro also performs the association between the signal `SCORE_SIG` and the allocated event. The `Q_NEW()` macro returns the pointer to the allocated event.

(14) The `score` parameter of the `ScoreEvt` is set from the state machine member `me->score`.

(15) The `sev` event is posted directly to the Tunnel active object by means of the QP function `QActive_postFIFO()`. The arguments of this function are the recipient active object (`AO_Tunnel` in this case) and the pointer to the event (the temporary pointer `sev` in this case).

(16) You terminate the case statement with `return Q_Handled()`, which informs QEP that the entry actions have been handled.

(17,18) These two lines of code pertain to the *state transitions* from "flying" to "exploding" (Figure 1.6(9, 10)).

(19) You can enlist any actions associated with the transition (none in this particular case).

(20) You designate the target of the transition with the `Q_TRAN()` macro.

www.ae

(21) The final return from a state-handler function designates the *superstate* of that state. The state "flying" in Figure 1.6 nests in the state "active," so the state handler `Ship_flying()` returns the pointer `&Ship_active`.

When implementing state-handler functions you need to keep in mind that the QEP event processor is in charge here rather than your code. QEP will invoke a state-handler function for various reasons: for hierarchical event processing, for execution of entry and exit actions, for triggering initial transitions, or even just to elicit the superstate of a given state handler. Therefore, you should not assume that a state handler would be invoked only for processing signals enlisted in the `case` statements. You should avoid any code outside the `switch` statement, especially code that would have side effects.

1.8 The Execution Model

As you saw in Listing 1.1(21), the `main()` function eventually gives control to the event-driven framework by calling `QF_run()` to execute the application. In this section, I briefly explain how QF allocates the CPU cycles to various tasks within the system and what options you have in choosing the execution model.

1.8.1 Simple Nonpreemptive "Vanilla" Scheduler

The "Fly 'n' Shoot" example uses the simplest QF configuration, in which QF runs on a bare-metal target processor without any underlying operating system or kernel.[4] I call such a QF configuration "plain vanilla" or just "vanilla."

QF includes a simple nonpreemptive "vanilla" kernel, which executes one active object at a time in the infinite loop (similar to the "superloop"). The "vanilla" kernel is engaged after each event is processed in the run-to-completion (RTC) fashion to choose the next highest-priority active object ready to process the next event. The "vanilla" scheduler is cooperative, which means that all active objects cooperate to share a single CPU and implicitly yield to each other after every RTC step. The kernel is nonpreemptive, meaning that every active object must completely process an event before any other active object can start processing another event.

[4] The 80×86 version of the "Fly 'n' Shoot" game runs on top of DOS, but DOS does not provide any multitasking support.

The ISRs can preempt the execution of active objects at any time, but due to the simplistic nature of the "vanilla" kernel, every ISR returns to exactly the preemption point. If the ISR posts or publishes an event to any active object, the processing of this event won't start until the current RTC step completes. The maximum time an event for the highest-priority active object can be delayed this way is called the *task-level response*. With the nonpreemptive "vanilla" kernel, the task-level response is equal to the longest RTC step of all active objects in the system. Note that the task-level response of the "vanilla" kernel is still a lot better than the traditional "superloop" (a.k.a. main+ISRs) architecture. I'll have more to say about this in the upcoming Section 1.9, where I compare the event-driven "Fly 'n' Shoot" example to the traditionally structured Quickstart application.

The task-level response of the simple "vanilla" kernel turns out to be adequate for surprisingly many applications because state machines by nature handle events quickly without a need to busy-wait for events. (A state machine simply runs to completion and becomes dormant until another event arrives.) Also note that often you can make the task-level response as fast as you need by breaking up longer RTC steps into shorter ones (e.g., by using the "Reminder" state pattern described in Chapter 5).

1.8.2 The QK Preemptive Kernel

In some cases, breaking up long RTC steps into short enough pieces might be very difficult, and consequently the task-level response of the nonpreemptive "vanilla" kernel might be too long. An example system could be a GPS receiver. Such a receiver performs a lot of floating-point number crunching on a fixed-point CPU to calculate the GPS position. At the same time, the GPS receiver must track the GPS satellite signals, which involves closing control loops in submillisecond intervals. It turns out that it's not easy to break up the position-fix computation into short enough RTC steps to allow reliable signal tracking.

But the RTC semantics of state machine execution do not mean that a state machine has to monopolize the CPU for the duration of the RTC step. A preemptive kernel can perform a context switch in the middle of the long RTC step to allow a higher-priority active object to run. As long as the active objects don't share resources, they can run concurrently and complete their RTC steps independently (see also Section 6.3.3 in Chapter 6).

The QP event-driven platform includes a tiny, fully **preemptive**, priority-based real-time kernel component called QK, which is specifically designed for processing

events in the RTC fashion. Configuring QP to use the preemptive QK kernel is very easy, but as with any fully preemptive kernel you must be very careful with any resources shared among active objects.[5] The "Fly 'n' Shoot" example has been purposely designed to avoid any resource sharing among active objects, so the application code does not need to change at all to run on top of the QK preemptive kernel, or any other preemptive kernel or RTOS for that matter. The accompanying code contains the "Fly 'n' Shoot" example with QK in the following directory: `<qp>\qpc\examples\80x86\qk\tcpp101\1\game\`. You can execute this example in a DOS-console on any standard Windows-based PC.

1.8.3 Traditional OS/RTOS

QP can also work with a traditional operating system (OS), such as Windows or Linux, or virtually any real-time operating system (RTOS) to take advantage of the existing device drivers, communication stacks, and other middleware.

QP contains a platform abstraction layer (PAL), which makes adapting QP to virtually any operating system easy. The carefully designed PAL allows tight integration with the underlying OS/RTOS by reusing any provided facilities for interrupt management, message queues, and memory partitions. I cover porting QP in Chapter 8.

1.9 Comparison to the Traditional Approach

The "Fly 'n' Shoot" game behaves intentionally almost identically to the Quickstart application provided in source code with the Luminary Micro Stellaris EV-LM3S811 evaluation kit [Luminary 06]. In this section I'd like to compare the traditional approach represented by the Quickstart application with the state machine-based solution exemplified in the "Fly 'n' Shoot" game.

Figure 1.11(A) shows schematically the flowchart of the Quickstart application; Figure 1.11(B) shows the flowchart of the "Fly 'n' Shoot" game running on top of the cooperative "vanilla" kernel. At the highest level, the flowcharts are similar in that they both consist of an endless loop surrounding the entire processing. But the internal structure of the main loop is very different in the two cases. As indicated by the heavy

[5] QK provides a mutex facility for enforcing a mutually exclusive access to shared resources. The QK mutex uses the priority-ceiling protocol to avoid priority inversions. Refer to Chapter 10 for more information.

www.nea

lines in the flowcharts, the Quickstart application spends most of its time in the tight "event loops" designed to busy-wait for certain events, such as the screen update event. In contrast, the "Fly 'n' Shoot" application spends most of its time right in the main loop. The QP framework dispatches any available event to the appropriate state machine that handles the event and returns quickly to the main loop without ever waiting for events internally.

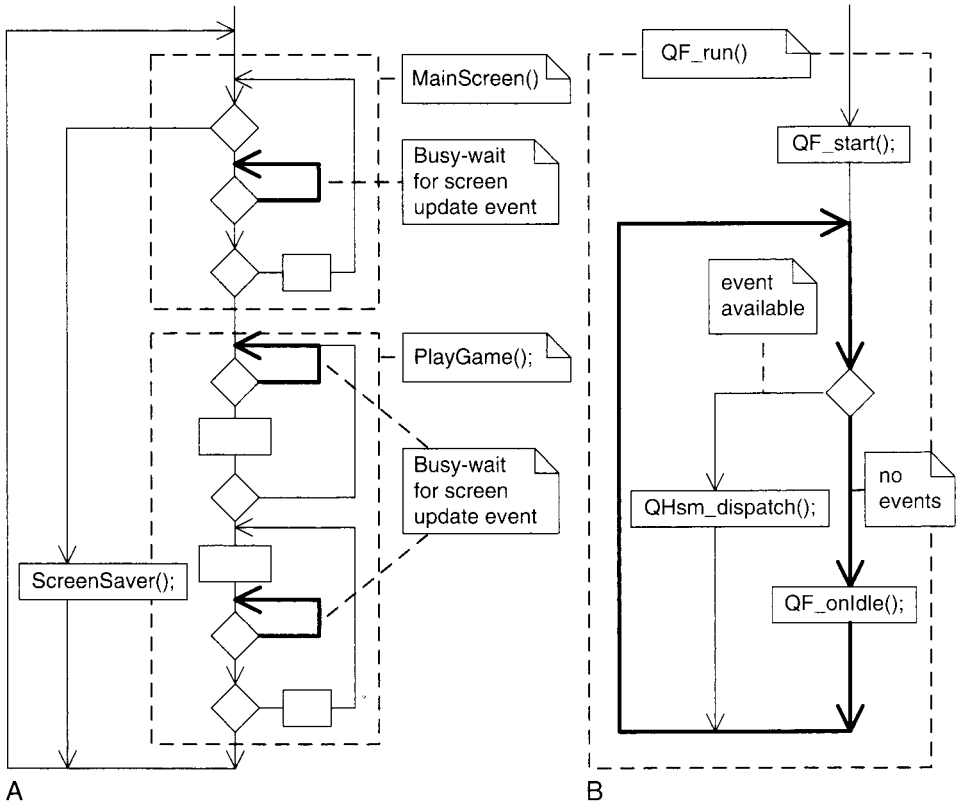

Figure 1.11: The control flow in the Quickstart application (A) and the "Fly 'n' Shoot" example (B). The heavy lines represent the most frequently exercised paths through the code.

The Quickstart application has much more convoluted flow of control than the "Fly 'n' Shoot" example because the traditional solution is very specific to the problem at hand whereas the state-machine approach is generic. The Quickstart application is structured very much like a traditional sequential program that tries to stay in control

from the beginning to the end. From time to time, the application pauses to busy-wait for a certain event, whereas the code is generally not ready to handle any other events than the one it chooses to wait for. All this contributes to the inflexibility of the design. Adding new events is hard because the whole structure of the intervening code is designed to accept only very specific events and would need to change dramatically to accommodate new events. Also, while busy-waiting for the screen update event (equivalent to the `TIME_TICK` event in "Fly 'n' Shoot" example), the application is really not responsive to any other events. The task-level response is hard to characterize and generally depends on the event type. The timing established by the hard-coded waiting for the existing events might not work well for new events.

In contrast, the "Fly 'n' Shoot" application has a much simpler control flow that is purely event-driven and completely generic (see Figure 1.11(B)). The context of each active object component is represented as the current state of a state machine, rather than as a certain place in the code. That way, hanging in tight "event loops" around certain locations in the code corresponding to the current context is unnecessary. Instead, a state machine remembers the context very efficiently as a small data item (the *state-variable;* see Chapter 3). After processing of each event, the state machine can return to the common event loop that is designed generically to handle all kinds of events. For every event, the state machine naturally picks up where it left off and moves on to the next state, if necessary. Adding new events is easy in this design because a state machine is responsive to any event at any time. An event-driven, state-machine-based application is incomparably more flexible and resilient to change than the traditional one.

NOTE

The generic event loop can also very easily detect the situation when no events are available, in which case the QP framework calls the `QF_onIdle()` function (see Figure 1.11(B)). This callback function is designed to be customized by the application and is the ideal place to put the CPU in a low-power sleep mode to conserve the power. In contrast, the traditional approach does not offer any single place to transition to the low-power sleep mode and consequently is much less friendly for implementing truly low-power designs.

1.10 Summary

If you've never done event-driven programming before, the internal structure of the "Fly 'n' Shoot" game must certainly represent a big paradigm shift for you. In fact,

www.pbookshop.com

I hope that it actually blows your mind, because otherwise I'm not sure that you really appreciate the complete reversal of control of an event-driven program compared to the traditional sequential code. This reversal of control, known as the Hollywood Principle (don't call us, we'll call *you*), baffles many newcomers, who often find it "mind-boggling," "backward," or "weird."

The "Fly 'n' Shoot" game is by no means a big application, but at the same time it is definitely *not* trivial, either. You shouldn't worry if you don't fully understand it at the first reading. In the upcoming chapters, I will provide a closer look at the state machine design and coding techniques. In Part II, I discuss the features, implementation, and porting of the QF real-time framework.

My main goal in this chapter was just to introduce you to the event-driven paradigm and the modern state machines to convince you that these powerful concepts aren't particularly hard to implement directly in C or C++. Indeed, I hope you noticed that the actual coding of the nontrivial "Fly 'n' Shoot" game wasn't a big deal at all. All you needed to know was just a few cookie-cutter rules for coding state machines and familiarity with a few framework services for implementing the actions.

While the coding turned out to be essentially a nonissue; the bulk of the programming effort was spent on the *design* of the application. At this point, I hope that the "Fly 'n' Shoot" example helps you get the big picture of how the method works. Under the event-driven model, the program structure is divided into two rough groups: events and state machine components (active objects). An event represents the occurrence of something interesting. A state machine codifies the reactions to the events, which generally depend both on the nature of the event and on the state of the component. While events often originate from the outside of your program, such as time ticks or button presses in the "Fly 'n' Shoot" game, events can also be generated internally by the program itself. For example, the Mine components generate notification events when they detect a collision with the Missile or the Ship.

An event-driven program executes by constantly checking for possible events and, when an event is detected, dispatching the event to the appropriate state machine component (see Figure 1.11(B)). For this approach to work, the events must be checked continuously and frequently. This implies that the state machines must execute quickly so that the program can get back to checking for events. To meet this requirement, a state machine cannot go into a condition where it is busy-waiting for some long or indeterminate time. The most common example of this would be a `while` loop inside a state-handler function, where the condition for termination was not under program

control—for instance, the button press. This kind of program structure, an indefinite loop, is referred to as "blocking" code,[6] and you saw examples of it in the Quickstart application (see Figure 1.11(A)). For the event-driven programming model to work, you must only write "nonblocking" code [Carryer 05].

Finally, the "Fly 'n' Shoot" example demonstrates the use of the event-driven platform called QP, which is a collection of components for building event-driven applications. The QF real-time framework component embodies the Hollywood Principle by calling the application code, not the other way around. Such an arrangement is very typical for event-driven systems and application frameworks similar to QF are at the heart of virtually every design automation tool on the market today.

The QF framework operates in the "Fly 'n' Shoot" game in its simplest configuration, in which QF runs on a bare-metal target processor without any operating system. QF can also be configured to work with the build-in preemptive real-time kernel called QK (see Chapter 10) or can be easily ported to almost any traditional OS or RTOS (see Chapter 8). In fact, you can view the QF framework itself as a high-level, event-driven, real-time operating system.

[6] In the context of a multitasking operating system the "blocking" code corresponds to waiting on a semaphore, event flag, message mailbox, or other such operating system primitive.

www.newnespress.com

Licensing Policy for QP and QP-nano

Any licensor of open source software should consider dual licensing options as a way of attracting new customers.
—Lawrence Rosen, general counsel and secretary of Open Source Initiative (OSI)

All software described in this book and available for download from the companion Website at `http://www.quantum-leaps.com/psicc2` or any other sources is available under a *dual-licensing* model, in which both the open-source software distribution mechanism and traditional closed-source software licensing models are combined.

A.1 Open-Source Licensing

All software described in this book is available under the GNU General Public License Version 2 (GPL2), as published by the Free Software Foundation and reproduced in Section A.5 of this Appendix.

The GPL2 license is probably the best known and most established open-source license. It is fully compatible with the Open Source Definition, is endorsed by the Free Software Foundation, and has been approved by the Open Source Initiative [Rosen 05].

Note that GPL2 applies to software based not on how it is used but on how it is *distributed*. In this respect GPL2 can be restrictive because GPL2 Section 2(b) requires that if you *distribute* the original software or any derivative works based on the software under copyright law, you must release all such derivative works also under the terms of the GPL2 open-source license. GPL2 clearly specifies that distributing the original software or any derivative works based on it in *binary form* (e.g., embedded inside devices) also represents distribution of the software.

To read more about open-source licensing for QP or QP-nano or to contribute work to the open-source community, visit `www.quantum-leaps.com/licensing/open.htm` or contact Quantum Leaps, LLC via the following e-mail address: `dev@quantum-leaps.com`.

A.2 Closed-Source Licensing

If you are developing and distributing traditional closed-source applications, you might purchase one of the *commercial licenses*, which are specifically designed for users interested in retaining the *proprietary* status of their code. This alternative licensing is possible because Quantum Leaps LLC owns all intellectual property in the QP and QP-nano software and as the copyright owner can license the software any number of ways. The Quantum Leaps commercial licenses expressly supersede the GPL2 open-source license. This means that when you license the software under a commercial license, you specifically do not use the software under the open-source license and therefore you are not subject to any of its terms.

To read more about the commercial licensing options, pricing, and technical support and to request a commercial license, visit `www.quantum-leaps.com/licensing` or contact Quantum Leaps LLC via the following e-mail address: `info@quantum-leaps.com`.

A.3 Evaluating the Software

The open character of the QP and QP-nano software allows anybody to evaluate the software under the GPL2 open-source license. In this respect, evaluating dual-licensed software delivers a large advantage over highly supervised trial licensing practices still so common in the embedded systems marketplace.

Obviously, when you decide to *distribute* any portion of the original software or any derivative works based on it, you must either make your software available to the public, as required by GPL2 Section 2(b), or you can purchase one of the commercial licenses, as described in Section A.2.

A.4 Nonprofits, Academic Institutions, and Private Individuals

If you represent a nonprofit organization or an academic institution, you should consider publishing your application as an open-source software project using the GPL2

www.newnes.com

license. Thereby you'll be able to use the QP or QP-nano software free of charge under the GPL2 license. If you have strong reasons not to publish your application in accordance with GPL2, you should purchase one of the commercial licenses. Note that nonprofit organizations can apply for free commercial licenses, which will be liberally granted.

If you are a private individual, you are free to use QP or QP-nano software for your personal applications as long as you do not *distribute* them. If you distribute them in any way, you must make a decision between the GPL2 and the commercial licenses.

Note that these rules apply even if you ship distribute [illegible] applications.

A.5 GNU General Public License Version 2

GNU GENERAL PUBLIC LICENSE
Version 2, June 1991

Copyright (C) 1989, 1991 Free Software Foundation, Inc.,
51 Franklin Street, Fifth Floor, Boston, MA 02110-1301 USA
Everyone is permitted to copy and distribute verbatim copies of this license document, but changing it is not allowed.

Preamble

The licenses for most software are designed to take away your freedom to share and change it. By contrast, the GNU General Public License is intended to guarantee your freedom to share and change free software--to make sure the software is free for all its users. This General Public License applies to most of the Free Software Foundation's software and to any other program whose authors commit to using it. (Some other Free Software Foundation software is covered by the GNU Lesser General Public License instead.) You can apply it to your programs, too.

When we speak of free software, we are referring to freedom, not price. Our General Public Licenses are designed to make sure that you have the freedom to distribute copies of free software (and charge for this service if you wish), that you receive source code or can get it if you want it, that you can change the software or use pieces of it in new free programs; and that you know you can do these things.

To protect your rights, we need to make restrictions that forbid anyone to deny you these rights or to ask you to surrender the rights. These restrictions translate to certain responsibilities for you if you distribute copies of the software, or if you modify it.

For example, if you distribute copies of such a program, whether gratis or for a fee, you must give the recipients all the rights that you have. You must make sure that they, too, receive or can get the source code. And you must show them these terms so they know their rights.

We protect your rights with two steps: (1) copyright the software, and (2) offer you this license which gives you legal permission to copy, distribute and/or modify the software.

Also, for each author's protection and ours, we want to make certain that everyone understands that there is no warranty for this free software. If the software is modified by someone else and passed on, we want its recipients to know that what they have is not the original, so that any problems introduced by others will not reflect on the original authors' reputations.

Finally, any free program is threatened constantly by software patents. We wish to avoid the danger that redistributors of a free program will individually obtain patent licenses, in effect making the program proprietary. To prevent this, we have made it clear that any patent must be licensed for everyone's free use or not licensed at all.

The precise terms and conditions for copying, distribution and modification follow.

GNU GENERAL PUBLIC LICENSE
TERMS AND CONDITIONS FOR COPYING, DISTRIBUTION AND MODIFICATION

0. This License applies to any program or other work which contains a notice placed by the copyright holder saying it may be distributed under the terms of this General Public License. The "Program", below, refers to any such program or work, and a "work

mespress.com

based on the Program" means either the [illegible] under copyright law: that is to say, a work containing the Program or a portion of it, either verbatim [illegible] translated into another language. (Hereinafter, translation is included without limitation in the term [illegible] addressed as "you".
Activities other than copying, distribution [illegible] ered by this License; they are outside its scope. The act of running the Program is not restricted, and the [illegible] ered only if its contents constitute a work based on the Program (independent of having been made [illegible] the Program [illegible]
Whether that is true depends on what the Program [illegible]

1. You may copy and distribute verbatim copies [illegible] code as you receive it, in any medium, provided that you conspicuously and appropriately publish on each copy an appropriate copyright notice and disclaimer of warranty; keep intact all the notices that refer to this License and to the absence [illegible] and give any other recipients of the Program a copy of this License along with the Program.
You may charge a fee for the physical act of transferring a copy, and you may at your option offer warranty protection in exchange for a fee.

2. You may modify your copy or copies of the Program or any portion of it, thus forming a work based on the Program, and copy and distribute such modifications or work under the terms of Section 1 above, provided that you also meet all of these conditions:

   a) You must cause the modified files to carry prominent notices stating that you changed the files and the date of any change.

   b) You must cause any work that you distribute or publish, that in whole or in part contains or is derived from the Program or any part thereof, to be licensed as a whole at no charge to all third parties under the terms of this License.

   c) If the modified program normally reads commands interactively when run, you must cause it, when started running for such interactive use in the most ordinary way, to print or display an announcement including an appropriate copyright notice and a notice that there is no warranty (or else, saying that you provide a warranty) and that users may redistribute the program under these conditions, and telling the user how to view a copy of this License. (Exception: if the Program itself is interactive but does not normally print such an announcement, your work based on the Program is not required to print an announcement.)

   These requirements apply to the modified work as a whole. If identifiable sections of that work are not derived from the Program, and can be reasonably considered independent and separate works in themselves, then this License, and its terms, do not apply to those sections when you distribute them as separate works. But when you distribute the same sections as part of a whole which is a work based on the Program, the distribution of the whole must be on the terms of this License, whose permissions for other licensees extend to the entire whole, and thus to each and every part regardless of who wrote it.
   Thus, it is not the intent of this section to claim rights or contest your rights to work written entirely by you; rather, the intent is to exercise the right to control the distribution of derivative or collective works based on the Program.
   In addition, mere aggregation of another work not based on the Program with the Program (or with a work based on the Program) on a volume of a storage or distribution medium does not bring the other work under the scope of this License.

3. You may copy and distribute the Program (or a work based on it, under Section 2) in object code or executable form under the terms of Sections 1 and 2 above provided that you also do one of the following:

   a) Accompany it with the complete corresponding machine-readable source code, which must be distributed under the terms of Sections 1 and 2 above on a medium customarily used for software interchange; or,

   b) Accompany it with a written offer, valid for at least three years, to give any third party, for a charge no more than your cost of physically performing source distribution, a complete machine-readable copy of the corresponding source code, to be distributed under the terms of Sections 1 and 2 above on a medium customarily used for software interchange; or,

   c) Accompany it with the information you received as to the offer to distribute corresponding source code. (This alternative is allowed only for noncommercial distribution and only if you received the program in object code or executable form with such an offer, in accord with Subsection b above.)

   The source code for a work means the preferred form of the work for making modifications to it. For an executable work, complete source code means all the source code for all modules it contains, plus any associated interface definition files, plus the scripts used to control compilation and installation of the executable. However, as a special exception, the source code distributed need not include anything that is normally distributed (in either source or binary form) with the major components (compiler, kernel, and so on [illegible] operating system on which the executable runs, unless that component itself accompanies the executable.

www.newnespress.com

If distribution of executable or object code is made by offering access to copy from a designated place, then offering equivalent access to copy the source code from the same place counts as distribution of the source code, even though third parties are not compelled to copy the source along with the object code.

4. You may not copy, modify, sublicense, or distribute the Program except as expressly provided under this License. Any attempt otherwise to copy, modify, sublicense or distribute the Program is void, and will automatically terminate your rights under this License. However, parties who have received copies, or rights, from you under this License will not have their licenses terminated so long as such parties remain in full compliance.

5. You are not required to accept this License, since you have not signed it. However, nothing else grants you permission to modify or distribute the Program or its derivative works. These actions are prohibited by law if you do not accept this License. Therefore, by modifying or distributing the Program (or any work based on the Program), you indicate your acceptance of this License to do so, and all its terms and conditions for copying, distributing or modifying the Program or works based on it.

6. Each time you redistribute the Program (or any work based on the Program), the recipient automatically receives a license from the original licensor to copy, distribute or modify the Program subject to these terms and conditions. You may not impose any further restrictions on the recipients' exercise of the rights granted herein. You are not responsible for enforcing compliance by third parties to this License.

7. If, as a consequence of a court judgment or allegation of patent infringement or for any other reason (not limited to patent issues), conditions are imposed on you (whether by court order, agreement or otherwise) that contradict the conditions of this License, they do not excuse you from the conditions of this License. If you cannot distribute so as to satisfy simultaneously your obligations under this License and any other pertinent obligations, then as a consequence you may not distribute the Program at all. For example, if a patent license would not permit royalty-free redistribution of the Program by all those who receive copies directly or indirectly through you, then the only way you could satisfy both it and this License would be to refrain entirely from distribution of the Program.
   If any portion of this section is held invalid or unenforceable under any particular circumstance, the balance of the section is intended to apply and the section as a whole is intended to apply in other circumstances.
   It is not the purpose of this section to induce you to infringe any patents or other property right claims or to contest validity of any such claims; this section has the sole purpose of protecting the integrity of the free software distribution system, which is implemented by public license practices. Many people have made generous contributions to the wide range of software distributed through that system in reliance on consistent application of that system; it is up to the author/donor to decide if he or she is willing to distribute software through any other system and a licensee cannot impose that choice.
   This section is intended to make thoroughly clear what is believed to be a consequence of the rest of this License.

8. If the distribution and/or use of the Program is restricted in certain countries either by patents or by copyrighted interfaces, the original copyright holder who places the Program under this License may add an explicit geographical distribution limitation excluding those countries, so that distribution is permitted only in or among countries not thus excluded. In such case, this License incorporates the limitation as if written in the body of this License.

9. The Free Software Foundation may publish revised and/or new versions of the General Public License from time to time. Such new versions will be similar in spirit to the present version, but may differ in detail to address new problems or concerns.
   Each version is given a distinguishing version number. If the Program specifies a version number of this License which applies to it and "any later version", you have the option of following the terms and conditions either of that version or of any later version published by the Free Software Foundation. If the Program does not specify a version number of this License, you may choose any version ever published by the Free Software Foundation.

10. If you wish to incorporate parts of the Program into other free programs whose distribution conditions are different, write to the author to ask for permission. For software which is copyrighted by the Free Software Foundation, write to the Free Software Foundation; we sometimes make exceptions for this. Our decision will be guided by the two goals of preserving the free status of all derivatives of our free software and of promoting the sharing and reuse of software generally.

NO WARRANTY

11. BECAUSE THE PROGRAM IS LICENSED FREE OF CHARGE, THERE IS NO WARRANTY FOR THE PROGRAM, TO THE EXTENT PERMITTED BY APPLICABLE LAW. EXCEPT WHEN OTHERWISE STATED IN WRITING THE COPYRIGHT HOLDERS AND/OR OTHER PARTIES PROVIDE THE PROGRAM "AS IS" WITHOUT WARRANTY OF ANY KIND, EITHER EXPRESSED

OR IMPLIED, INCLUDING, BUT NOT LIMITED TO, THE IMPLIED WARRANTIES OF MERCHANTABILITY AND FITNESS FOR A PARTICULAR PURPOSE. THE ENTIRE RISK AS TO THE QUALITY AND PERFORMANCE OF THE PROGRAM IS WITH YOU. SHOULD THE PROGRAM PROVE DEFECTIVE, YOU ASSUME THE COST OF ALL NECESSARY SERVICING, REPAIR OR CORRECTION.

12. IN NO EVENT UNLESS REQUIRED BY APPLICABLE LAW OR AGREED TO IN WRITING WILL ANY COPYRIGHT HOLDER, OR ANY OTHER PARTY WHO MAY MODIFY AND/OR REDISTRIBUTE THE PROGRAM AS PERMITTED ABOVE, BE LIABLE TO YOU FOR DAMAGES, INCLUDING ANY GENERAL, SPECIAL, INCIDENTAL OR CONSEQUENTIAL DAMAGES ARISING OUT OF THE USE OR INABILITY TO USE THE PROGRAM (INCLUDING BUT NOT LIMITED TO LOSS OF DATA OR DATA BEING RENDERED INACCURATE OR LOSSES SUSTAINED BY YOU OR THIRD PARTIES OR A FAILURE OF THE PROGRAM TO OPERATE WITH ANY OTHER PROGRAMS), EVEN IF SUCH HOLDER OR OTHER PARTY HAS BEEN ADVISED OF THE POSSIBILITY OF SUCH DAMAGES.

END OF TERMS AND CONDITIONS

How to Apply These Terms to Your New Programs

If you develop a new program, and you want it to be of the greatest possible use to the public, the best way to achieve this is to make it free software which everyone can redistribute and change under these terms.
To do so, attach the following notices to the program. It is safest to attach them to the start of each source file to most effectively convey the exclusion of warranty; and each file should have at least the "copyright" line and a pointer to where the full notice is found.

<one line to give the program's name and a brief idea of what it does.>
Copyright (C) <year> <name of author>

This program is free software; you can redistribute it and/or modify it under the terms of the GNU General Public License as published by the Free Software Foundation; either version 2 of the License, or (at your option) any later version.
This program is distributed in the hope that it will be useful, but WITHOUT ANY WARRANTY; without even the implied warranty of MERCHANTABILITY or FITNESS FOR A PARTICULAR PURPOSE. See the GNU General Public License for more details.
You should have received a copy of the GNU General Public License along with this program; if not, write to the Free Software Foundation, Inc., 51 Franklin Street, Fifth Floor, Boston, MA 02110-1301 USA.
Also add information on how to contact you by electronic and paper mail.

If the program is interactive, make it output a short notice like this when it starts in an interactive mode:

Gnomovision version 69, Copyright (C) year name of author
Gnomovision comes with ABSOLUTELY NO WARRANTY; for details type 'show w'.

This is free software, and you are welcome to redistribute it under certain conditions; type 'show c' for details.

The hypothetical commands 'show w' and 'show c' should show the appropriate parts of the General Public License. Of course, the commands you use may be called something other than 'show w' and 'show c'; they could even be mouse-clicks or menu items--whatever suits your program. You should also get your employer (if you work as a programmer) or your school, if any, to sign a "copyright disclaimer" for the program, if necessary. Here is a sample; alter the names:

Yoyodyne, Inc., hereby disclaims all copyright interest in the program
'Gnomovision' (which makes passes at compilers) written by James Hacker.

<signature of Ty Coon>, 1 April 1989
Ty Coon, President of Vice

This General Public License does not permit incorporating your program into proprietary programs. If your program is a subroutine library, you may consider it more useful to permit linking proprietary applications with the library. If this is what you want to do, use the GNU Lesser General Public License instead of this License.

www.newnespress.com

Embedded Systems / Programming / Software

PRACTICAL UML STATECHARTS IN C/C++

SECOND EDITION Event-Driven Programming for Embedded Systems

Miro Samek

Make the Transition from Traditional Sequential to Modern Event-Driven Programming Easily with This Book!

Practical UML Statecharts in C/C++, Second Edition bridges the gap between high-level abstract concepts of the Unified Modeling Language (UML) and the actual programming aspects of modern hierarchical state machines (UML statecharts). The book describes a lightweight, open source, event-driven infrastructure, called QP. This infrastructure enables direct manual coding of UML statecharts and concurrent event-driven applications in C or C++ without big tools.

- **Understand State Machine Concepts**
  From traditional finite state automated to modern UML state machines
- **Master State Machine Coding Techniques and Design Patterns**
  Learn with executable examples
- **Unlock Key Event-driven Programming Concepts**
  Including inversion of control, blocking versus non-blocking code, run-to-completion (RTC) execution semantics
- **Thoroughly Immerse Yourself in the QP Infrastructure**
  QP Works with almost any OS/RTOS taking advantage of existing device drivers, communication stacks, and other middleware
- **Hands-on Learning at** *http://elsevierdirect.com/companions/9780750687065*
  The accompanying Web site contains complete open source code for QP along with ports to 80x86, ARM Cortex-M3, MSP430, and Linux, as well as, all examples described in the book

INCLUDES FREE ONLINE MEMBERSHIP

Your FREE Newnes online membership gives you access to 4 downloadable selections from leading experts on the cutting edge!

Dr. Miro Samek is the founder and president of Quantum Leaps, an open source company providing lightweight, state machine-based, event-driven application frameworks for embedded systems. He has written numerous articles for magazines, including a column for *C/C++ Users Journal*, is a regular speaker at the *Embedded Systems Conferences*, and serves on the editorial review board of the *Embedded Systems Design* magazine. For a number of years, he worked in various Silicon Valley companies as an embedded software architect and before that he worked as an embedded software engineer at GE Medical Systems (now GE Healthcare). Dr. Samek earned his Ph.D. in nuclear physics at GSI (Darmstadt, Germany).

ELSEVIER

Newnes
An Imprint of Elsevier
www.newnespress.com

If you enjoyed this book please post a review to your favorite online bookstore today.

ISBN: 978-0-7506-8706-5
90000
9 780750 687065