Doppler Ultrasonic Flow Meter

Series DFX

DESCRIPTION

The DFX ultrasonic Doppler flow meter measures flows of liquids containing suspended particles or aerated liquids. Used with the DT9 clamp-on, non-intrusive transducers, the meter is suitable for sewage and mud slurries and can be used on most pipes constructed from metal or plastic.

The DT9 transducer for the DFX meter is rated to Type 6 (IP67) and has the ability to work with temperatures up to 194° F (90° C).

APPLICATIONS

Successful application of Doppler ultrasonic flow meters relies on three physical constraints:

- The liquid flowing within the pipe must contain 100 ppm of useful sonic suspended reflectors. Dissolved solids do not generate reflections and are not relevant.
- A significant portion of the ultrasound energy generated by the transducer must reach the sonic reflectors. The ultrasonic transducer must be acoustically coupled to the outside of a pipe (using grease or RTV couplant) and the pipe must permit ultrasound to pass without significant attenuation. Most pipes constructed of solid, homogenous materials meet this qualification. Pipes that cause application difficulty include concrete pressure pipes, woodstave pipes, Teflon®-lined pipes and fiberglass reinforced pipes.
- The pipe must be completely filled with liquid when measurements are made. The DFX microprocessor assumes that the pipe is completely full when it calculates flow rate. Use on partially-filled pipes may result in inaccurate readings.

BENEFITS

- Minimal installation time: the DFX may be installed and fully operational within minutes. For most homogeneous pipe materials, there is no need to break into pipelines.
- Minimal material costs: clamp-on sensor eliminates the need for in-line flanges, pipe fittings, strainers or filters.
- Reduced down-time: installation may be performed on full pipes and active systems. There is no need to shut down the process for installation or maintenance.
- Lower maintenance costs: with no moving parts, there is nothing on the DFX to wear down.

FEATURES

- Non-intrusive, clamp-on transducers for most pipes from 0.25 in. (6 mm) and above.
- Wide velocity range: 0.15…30 fps (0.0…9 mps).
- Flexibility: with automatic gain control and in-field linearization, the DFX will adapt to a wide variety of applications.

OPERATION

The DFX flow meter operates by transmitting ultrasonic sound from its transmitting transducer through the pipe wall into the flowing liquid. Each transducer contains piezoelectric crystals to transmit this signal. The sound will be reflected by useful sonic reflectors suspended within the liquid and recorded by the receiving transducer (see *Figure 1*). If the reflectors are moving within the sound transmission path, sound waves will be reflected at a frequency shifted (Doppler shift) from the transmitted frequency. The difference between the reflected frequencies and transmitted frequencies is directly proportional to the speed of the sonic reflectors, resulting in a liquid flow rate that is converted to various user defined measuring units.

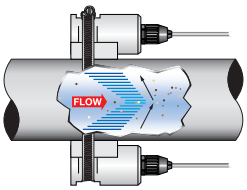

Figure 1: DFX operation

Badger Meter

DPP-DS-01296-EN-05 (August 2019)

Product Data Sheet

CLAMP-ON TRANSDUCER OPTIONS

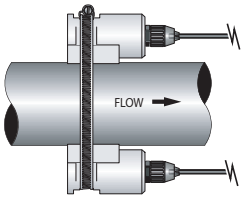

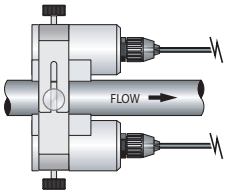

SPECIFICATIONS

Velocity Range	0.15…30 fps (0.05…9 mps)		
Accuracy	±2% full scale, over calibrated span		
Liquid Types	Liquids containing a minimum of 100 ppm of useful sonic suspended reflectors greater than 35 micron size, and at least 25% of the overall particle volume is larger than 100 microns		
Monitor Enclosure	NEMA 4X (IP 66), polycarbonate, stainless steel, brass, plated-steel mounting brackets 7.00 in. H × 5.75 in. W × 3.88 in. D (178 mm × 146 mm × 99 mm)		
Power Supply	115/100/230V AC 50/60 Hz ±15% @ 17V A max; 12…28V DC @ 7V A max		
Display	2-line × 8 character LCD; LED backlighting; 8-digit rate, 8-digit total (resettable)		
Units	User configured: Feet, US gallons, ft^3, Mil-gal, meters, liters, Mil-ft^3, m^3, Mil-liters, acre-feet, oil barrels (42 US gallons), liquid barrel (32.5 US gallons), lb, Kg		
Rate Interval	Second, minute, hour, day. Totalizer exponent: E-2 to E+6 (x $^1/100$ to x 1,000,000)		
Response Time	User selectable: 6…60 seconds		
Output Options	4…20 mA		800 ohms max, internal or external power supply, 12-bit resolution
	Optically Isolated Dual Relay		Independently configured; Form C, 200V AC @ 0.5 A resistive; rate alarm, totalizer pulse, error
	Rate Pulse	500 mV AC	2500 Hz max, 12-bit resolution, 500 mV AC into 2 K Ohm minimum;
		Open collector	2500 Hz max, 1 A at 100 V max
Multiple Meters	Synchronization provision included—utilized for multiple meter, single pipe/manifold system. Up to four meters may be interconnected, up to 100 feet (30 meters) apart		
Keypad	4-key, tactile		
Ambient Conditions	–40…185° F (–40…85° C); 0…95% relative humidity (non-condensing)		
Approvals	(Std.) General Safety US and Canada. Certified to UL 61010-1 and CSA C22.2 No. 61010-1		
Transducer Type	Compression-mode Ultrasonic; 625 kHz		
Construction	Standard Clamp-On		Type 6* (IP 67) –40…194° F (–40…90° C) CPVC, Ultem®, Nylon, PVC (Cable Jacket), Aluminum (small pipe) *Depth of 1 meter for 30 minutes
	Optional Flexible Armored Conduit		Zinc-plated steel, PVC
Pipe Sizes	Standard Clamp-On Transducers		1 inch (25 mm) and above
	Small Pipe Clamp-On Transducers		0.25…1 inch (6…25 mm)
	Standard Lengths		20, 50 and 100 foot (6.1, 15 and 30 meter), 78 Ohm twinax cable
	Optional Lengths		To 990 feet (297 meters), 75 Ohm RG59 cable

DIMENSIONS

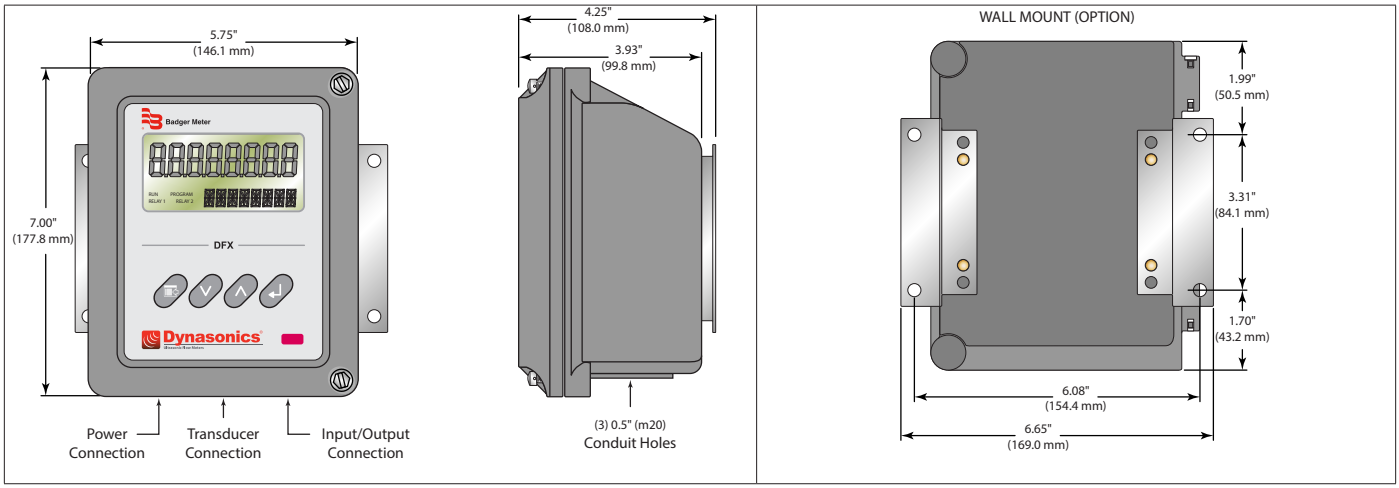

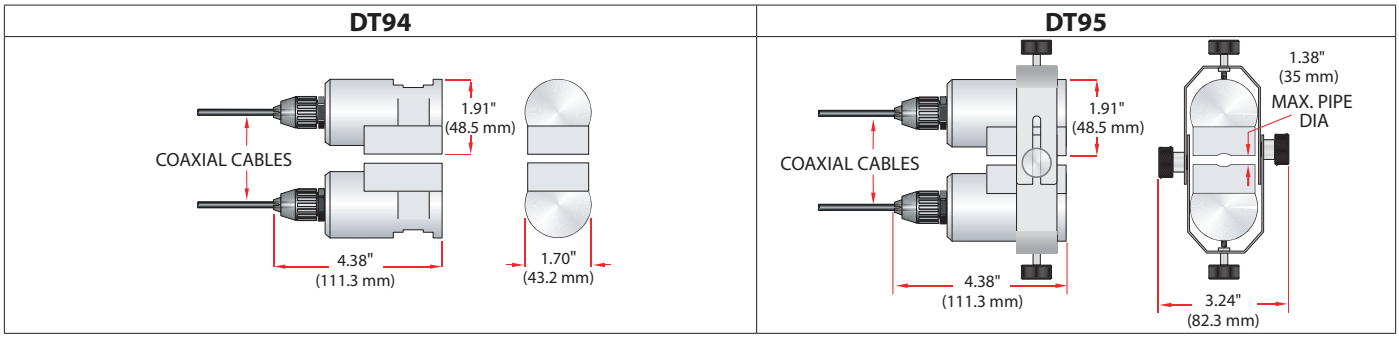

PART NUMBER CONSTRUCTION

DDFX Digital Doppler Ultrasonic Flow Transmitter

D D F X D 2 - ☐ ☐ ☐ A - N N

Transmitter Type
2) Rate and Totalizer

Power Supply
A) 115V AC
B) 230V AC
C) 100V AC
E) 9…28V DC

Input/Output 1
N) None
1) 4…20 mA
2) Dual Relay
3) Rate Pulse

Input/Output 2
N) None
1) 4…20 mA
2) Dual Relay
3) Rate Pulse

Totalizer
A) Eight digit resettable

Approvals
N) General safety to US/Canadian standards

Options
N) None

DT9 Doppler Ultrasonic Transducer Set

D T 9 ☐ - ☐ ☐ ☐ - ☐ ☐ ☐ ☐ - ☐

Piping Environment*
4) Std temp/Std pipe
5) Std temp/small pipe
*Std Temp: Maximum (+194° F) (+90° C)
Small Pipe: 1/4…1 in. (6…25 mm)
Std. Pipe: 1 in. (25 mm) and above

Cable Length
020) 20 ft (6 m)
050) 50 ft (15 m)
100) 100 ft (30 m)
Max. length: 990 ft (297 m) in 10 ft (3 m) increments

Conduit Type
N) None
A) Flexible Armored

Conduit Length
000) 0 ft (0 m)
020) 20 ft (6 m)
050) 50 ft (15 m)
100) 100 ft (30 m)
Max. length: 990 ft (297 m) in 10 ft (3 m) increments

Options
N) General safety to US/Canadian standards

NOTE: All DT9 transducers include acoustic couplant. DT94 includes four (4) 36 in. (890 mm) mounting straps.

Control. Manage. Optimize.

Dynasonics is a registered trademark of Badger Meter, Inc. Other trademarks appearing in this document are the property of their respective entities. Due to continuous research, product improvements and enhancements, Badger Meter reserves the right to change product or system specifications without notice, except to the extent an outstanding contractual obligation exists. © 2019 Badger Meter, Inc. All rights reserved.

www.badgermeter.com

The Americas | Badger Meter | 4545 West Brown Deer Rd | PO Box 245036 | Milwaukee, WI 53224-9536 | 800-876-3837 | 414-355-0400
México | Badger Meter de las Americas, S.A. de C.V. | Pedro Luis Ogazón N°32 | Esq. Angelina N°24 | Colonia Guadalupe Inn | CP 01050 | México, DF | México | +52-55-5662-0882
Europe, Eastern Europe Branch Office (for Poland, Latvia, Lithuania, Estonia, Ukraine, Belarus) | Badger Meter Europe | ul. Korfantego 6 | 44-193 Knurów | Poland | +48-32-236-8787
Europe, Middle East and Africa | Badger Meter Europa GmbH | Nurtinger Str 76 | 72639 Neuffen | Germany | +49-7025-9208-0
Europe, Middle East Branch Office | Badger Meter Europe | PO Box 341442 | Dubai Silicon Oasis, Head Quarter Building, Wing C, Office #C209 | Dubai / UAE | +971-4-371 2503
Slovakia | Badger Meter Slovakia s.r.o. | Racianska 109/B | 831 02 Bratislava, Slovakia | +421-2-44 63 83 01
Asia Pacific | Badger Meter | 80 Marine Parade Rd | 19-07 Parkway Parade | Singapore 449269 | +65-63464836
Switzerland | Badger Meter Swiss AG | Mittelholzerstrasse 8 | 3006 Bern | Switzerland | +41-31-932 01 11

Legacy Document Numbers: 06-DPP-BR-00011