M-Series® M5000

Electromagnetic Flow Meter

DESCRIPTION

Designed, developed and manufactured under strict quality standards, the M-Series M5000 electromagnetic meter features sophisticated, processor-based signal conversion with accuracies of ± 0.4%. Based on Faraday's Law of Induction, these meters can measure potable water, reclaimed water, ground water and clear, water-based applications that have minimal electrical conductivity.

The flow meter is a stainless steel tube lined with a non-conductive material. Outside the tube are two DC-powered electromagnetic coils positioned opposite each other. Perpendicular to the coils are two electrodes inserted into the flow tube. The energized coils create a magnetic field across the diameter of the pipe.

As a conductive fluid flows through the magnetic field, a voltage is induced across the electrodes. This voltage is proportional to the average flow velocity of the fluid and is measured by the two electrodes. This induced voltage is then amplified and digitally processed by the converter to produce an accurate analog or digital signal. The signal can then be used to indicate flow rate and totalization, or to communicate to remote sensors and controllers. In addition, the processor controls zero-flow stability, frequency outputs, serial communications, and other parameters.

With no moving parts in the flow stream, there is no pressure loss. Also, accuracy is not affected by temperature, pressure, viscosity or density and there is practically no maintenance required.

ELECTRODES

When looking from the end of the meter into the inside bore, the two measuring electrodes are positioned at three o'clock and nine o'clock. M5000 mag meters have an "empty pipe detection" feature. This is accomplished with a third electrode positioned in the meter between twelve o'clock and one o'clock.

If this electrode is not covered by fluid for a minimum five-second duration, the meter will display an "empty pipe detection" condition, send out an error message, if desired, and stop measuring to maintain accuracy. When the electrode again becomes covered with fluid, the error message will disappear and the meter will continue measuring.

The wide selection of liner and electrode materials helps provide maximum compatibility and minimum maintenance over a long operating period. The M5000 amplifier can be integrally mounted to the detector, or if necessary, mounted remotely. The amplifier is housed in a NEMA 4X (IP66) enclosure.

OPERATION

In addition to using grounding rings, a grounding electrode (fourth electrode) can be built into the meter during manufacturing to assure proper grounding. The position of this electrode is at five o'clock.

APPLICATION

The M5000 mag meter is designed for applications without power line access, where flow is continuous, and when indication of rate and totalization are required. The M5000 can accurately measure fluid flow—whether the fluid is water or a highly corrosive liquid, very viscous, contains a moderate amount of solids, or requires special handling. Today, electronic meters are successfully used in industries including potable water, reclaimed water, food and beverage, pharmaceutical and chemical.

FEATURES

- Available in sizes 0.50…24 in. (15…600 mm)
- Battery powered
- ± 0.4% of measured value ± 2 mm/s accuracy independent of fluid viscosity, density and temperature
- Unaffected by most solids contained in fluids
- Pulsed DC magnetic field for zero point stability
- No pressure loss for low operational costs
- Corrosion resistant liners for long life
- Calibrated in state-of-the art facilities
- Integral and remote signal converter availability
- Optional grounding rings or grounding electrode
- Measurement largely independent of flow profile
- Low-power digital microcontroller (16 bit)
- Simple programming procedure
- Digital and infrared outputs
- Automatic zero-point stability
- Non-volatile programming
- NSF listed
- Data logging

Badger Meter

MAG-DS-00175-EN-08 (March 2020)

Product Data Sheet

SPECIFICATIONS

Flow Range	0.1…32.8 ft/s (0.03…10 m/s)	
Repeatability	± 0.1%	
Accuracy	± 0.4% of measured value ± 2 mm/s	
Minimum Fluid Conductivity	≥ 20 micro siemens/cm	
Pressure Limits	Maximum allowable non-shock pressure and temperature ratings for steel pipe flanges, according to American National Standard ANSI B16.5. Examples: 150-lb flange, rated 285 psi at ambient temperature; 300-lb flange rated 740 psi at ambient temperature.	
Fluid Temperature	**With Remote Amplifier:** PTFE 302° F (150° C), Hard rubber 178° F (80° C)	**With Meter-Mounted Amplifier:** PTFE 212° F (100° C), Hard rubber 178° F (80° C)
Ambient Temperature	– 4…140° F (–20…60° C)	
Flow Direction	Uni-directional or bi-directional. Two separate programmable totalizers for uni-directional measurement.	
Outputs (4 digital)	Galvanically isolated open collector, 30V DC maximum, 20 mA each, maximum output frequency at 100 Hz	
Outputs	ADE, High/low flow alarm (0…100% of flow), error alarm, empty pipe alarm, flow direction	
Communication	RS232 Modbus RTU, IrDA	
Empty Pipe Detection	Field-tunable for optimum performance based on specific application	
Min-Max Flow Alarm	Programmable outputs 0…100% of flow	
Low Flow Cut-Off	Programmable 0…10% of maximum flow	
Galvanic Separation	Functional 50 volts	
Pulse Width	Programmable 5…500 ms	
Coil Power	Pulsed DC	
Sampling Rate	Programmable from 1 to 63 seconds. Standard sampling period is 15 seconds.	
Display	Two lines x 15 characters (7 on top + 8 on bottom), LCD display	
Programming	Three external buttons	
Units of Measure	Gallons, ounces, MGD, liters, cubic meters, cubic feet, imperial gallon, barrel, hectoliter and acre feet	
Battery Life	10 years	
Power Supply	Internal lithium batteries 3.6 volt	
Processing	Low power microcontroller (16 bit)	
Amplifier Housing	NEMA 4X (IP66), cast aluminum, powder-coated paint	
Meter Housing Material	*Standard*: Carbon steel welded	
Pipe Spool Material	304 stainless steel	
Flanges	*Standard*: ANSI B16.5 Class 150 RF Cast steel; *Optional*: 316 stainless steel & 300 lb cast steel	
Liner Material	PTFE 0.5…24 in. , Hard rubber 1…24 in.	
Electrode Materials	*Standard*: Alloy C; *Optional*: 316 stainless steel	
Mounting	Detector-mount or remote wall mount (bracket supplied)	
Meter Enclosure Classification	NEMA 4X (IP66); *Optional*: Submersible NEMA 6P (IP67) or IP68, remote amplifier required	
Junction Box Enclosure Protection	For remote amplifier option: Powder coated die-cast aluminum, NEMA 4 (IP66)	
NSF Listed	Models with hard rubber liner 4 in. size and up; PTFE liner, all sizes.	
Cable Entries	1/2 in. NPT Cord Grip	
Optional Stainless Steel Grounding Rings	Meter Size / Thickness (of 1 ring) Up through 1 in. / 0.135 in. 12…24 in. / 0.187 in.	

DIMENSIONS IN INCHES (MILLIMETERS)

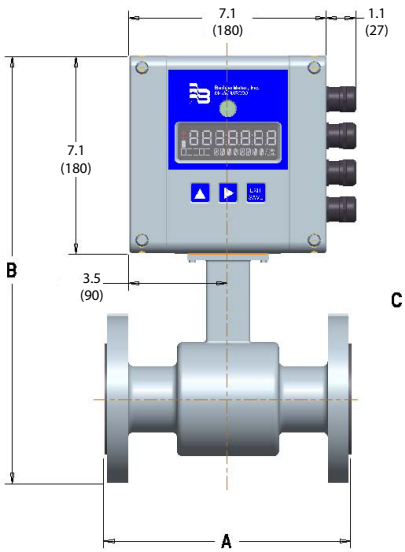

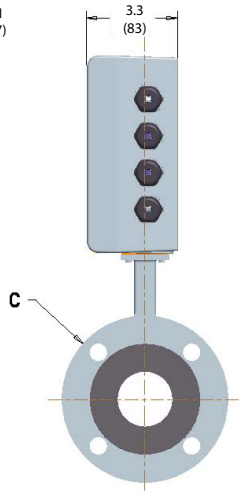

Meter with M5000 Amplifier

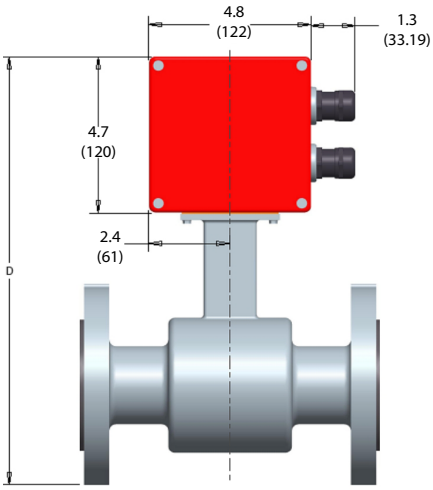

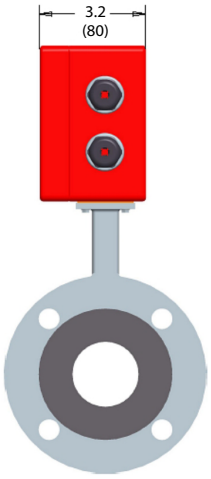

Meter with Junction Box for Remote M5000 Amplifier

Size		A		B		C		D		Est. Weight with Amplifier		Flow Range			
												LPM		GPM	
inch	mm	inch	mm	inch	mm	inch	mm	inch	mm	lb	kg	min	max	min	max
1/2	15	6.7	170	13.4	342	3.5	89	13.9	351	17	7.7	0.32	106	0.09	27
3/4	20	6.7	170	13.6	347	3.9	99	14	356	17	7.7	0.57	188	0.15	49
1	25	8.9	225	13.8	352	4.3	108	14.2	361	18	8.8	0.89	294	0.24	77
1-1/4	32	8.9	225	14.6	372	4.6	117	15	381	20.3	9.2	1.45	482	0.39	127
1-1/2	40	8.9	225	14.8	376	5.0	127	15.2	386	22	10	2.27	753	0.60	199
2	50	8.9	225	15.3	389	6.0	152	15.7	398	26	11.7	3.54	1178	0.94	311
2-1/2	65	11.0	280	16.5	420	7.0	178	16.9	429	35	15.7	5.98	1990	1.58	525
3	80	11.0	280	16.7	426	7.5	191	17.2	435	38	17.1	9.05	3015	2.39	796
4	100	11.0	280	17.8	452	9.0	229	18.2	461	49	22.1	14.2	4712	3.74	1244
5	125	15.8	400	19	484	10.0	264	19.4	493	60	27.1	22.1	7363	5.84	1943
6	150	15.8	400	20	510	11.0	279	20.4	519	71	32.1	31.9	10602	8.40	2799
8	200	15.8	400	21.9	558	13.5	343	22.9	583	96	43.1	56.6	18849	15.0	4976
10	250	19.7	500	26.2	677	16.0	406	26.6	676	130	59.1	88.4	29452	23.4	7775
12	300	19.7	500	28.3	720	19.0	483	28.7	729	219	99.3	127.3	42411	33.6	11196
14	350	19.7	500	30.2	768	21.0	533	30.7	779	287	130.2	173.2	57726	45.8	15239
16	400	23.6	590	33.1	842	23.5	597	33.5	851	354	160.9	226.2	75398	59.8	19905
18	450	23.6	590	34.4	876	25.0	635	34.9	885	409	185.3	286.3	95425	75.6	25192
20	500	23.6	590	337.6	955	27.5	699	38	964	502	228.3	353.5	117809	93.4	31101
22	550	23.6	590	39	991	29.5	749	39.4	1000	532	241.3	427.7	142549	112.9	37633
24	600	23.6	590	41.6	1057	32.0	813	42	1066	561	255.3	509.0	169645	134.4	44786

PART NUMBER CONSTRUCTION

If you are interested in a product configuration that is not designated for your region, please contact Badger Meter.

Detector and Amplifier Ordering Information for North America

Hard Rubber Liner

M5 - - - - - - -

M5000	Meter Type	Detector: HARD RUBBER C-Steel 150# flanges	Detector: HARD RUBBER C-Steel 300# flanges	Detector: HARD RUBBER Stainless Steel 150# flanges
Meter Type- Standard LL		**R1**	**R2**	**R4**
1/2 in.	005	N/A	N/A	N/A
3/4 in.	007	N/A	N/A	N/A
1 in.	010	—	—	—
1-1/4 in.	012	—	—	—
1-1/2 in.	015	—	—	—
2 in.	020	—	—	—
2-1/2 in.	025	—	—	—
3 in.	030	—	—	—
4 in.	040	—	—	—
5 in.	050	—	—	—
6 in.	060	—	—	—
8 in.	080	—	—	—
10 in.	100	—	—	—
12 in.	120	—	—	—
14 in.	140	—	—	—
16 in.	160	—	—	—
18 in.	180	—	—	—
20 in.	200	—	—	—
22 in.	220	—	—	—
24 in.	240	—	—	—
36 in.	360	—	—	N/A

Electrodes & Grounding	
Electrodes & Grounding	
Alloy C with 316 Stainless Steel Grounding Rings	A
Stainless Steel with 316 Stainless Steel Grounding Rings	S
Alloy C Electrode and Grounding Electrode	C
Stainless Steel Electrode and Grounding Electrode	D

Amplifier	
Amplifier Type	
Battery Powered; Meter Mounted	H
Battery Powered; Remote Mounted	J
Battery Powered; Remote Mounted; Submersible	K
Battery Powered; Remote Mounted; Submersible (IP68)	L

Remote Cable Length	
Remote Cable Length	
None	WW
5 ft. Standard Cable	AA
10 ft. Standard Cable	AB
15 ft. Standard Cable	AC
30 ft. Standard Cable	AF
50 ft. Standard Cable	AK
75 ft. Standard Cable	AR
100 ft. Standard Cable	BW

Communications/ Outputs	
Communications/Outputs	
Standard Output	S
Standard Output with MODBUS 485 RTU	M

Wiring Method	
Wiring Method	
None	XX
Twist Tight - 5 ft. (MTR, ASSY)	TF
Twist Tight - 10 ft. (MTR, ASSY)	TH
Twist Tight - 25 ft. (MTR, ASSY)	TJ
Twist Tight - 75 ft. (MTR, ASSY)	TK
Nicor - 6 ft. (MTR, ASSY)	NG
Nicor - 25 ft. (MTR, ASSY)	NJ
Itron - 5 ft. (MTR, ASSY)	CF
Itron - 25 ft. (MTR, ASSY)	CJ

Unit of Measure Totalizer/ Flow Rate	
Unit of Measure Totalizer/ Flow Rate	
Gallons/gallons per minute	G
Gallons/cubic feet per minute	B
Gallons/cubic meters per second	D
Cubic Meters/gallons per minute	C
Cubic Meters/cubic meters per second	E
Cubic Meters/cubic meters per minute	T
Cubic Meters/cubic meters per hour	H
Cubic Feet/gallons per minute	F
Cubic Feet/cubic feet per minute	J
Cubic Feet/cubic meters per hour	K
Liters/gallons per minute	L
Liters/liters per second	N
Liters/liters per minute	P
Liters/liters per hour	Q
Million Gallons/gallons per minute	M
Gallons/millions gallons per day	R
Acre Feet/gallons per minute	A
Second-Foot Day/cubic feet per second	S
Custom Units	Z

Testing & Tagging	
Testing & Tagging	
Factory Calibrated	F
3rd Party Calibrated	3
Factory Calibrated/Stainless Steel Tag	S
3rd Party Calibrated w/ Stainless Steel Tag	T
State of Kansas Certified	K

PTFE Liner

M5	-		-		-		-		-		-		-		

M5000	Meter Type	Detector			Electrodes & Grounding	Amplifier	Remote cable	Communications/ Outputs	Wiring Method	Unit of Measure Totalizer/Flow Rate	Testing & Tagging
		PTFE C-Steel 150# flanges	PTFE C-Steel 300# flanges	PTFE Stainless Steel 150# flanges							
Meter Type- Standard LL		**P1**	**P2**	**P4**							
1/2 in.	005	—	—	—							
3/4 in.	007	—	—	—							
1 in.	010	—	—	—							
1-1/4 in.	012	—	—	—							
1-1/2 in.	015	—	—	—							
2 in.	020	—	—	—							
2-1/2 in.	025	—	—	—							
3 in.	030	—	—	—							
4 in.	040	—	—	—							
5 in.	050	—	—	—							
6 in.	060	—	—	—							
8 in.	080	—	—	—							
10 in.	100	—	—	—							
12 in.	120	—	—	—							
14 in.	140	—	—	—							
16 in.	160	—	—	—							
18 in.	180	—	—	—							
20 in.	200	—	—	—							
22 in.	220	—	—	—							
24 in.	240	—	—	—							
	Electrodes & Grounding										
	Alloy C with 316 Stainless Steel Grounding Rings				A						
	Stainless Steel with 316 Stainless Steel Grounding Rings				S						
	Alloy C Electrode and Grounding Electrode				C						
	Stainless Steel Electrode and Grounding Electrode				D						
	Amplifier Type										
	Battery Powered; Meter Mounted					H					
	Battery Powered; Remote Mounted					J					
	Battery Powered; Remote Mounted; Submersible					K					
	Battery Powered; Remote Mounted; Submersible (IP68)					L					
	Remote Cable Length										
	None						WW				
	5 ft. Standard Cable						AA				
	10 ft. Standard Cable						AB				
	15 ft. Standard Cable						AC				
	30 ft. Standard Cable						AF				
	50 ft. Standard Cable						AK				
	75 ft. Standard Cable						AR				
	100 ft. Standard Cable						BW				
	Communications/Outputs										
	Standard Output							S			
	Standard Output with MODBUS 485 RTU							M			
	Wiring Method										
	None								XX		
	Twist Tight - 5 ft. (MTR, ASSY)								TF		
	Twist Tight - 10 ft. (MTR, ASSY)								TH		
	Twist Tight - 25 ft. (MTR, ASSY)								TJ		
	Twist Tight - 75 ft. (MTR, ASSY)								TK		
	Nicor - 6 ft. (MTR, ASSY)								NG		
	Nicor - 25 ft. (MTR, ASSY)								NJ		
	Itron - 5 ft. (MTR, ASSY)								CF		
	Itron - 25 ft. (MTR, ASSY)								CJ		
	Unit of Measure Totalizer/ Flow Rate										
	Gallons/gallons per minute									G	
	Gallons/cubic feet per minute									B	
	Gallons/cubic meters per second									D	
	Cubic Meters/gallons per minute									C	
	Cubic Meters/cubic meters per second									E	
	Cubic Meters/cubic meters per minute									T	
	Cubic Meters/cubic meters per hour									H	
	Cubic Feet/gallons per minute									F	
	Cubic Feet/cubic feet per minute									J	
	Cubic Feet/cubic meters per hour									K	
	Liters/gallons per minute									L	
	Liters/liters per second									N	
	Liters/liters per minute									P	
	Liters/liters per hour									Q	
	Million Gallons/gallons per minute									M	
	Gallons/millions gallons per day									R	
	Acre Feet/gallons per minute									A	
	Second-Foot Day/cubic feet per second									S	
	Custom Units									Z	
	Testing & Tagging										
	Factory Calibrated										F
	3rd Party Calibrated										3
	Factory Calibrated/Stainless Steel Tag										S
	3rd Party Calibrated w/ Stainless Steel Tag										T
	State of Kansas Certified										K

INTENTIONAL BLANK PAGE

INTENTIONAL BLANK PAGE

Control. Manage. Optimize.

ModMAG and M-Series are registered trademarks of Badger Meter, Inc. Other trademarks appearing in this document are the property of their respective entities. Due to continuous research, product improvements and enhancements, Badger Meter reserves the right to change product or system specifications without notice, except to the extent an outstanding contractual obligation exists. © 2020 Badger Meter, Inc. All rights reserved.

www.badgermeter.com

Legacy Document Numbers: ITB-193-02 and ITB-187-01