VORTEX
www.teledyne-hi.com

TELEDYNE HASTINGS INSTRUMENTS
Everywhereyoulook™

Flow Meters and Flow Controllers

HFM-200 Flow Meter
HFC-202 Flow Controller

GENERAL PURPOSE FLOW METERS AND FLOW CONTROLLERS

FEATURES

- ±1% of Full-Scale Accuracy[1]
- Input Power +/- 15 VDC or +24 VDC (specify when ordering)
- Available Flow Ranges: 0 - 10 sccm up to 0 - 25 slm (N2 Equivalent)
- NIST Traceable Calibration

APPLICATIONS

- Gas Blending
- Environmental Monitoring
- Thin Film Deposition
- Leak Testing
- Medical Research
- Chromatography
- R&D

BENEFITS

- Excellent Stability
- Proven Reliability
- Outstanding Zero Stability

DESCRIPTION

The Teledyne Hastings Instruments (THI) Model HFM Mass Flowmeter and HFC Mass Flow Controller represent over 65 years of experience in designing and manufacturing reliable, high quality flow instruments.

The HFM/HFC Series of flow instruments is based on a modular design. At the heart of each instrument is an insulated thermal transfer sensor which provides enhanced zero stability.

The instrument's inherent linear response to flow changes and THI's long-proven reputation for quality, result in the finest flow meters and flow controllers available today.

Instruments are normally calibrated with the appropriate standard calibration gas (nitrogen), then a gas conversion factor is used to adjust the output the intended gas. Special calibration for other gases, such as oxygen, helium and argon, are available upon special request.

TELEDYNE
HASTINGS INSTRUMENTS
A Teledyne Technologies Company

Specifications and Standards

Options:

Fittings –

- VCR®,
- VCO®,
- Swagelok®,

Seals -

- Kalrez®
- Neoprene
- Buna-N

Output -

- 0-5 VDC
- 4-20 mA

Cleaned for Oxygen service

EMC

EN 61326-1

Accessories

Power Supplies available with:

- Integral Flow Totalizer
- Alarm Set Points
- Interconnecting cables

THCD-100 Power Supply & Display

COMMON SPECIFICATIONS HFM-200/HFC-202

Accuracy [1]	± 1.0% of F.S.
Repeatability	± 0.05% of F.S.
Standard Operating Pressure **High Pressure Option**	500 psi 1000 psi
Pressure Coefficient	+0.0067% /psi
Leak Integrity	< $1x10^{-9}$ sccs He
Operating Temperature	-10°C - 65°C
Temperature Coefficients	Zero ± 0.035%C of F.S. (0-60°C) Span ± 0.05%C of Rdg (0-60°C)
Standard Output **Optional Outputs**	0 - 5 VDC 4 - 20 mA
Connector (±15 VDC) **Connector (+24 VDC)**	15-pin subminiature D 9-pin subminiature D

SPECIFICATIONS HFM-200

Power Requirements (±15 VDC) **Power Requirements (+24 VDC)**	± (14-16) VDC @ ±30mA (< 1 Watt) (14-32) VDC (< 1.9 Watt)
Wetted Materials [2]	316 SS, Viton®, 82/18 Au/Ni Braze, Trace Ag solder
Weight (approx.)	1.45 lb (0.66 kg)

SPECIFICATIONS HFC-202

Power Requirements (±15 VDC) **Power Requirements (+24 VDC)**	± (14-16) VDC @ +60mA/-185 mA (< 3 Watt) (14-32) VDC (< 4.2 Watt)
Wetted Materials [2]	302 SS, 316 SS, Nickel, Viton®, 82/18 Au/Ni Braze, Trace Ag solder, Kalrez® (Valve Seat)
Setpoint Input	0-5 VDC (Std) /4-20mA (optional)
Weight (approx.)	1.65 lb (0.75 kg)

Hastings Instruments reserves the right to change or modify the design of its equipment without any obligation to provide notification of change or intent to change.

Viton® is a registered trademark of DuPont Performance Elastomers
Kalrez® is a registered trademark of DuPont Dow Elastomers
VCR® is a registered trademark of Swagelok Company.

[1] See Product Manual for critical information on instrument accuracy and the use of GCFs (gas conversion factors). Stated accuracy is for nitrogen or other gas specific calibration and use with this gas only.

[2] See Selection Chart for optional materials. Viton is standard O-ring.

Outline Drawings

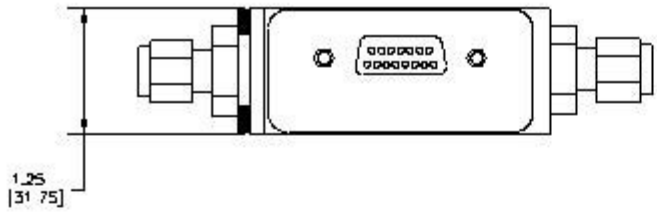

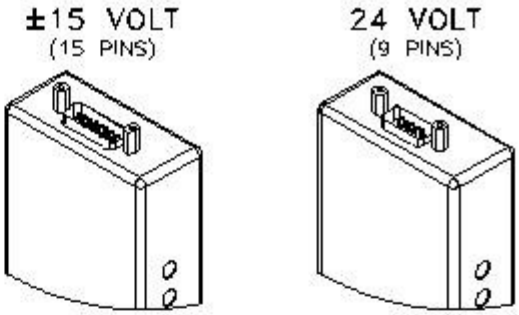

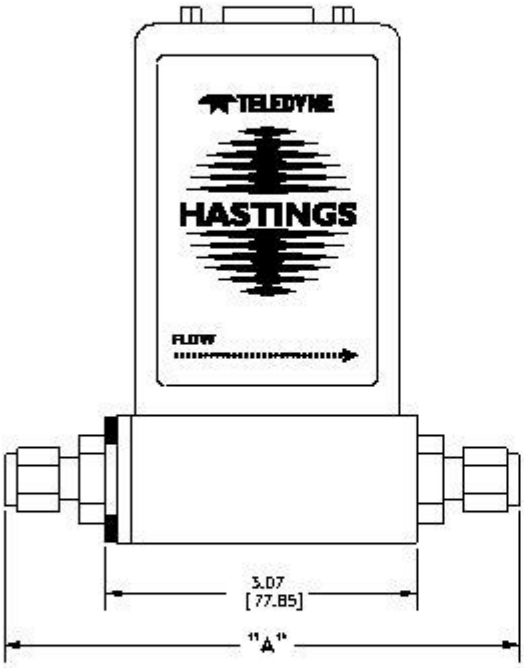

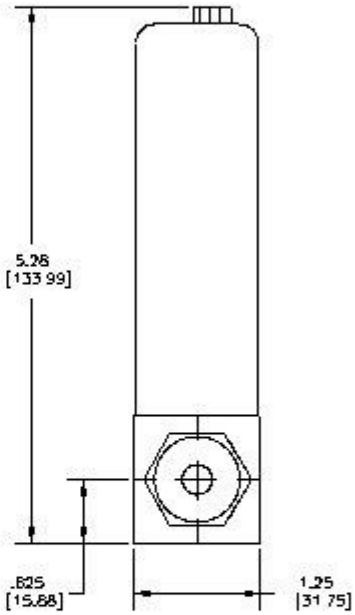

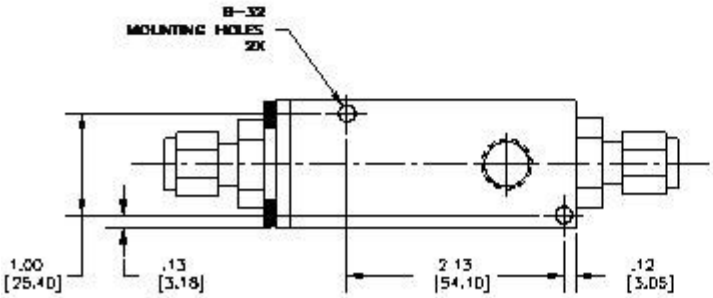

FITTING TYPE	DIM "A"
9/16" – 18 FEMALE	3.00 [76.20]
SWAG 1/8" W NUT	4.84 [122.94]
SWAG. 1/4" W NUT	5.02 [127.51]
SWAG. 3/8" W NUT	5.14 [130.56]
SWAG 1/8" BARE	4.32 [109.73]
SWAG. 1/4" BARE	4.44 [112.78]
SWAG. 3/8" BARE	4.56 [115.82]
SWAG 1/4" x 9/16-18 CLAND ELBOW	5.41 [137.41]
SWAG 6MM x 9/16-18	5.11 [129.79]
VCR FACE 1/4"	4.88 [123.95]
VCO FACE 1/4"	4.90 [124.46]

Selection Chart

Model No.	Circuit Board	Output	Fittings	O-Rings	Working Pressure	Cal
HFM-200						
HFC-202						

Options

Circuit Board	
01	Standard (±15 VDC)
03	24 VDC Supply

Output	
01	0-5 Volts (Std)
02	4-20 mA ** (Output Only)
03	4-20 mA I/O

Fittings	
01	1/4" Swagelok (Std)
02	1/8" Swagelok
03	1/4" VCR®
04	1/4" VCO®
05	1/4" Elbow
06	No fittings 9/16-18 Fem.
07	6mm Swagelok
08	3/8" Swagelok

O-Rings	
01	Viton® (Std)
02	Kalrez®
03	Neoprene
04	Buna-N

Working Pressure	
01	500 psig (Std)
02	1000 psig

Calibration	
01	NIST 5 point (Std)
02	NIST 10 Point
03	NIST 20 Point
04	Curve Fit

** 0-5 VDC Input

Range Information

Range _____

Flow Units _____

Gas _____

Upstream Pressure (min/max) ____

Downsream Pressure (min/max) ____

Is downstream pressure dependent on flow resistance? Y/N _____

STP _____ **°C & 760 Torr**

Standard Temperature (OC) and pressure (760 Torr) assumed unless otherwise specified

TELEDYNE
HASTINGS INSTRUMENTS
A Teledyne Technologies Company

Telephone: (757) 723-6531
Toll Free: (800) 950-2468
Fax: (757) 723-3925
World Wide Web: http://www.teledyne-hi.com
E-mail: hastings_instruments@teledyne.com
804 Newcombe Ave.
Hampton, VA 23669

ISO 9001 CERTIFIED

PB-140A_12/16 © Teledyne 2016 All Rights Reserved.