Electromagnetic amplifier type ModMAG® M3000 & M4000

For all detectors

DESCRIPTION

The amplifier with modular design allows flow measurements in ex-zones 1 and 2, in either the mounted or remote version. The amplifier housing, made of powder-coated aluminium, is available in protection class IP67 and with a separate connection space. Programming can be done either with closed housing thanks to a magnetic pen or with open housing via three buttons. The four-line display shows all necessary data like actual flow, totalizer and status messages. The programmable excitation frequency even enables the amplifier to be adjusted for difficult metering applications. The new developed process for amplifier compensation enables a high accuracy, especially in the lower flow range.

MEASURING PRINCIPLE

The operating principle of the electromagnetic flow meter is based on Faraday's law of magnetic induction: The voltage induced across any conductor, as it moves at right angles through a magnetic field, is proportional to the velocity of that conductor. The voltage induced within the fluid is measured by two diametrically opposed internally mounted electrodes. The induced signal voltage is proportional to the product of the magnetic flux density, the distance between the electrodes and the average flow velocity of the fluid.

FEATURES

- FM/CSA/ATEX model
- Protection class IP67
- Accuracy ±0,20%
- Flow range 0,03 – 12 m/s

APPLICATIONS

The ModMAG® is especially suited for flow measurements in the chemical and pharmaceutical industry, as well as water and waste water plants with explosion-proof zones.

DIMENSIONS

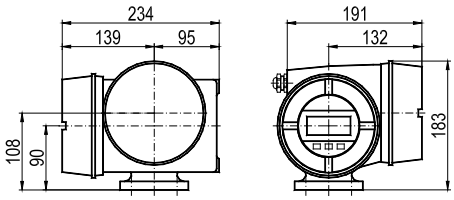

M3000/M4000

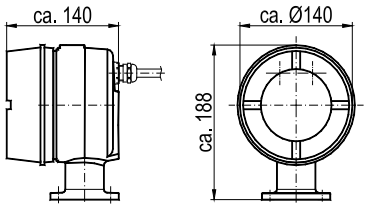

Junction box

Badger Meter

Product Data Sheet

TECHNICAL DATA

Power supply	85 – 240 VAC, 45 – 65 Hz < 20 VA, optional 24 VDC
Accuracy	±0,20 % of m.v. ±1 mm/s
Repeatability	<0,1 % of full scale
Flow range	0.03 – 12 m/s
Conductivity	min. 5 µS/cm (20 µS/cm for demineralized water)
Flow direction	bi-directional
Display	LCD, 4 lines / 16 characters, backlit, actual flow, 3 totalizers, status display
Programming	3 buttons or via magnetic pen
Interface	RS232 for measuring values and programming
Analog output	0/4- 20 mA ≤750 ohms, flow direction is displayed upon a separate status output
Pulse output	active / passive selectable, 2 open collectors and 2 solid state relays
	Open collector: active 18 VDC, 25 mA, passive 24 VDC, 20 mA (max. 0,5 W)
Frequency output	max. 10 kHz (open collector)
Status output	min./max. alarm, preselection, flow direction, error message, free configurable
Empty pipe detection	separate electrode
Low flow cut off	0-10 %
Housing	Powder coated aluminum die cast
Protection class	IP67
Cable insertion	3 x M 20
Ambient temperature	-20 °C up to +60 °C
Ex proof version	FM/CSA class I, div. 1 / div. 2, ATEX zone 1 and 2

DETECTOR TYPE III

Wafer connection

Wall mounted

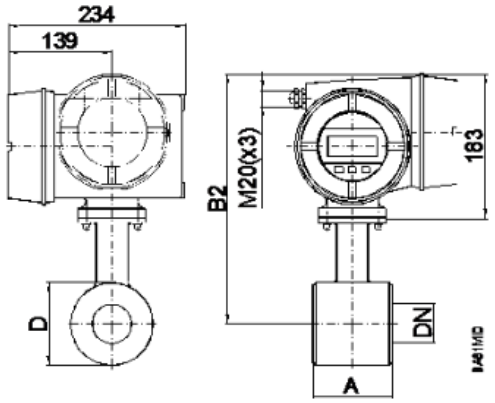

Remote version

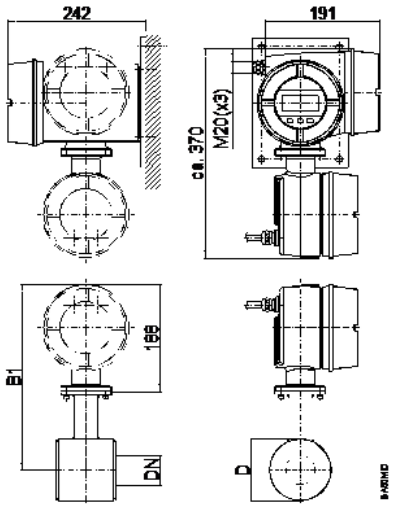

Thanks to its very short lay length, the detector type III is often the right alternative to a lot of applications. Delivered with a PTFE liner, the detector type III has a standard nominal pressure of PN 40.

TECHNICAL DATA

Size	DN 25 – DN 100 (1" … 4")	
Process connections	Wafer connection (in-between flange mounting)	
Nominal pressure	PN 40	
Protection class	IP65, optional IP68	
Min. conductivity	5 µS/cm (20 µS/cm for demineralized water)	
Liner materials	PTFE	-40 up to +150°C
Electrodes materials	Hastelloy C (Standard) Tantal Platinum / Gold plated Platinum / Rhodium	
Housing	Carbon steel / optional stainless steel	
Lay length	DN 25 – 50	100 mm
	DN 65 – 100	150 mm

DIMENSIONS (MM)

			M3000		M4000		
DN		**A**	**B1**	**B2**	**B1**	**B2**	**D**
25	1"	100	306	301	330	325	74
32	1 ½"	100	311	306	335	330	84
40	1 ½"	100	316	311	340	335	94
50	2"	100	321	316	345	340	104
65	2 ½"	150	334	329	358	353	129
80	3"	150	339	334	363	358	140
100	4"	150	347	342	371	366	156
Pressure level PN 40							

DETECTOR TYP V

Flange process connection

Wall mounted

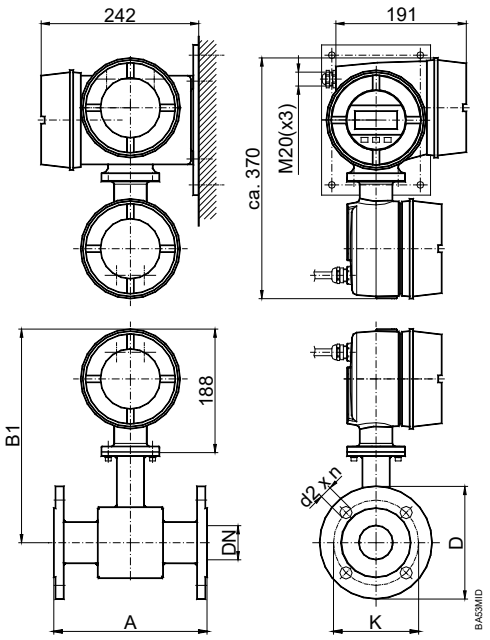

Remote version

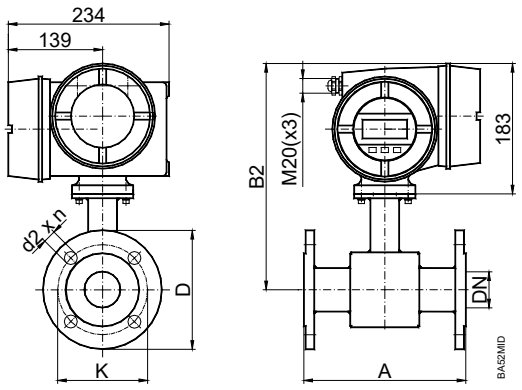

The electromagnetic detector type V is not only available in a number of different flange process connections (DIN, ANSI, JIS, AWWA, etc.) but also in a number of liners like hard rubber, soft rubber, PTFE, PFA or Halar. Available in sizes from DN 6 to DN 600 and nominal pressures up to PN 100, the detector type V is best suited for a variety of applications in the industry and the water/waste water industry.

Lined measuring pipes with materials approved for drinking water: KTW/DVGW, NSF-61, WRAS, ACS.

TECHNICAL DATA

Size	M3000: DN 6 – DN 600 (1/4" …56") M4000: DN 6 – DN 300 (1/4" …12")		
Process connections	Flange: DIN, ANSI, JIS, AWWA, etc.		
Nominal pressure	up to PN 100		
Protection class	IP65, optional IP68		
Min. conductivity	5 µS/cm (20 µS/cm for demineralized water)		
Liner materials	Hard/soft rubber	from DN 25	0 up to +80°C
	PFA	DN 6 – DB 10	-40 up to +150 °C
	PTFE	DN 15 – DN 600	-40 up to +150 °C
	Halar (ECTFE)	from DN 300	-40 up to +15 0°C
Electrodes-materials	Hastelloy C (Standard), Tantal, Platinum / Gold plated, Platinum / Rhodium		
Housing	Carbon steel / optional stainless steel		
Lay length	DN 6 – DN 20	170 mm	
	DN 25 – DN 50	225 mm	
	DN 65 – DN 100	280 mm	
	DN 125 – DN 200	400 mm	
	DN 250 – DN 350	500 mm	
	DN 400 –DN 600	600 mm	

DIMENSIONS (MM)

DN		A Std*	A ISO**	M3000		M4000		With ANSI flange			With DIN flange		
				B1	B2	B1	B2	∅ D	∅ K	∅ d2xn	∅ D	∅ K	∅ d2xn
6	1/2″	170	---	296	291	320	315	88,9	60,3	15,9 x 4	90	60	14 x 4
8	5/16″	170	---	296	291	320	315	88,9	60,3	15,9 x 4	90	60	14 x 4
10	3/8″	170	---	296	291	320	315	88,9	60,3	15,9 x 4	90	60	14 x 4
15	1/2″	170	200	306	301	330	325	88,9	60,3	15,9 x 4	95	65	14 x 4
20	1 1/2″	170	200	306	301	330	325	98,4	69,8	15,9 x 4	105	75	14 x 4
25	1″	225	200	306	301	330	325	107,9	79,4	15,9 x 4	115	85	14 x 4
32	1 1/2″	225	200	321	316	345	340	117,5	88,9	15,9 x 4	140	100	18 x 4
40	1 1/2″	225	200	321	316	345	340	127	98,4	15,9 x 4	150	110	18 x 4
50	2″	225	200	321	316	345	340	152,4	120,6	19 x 4	165	125	18 x 4
65	2 1/2″	280	200	339	334	363	358	177,8	139,7	19 x 4	185	145	18 x 4
80	3″	280	200	339	334	363	358	190,5	152,4	19 x 4	200	160	18 x 8
100	4″	280	250	346	341	370	365	228,6	190,5	19 x 8	220	180	18 x 8
125	5″	400	250	366	361	390	385	254	215,9	22,2 x 8	250	210	18 x 8
150	6″	400	300	378	373	402	397	279,4	241,3	22,2 x 8	285	240	22 x 8
200	8″	400	350	406	401	430	425	342,9	298,4	22,2 x 8	340	295	22 x 12
250	10″	500	450	430	425	454	449	406,4	361,9	25,4 x 12	395	350	22 x 12
300	12″	500	500	493	488	517	512	482,6	431,8	25,4 x 12	445	400	22 x 12
350	14″	500	550	518	513	---	---	533,4	476,2	28,6 x 12	505	460	22 x 16
400	16″	600	600	543	538	---	---	596,9	539,7	28,6 x 16	565	515	26 x 16
450	18″	600	---	568	563	---	---	635,0	577,8	31,7 x 16	---	---	---
500	20″	600	---	593	588	---	---	698,5	635,0	31,7 x 20	670	620	26 x 20
550	22″	600	---	618	613	---	---	749,3	692,1	34,9 x 20	---	---	---
600	24″	600	---	656	651	---	--	812,8	749,3	34,9 x 20	780	725	30 x 20

Standard		
With ANSI flange	DN 6 - DN 600	150 lbs
With DIN flange	DN 6 –DN 200	PN 16
	DN 250 – DN 600	PN 10
* Standard **ISO 13359		

SANITARY DETECTOR FOR FOOD

Process connections Tri-Clamp®, DIN 11851, ISO 2852, ...

Tri-Clamp®, wall mounted

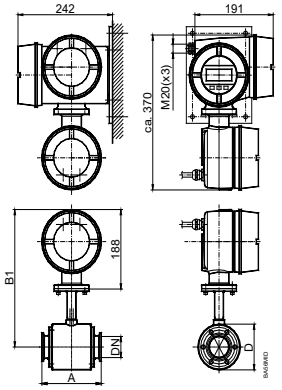

Tri-Clamp®, remote version

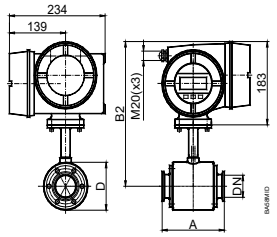

DIN 11851, wall mounted

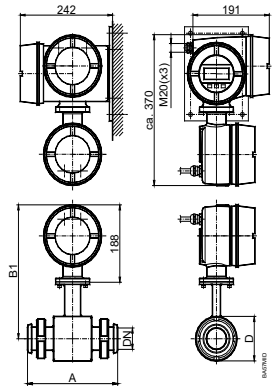

DIN 11851, remote version

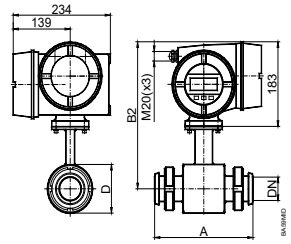

The sanitary detector was developed for the flow measurement of liquid food. This model is available with Tri-Clamp®, DIN 11851, ISO 2852 process connections and also with any special connections (customer specifications), The sanitary detector is delivered in a stainless steel housing and with PTFE lining.

TECHNICAL DATA

Size	DN 10 - DN 100 (3/8" … 4")		
Process connections	Tri-Clamp®, DIN 11851, ISO 2852, etc.		
Nominal pressure	PN 10		
Protection class	IP65, optional IP68		
Min. conductivity	5 µS/cm (20 µS/cm for demineralized water)		
Liner materials	PTFE	PTFE	
Electrodes materials	Hastelloy C (Standard) Tantal Platinum / Gold plated Platinum / Rhodium		
Housing	Carbon steel / optional stainless steel		
Lay length	Tri-Clamp® connection	DN 10 – 50	145 mm
		DN 65 – 100	200 mm
	DIN 11851 connection	DN 10 – 20	170 mm
		DN 25 – 50	225 mm
		DN 65 – 100	280 mm

DIMENSIONS (MM) TYPE FOOD TRI-CLAMP®

DN		A	B1	B2	D
10	3/8"	145	228	191	74
15	1/2"	145	228	191	74
20	3/4"	145	228	191	74
25	1"	145	228	191	74
40	1 ½"	145	238	201	94
50	2"	145	243	206	104
65	2 ½"	200	256	219	129
80	3"	200	261	224	140
100	4"	200	269	232	156
Pressure level PN 10					

DIMENSIONS (MM) TYPE FOOD DIN 11851

DN		A	M3000		M4000		D
			B1	B2	B1	B2	
10	3/8″	170	306	301	330	325	74
15	1/2″	170	306	301	330	325	74
20	1 ½″	170	306	301	330	325	74
25	1″	225	306	301	330	325	74
32	1 ½″	225	311	306	335	330	84
40	1 ½″	225	316	311	340	335	94
50	2″	225	321	316	345	340	104
65	2 ½″	280	334	329	358	353	129
80	3″	280	339	334	363	358	140
100	4″	280	347	342	371	366	156
Pressure level PN 10							