M-Series® M1000

Electromagnetic Flow Meter

DESCRIPTION

The ModMAG M-Series® M1000 Electromagnetic Flow Meter is the result of years of research and field use of electromagnetic flow meter technology. Designed, developed and manufactured under strict quality standards, the M1000 features sophisticated, processor-based signal conversion with accuracies of ± 0.3 percent.

The M1000 can be chosen for a broad spectrum of applications and the wide selection of liner and electrode materials provide maximum compatibility and minimum maintenance over a long operating period.

OPERATION

The operating principle of the electromagnetic flow meter is based on Faraday's law of magnetic induction: The voltage induced across any conductor, as it moves at right angles through a magnetic field, is proportional to the velocity of that conductor. The voltage induced within the fluid is measured by two diametrically opposed internally mounted electrodes. The induced signal voltage is proportional to the product of the magnetic flux density, the distance between the electrodes and the average flow velocity of the fluid.

ELECTRODES

When looking from the end of the meter into the inside bore, the two measuring electrodes are positioned at three o'clock and nine o'clock. As a conductive fluid flows through the magnetic field, a voltage is induced across the electrodes. This voltage is proportional to the average flow velocity of the fluid and is measured by the two electrodes. This induced voltage is then amplified and processed digitally by the converter to produce an accurate analog or digital signal. The signal can then be used to indicate flow rate and totalization or to communicate to remote sensors and controllers.

The M1000 Electromagnetic Flow Meter also has an "empty pipe" detection feature. This is accomplished with a third electrode positioned in the meter between twelve o'clock and one o'clock. If this electrode is not covered by fluid for a minimum of five-seconds, the meter will display an "empty pipe" condition. When the electrode again becomes covered with fluid, the error message will disappear and the meter will continue measuring.

DETECTOR

The flow meter is a stainless steel tube lined with a non-conducive material. Outside the tube, two DC powered electromagnetic coils are positioned opposing each other. Perpendicular to these coils, two electrodes are inserted into the flow tube. Energized coils create a magnetic field across the whole diameter of the pipe. With a no moving parts, open flow tube design there is no pressure lost and practically no maintenance required

APPLICATION

The M1000 Electromagnetic Flow Meter has been specifically designed for industrial water/wastewater, machinery plants, vehicles and batching process applications. Available in sizes 1/4…8 inch (6…200 DN) and nominal pressures up to 1450 psi (100 bar), the meter is best suited for bidirectional flow measurements of fluid > 5 µS/cm (> 20 µS/cm for demineralized water). The amplifier can be integrally mounted to the detector, or if necessary, mounted remotely. The amplifier is housed in a Type NEMA 4X (IP67) enclosure and the measuring pipes are lined with material approved for drinking water: KTW/DVGW, NSF-61, WRAS, ACS. Several process connections are available, including DIN flanges, dairy pipe connections and TriClamp®.

FEATURES

- Accuracy ± 0.3%
- Flow range 0.03…12 m/s
- Sizes 1/4 … 8 in. (6…200 DN)
- LCD display
- Power supply 92…275V AC, 9…36V DC
- RS-232, RS-485 and RS-422 with Modbus® RTU
- Integrated data logger

Badger Meter

MAG-DS-00251-EN-06 (March 2020)

Product Data Sheet

SPECIFICATIONS

NOTE: DN represents nominal diameter in mm.

Detector Type II Specifications

The Detector Type II is not only available in a number of different flange process connections (DIN, ANSI, JIS, AWWA) but also in a number of liners like hard rubber, soft rubber, PTFE, PFA or Halar. Available in sizes 1/4…20 inch (DN 6…500) and nominal pressures up to 1450 psi (100 bar), the Detector Type II is best suited for a variety of applications in the industry and the water/waste water industry.
Lined measuring pipes with materials approved for drinking water: KTW/DVGW, NSF-61, WRAS, ACS.

Size	1/4…20 in. (DN 6…500)		
Process Connections	Flange: DIN, ANSI, JIS, AWWA		
Nominal Pressure	Up to 1450 psi (100 bar) (PED)		
Protection Class	IP 67, IP 68 optional		
Minimum Conductivity	5 µS/cm(20 µS/cm demineralized water)		
Liners	Hard/soft rubber	1 in. (DN 25) and up	32…176° F (0…80° C)
	PFA	1/4…3/8 in. (DN 6…10)	–40…302° F (–40…150° C)
	PTFE	1/2…20 in. (DN 15…500)	–40…302° F (–40…150° C)
Electrodes	Hastelloy C (Standard) Tantalum	Platinum/Gold platinized Platinum/Rhodium	
Body	Steel/stainless steel optional		
Grounding Rings	Stainless steel		

Process Connection Flange Remote Version
in. (mm)

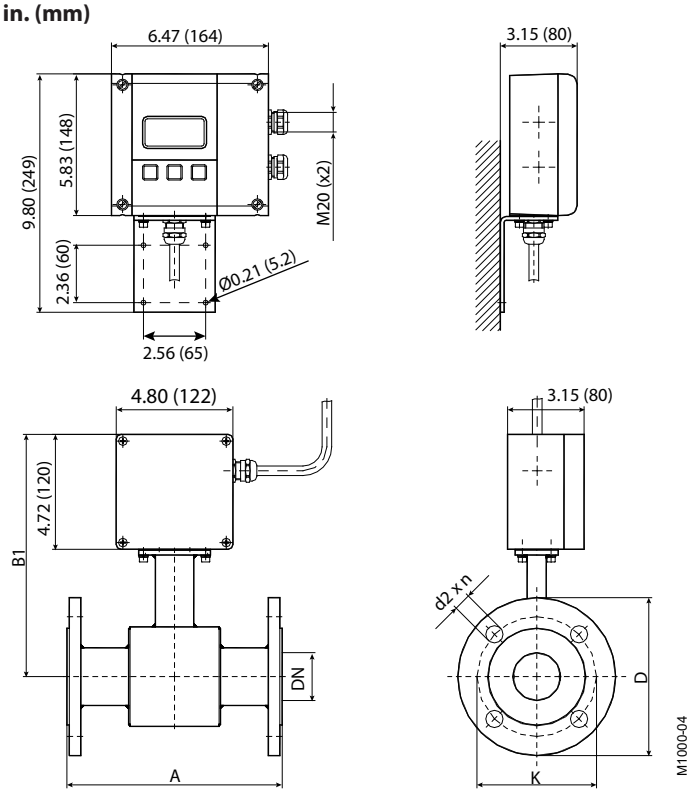

Process Connection Flange Mounted Version
in. (mm)

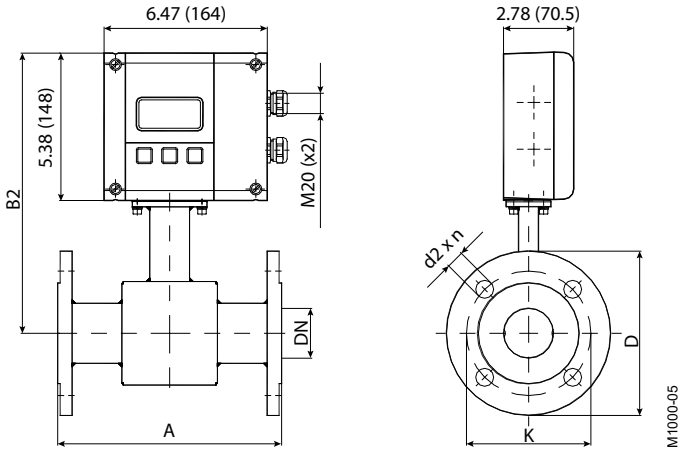

Size		A Std* in. (mm)	A ISO** in. (mm)	B1 in. (mm)	B2 in. (mm)	ANSI Flanges			DIN Flanges			Finish Est. Wt. lb (kg)
Inches	DN					D in. (mm)	K in. (mm)	d2×n in. (mm)	D in. (mm)	K in. (mm)	d2×n in. (mm)	
1/4 in.	6	6.69 (170)	—	8.98 (228)	10.08 (256)	3.50 (88.9)	2.37 (60.3)	0.63 × 0.16 (15.9 × 4)	3.54 (90)	2.37 (60)	0.55 × 0.16 (14 × 4)	9.04 (4.1)
5/16 in.	8	6.69 (170)	—	8.98 (228)	10.08 (256)	3.50 (88.9)	2.37 (60.3)	0.63 × 0.16 (15.9 × 4)	3.54 (90)	2.37 (60)	0.55 × 0.16 (14 × 4)	9.04 (4.1)
3/8 in.	10	6.69 (170)	—	8.98 (228)	10.08 (256)	3.50 (88.9)	2.37 (60.3)	0.63 × 0.16 (15.9 × 4)	3.54 (90)	2.37 (60)	0.55 × 0.16 (14 × 4)	9.04 (4.1)
1/2 in.	15	6.69 (170)	7.87 (200)	9.37 (238)	10.47 (266)	3.50 (88.9)	2.37 (60.3)	0.63 × 0.16 (15.9 × 4)	3.74 (95)	2.56 (65)	0.55 × 0.16 (14 × 4)	9.04 (4.1)
3/4 in.	20	6.69 (170)	7.87 (200)	9.37 (238)	10.47 (266)	3.87 (98.4)	2.75 (69.8)	0.63 × 0.16 (15.9 × 4)	4.13 (105)	2.95 (75)	0.55 × 0.16 (14 × 4)	11.24 (5.1)
1 in.	25	8.86 (225)	7.87 (200)	9.37 (238)	10.47 (266)	4.25 (107.9)	3.13 (79.4)	0.63 × 0.16 (15.9 × 4)	4.53 (115)	3.35 (85)	0.55 × 0.16 (14 × 4)	16.76 (7.6)
1-1/4 in.	32	8.86 (225)	7.87 (200)	9.96 (253)	11.06 (281)	4.63 (117.5)	3.50 (88.9)	0.63 × 0.16 (15.9 × 4)	5.51 (140)	3.94 (100)	0.71 × 0.16 (18 × 4)	18.96 (8.6)
1-1/2 in.	40	8.86 (225)	7.87 (200)	9.96 (253)	11.06 (281)	5.00 (127)	3.87 (98.4)	0.63 × 0.16 (15.9 × 4)	5.91 (150)	4.33 (110)	0.71 × 0.16 (18 × 4)	20.06 (9.1)
2 in.	50	8.86 (225)	7.87 (200)	9.96 (253)	11.06 (281)	6.00 (152.4)	4.75 (120.6)	0.75 × 0.16 (19 × 4)	6.50 (165)	4.92 (125)	0.71 × 0.16 (18 × 4)	24.47 (11.1)
2-1/2 in.	65	11.02 (280)	7.87 (200)	10.67 (271)	11.77 (299)	7.00 (177.8)	5.5 (139.7)	0.75 × 0.16 (19 × 4)	7.28 (185)	5.71 (145)	0.71 × 0.16 (18 × 4)	50.92 (23.1)
3 in.	80	11.02 (280)	7.87 (200)	10.67 (271)	11.77 (299)	7.50 (190.5)	6.00 (152.4)	0.75 × 0.16 (19 × 4)	7.87 (200)	6.30 (160)	0.71 × 0.31 (18 × 8)	53.13 (24.1)
4 in.	100	11.02 (280)	9.84 (250)	10.94 (278)	12.05 (306)	9.00 (228.6)	7.50 (190.5)	0.75 × 0.31 (19 × 8)	8.66 (220)	7.09 (180)	0.71 × 0.31 (18 × 8)	55.34 (25.1)
5 in.	125	15.75 (400)	9.84 (250)	11.73 (298)	12.83 (326)	10.00 (254)	8.50 (215.9)	0.87 × 0.31 (22.2 × 8)	9.84 (250)	8.27 (210)	0.71 × 0.31 (18 × 8)	56.44 (25.6)
6 in.	150	15.75 (400)	11.81 (300)	12.20 (310)	13.31 (338)	11.00 (279.4)	9.50 (241.3)	0.87 × 0.31 (22.2 × 8)	11.22 (285)	9.45 (240)	0.87 × 0.31 (22 × 8)	58.64 (26.6)
8 in.	200	15.75 (400)	13.78 (350)	13.31 (338)	14.41 (366)	13.5 (342.9)	11.75 (298.4)	0.87 × 0.31 (22.2 × 8)	13.39 (340)	11.61 (295)	0.87 × 0.47 (22 × 12)	85.10 (38.6)
10 in.	250	19.69 (500)	17.72 (450)	14.25 (362)	15.35 (390)	16.00 (406.4)	14.25 (361.9)	1.00 × 0.47 (25.4 × 12)	15.55 (395)	13.78 (350)	0.87 × 0.47 (22 × 12)	—
12 in.	300	19.69 (500)	19.69 (500)	16.73 (425)	17.83 (453)	19.00 (482.6)	17.00 (431.8)	1.00 × 0.47 (25.4 × 12)	17.52 (445)	15.75 (400)	0.87 × 0.47 (22 × 12)	—
14 in.	350	19.69 (500)	21.65 (550)	17.72 (450)	18.82 (478)	21.00 (533.4)	18.75 (476.2)	1.13 × 0.47 (28.6 × 12)	19.88 (505)	18.11 (460)	0.87 × 0.63 (22 × 16)	—
16 in.	400	23.62 (600)	23.62 (600)	18.70 (475)	19.80 (503)	23.5 (596.9)	21.25 (539.7)	1.13 × 0.63 (28.6 × 16)	22.24 (565)	20.28 (515)	1.02 × 0.63 (26 × 16)	—
18 in.	450	23.62 (600)	—	19.69 (500)	20.79 (528)	25.00 (635.0)	22.75 (577.8)	1.25 × 0.63 (31.7 × 16)	24.21 (615)	22.24 (565)	1.02 × 0.79 (26 × 20)	—
20 in.	500	23.62 (600)	—	20.67 (525)	21.42 (554)	27.50 (698.5)	25.00 (635.0)	1.25 × 0.63 (31.7 × 16)	26.38 (670)	24.41 (620)	1.02 × 0.79 (26 × 20)	—

Standard		
ANSI flanges	1/4…8 in. (DN 6…200)	Nominal Pressure 145 psi (10 bar)
DIN flanges	1/4…8 in. (DN 6…200)	Nominal Pressure 232 psi (16 bar)
	10…20 in. (DN 250…500)	Nominal Pressure 145 psi (10 bar)

* Standard
**ISO 13359

Detector Type Food Specifications

The sanitary detector was developed for the flow measurement of liquid food. This model is available with Tri-Clamp, DIN 11851, ISO2852 or BS4852 process connections or with any customer specified connections. The sanitary detector is delivered in a stainless steel housing and with PTFE lining.

Size	3/8…4 in. (DN 10…100)		
Process Connections	Tri-Clamp, DIN 11851, ISO2852, BS4825 and customer specified.		
Nominal Pressure	Tri-Clamp connection	145 psi (10 bar)	
	DIN 11851 connection	230 psi (16 bar)	
Protection Class	IP 67, IP 68 optional		
Minimum Conductivity	5 µS/cm(20 µS/cm demineralized water)		
Liners	PTFE	–40…302° F (–40…150° C)	
Electrodes	Hastelloy C (Standard)	Platinum/Gold Platinized	
	Tantalum	Platinum/Rhodium	
Body	Stainless steel		
Overall Length	Tri-Clamp connection	3/8…2 in. (DN 10…50)	5.71 in. (145 mm)
		2-1/2…4 in. (DN 65…100)	7.87 in. (200 mm)
	DIN 11851 connection	3/8…3/4 in. (DN 10…20)	6.69 in. (170 mm)
		1…2 in. (DN 25…50)	8.86 in. (225 mm)
		2-1/2…4 in. (DN 65…100)	11.02 in. (280 mm)

Process Connection Tri-Clamp Remote Version in. (mm)

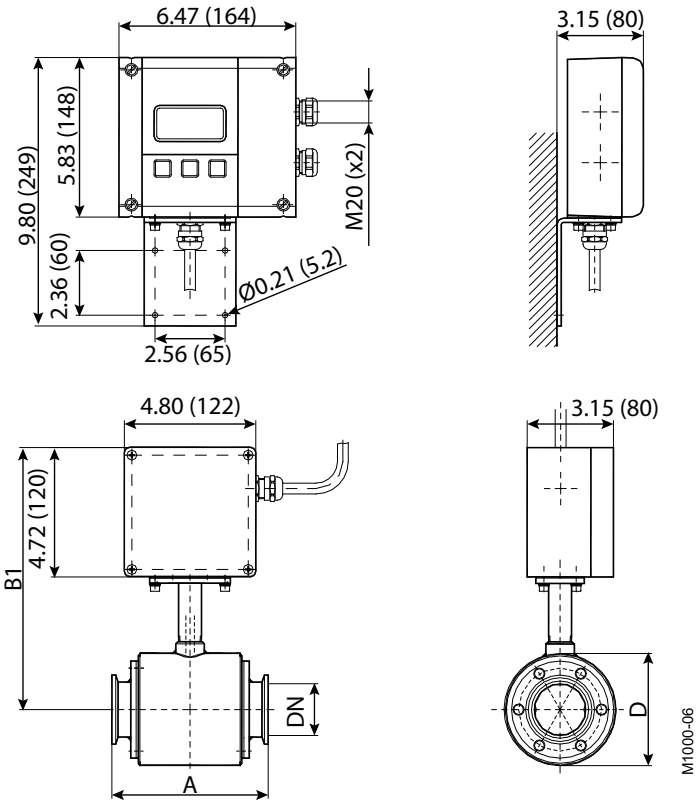

Process Connection DIN 11851 Remote Version in. (mm)

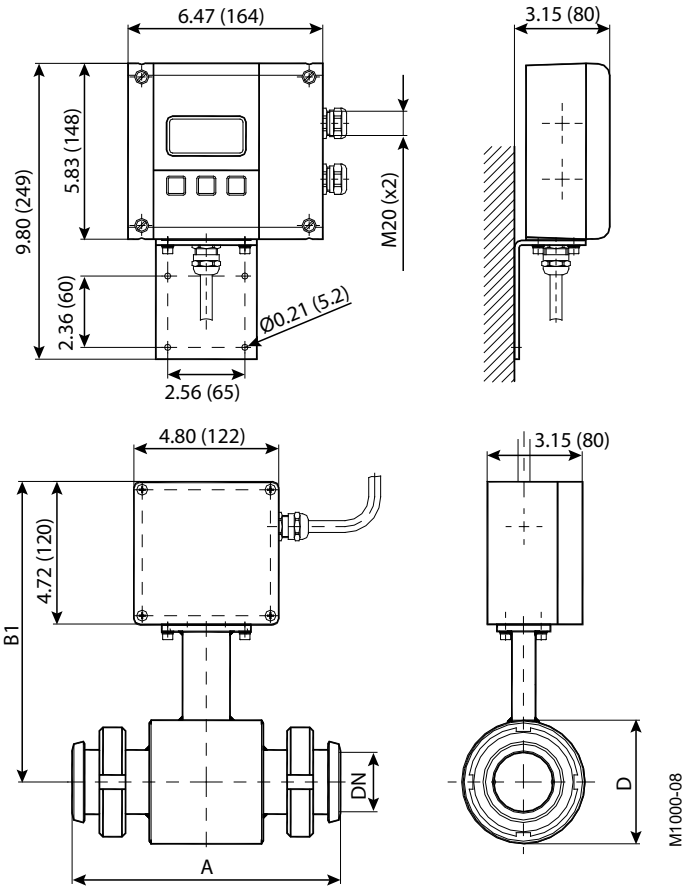

Process Connection Tri-Clamp Mounted Version
in. (mm)

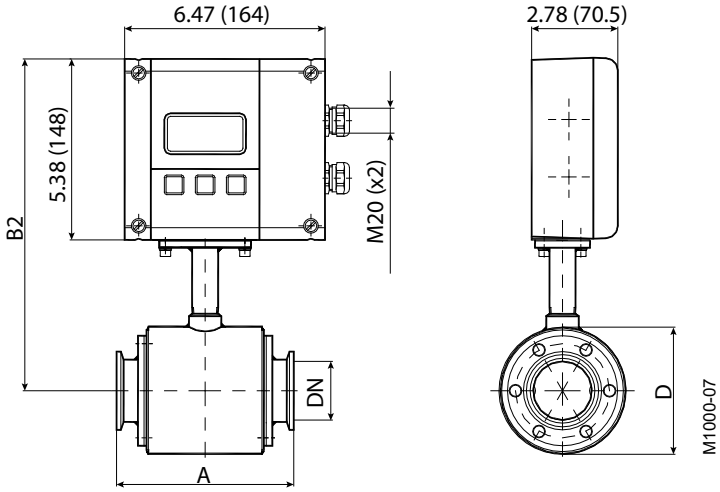

Process Connection DIN 11851 Mounted Version
in. (mm)

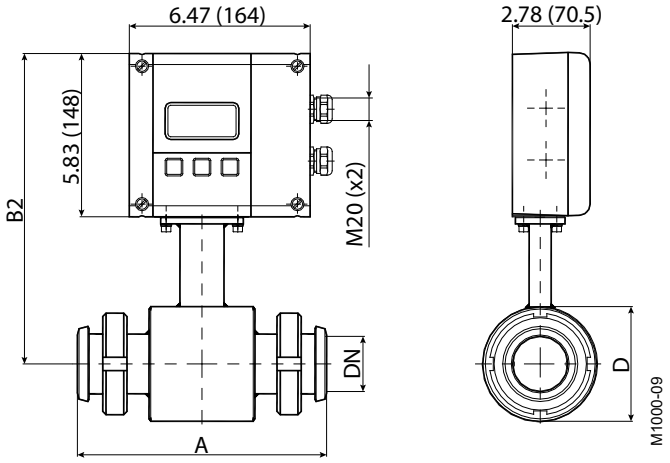

Type Food Tri-Clamp					
Size		A in. (mm)	B1 in. (mm)	B2 in. (mm)	D in. (mm)
Inches	DN				
3/8 in.	10	5.71 (145)	8.98 (228)	10.08 (256)	2.91 (74)
1/2 in.	15	5.71 (145)	8.98 (228)	10.08 (256)	2.91 (74)
3/4 in.	20	5.71 (145)	8.98 (228)	10.08 (256)	2.91 (74)
1 in.	25	5.71 (145)	8.98 (228)	10.08 (256)	2.91 (74)
1-1/2 in.	40	5.71 (145)	9.37 (238)	10.47 (266)	3.70 (94)
2 in.	50	5.71 (145)	9.57 (243)	10.67 (271)	4.09 (104)
2-1/2 in.	65	7.87 (200)	10.08 (256)	11.18 (284)	5.08 (129)
3 in.	80	7.87 (200)	10.28 (261)	11.38 (289)	5.51 (140)
4 in.	100	7.87 (200)	10.59 (269)	11.69 (297)	6.14 (156)
Nominal Pressure 145 psi (10 bar)					

Type Food DIN 11851					
Size		A in. (mm)	B1 in. (mm)	B2 in. (mm)	D in. (mm)
Inches	DN				
3/8 in.	10	6.69 (170)	9.37 (238)	10.47 (266)	2.91 (74)
1/2 in.	15	6.69 (170)	9.37 (238)	10.47 (266)	2.91 (74)
3/4 in.	20	6.69 (170)	9.37 (238)	10.47 (266)	2.91 (74)
1 in.	25	8.86 (225)	9.37 (238)	10.47 (266)	2.91 (74)
1-1/4 in.	32	8.86 (225)	9.57 (243)	10.67 (271)	3.31 (84)
1-1/2 in.	40	8.86 (225)	9.76 (248)	10.87 (276)	3.70 (94)
2 in.	50	8.86 (225)	9.96 (253)	11.06 (281)	4.09 (104)
2-1/2 in.	65	11.02 (280)	10.47 (266)	11.57 (294)	5.08 (129)
3 in.	80	11.02 (280)	10.67 (271)	11.77 (299)	5.51 (140)
4 in.	100	11.02 (280)	10.98 (279)	12.09 (307)	6.14 (156)
Nominal Pressure 232 psi (16 bar)					

Process Connection Tri-Clamp Standards BS4825/ISO2852

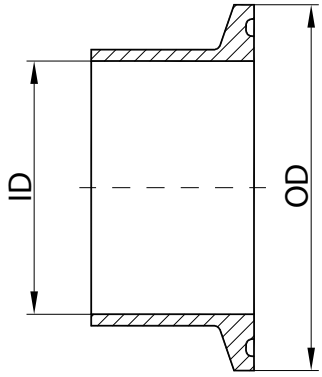

BS4825					ISO2852				
Size	OD		ID		Size	OD		ID	
in.	in.	mm	in.	mm	DN	in.	mm	in.	mm
—	—	—	—	—	10	1.99	50.5	0.55	14.0
1/2	0.98	25.0	0.37	9.4	15	1.99	50.5	0.71	18.1
3/4	0.98	25.0	0.62	15.75	20	1.99	50.5	0.90	22.9
1	1.99	50.5	0.87	22.1	25	1.99	50.5	1.13	28.7
1-1/2	1.99	50.5	1.37	34.8	32	2.52	64.0	1.51	38.4
2	2.52	64.0	1.87	47.5	40	2.52	64.0	1.74	44.3
2-1/2	3.05	77.5	2.37	60.2	50	3.05	77.5	2.22	56.3
3	3.58	91.0	2.87	72.9	65	3.58	91.0	2.84	72.1
3-1/2	4.17	106.0	3.32	84.3	80	4.17	106.0	3.32	84.3
4	4.69	119.0	3.83	97.4	100	5.12	130.0	4.32	109.7
Nominal Pressure 145 psi (10 bar)									

Detector Type III Specifications

Thanks to its very short lay length, the Detector Type III is often the right alternative. Delivered with a PTFE liner, the Detector Type III has a standard nominal pressure of 580 psi (40 bar).

Size	1…4 in. (DN 25…100)	
Process Connections	Wafer connection, (intermediate flange mounting)	
Nominal Pressure	580 psi (40 bar)	
Protective Class	IP 67, IP 68 optional	
Minimum Conductivity	5 µS/cm(20 µS/cm demineralized water)	
Liner	PTFE	–40…302° F (–40…150° C)
Electrodes	Hastelloy C (Standard) Tantalum	Platinum/Gold platinized Platinum/Rhodium
Body	Steel/stainless steel optional	
Grounding Rings	Stainless steel	
Overall Length	1…2 in. (DN 25…50)	3.94 in. (100 mm)
	2-1/2…4 in. (DN 65…100)	5.91 in. (150 mm)

Process Connection Wafer Remote Version in. (mm)

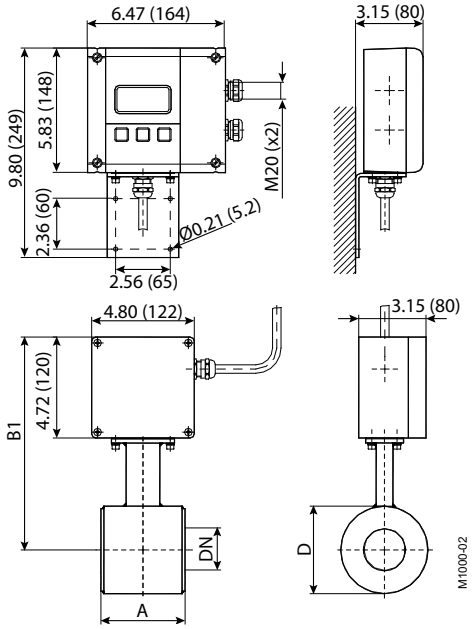

Process Connection Wafer Mounted Version in. (mm)

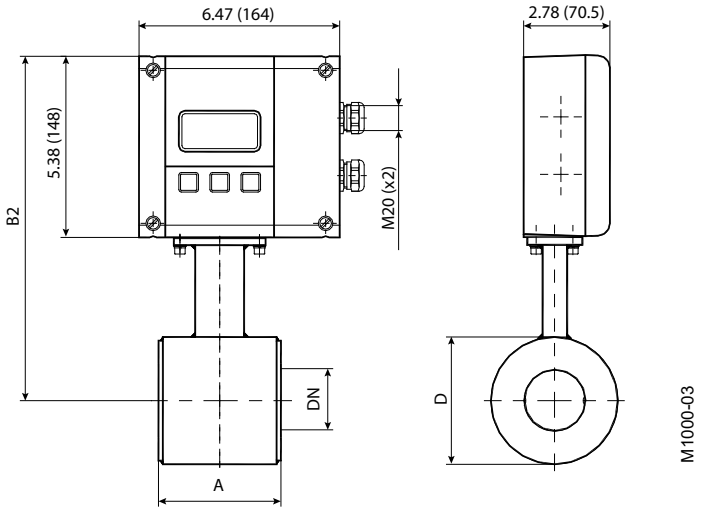

Size		A	B1	B2	D
Inches	**DN**	**in. (mm)**	**in. (mm)**	**in. (mm)**	**in. (mm)**
1 in.	25	3.94 (100)	9.37 (238)	10.47 (266)	2.91 (74)
1-1/4 in.	32	3.94 (100)	9.57 (243)	10.67 (271)	3.31 (84)
1-1/2 in.	40	3.94 (100)	9.76 (248)	10.87 (276)	3.70 (94)
2 in.	50	3.94 (100)	9.96 (253)	11.06 (281)	4.09 (104)
2-1/2 in.	65	5.91 (150)	10.47 (266)	11.57 (294)	5.08 (129)
3 in.	80	5.91 (150)	10.67 (271)	11.77 (299)	5.51 (140)
4 in.	100	5.91 (150)	10.98 (279)	12.09 (307)	6.14 (156)
Nominal Pressure 580 psi (40 bar)					

Amplifier Type ModMAG M1000 Specifications

Type	ModMAG M1000
Auxiliary Power	92…275V AC (50 / 60 Hz), 13VA optional 9…36V DC, 4 W
Analog Output	0/4…20 mA, ≤ 800 Ohm / 0…10 mA
	Flow direction is displayed via separate status output
Digital Outputs	2 open collectors, passive 32V DC, 0…100 Hz 100 mA, 100…10,000 Hz 20 mA, optional active Pulse, status, error messages
Digital Inputs	Totalizers and preselectors reset Positive Zero Return
Frequency Output	10 kHz
Empty Pipe Detection	Separate electrode for empty pipe detection / field-tunable for optimal performance
Configuration	3 external buttons
Interfaces	RS232, RS422, RS485, ModBus RTU, Optional Ethernet ModBus TCP/IP, M-Bus or HART
Measuring Range	0.10…39.37 ft/s (0.03…12 m/s)
Measuring Accuracy	0.3% of reading ±0.08 in./s (2 mm/s)
Reproducibility	0.1%
Flow Direction	Uni-directional and bi-directional
Pulse Length	Configurable up to 2000 msec
Outputs	Short-circuit-proof and galvanically separated
Low Flow Cutoff	0…10%
Display	Graphical LCD 64 × 128, backlight, actual flow rate, totalizers, status display
Housing	Powder-coated aluminum die casting
Mounting	Detector or remote wall mount
Protective Class	IP 67
Cable Insert	Supply and signal cables 2 × M20
Remote Signal Cable	Up to 164 ft / 50 m
Coil Power	Pulsed DC
Altitude	8202 ft (2500 m)
Ambient Temperature	–4…140° F (–20…60° C)
Humidity	90% R.H. max
Approvals	NSF Listed: Models with hard rubber liner 4 in. size and up; PTFE liner, all sizes
Pollution Degree	2
Installation Category	II
Units of Measure	Gallons, ounces, MGD, liters, cubic meters, cubic feet, imperial gallon, barrel, hectoliter and acre-feet

ModMAG M1000 Amplifier
in. (mm)

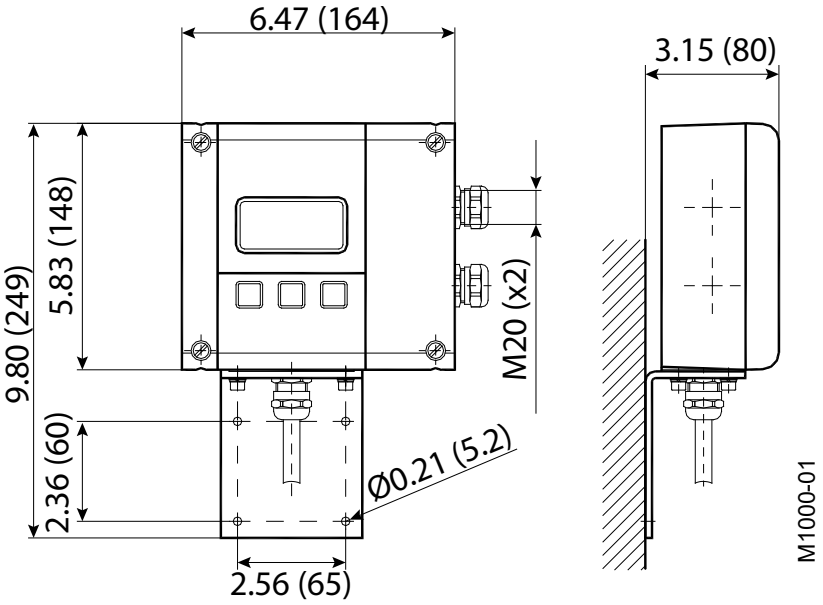

SIZE SELECTION

Size		Flow Range	
Inches	**DN**	**US**	**Metric**
1/4	6	0.0134…5.4 GPM	0.051…20.4 l/min
3/10	8	0.0239…9.6 GPM	0.090…36.2 l/min
3/8	10	0.0373…14.9 GPM	0.141…57 l/min
1/2	15	0.084…33.6 GPM	0.318…127 l/min
3/4	20	0.149…60 GPM	0.57…226 l/min
1	25	0.233…93 GPM	0.88…353 l/min
1 1/4	32	0.382…153 GPM	1.45…579 l/min
1 1/2	40	0.60…239 GPM	2.26…905 l/min
2	50	0.93…373 GPM	3.53…1414 l/min
2 1/2	65	1.58…631 GPM	0.358…143 m^3/h
3	80	2.39…956 GPM	0.54…217 m^3/h
4	100	3.73…1494 GPM	0.85…339 m^3/h
5	125	5.8…2334 GPM	1.33…530 m^3/h
6	150	8.4…3361 GPM	1.91…763 m^3/h
8	200	14.9…5975 GPM	3.39…1357 m^3/h
10	250	23.3…9336 GPM	5.3…2121 m^3/h
12	300	33.6…13,444 GPM	7.6…3054 m^3/h
14	350	45.7…18,299 GPM	10.4…4156 m^3/h
16	400	60…23,901 GPM	13.6…5429 m^3/h
18	450	76…30,250 GPM	17.2…6870 m^3/h
20	500	93…37,345 GPM	21.2…8482 m^3/h

PART NUMBER CONSTRUCTION

If you are interested in a product configuration that is not designated for your region, please contact Badger Meter.

Detector and Amplifier Ordering Information for North America

M1	-		-		-		-		-		-			
M1000	Meter Type	Detector			Electrodes & Grounding	Amplifier	Remote Cable Length	Communications/ Outputs	Wiring Method	Unit of Measure Totalizer/Flow Rate	Testing & Tagging
		HARD RUBBER C-Steel 150# flanges	PTFE C-Steel 150# flanges	PFA Stainless Steel 150# flanges							
Meter Type- Standard LL		**R1**	**P1**	**PA**							
1/4 in.	002	N/A	N/A	—							
5/16 in.	003	N/A	N/A	—							
3/8 in.	004	N/A	N/A	—							
1/2 in.	005	N/A	—	N/A							
3/4 in.	007	N/A	—	N/A							
1 in.	010	—	—	N/A							
1-1/4 in.	012	—	—	N/A							
1-1/2 in.	015	—	—	N/A							
2 in.	020	—	—	N/A							
2-1/2 in.	025	—	—	N/A							
3 in.	030	—	—	N/A							
4 in.	040	—	—	N/A							
5 in.	050	—	—	N/A							
6 in.	060	—	—	N/A							
8 in.	080	—	—	N/A							
10 in.	100	—	—	N/A							
	Electrodes and Grounding										
	Alloy C with 316 Stainless Steel Grounding Rings				A						
	Amplifier Type										
	110/220V AC; Meter Mounted					M					
	110/220V AC; Remote Mounted					R					
	110/220V AC; Remote Mounted; Submersible					S					
	24V DC; Meter Mounted					E					
	24V DC; Remote Mounted					F					
	24V DC; Remote Mounted; Submersible					G					
	Remote Cable Length										
	None						WW				
	5 ft.; Standard Cable						AA				
	10 ft.; Standard Cable						AB				
	15 ft.; Standard Cable						AC				
	30 ft.; Standard Cable						AF				
	50 ft.; Standard Cable						AK				
	75 ft.; Standard Cable						AR				
	100 ft.; Standard Cable						BW				
	125 ft.; Standard Cable						BE				
	150 ft.; Standard Cable						BK				
	Communications/Outputs										
	Standard Output							S			
	Wiring Method										
	None								XX		
	Twist Tight - 5 ft. (MTR, ASSY)								TF		
	Twist Tight - 10 ft. (MTR, ASSY)								TH		
	Twist Tight - 25 ft. (MTR, ASSY)								TJ		
	Twist Tight - 75 ft. (MTR, ASSY)								TK		
	Nicor - 6 ft. (MTR, ASSY)								NG		
	Nicor - 25 ft. (MTR, ASSY)								NJ		
	Itron - 5 ft. (MTR, ASSY)								CF		
	Itron - 25 ft. (MTR, ASSY)								CJ		
	Unit of Measure Totalizer/ Flow Rate										
	Gallons/gallons per minute									G	
	Gallons/cubic feet per minute									B	
	Gallons/cubic meters per second									D	
	Cubic Meters/gallons per minute									C	
	Cubic Meters/cubic meters per second									E	
	Cubic Meters/cubic meters per minute									T	
	Cubic Meters/cubic meters per hour									H	
	Cubic Feet/gallons per minute									F	
	Cubic Feet/cubic feet per minute									J	
	Cubic Feet/cubic meters per hour									K	
	Liters/gallons per minute									L	
	Liters/liters per second									N	
	Liters/liters per minute									P	
	Liters/liters per hour									Q	
	Million Gallons/gallons per minute									M	
	Gallons/millions gallons per day									R	
	Acre Feet/gallons per minute									A	
	Second-Foot Day/cubic feet per second									S	
	Custom Units									Z	
	Testing and Tagging										
	Factory Calibrated										F
	3rd Party Calibrated										3
	Factory Calibrated/Stainless Steel Tag										S
	3rd Party Calibrated w/ Stainless Steel Tag										T
	State of Kansas Certified										K

Detector Ordering Information for International

MID ☐ - ☐ / ☐ - ☐ / ☐ - ☐ - ☐ / ☐ - ☐

Model	
MID electromagnetic flow meter	MID
Type	
Type 2	2
Type 3	3
Type 5	5
Type 6	6
Size	
DN 6 to DN 2000	
Pressure rate	
Process connection	
DIN flanges	F
ANSI flanges	A
Threads acc. DIN 11851	D
Tri-Clamp®	T
Wafer	W
Material	
C-steel	ST
SST 1.4301 (ANSI 304)	V2
SST 1.4404 (ANSI 316)	V4
Liner	
PTFE	PT
(DN 6-10)	PFA
Hard rubber	HG
Softrubber	WG
Halar	HA
Electrodes	
Measure + empty pipe electrode	ML
Measure + grounding + empty pipe electrode	MEL
Electrode material	
Hastelloy C	HC
Tantalum	TA
Platinum/gold plated	PG
Platinum/Rhodium	PR
Housing	
C-steel	St
SST 1.4301 (ANSI 304)	V2
SST 1.4404 (ANSI 306)	V4

Amplifier Ordering Information for International

☐ ☐ ☐ m

M1000 (92…275V AC)	M10A
M1000 (9…36V DC)	M10D
M1000 blind version (V AC)	MB10A
M1000 blind version (V DC)	MB10D
M1000 blind version, with stainless steel housing (V AC)	MBS10A
M1000 blind vers ion, with stainless steel housing (V DC)	MBS10D
Mounted/remote/cable length	
Amplifier detector mounted	M
Remote version cable length	R
Remote amplifier with cable length	
Remote amplifier with 10 m cable length	10
Remote amplifier with 15 m cable length	15
Remote amplifier with 20 m cable length	20
Remote amplifier with 25 m cable length	25
Remote amplifier with 30 m cable length	30

INTENTIONAL BLANK PAGE

Control. Manage. Optimize.

ModMAG and M-Series are registered trademarks of Badger Meter, Inc. Other trademarks appearing in this document are the property of their respective entities. Due to continuous research, product improvements and enhancements, Badger Meter reserves the right to change product or system specifications without notice, except to the extent an outstanding contractual obligation exists. © 2020 Badger Meter, Inc. All rights reserved.

www.badgermeter.com