Series 380 BTU System

380DS Meter

DESCRIPTION

The Series 380 BTU Systems provide a low cost system for metering cold or hot systems. The 380DS can accurately measure flow and temperature differential to compute energy. Using either BACnet or Modbus RS-485 communications protocols or a scaled pulse output, the BTU Meter can interface with many existing control systems.

The rugged design incorporates an impeller flow sensor and two temperature probes. One temperature probe is conveniently mounted directly in the flow sensor tee. The second temperature probe is placed on either the supply or the return line, depending on ease of installation for the application. These minimal connections help simplify installation and save time.

The main advantage of the Series 380 BTU meters is the cost savings over other systems offered on the market today. The integration of flow and temperature sensors provide a single solution for metering. With this system it will be possible to meter energy where it has not been cost effective before.

Commissioning of this meter can be completed in the field via a computer connection. Setup includes energy measurement units, measurement method, communication protocol, pulse output control, fluid density, and specific heat parameters.

RS-485 Configuration

All Series 380 BTU meters are equipped with BACnet and Modbus protocols as standard features. The protocol of choice can be selected and set up in the field at the user's discretion. These common protocols allow for quick and easy commissioning while gaining valuable application data beyond energy total. Information such as Flow Rate, Flow Total, Energy Rate, Energy Total, Temp 1, Temp 2, and Delta T can all be transmitted on the RS-485 connection.

Scaled Pulse Output

If the RS-485 is not required for the application, a simple scaled pulse output is available. The pulse output would represent energy total and can be set in various units of measure. The pulse output is an open drain scaled pulse output that is compatible with a variety of PLCs, counters and the Badger Meter® 350 wireless system, so the unit is easily compatible with most inputs.

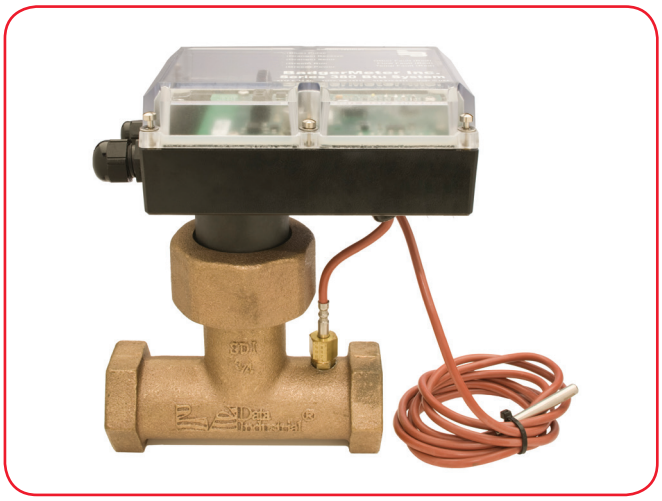

SPECIFICATIONS

Electrical Input	Power	12…35V DC, 12…28V AC
	Communication	Modbus RTU, BACnet MSTP
Electrical Output	Scaled Pulse	Open drain, 0.01…100 Hz max.
Materials	Housing	Polycarbonate
	Flow Sensor	PEEK
	Potting Material	Polyurethane
	Tee Material	Brass
Sensor Body Sizes	Tee Sizes	3/4 in., 1 in., 1-1/4 in., 1-1/2 and 2 in.
Environmental	Fluid Temperature	20…260° F (–6.7…126.7° C)
	Ambient Temperature	–4…149° F (–20…65° C)
Accuracy	± 2% of flow rate within flow range	
	± 0.5% repeatability	
	RTD meets IEC751 Class B	
Flow Range	1…15 ft/sec	
	Diameter	**380 BTU Meter Flow Range**
	0.75 in. (19 mm)	1.65…24.69 gpm (6…93 lpm)
	1 in. (25 mm)	2.70…40.48 gpm (10…153 lpm)
	1.25 in. (32 mm)	4.66…69.93 gpm (17…265 lpm)
	1.5 in. (38 mm)	6.35…95.18 gpm (24…360 lpm)
	2 in. (50 mm)	10.49…157.34 gpm (40…595 lpm)
	This chart is based on ASME/ANSI B336.10 *Welded and Seamless Wrought Steel Pipe* and ASME/ANSI B3619 *Stainless Steel Pipe*.	

Series 380 Btu System Ordering Matrix

380 DS Meter

Example: 380	2	07	0	0	0	-	1	2	0	2
TYPE										
DS - Dual Service	2									
SIZE										
0.75"		07								
1"		10								
1.25"		12								
1.5"		15								
2"		20								
ELECTRONIC HOUSING										
Polycarbonate			0							
OUTPUT										
Scaled Pulse and RS-485 (Modbus and BACnet)				0						
DISPLAY										
N/A					0					
O-RING										
EPDM							1			
SHAFT										
Tungsten Carbide (STANDARD)								2		
IMPELLER										
Stainless Steel									0	
BEARING										
Ketron®										2

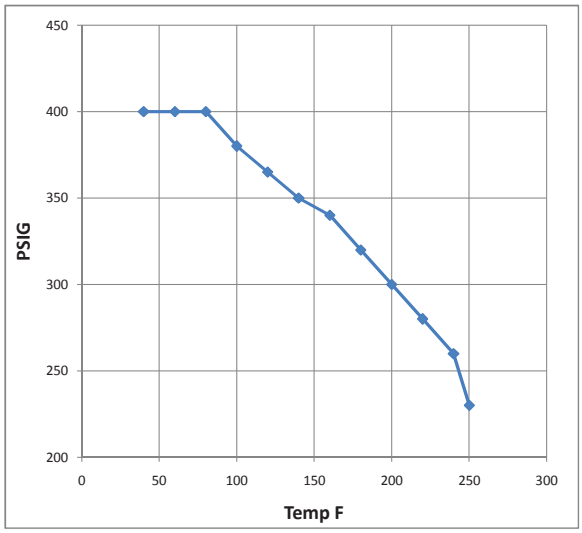

*Max. Temp. 260° F (126.7° C) 230 psig
Unit can be used to 20° F (–6.7° C) @ 400 psig

DIMENSIONS

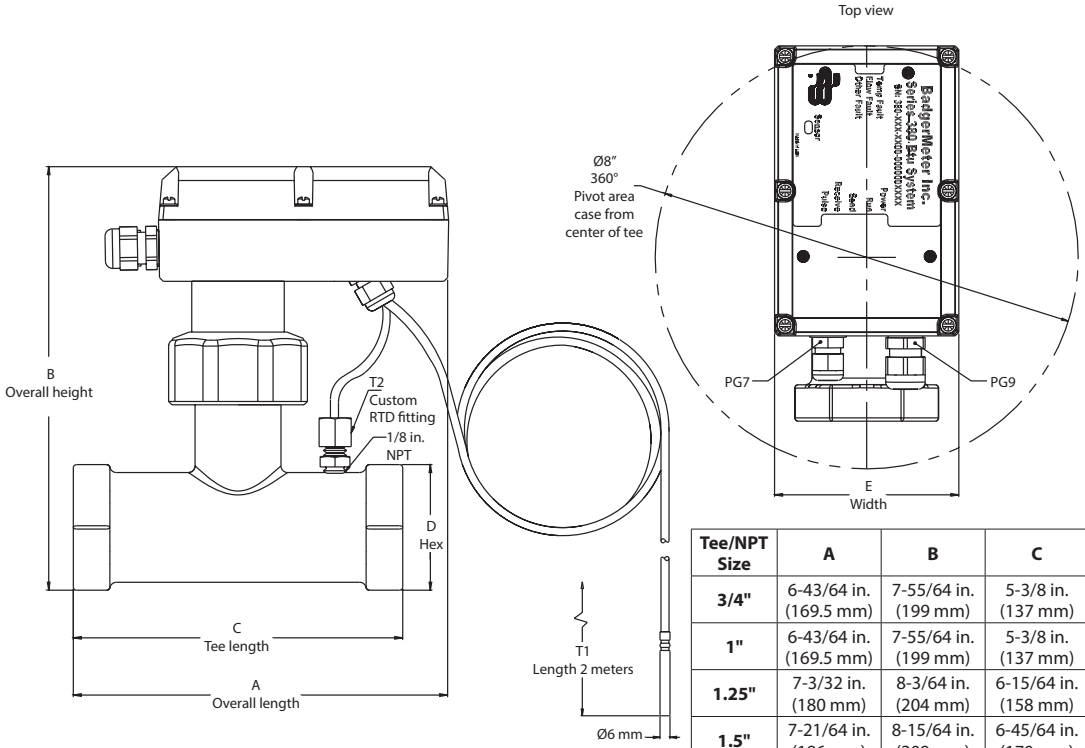

Tee/NPT Size	A	B	C	D	E	Weight
3/4"	6-43/64 in. (169.5 mm)	7-55/64 in. (199 mm)	5-3/8 in. (137 mm)	2 in. (50 mm)	3-31/64 in. (88 mm)	6.5 lbs (2.9 kg)
1"	6-43/64 in. (169.5 mm)	7-55/64 in. (199 mm)	5-3/8 in. (137 mm)	2 in. (50 mm)	3-31/64 in. (88 mm)	7.5 lbs (3.4 kg)
1.25"	7-3/32 in. (180 mm)	8-3/64 in. (204 mm)	6-15/64 in. (158 mm)	2-3/8 in. (60 mm)	3-31/64 in. (88 mm)	9.5 lbs (4.3 kg)
1.5"	7-21/64 in. (186 mm)	8-15/64 in. (209 mm)	6-45/64 in. (170 mm)	2-3/4 in. (70 mm)	3-31/64 in. (88 mm)	11 lbs (4.9 kg)
2"	7-7/8 in. (200 mm)	8-1/2 in. (216 mm)	7-49/64 in. (197 mm)	3-5/16 in. (84 mm)	3-31/64 in. (88 mm)	13 lbs (5.9 kg)

Control. Manage. Optimize.

Data Industrial is a registered trademark of Badger Meter, Inc. Other trademarks appearing in this document are the property of their respective entities. Due to continuous research, product improvements and enhancements, Badger Meter reserves the right to change product or system specifications without notice, except to the extent an outstanding contractual obligation exists. © 2016 Badger Meter, Inc. All rights reserved.

www.badgermeter.com

The Americas | Badger Meter | 4545 West Brown Deer Rd | PO Box 245036 | Milwaukee, WI 53224-9536 | 800-876-3837 | 414-355-0400
México | Badger Meter de las Americas, S.A. de C.V. | Pedro Luis Ogazón N°32 | Esq. Angelina N°24 | Colonia Guadalupe Inn | CP 01050 | México, DF | México | +52-55-5662-0882
Europe, Middle East and Africa | Badger Meter Europa GmbH | Nurtinger Str 76 | 72639 Neuffen | Germany | +49-7025-9208-0
Europe, Middle East Branch Office | Badger Meter Europe | PO Box 341442 | Dubai Silicon Oasis, Head Quarter Building, Wing C, Office #C209 | Dubai / UAE | +971-4-371 2503
Czech Republic | Badger Meter Czech Republic s.r.o. | Maříkova 2082/26 | 621 00 Brno, Czech Republic | +420-5-41420411
Slovakia | Badger Meter Slovakia s.r.o. | Racianska 109/B | 831 02 Bratislava, Slovakia | +421-2-44 63 83 01
Asia Pacific | Badger Meter | 80 Marine Parade Rd | 21-06 Parkway Parade | Singapore 449269 | +65-63464836
China | Badger Meter | 7-1202 | 99 Hangzhong Road | Minhang District | Shanghai | China 201101 | +86-21-5763 5412
Switzerland | Badger Meter Swiss AG | Mittelholzerstrasse 8 | 3006 Bern | Switzerland | +41-31-932 01 11

Legacy Document Number: DTB-083-01