Short explanation of medical terminology of the medical indication treated by your implant and a short explanation of the medical indication of the last implant listed in the report and its terminology, to better highlight the difference

DA2P=Disk Asymmetric Partial Prothesis

Medical indications: same of the others

The DA2P:
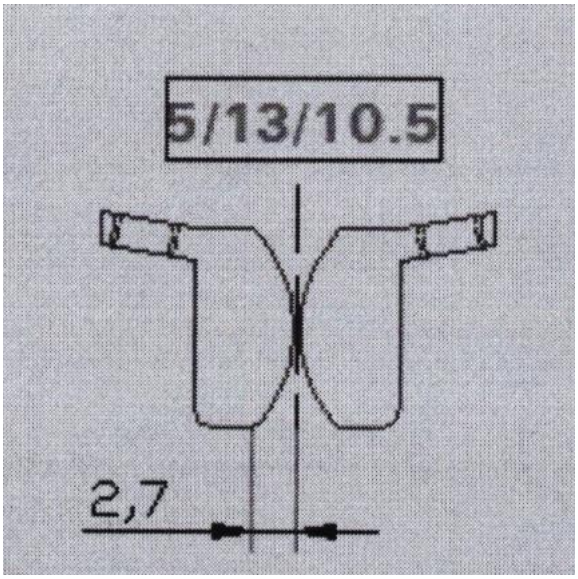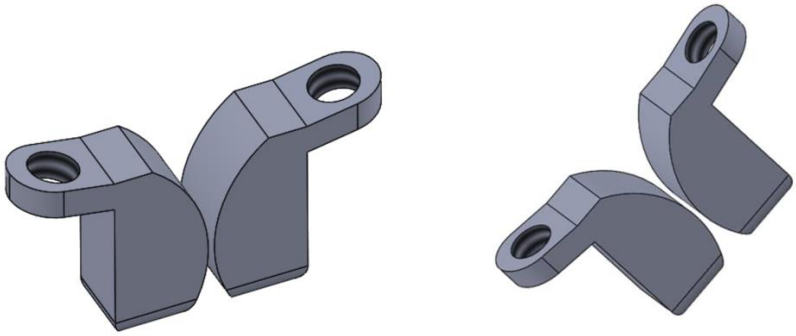
- Alloy every natural movement of the vertebras (like a total disk prothesis)
- The future is to have a natural prothesis of the disk