Table of contents

Sheet 1: Project overview (this page)
Sheet 2: Top
Sheet 3: STM32 microcontroller I/Os
Sheet 4: Supply
Sheet 5 : RF front-end
Sheet 6 : Eigene Schaltungserweiterungen

Open Platform License Agreement

The Open Platform License Agreement ("Agreement") is a binding legal contract between you ("You") and STMicroelectronics International N.V. ("ST"), a company incorporated under the laws of the Netherlands acting for the purpose of this Agreement through its Swiss branch 39, Chemin du Champ des Filles, 1228 Plan-les-Ouates, Geneva, Switzerland.

By using the enclosed reference designs, schematics, PC board layouts, and documentation, in hardcopy or CAD tool file format (collectively, the "Reference Material"), You are agreeing to be bound by the terms and conditions of this Agreement. Do not use the Reference Material until You have read and agreed to this Agreement terms and conditions. The use of the Reference Material automatically implies the acceptance of the Agreement terms and conditions.

The complete Open Platform License Agreement can be found on www.st.com/opla.

Legend

General comment such as function title, configuration, ...
Text to be added to silkscreen.
Warning text.

Notes to generate the board layout.

U_Top
Datei: Top.kicad_sch

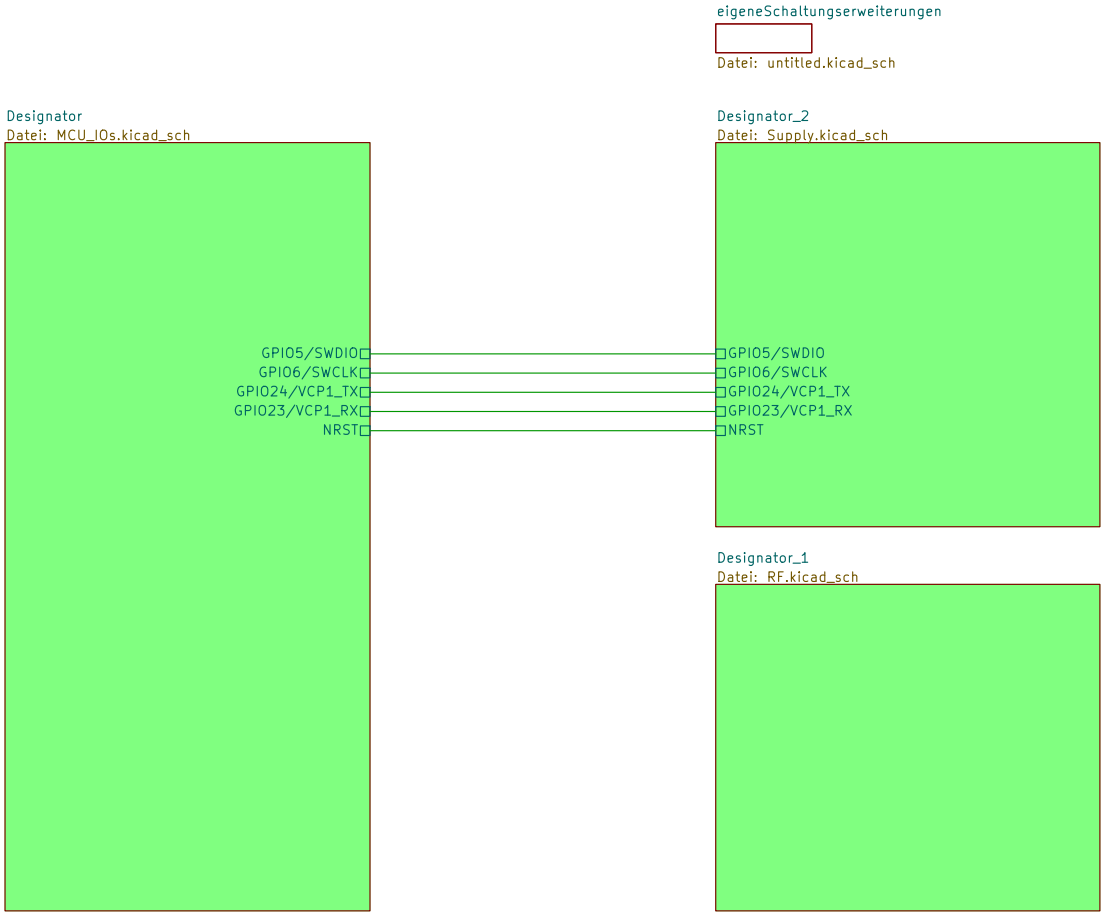

STMicroelectronics

Sheet: /U_Top/
File: Top.kicad_sch

Title: Top Schematic

Size: A4	Date: Not used	**Rev: Not used**
KiCad E.D.A. 10.0.0-rc1.1-491-g8818f79dcf		Id: 2/6

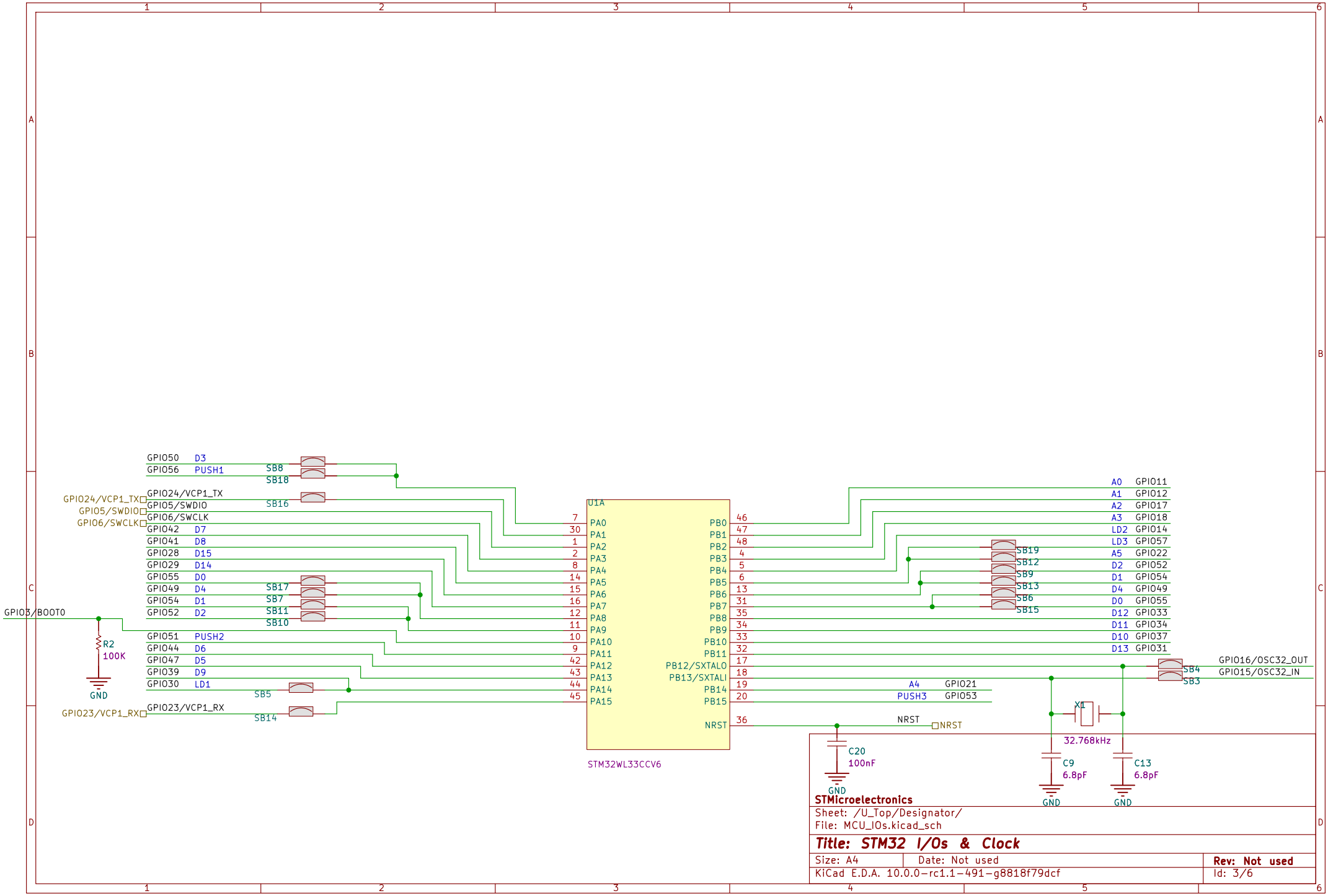
U1A
STM32WL33CCV6
PA0 7
PA1 30
PA2 1
PA3 2
PA4 8
PA5 14
PA6 15
PA7 16
PA8 12
PA9 11
PA10 10
PA11 9
PA12 42
PA13 43
PA14 44
PA15 45
PB0 46
PB1 47
PB2 48
PB3 4
PB4 5
PB5 6
PB6 13
PB7 31
PB8 35
PB9 34
PB10 33
PB11 32
PB12/SXTALO 17
PB13/SXTALI 18
PB14 19
PB15 20
NRST 36
GPIO50 D3
GPIO56 PUSH1
SB8
SB18
GPIO24/VCP1_TX
GPIO5/SWDIO
GPIO6/SWCLK
SB16
GPIO24/VCP1_TX
GPIO5/SWDIO
GPIO6/SWCLK
GPIO42 D7
GPIO41 D8
GPIO28 D15
GPIO29 D14
GPIO55 D0
GPIO49 D4
GPIO54 D1
GPIO52 D2
SB17
SB7
SB11
SB10
GPIO3/BOOT0
R2
100K
GND
GPIO51 PUSH2
GPIO44 D6
GPIO47 D5
GPIO39 D9
GPIO30 LD1
SB5
GPIO23/VCP1_RX
SB14
GPIO23/VCP1_RX
A0 GPIO11
A1 GPIO12
A2 GPIO17
A3 GPIO18
LD2 GPIO14
LD3 GPIO57
A5 GPIO22
D2 GPIO52
D1 GPIO54
D4 GPIO49
D0 GPIO55
D12 GPIO33
D11 GPIO34
D10 GPIO37
D13 GPIO31
SB19
SB12
SB9
SB13
SB6
SB15
GPIO16/OSC32_OUT
GPIO15/OSC32_IN
SB4
SB3
A4 GPIO21
PUSH3 GPIO53
NRST
NRST
X1
32.768kHz
C20
100nF
GND
C9
6.8pF
GND
C13
6.8pF
GND
STMicroelectronics
Sheet: /U_Top/Designator/
File: MCU_IOs.kicad_sch
Title: STM32 I/Os & Clock
Size: A4
Date: Not used
Rev: Not used
KiCad E.D.A. 10.0.0-rc1.1-491-g8818f79dcf
Id: 3/6

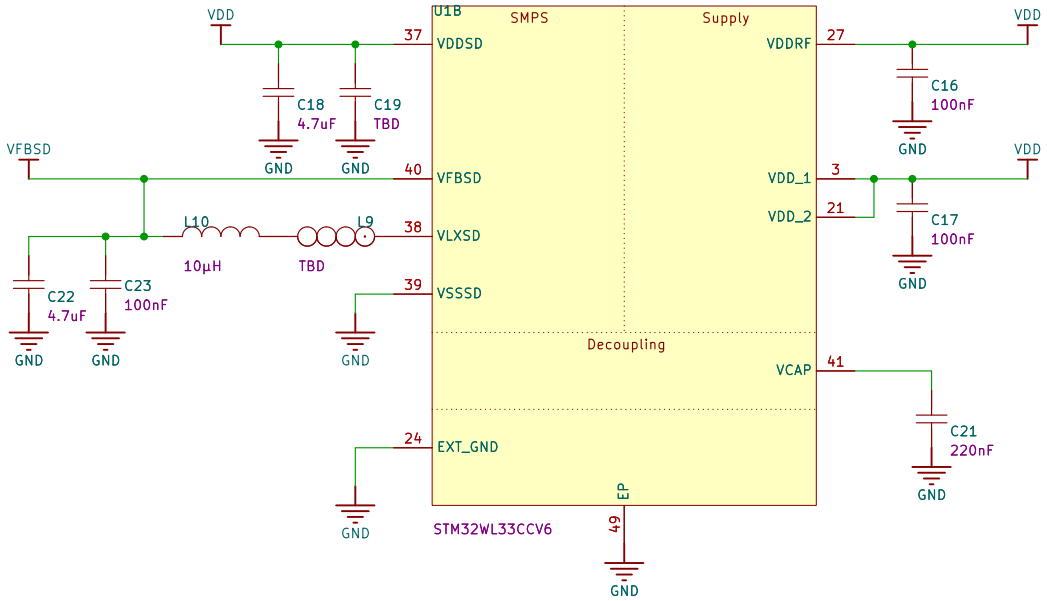

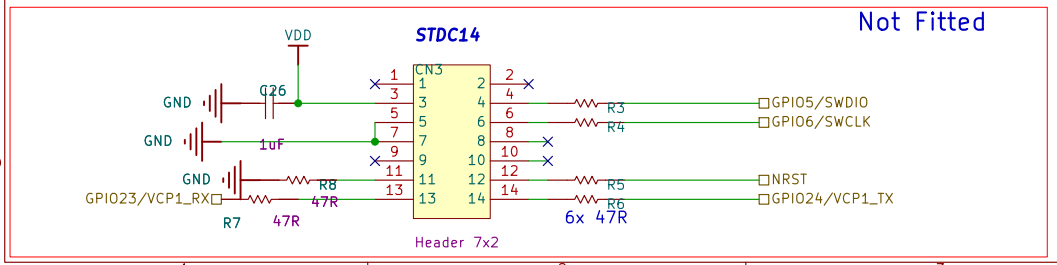

STMicroelectronics

Sheet: /U_Top/Designator_2/

File: Supply.kicad_sch

Title: STM32 power

Size: A4	Date: Not used	Rev: Not used
KiCad E.D.A. 10.0.0-rc1.1-491-g8818f79dcf		Id: 4/6

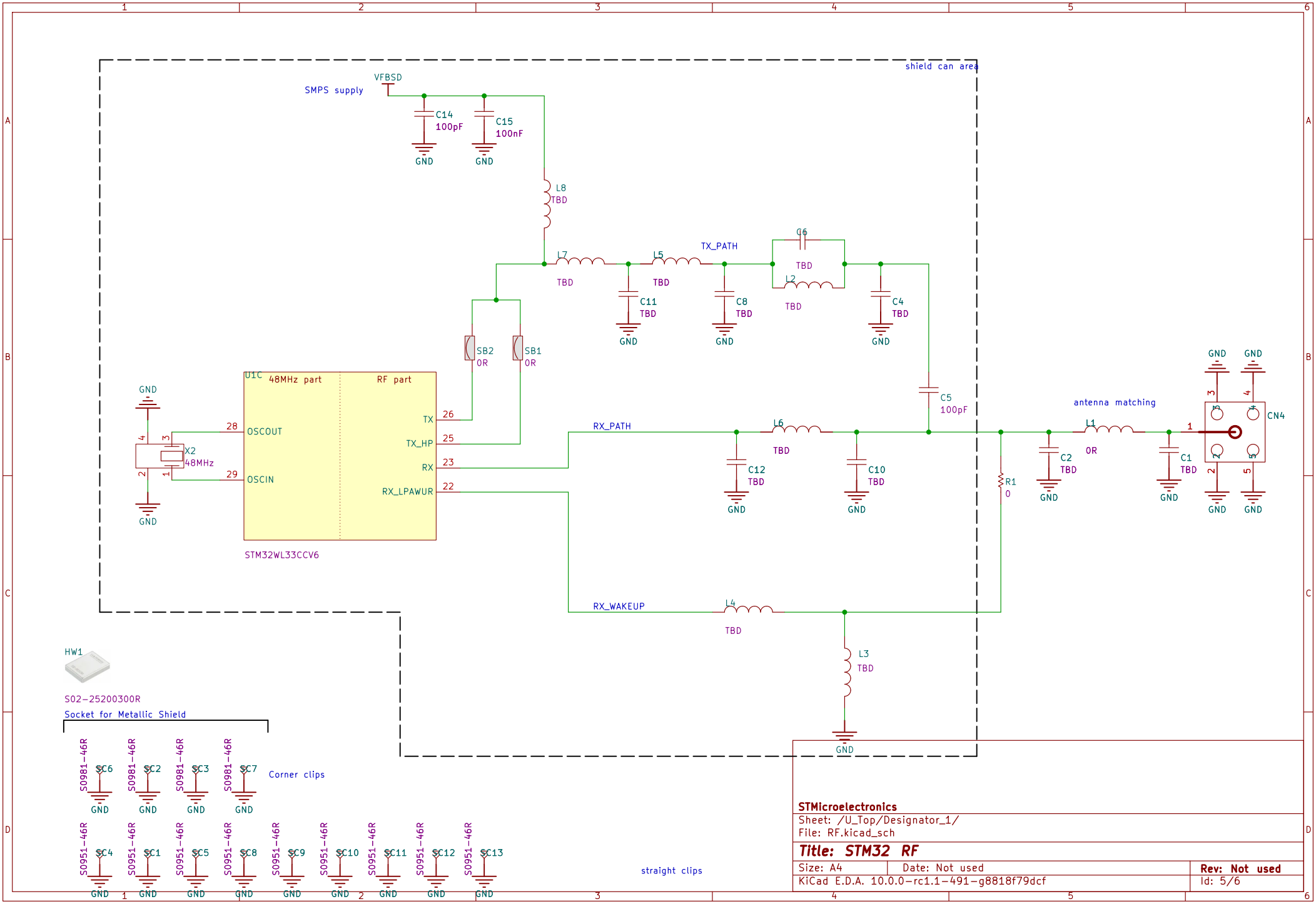

STMicroelectronics

Sheet: /U_Top/Designator_1/

File: RF.kicad_sch

Title: STM32 RF

Size: A4	Date: Not used	Rev: Not used
KiCad E.D.A. 10.0.0-rc1.1-491-g8818f79dcf		Id: 5/6

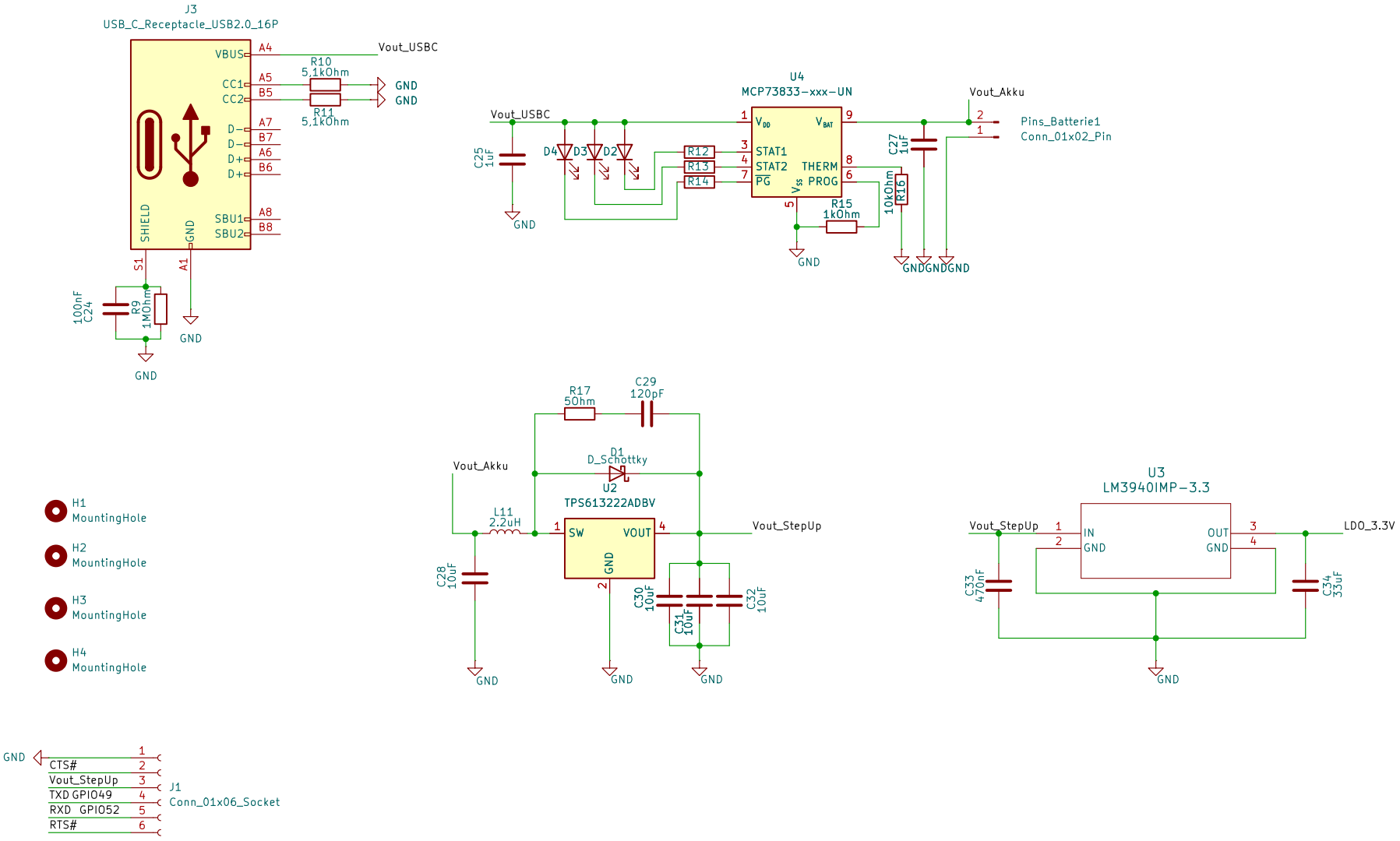

Sheet: /U_Top/eigeneSchaltungserweiterungen/
File: untitled.kicad_sch

Title:

Size: A4	Date:	**Rev:**
KiCad E.D.A. 10.0.0−rc1.1−491−g8818f79dcf		Id: 6/6