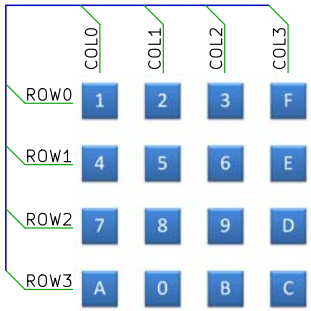

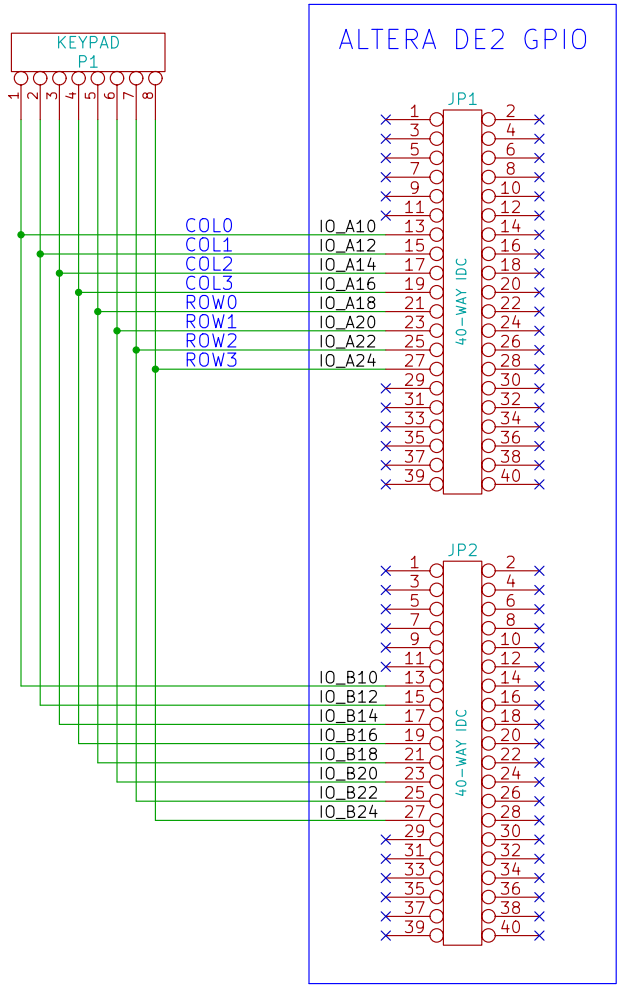

IO_A10 is GPIO_0[10]
IO_A12 is GPIO_0[12]
...
IO_A24 is GPIO_0[24]

IO_B10 is GPIO_1[10]
IO_B12 is GPIO_1[12]
...
IO_B24 is GPIO_1[24]

File: keypad-matrix.sch		
Sheet: /		
Title: DE2 KEYPAD MATRIX ADAPTER		
Size: User	**Date: 19 sep 2012**	**Rev: 2**
KiCad E.D.A.		Id: 1/1