Introduction to Robotics: Kinematics Part 1 – Locomotion

Shuai Zhang

Department of Computer Science
University of Central Oklahoma

Credit to the book Introduction to Autonomous Mobile Robots, by Roland Siegwart and Illah Nourbakhsh

Lecture Plan

- Introduction to robot motion
  - Wheeled robots
- Different wheels
- Wheel configurations
- Example Code of wheel control
- Kinematics

Robot Motion 1

- In Chapter 1 Introduction, we have roughly discussed different types of robots, e.g. manipulators, wheeled robots, legged robots, UAVs, AUVs, etc.
  - UAV and AUV have almost full degree of freedom
  - The joint control of manipulator and legged robot can be extended based on the wheeled robots
    - With higher degree of freedom (DOF)
    - **6 DOF – 3 translational, 3 rotational**
    - We have also briefly talked about the pros/cons
      - E.g. Stability, maneuverability, etc.

Robot Motion 2

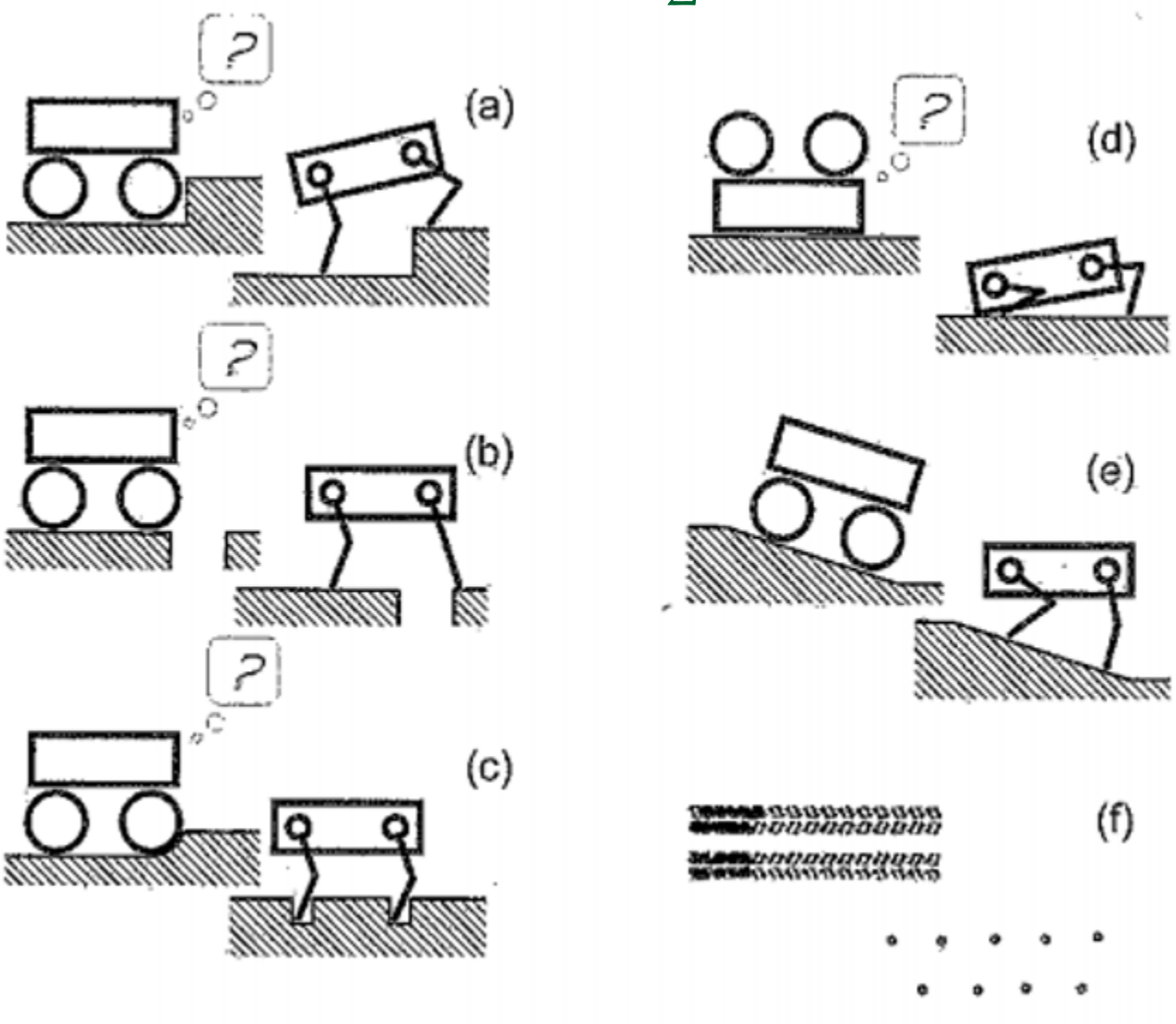

- (a) steps
- (b) gaps
- (c) sandy patches
- (d) fallen
- (e) keep the payload leveled
- (f) environment impact

- Legged design involves power and mechanical complexity -> more motors

Robot Motion 3

- Motion of wheeled robots is the foundation
  - We will focus on wheeled robots
  - On flat surfaces: 2D motion
  - **3 DOF: 2 translational, 1 rotational**

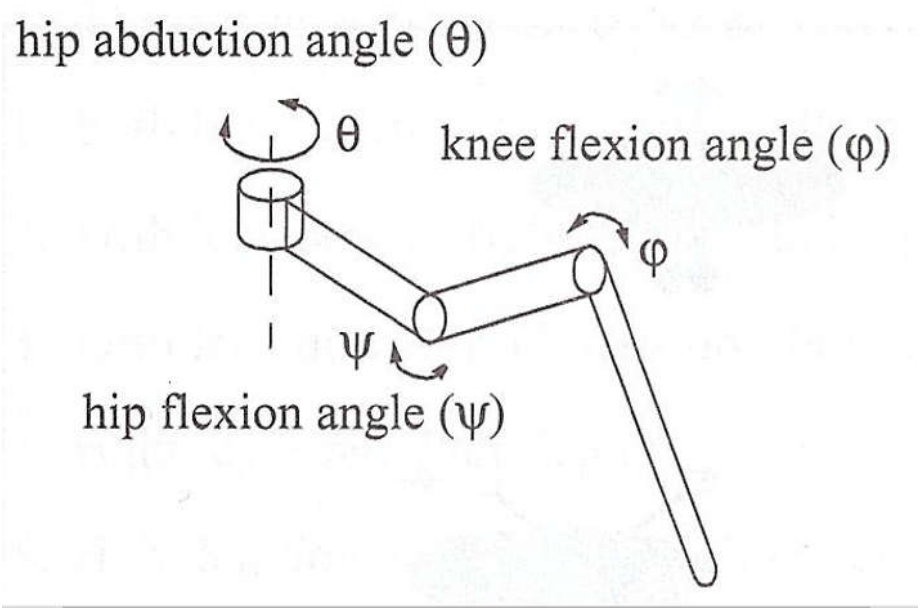

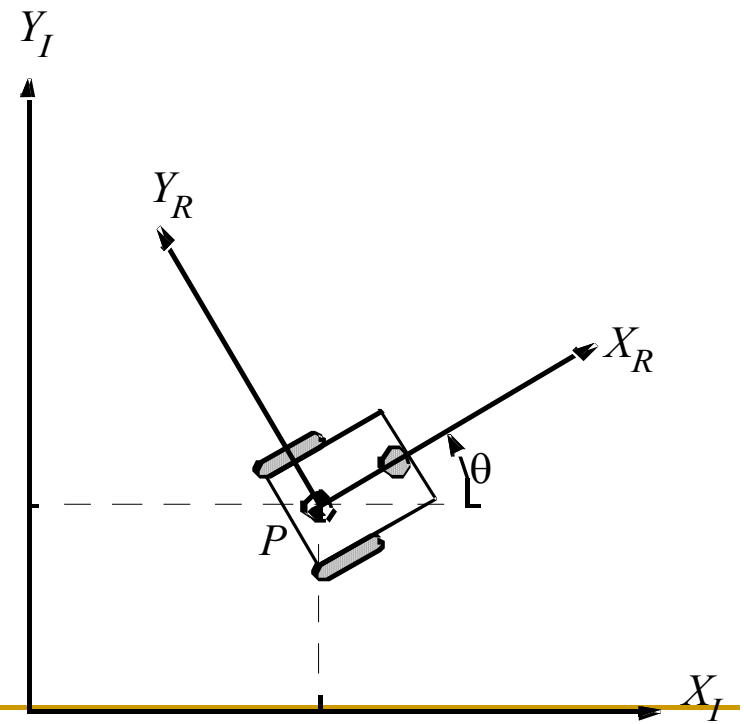

Robot Motion 4

- What can we do with 3 motors?
  - Typically 2 wheels + 1 arm
  - https://www.youtube.com/watch?v=Mp8Y2yjV4fU

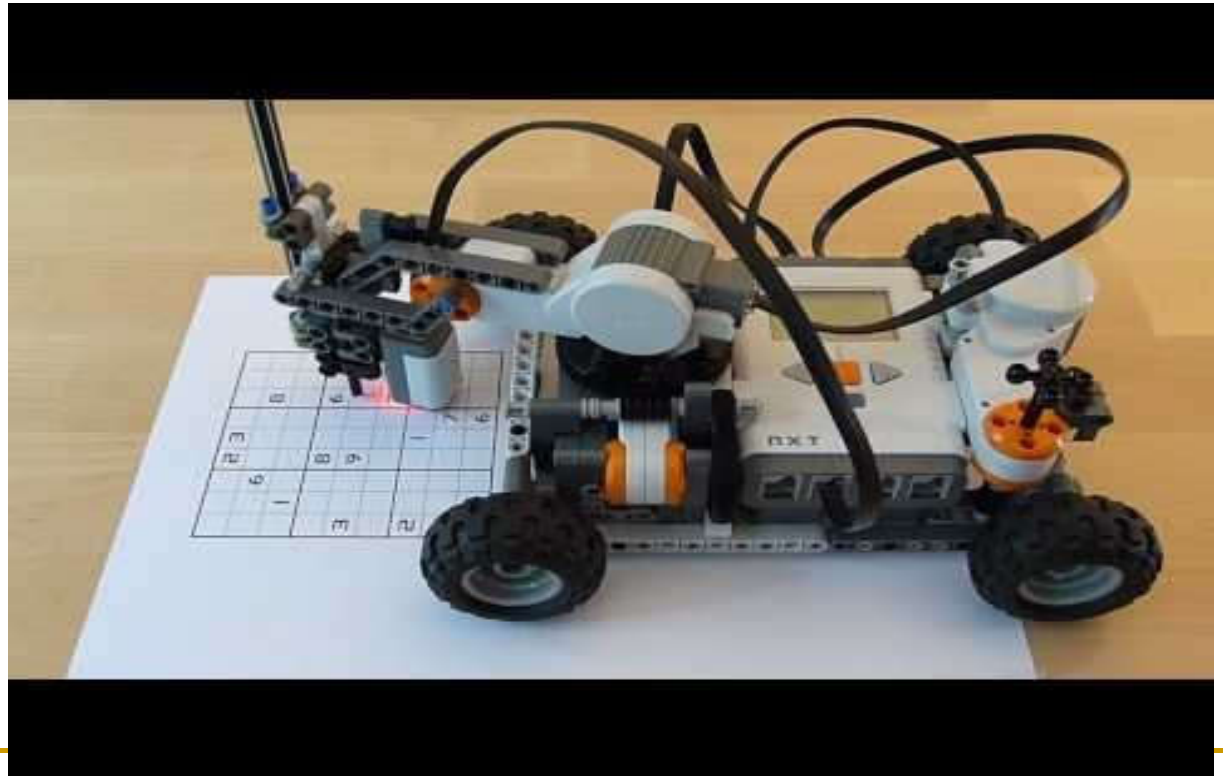

Different Wheels 1

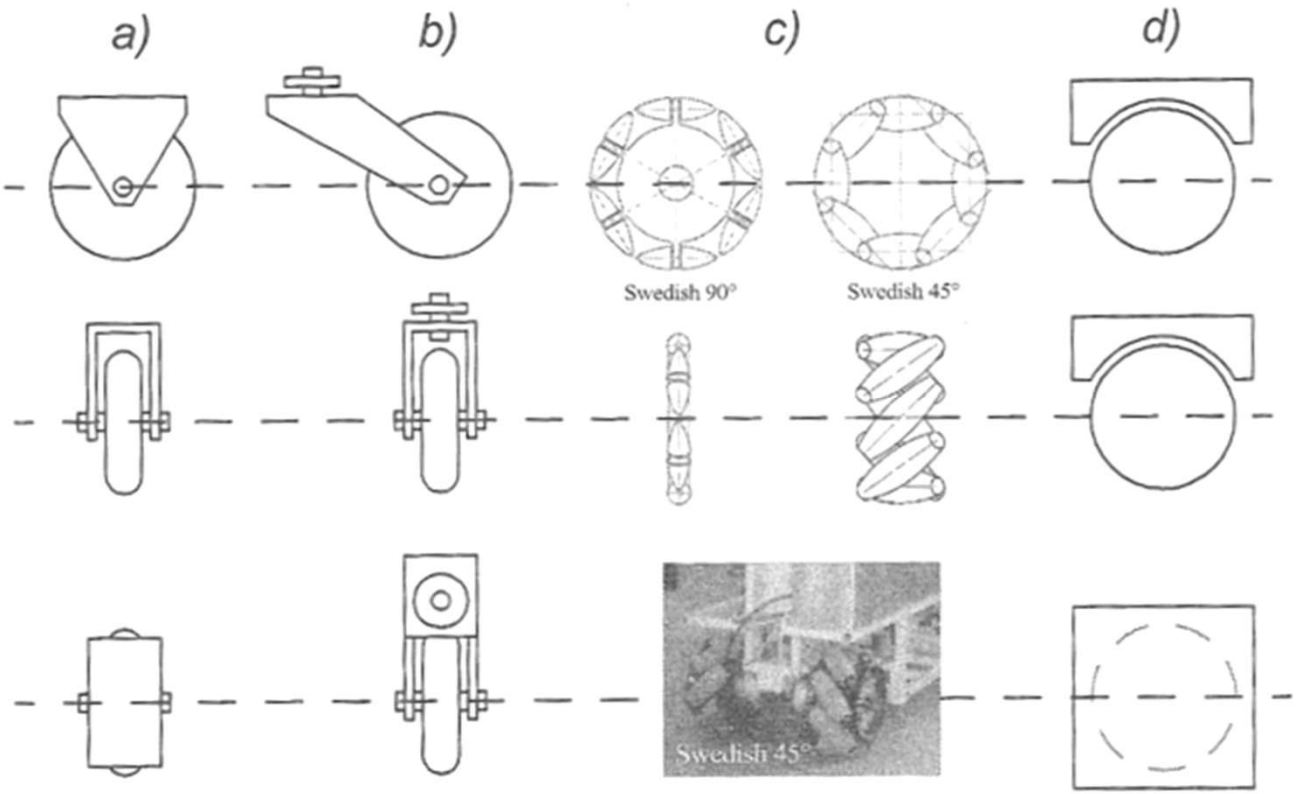

- (a) standard wheel
- (b) caster wheel
- (c) Swedish wheel
- (d) ball/spherical wheel

Different Wheels 2

- Standard wheel
  - 1 DOF: 1 translational
  - Highly directional
    - To change the direction: must has a motor to steer along a vertical axis
    - Imagine the front wheel of a bicycle or a motorcycle: hands steering just like a motor
- Caster wheel
  - 2 DOF: 1 translational, 1 rotational
  - Change direction: rotates around an offset axis
    - The force for steering can be achieved by setting different speeds of other two wheels: **differential drive**

Different Wheels 3

Swedish wheel

Red:

robot moving direction

Blue:

wheel drive direction

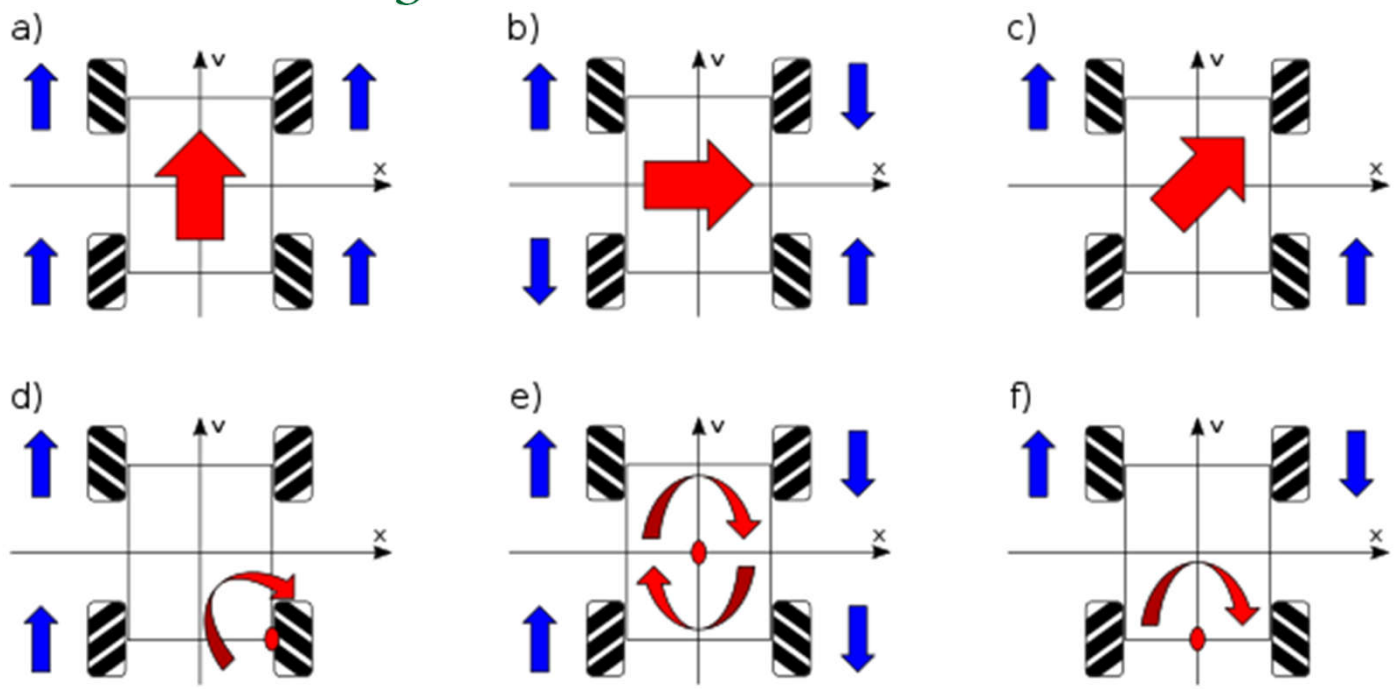

- (a) straight ahead
- (b) sideway
- (c) diagonal
- (d) around a wheel
- (e) rotate
- (f) rotate around the center of one axle

Different Wheels 4

- Swedish wheel (cont'd)
  - Omnidirectional: move along any direction
    - (a), (b) and (e): 3 DOF
    - Omnidirectional on a 2D plane
- Spherical wheel
  - A truly omnidirectional wheel
  - Powered to spin along any direction
  - Imagine the old-fashion mechanical mouse

Different Wheels 5

- Holonomic robots
  - Controllable # of degrees of freedom = Total # of degrees of freedom

Holonomic:

- Can go to any direction immediately

Nonholonomic:

- Two parallel wheels form constraints, e.g. impossible to move towards the perpendicular directions
- 2 controllable DOF, out of total 3 DOF

Wheel Configurations 1

- Wheel arrangement/configuration/geometry
  - How to re-invent based on different wheels?
  - Different combinations
    - E.g. 2 standard wheels + 1 caster wheel
  - Different placements
    - E.g. front drive wheels, connected wheels
- These choices determine
  - Maneuverability
    - Mechanical constraints: omnidirectional?
  - Controllability
    - Accuracy of the maneuverable control
  - Stability
    - E.g. 2 wheels are typically not stable – bicycle, scooter

Wheel Configurations 2

- Icons to be used for wheel configurations:

Icons for the each wheel type are as follows:	
	unpowered omnidirectional wheel (spherical, castor, Swedish);
	motorized Swedish wheel (Stanford wheel);
	unpowered standard wheel;
	motorized standard wheel;
	motorized and steered castor wheel;
	steered standard wheel;
	connected wheels.

Wheel Configurations 3

- Two wheels

Arrangement	Description
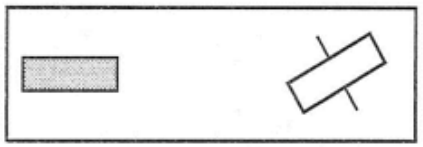	One steering wheel in the front, one traction wheel in the rear
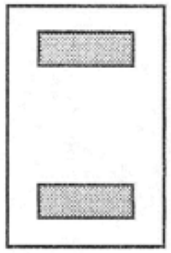	Two-wheel differential drive with the center of mass (COM) below the axle

Wheel Configurations 4

- Three wheels

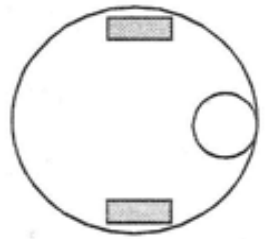	Two-wheel centered differential drive with a third point of contact
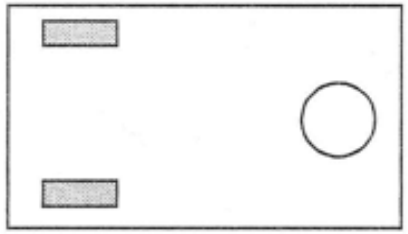	Two independently driven wheels in the rear/front, 1 unpowered omnidirectional wheel in the front/rear
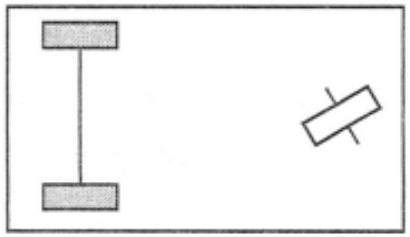	Two connected traction wheels (differential) in rear, 1 steered free wheel in front
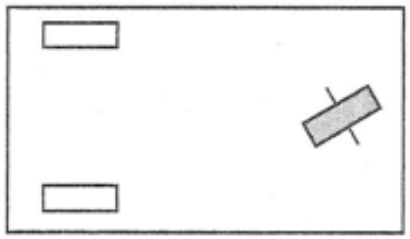	Two free wheels in rear, 1 steered traction wheel in front

Wheel Configurations 5

- Four wheels

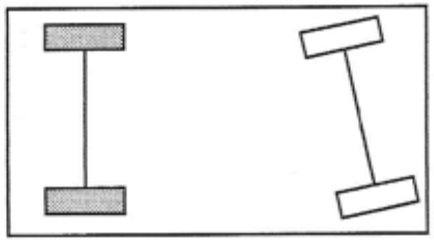	Two motorized wheels in the rear, 2 steered wheels in the front; steering has to be different for the 2 wheels to avoid slipping/skidding.
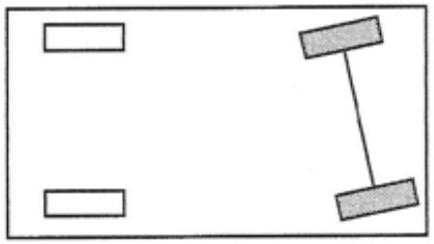	Two motorized and steered wheels in the front, 2 free wheels in the rear; steering has to be different for the 2 wheels to avoid slipping/skidding.
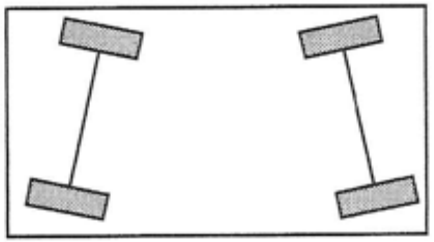	Four steered and motorized wheels
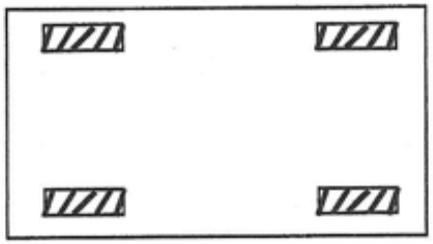	Four omnidirectional wheels

Wheel Configurations 6

- Examples:

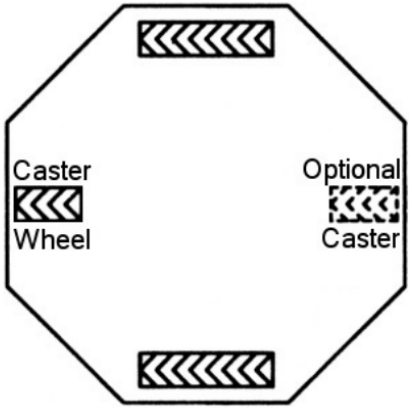

Maneuverability? Controllability? Stability?

Wheel Configurations 7

- Lego EV3
  - 2 large motors + 1 medium motor
  - A common configuration: 2 motorized standard wheels + 1 caster wheel
    - **Example**: **Rov3r**, pp. 342 – 350 in the textbook
- Proper placement of caster wheels

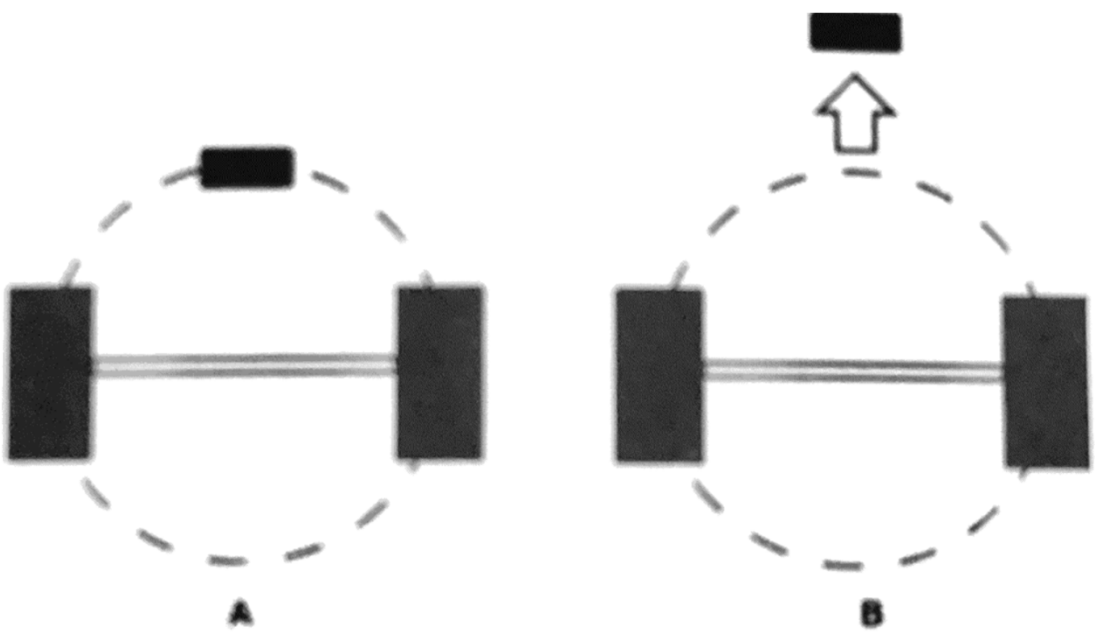

- (A) best when all wheels are in the same circle
- (B) the vehicle may jump around while rotating

Wheel Configurations 8

- Ackerman steering
  - **Example**: Ackerman, pp. 375 – 389 in the textbook
  - **Another example**: formula race car https://magbuhatrobotics.files.wordpress.com/2017/05/chapter-12.pdf

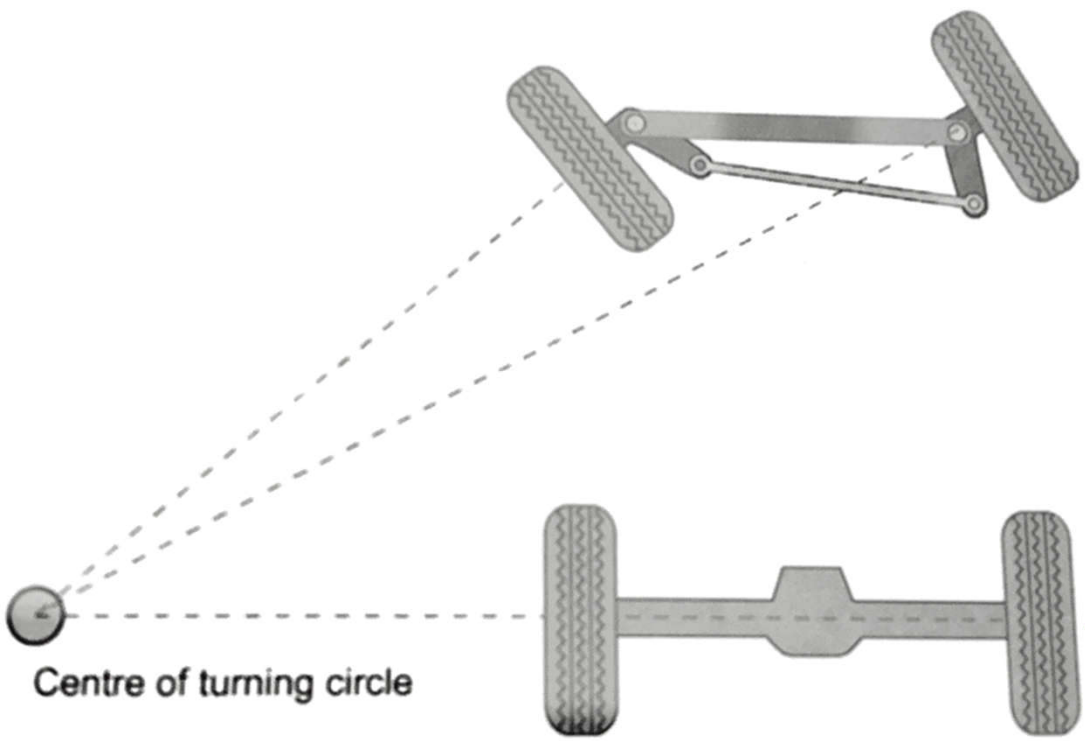

- Two steering wheels are not connected by a single axle
- Two tires are angled in different directions
- Tight turns + less slippage

Example Code 1

- We can think about coding on EV3
- MeasureMoves.java
  - From the textbook
  - http://variantpress.com/books/maximum-lego-mindstorms-ev3/
- Differential Drive
  - Steering can be achieved by setting different speeds of other two wheels
  - Can rotate, turn a specific angle
  - Commonly used for caster wheel and Ackerman steering

Example Code 2

```
public class MeasureMoves {
  public static void main(String [] args) {
    double diam = DifferentialPilot.WHEEL_SIZE_EV3;
    double trackwidth = 15.2; // or 14.5
    DifferentialPilot rov3r = new DifferentialPilot(diam, trackwidth,
Motor.C, Motor.B);
    rov3r.travel(100);
    LCD.drawString("Press ENTER", 0, 3);
    Button.ENTER.waitForPressAndRelease();
    rov3r.rotate(1080);
    Motor.B.close();
    Motor.C.close();
  }
}
```

Example Code 3

- Questions:
  - How to use the diameter and track width?
  - How to control the rotation speed and angle?
- Answers in next lecture.