# Introduction to Robotics: Kinematics Part 2 – Kinematic Models

Shuai Zhang

Department of Computer Science
University of Central Oklahoma

Credit to the book Introduction to Autonomous Mobile Robots, by Roland Siegwart and Illah Nourbakhsh

# Lecture Plan

- Motion from Robot's View
- Gearing
- Another Code Example
- Extension: Four-Wheel Ackerman

# Motion from Robot's View 1

- We will first work on Differential Drive
  - Two motors, one per wheel
    - Steering achieved by setting different speeds
    - Wheels run at equal speed for straight-line motion
    - Wheels run at equal and opposite speeds to turn on spot
    - Other combinations of speeds lead to motion in a circular arc
  - The image on the right: Circular Path of a differential drive robot
    - $R$ the radius of the circular path
      - From the center of gravity/mass
    - $w$ is the distance between two wheels, or we call it track width

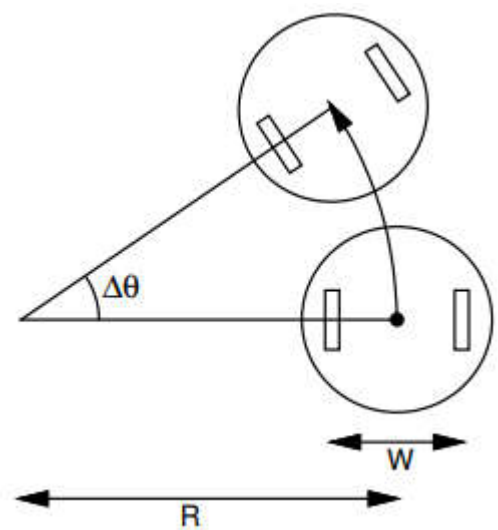

# Motion from Robot's View 2

- $W$ is configuration information of the robot that is determined when the robot is created
- Then we can control the speeds of the wheels
  - Different speeds of wheels
  - Different travelled distances
- How can we get the right speed?
  - Two wheels share the same angular speed -> same turned angle
  - Relation between angular speed and linear speed?
    - The key is the radius $R$ of the turn

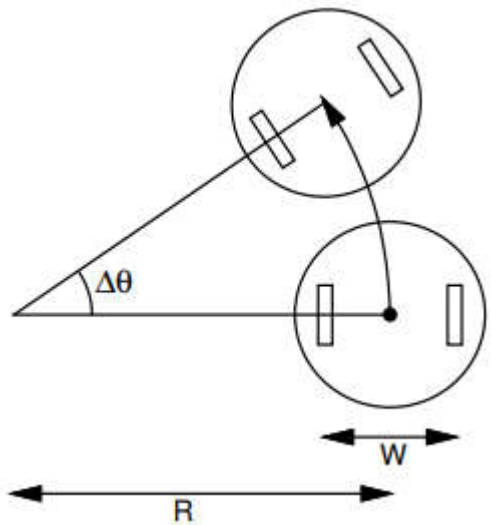

# Motion from Robot's View 3

- How to find the radius and angle of a turn?
  - Consider a period of motion
  - In $\Delta t$, the robot moves along the arc through angle $\Delta\theta$
  - Left wheel
    - Moves $v_L \Delta t$
    - The radius of arc: $R - \frac{W}{2}$
  - Right wheel
    - Moves $v_R \Delta t$
    - The radius of arc: $R + \frac{W}{2}$
  - Both wheel have the same turned angle $\Delta\theta$
    - $\Delta\theta = \frac{v_L \Delta t}{R - \frac{W}{2}} = \frac{v_R \Delta t}{R + \frac{W}{2}}$
    - $R = \frac{W(v_L + v_R)}{2(v_R - v_L)}$ and $\Delta\theta = \frac{(v_R - v_L)\Delta t}{W}$

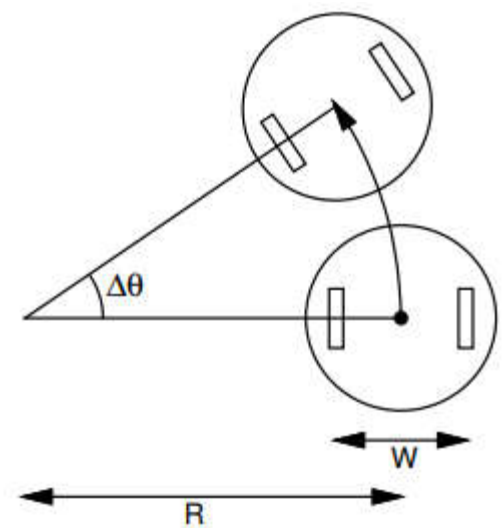


**Forward Kinematics**

From wheel speeds to movement

# Motion from Robot's View 4

- Then what are speeds of the wheels?
  - In many real case, we have the radius $R$ of the circular path as a pre-specified target, and we would like to know the speeds of the wheels
  - The angular velocity $\omega$ could be another pre-specified target
  - $\omega = \frac{\Delta\theta}{\Delta t} = \frac{v_L}{R-\frac{W}{2}} = \frac{v_R}{R+\frac{W}{2}}$
  - $v_L = \omega \cdot \left(R - \frac{W}{2}\right)$
  - $v_R = \omega \cdot (R + \frac{W}{2})$
  - These are the settings for your motors!

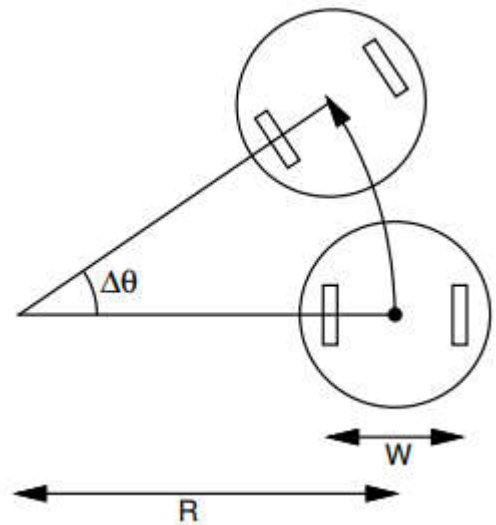


**Inverse Kinematics**: From desired motion to wheel speed

# Motion from Robot's View 5

- The previous model is for one of our common models: caster wheel
- We can move on and try another model: Ackerman steering
- The image on the right: the single-rear-wheel-drive Ackerman steering robot in our textbook
  - Do the front wheels always work as expected?

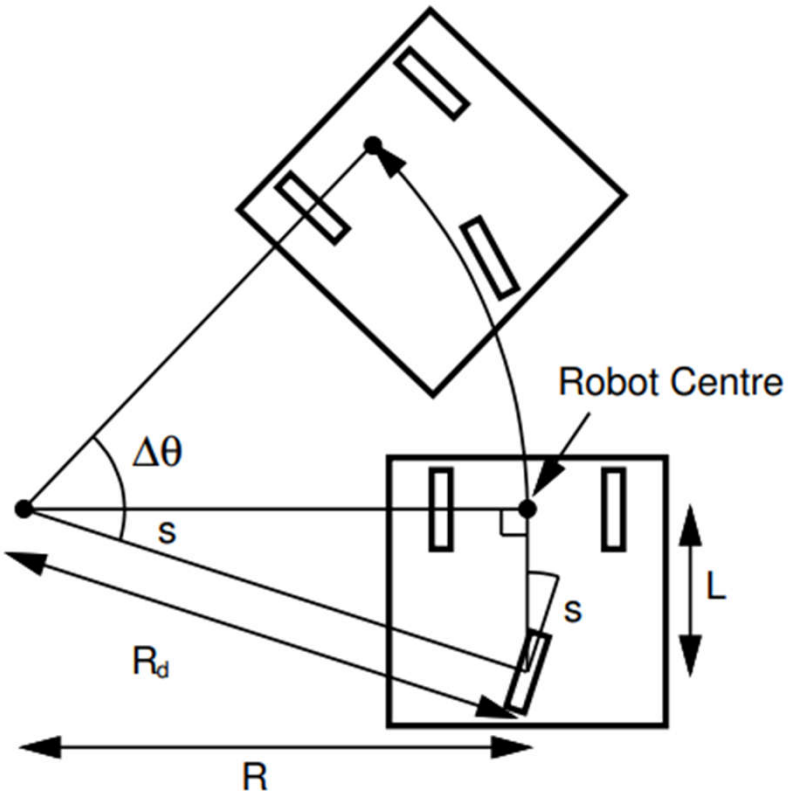

# Motion from Robot's View 6

- The angle $s$ of the rear wheel determines the radius $R$ of the circular path
  - There are still two motors: one to move it forward, and one to control the angle
- Ackerman forward kinematics:
  - Given angle $s$ and velocity $v$ of the rear wheel
  - $R = \frac{L}{\tan s}$
  - $R_d = \frac{L}{\sin s}$
  - $\Delta\theta = \frac{v\,\Delta t}{R_d} = \frac{v\,\Delta t \sin s}{L}$

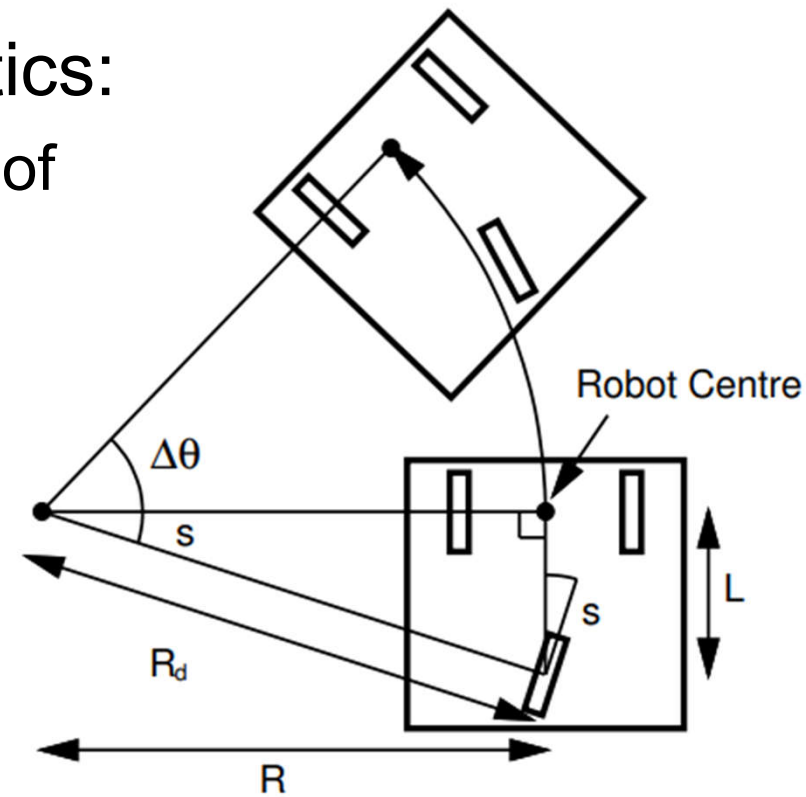

# Motion from Robot's View 7

- Ackerman inverse kinematics:
  - Given the desired moving radius and moving speed
  - $s = tan^{-1}\frac{L}{R} = \arctan\frac{L}{R}$
  - $\omega = \frac{\Delta\theta}{\Delta t} = \frac{v \sin s}{L}$
  - $v = \frac{\omega L}{\sin s} = \frac{\omega L}{\sin(\arctan\frac{L}{R})}$
    - Why get $v$ from $\omega$ ?
      - Hint: which is for wheel rotation
- $s$ and $v$ are for each of the motors: wheel direction and wheel rotation

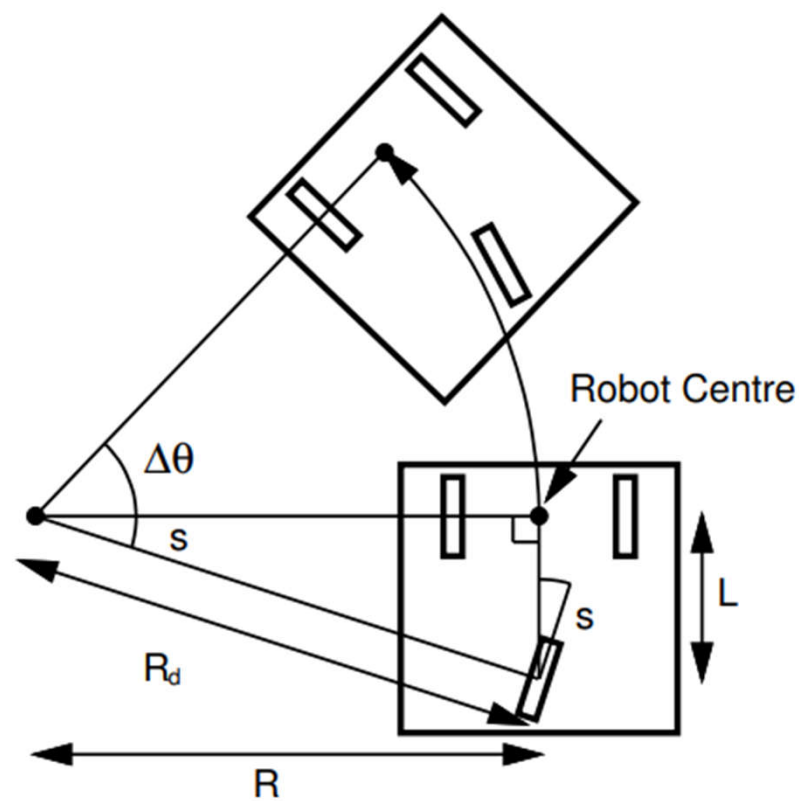

# Gearing 1

- DC motors typically have high speed and low torque, so gears are needed to deliver higher torque, as illustrated
  - Two gears share the same tangential force

$$\frac{t_1}{r_1} = F = \frac{t_2}{r_2}$$

  - The torque in Gear 2:

$$t_2 = r_2 F = \frac{r_2}{r_1} \cdot t_1$$

  - A small gear can drive a bigger gear, and can deliver a higher torque

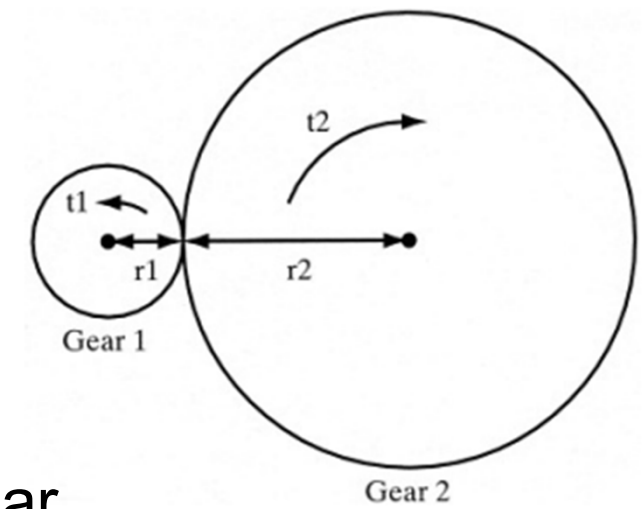

# Gearing 2

- DC motors typically have high speed and low torque, so gears are needed to deliver lower angular speed, as illustrated
  - Two gears share the same linear speed

$$v = \omega_1 r_1 = \omega_2 r_2$$

  - The angular velocity of the second gear:

$$\omega_2 = \frac{r_1}{r_2} \cdot \omega_1$$

  - A small gear can drive a bigger gear, and can deliver a lower angular speed

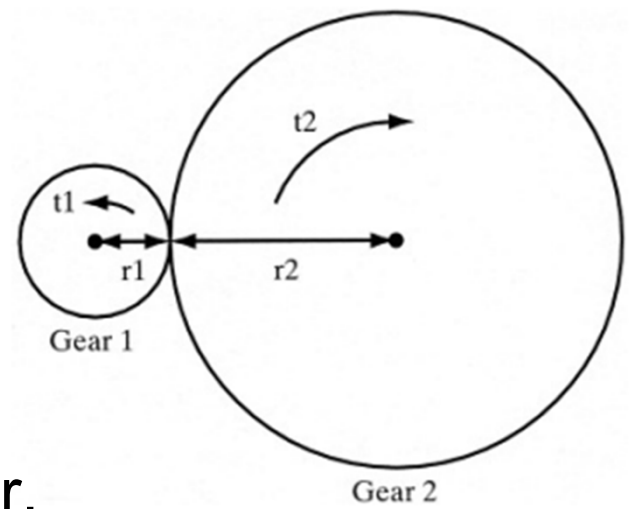

# Gearing 3

- The higher torque and lower angular velocity are in proportion to the ratio of teeth of the gears – gear ratio
  - From the examples with building instructions, you can get a better feeling of gear ratios
- In leJOS EV3
  - The `setSpeed(int speed)` method can be used to set the angular speed: degree per second
  - Then you can control the speed of your robot by this angular speed of the motor and gear settings
    - You must specify the "adjusted wheel diameter" based on your gear settings
    - How: engaged gears share the same linear speed

# Another Code Example 1

- **Example**: Ackerman, pp. 375 – 389 in the textbook
- Ackerbot.java
- In this example, the Ackerman steering robot has an asymmetrical steering arm
  - The build-in calibrateSteering() method can only work with a symmetrical robot
    - Same maximum steering threshold left and right
    - It rotates the wheels all the way in one direction until limiter switch, and it records the tachometer reading.
    - Then do the same to turn all the way in the other direction.
    - And thus get the center by the average of the readings.

# Another Code Example 2

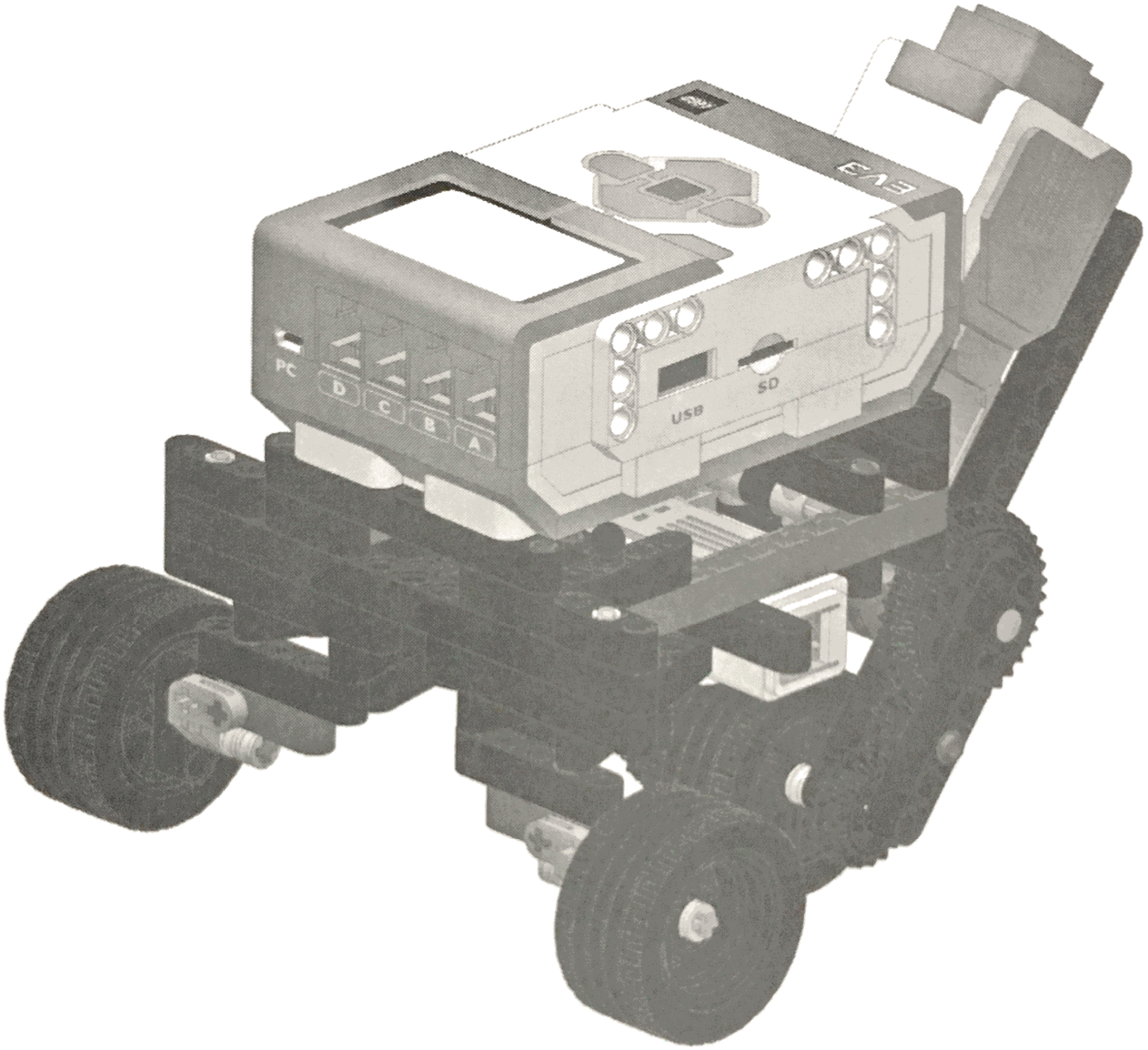

# Another Code Example 3

- In this example, the Ackerman steering robot has an asymmetrical steering arm (cont'd)
  - A workaround method: one turn to one direction and reset the tachometer + manual configuration of leftTurnTacho, rightTurnTacho, and minTurnRadius
  - But this still can't guarantee a perfect circle
    - Front wheels are turned passively: there would be skids on different surfaces
    - Initially it can't get an ideal calibration
    - During acceleration, the angles are different
      - But fixed angles here: slippage when start/stop
  - An approximate fix:
    - If the radius of the circle path is smaller than expected: try increasing the MIN_RADIUS until a complete lap

# Another Code Example 4

- Code snippets on gearing
  - `public static double GEAR_RATIO = 36.0/20.0;`
  - `// Multiply wheel size by gear ratio double size = SteeringPilot.WHEEL_SIZE_EV3 * GEAR_RATIO;`
  - Large gear: 36 teeth
  - Medium gear: 20 teeth
  - Small gear in the middle: it doesn't matter
  - A large gear drives a medium one

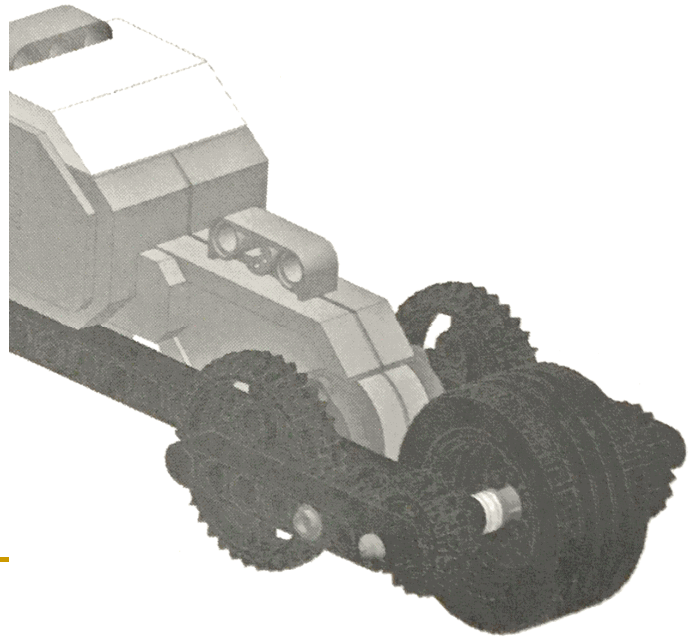

# Extension: Four-Wheel Ackerman 1

- Speeds of rear wheels are also different
  - A differential is needed
  - https://www.youtube.com/watch?v=SOgoejxzF8c
- In Lego EV3
  - There is no differential gear train, and only one rear wheel used
  - Angles of the front wheels should (but not?) change during the acceleration, because the targeted speeds can be reached immediately

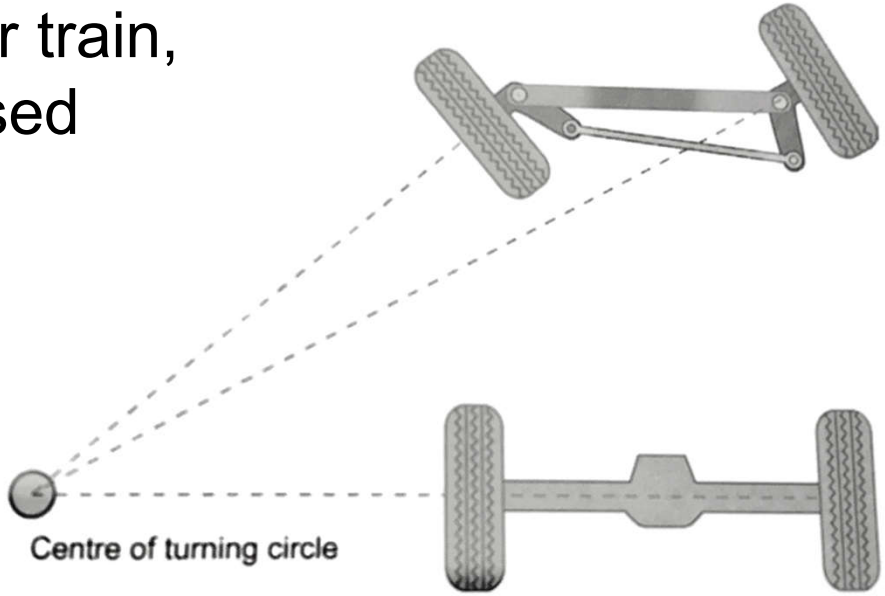

# Extension: Four-Wheel Ackerman 2

- $v_d$ is the desired speed
- $R = \frac{l}{\tan \varphi}$
- Rear Wheels
  - $v_{LR} = \frac{(R-d)\cdot v_d}{R}$
  - $v_{RR} = \frac{(R+d)\cdot v_d}{R}$
- Front Wheels
  - $v_{LF} = \frac{\sqrt{(R-d)^2+l^2}\cdot v_d}{R}$
  - $v_{RF} = \frac{\sqrt{(R+d)^2+l^2}\cdot v_d}{R}$

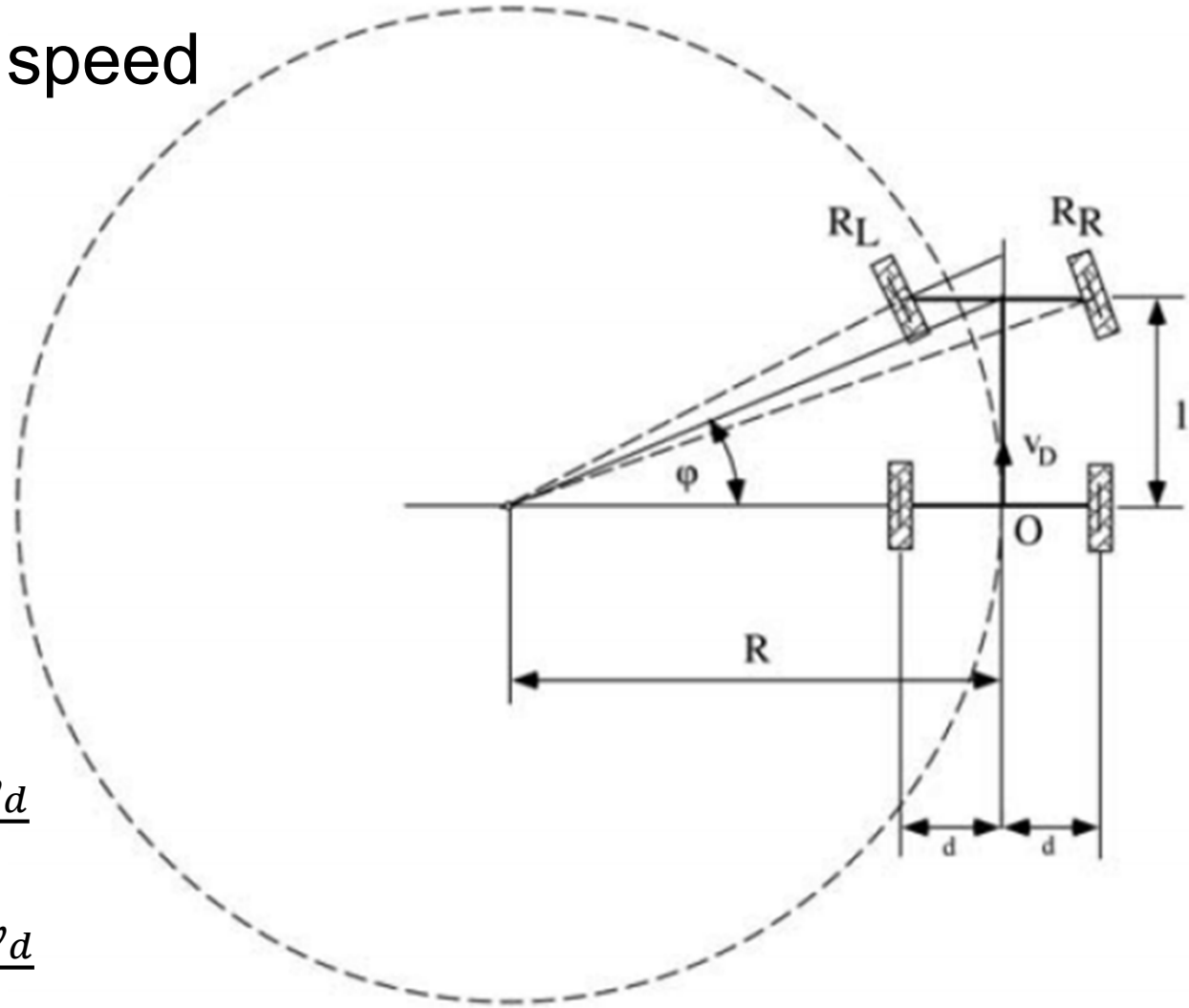

# Extension: Four-Wheel Ackerman 3

- Forward kinematics?
- Different rear wheels?
- How to “go to (40, 50, 90)”?
  - (40, 50) forms the coordinate
  - 90 is the heading angle
  - How to build a coordinate system?
  - Too many possible paths?