Introduction to Robotics: Localization Part 1 – Location

Shuai Zhang

Department of Computer Science
University of Central Oklahoma

Credit to the book Introduction to Autonomous Mobile Robots, by Roland Siegwart and Illah Nourbakhsh

Lecture Plan

- Introduction
- Coordinates
- Location In Movement
- Location From Sensing
- What’s next?

Introduction 1

- The image shows the chain of command on a ship
  - The pilot is a wheelman who steers the ship/robot
    - The actuator whose behavior should be linked to inverse kinematics, e.g. using differential steering to control the direction
  - Link to last chapter

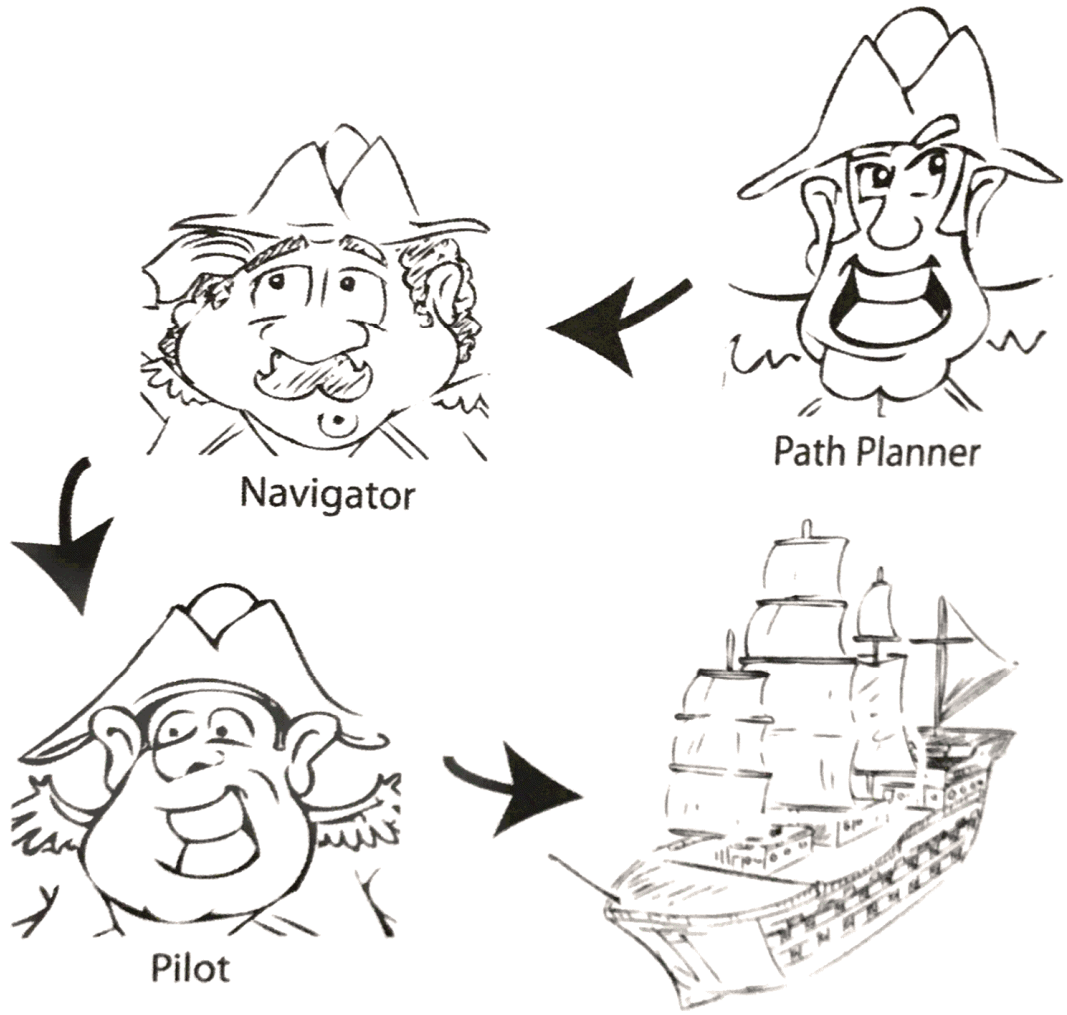

Introduction 2

- The chain of command
  - The navigator is a middle-man who is able to take instruction from the captain and then tell the pilot which moves to make in order to get from one location to another
  - Content of this chapter

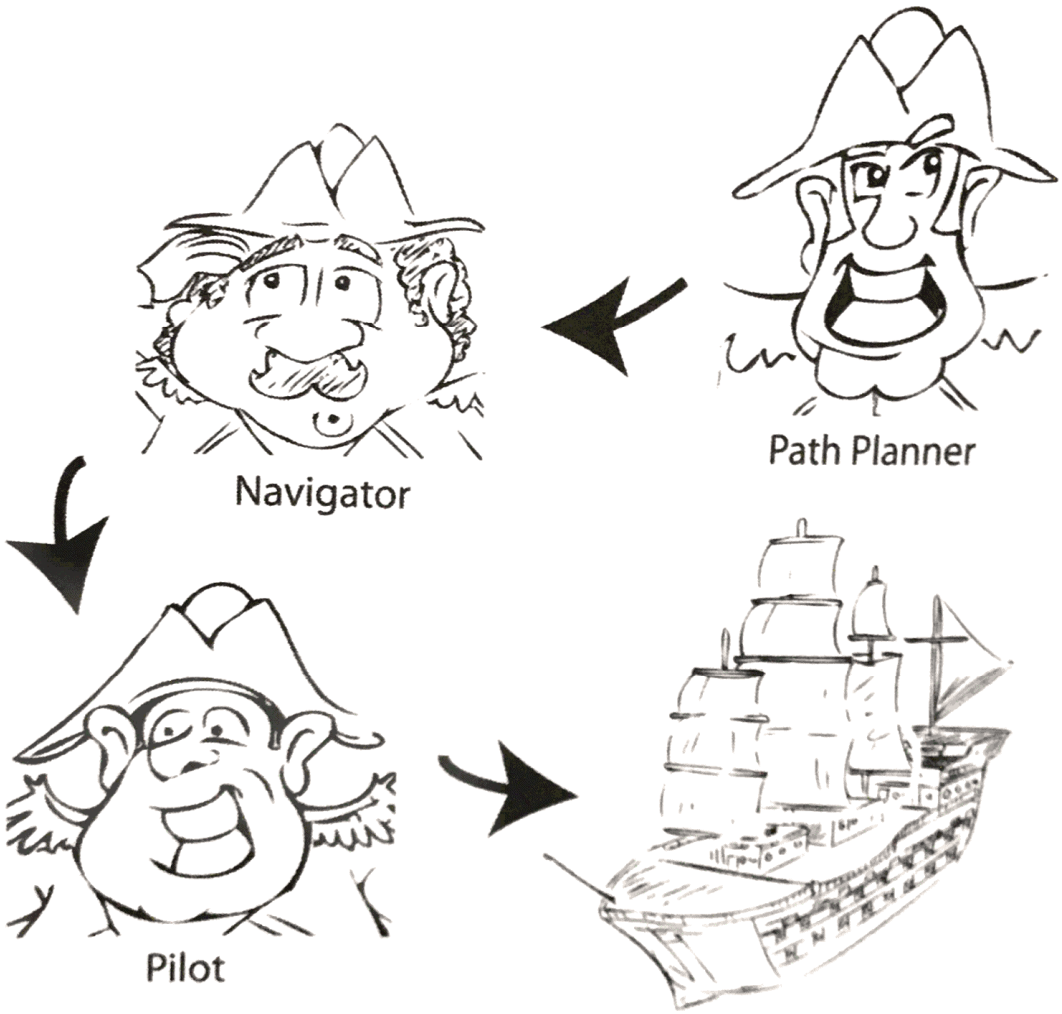

Introduction 3

- The chain of command
  - The path planner is usually the captain who plots a series of points that avoid dangerous obstacles, using map data.
    - For next chapter
  - But probably we can have the navigator plays a part in building the map.
    - Part of this chapter

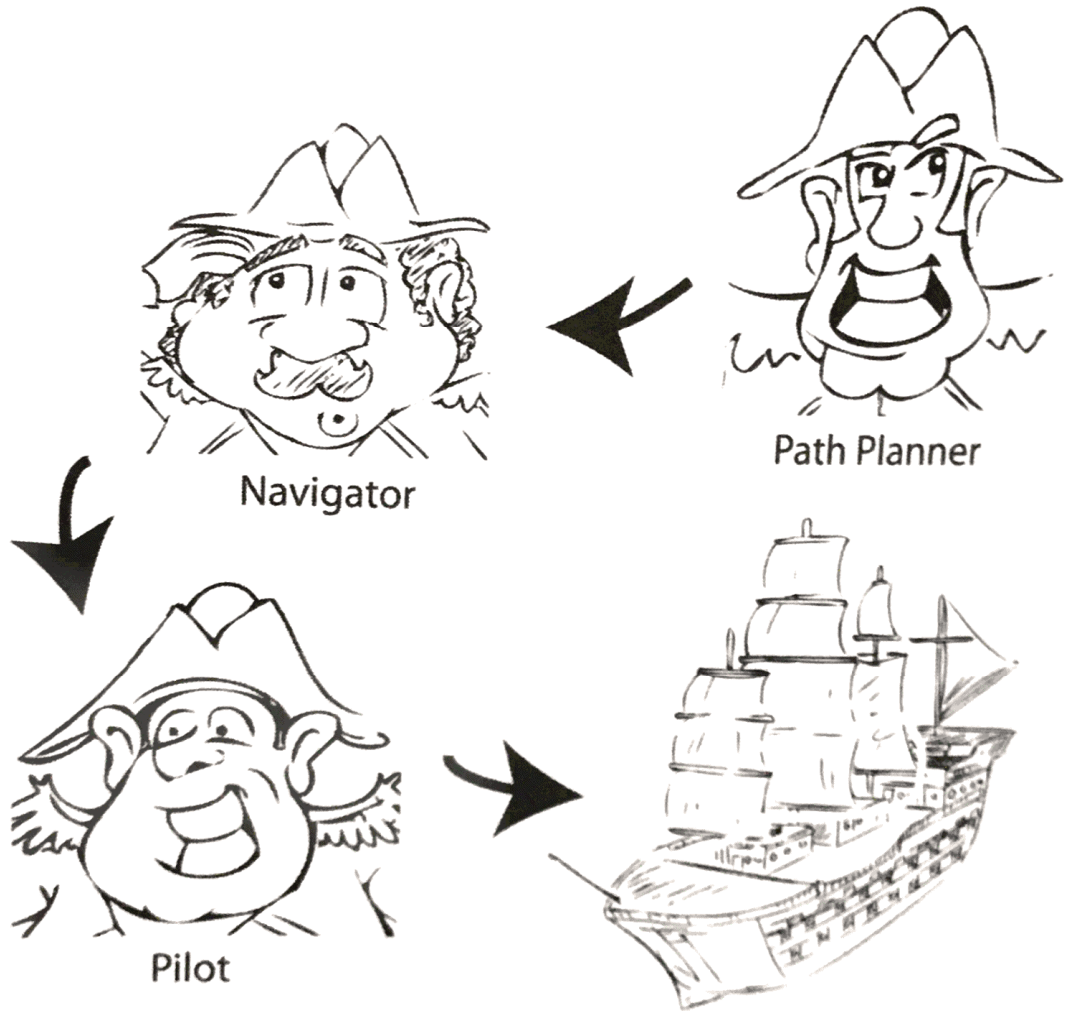

Coordinates 1

- The navigator keeps track of positions using a coordinate system
  - We will use a two-dimensional coordinate system
  - A coordinate can be represented by (x, y)
    - In leJOS EV3, this is modeled as a **Waypoint** https://lejos.sourceforge.io/ev3/docs/lejos/robotics/navigation/Waypoint.html
    - We can use two axes to divide the coordinate system into four quadrants
    - Can be illustrated by the image on next page
    - This is a Cartesian coordinate system
    - Rotations to the left (counter-clockwise) are positive

Coordinates 2

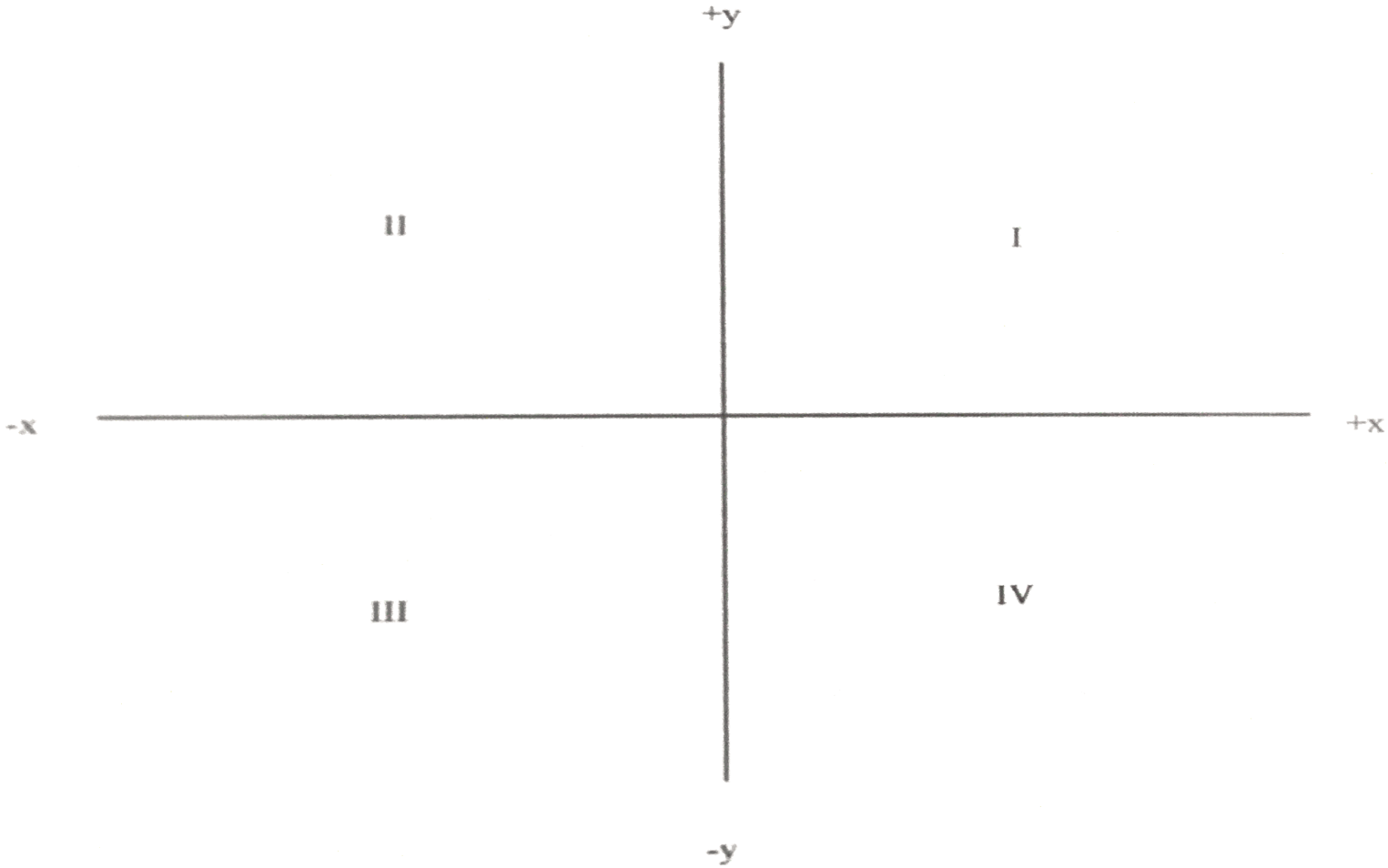

A Cartesian coordinate system

Coordinates 3

- In leJOS, we can do this like:

```
// We have used pilot in last chapter
Navigator nav = new Navigator (pilot);
Waypoint target = new Waypoint(100,200);
nav.goTo(target);
```

- For a robot, the heading direction is also important, so we may define a status in addition to a basic coordinate

```
Waypoint target = new Waypoint(100,200,90);
```

  - The third parameter is the heading direction

Location In Movement (Optional) 1

- We can model the robot into a Cartesian coordinate system
- We can describe the pose of the robot as a vector with these three elements:
  $\xi_I = [\, x \; y \; \theta \,]^T$

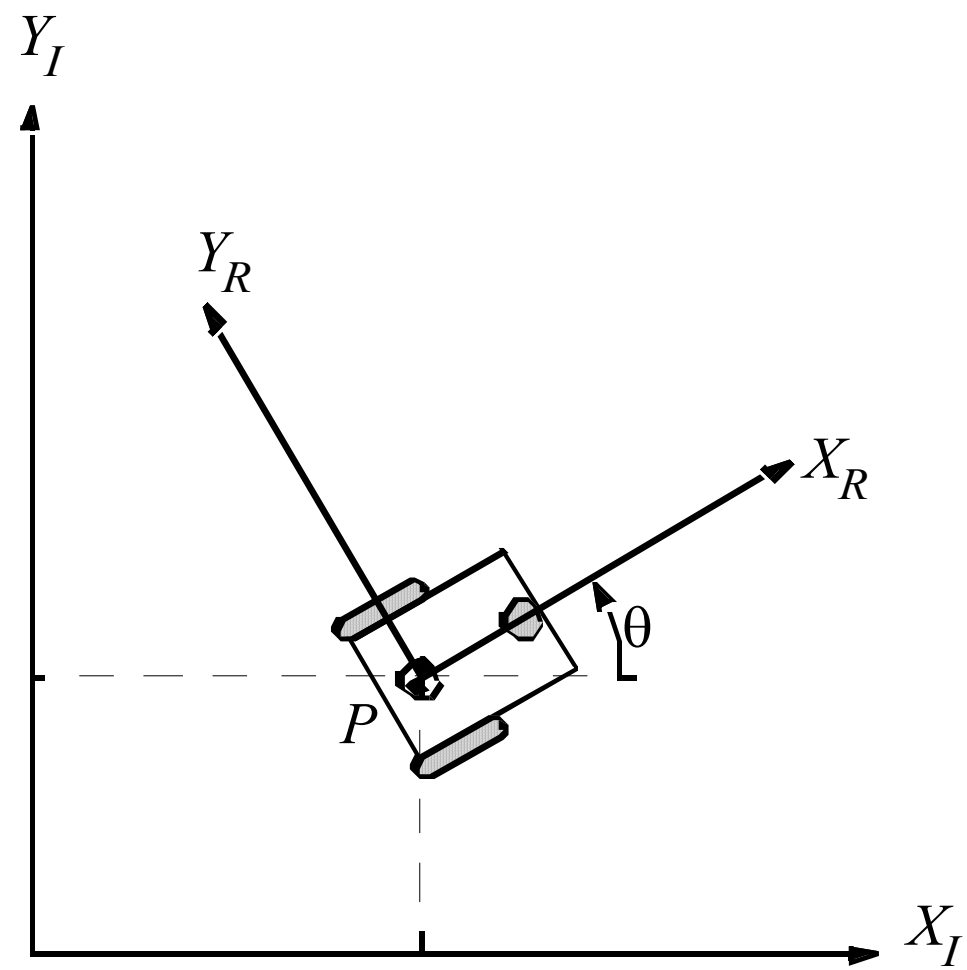

Location In Movement (Optional) 2

- Change from a pilot to a navigator
  - We need to change the coordinate system from local reference (pilot's view) to a global reference (navigator's view)
- This rotation operation is denoted by $R(\theta)\xi_I$:

$$\xi_R = R(\theta)\ \xi_I$$

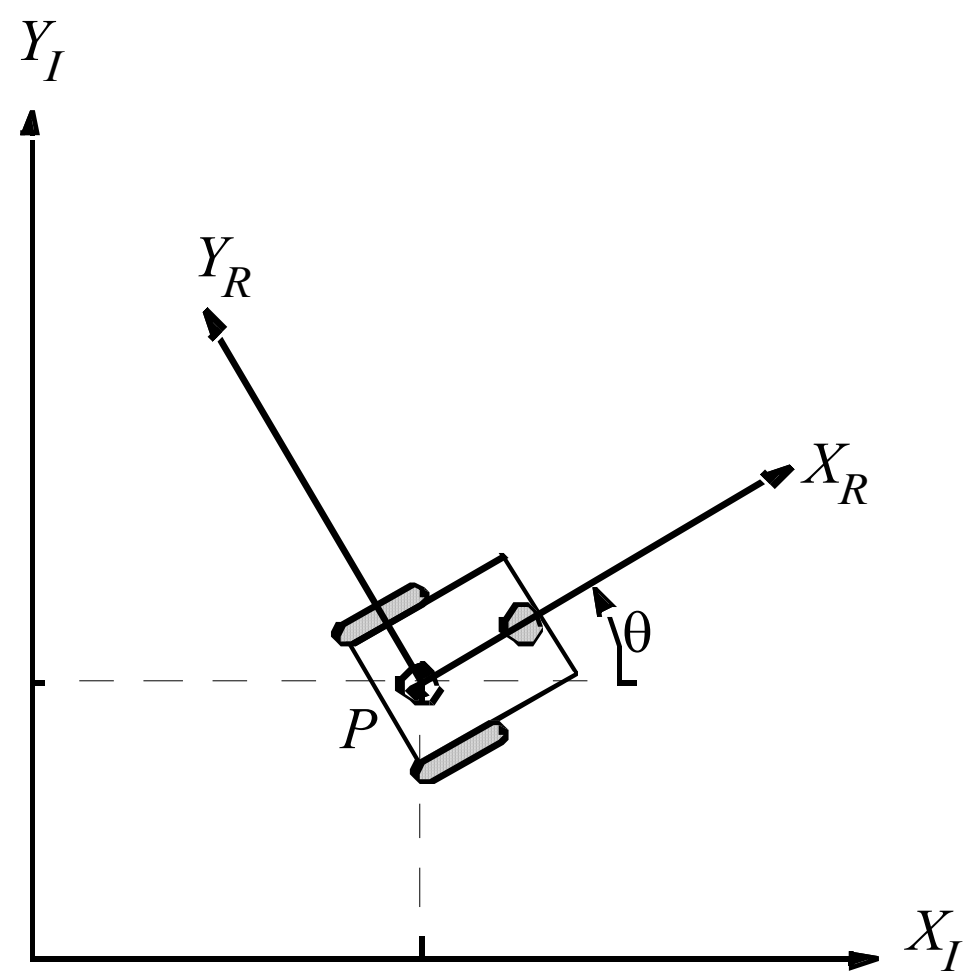

Location In Movement (Optional) 3

$$R(\theta)=\begin{bmatrix}\cos\theta & \sin\theta & 0\\ -\sin\theta & \cos\theta & 0\\ 0 & 0 & 1\end{bmatrix}$$

- Test on $\theta=\pi/2$:

$$R\left(\frac{\pi}{2}\right)=\begin{bmatrix}0 & 1 & 0\\ -1 & 0 & 0\\ 0 & 0 & 1\end{bmatrix}$$

$$\dot{\xi}_R=R\left(\frac{\pi}{2}\right)\dot{\xi}_I=\begin{bmatrix}0 & 1 & 0\\ -1 & 0 & 0\\ 0 & 0 & 1\end{bmatrix}\begin{bmatrix}\dot{x}\\ \dot{y}\\ \dot{\theta}\end{bmatrix}$$

$$=\begin{bmatrix}\dot{y}\\ -\dot{x}\\ \dot{\theta}\end{bmatrix}$$

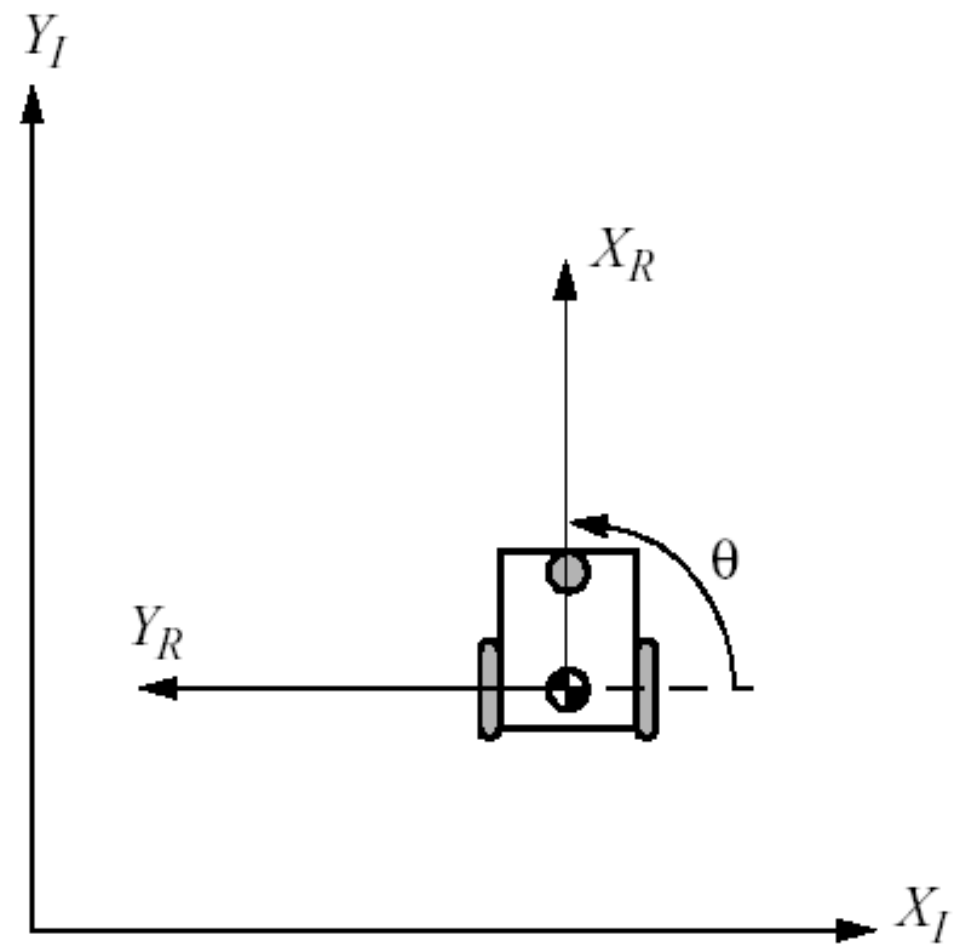

Location In Movement (Optional) 4

- We can compute a robot's motion in the global reference from the motion in its local reference:

$$\xi_I = R(\theta)^{-1}\xi_R$$

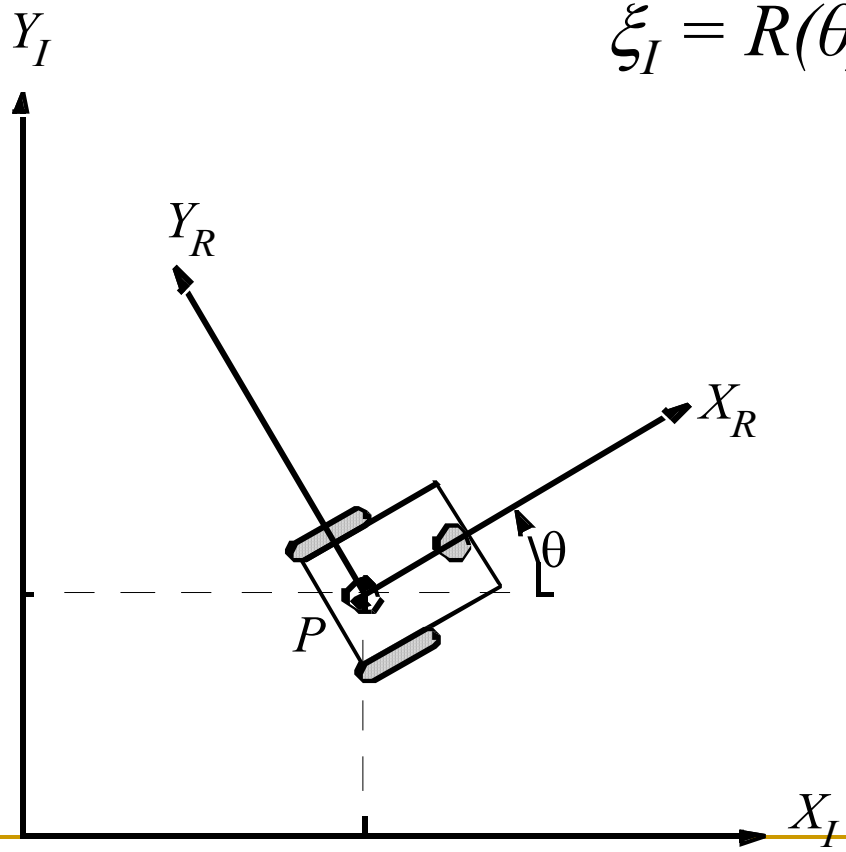

How to find a solution from two wheels?

Location In Movement (Optional) 5

- First compute the contribution of each of the two wheels in the local reference

$$\dot{x}_{r1} = \frac{r\dot{\varphi}_1}{2} \qquad \dot{x}_{r2} = \frac{r\dot{\varphi}_2}{2}$$

- Then convert these to the global reference
  - The total translation speed at P is given as

$$\dot{x}_R = \dot{x}_{r1} + \dot{x}_{r2}$$

  - The speed $\dot{y}_R$ is even easier as it must always be zero

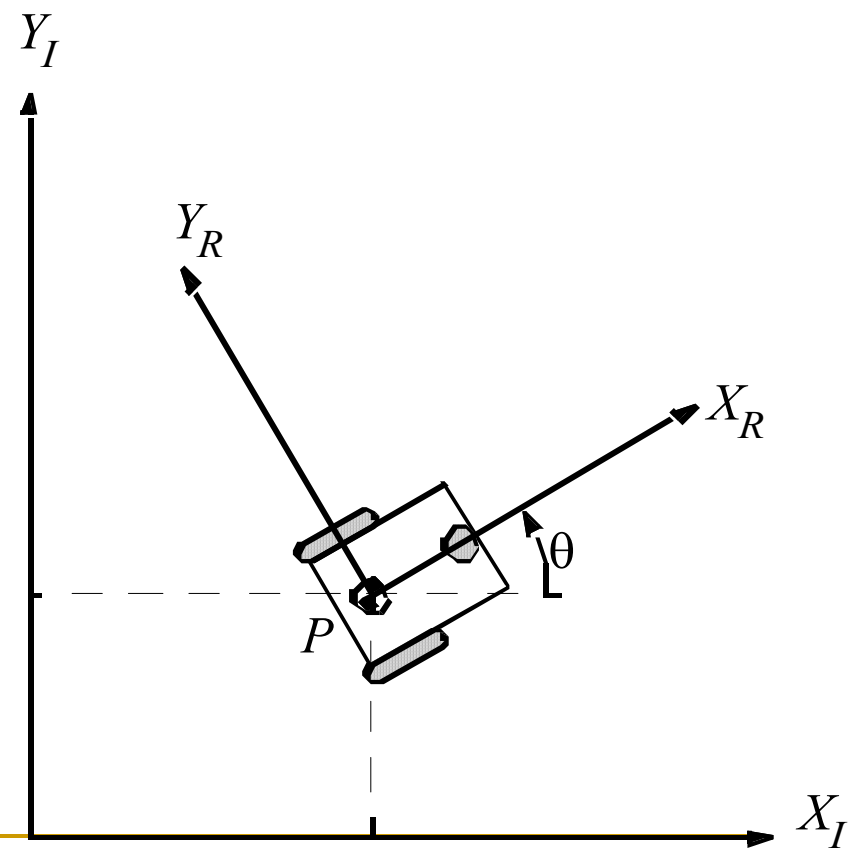

Location In Movement (Optional) 6

- The contribution of each wheel's spinning speed to the rotation speed at P is given as:

$$\omega_1 = \frac{r\dot{\varphi}_1}{2l}$$

$$\omega_2 = \frac{-r\dot{\varphi}_2}{2l}$$

- The total rotation speed at P is given as:

$$\dot{\theta}_R = \omega_1 + \omega_2$$

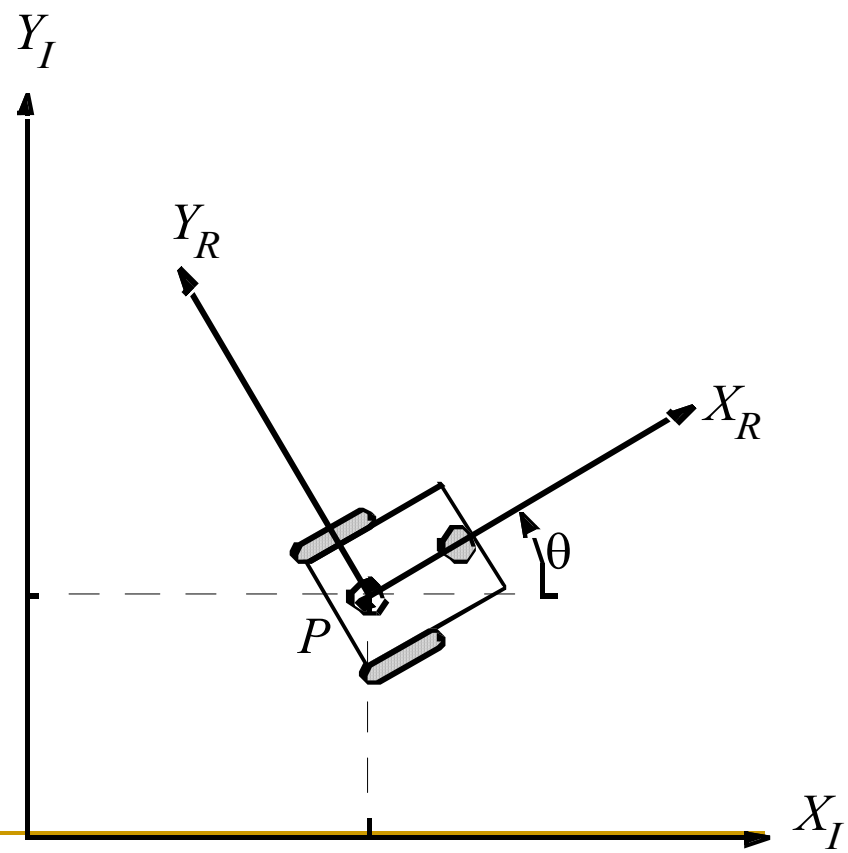

Location In Movement (Optional) 7

- Combining the individual formulas yields a kinematic model for a differential drive robot as:

$$\dot{\xi}_I = R(\theta)^{-1}\begin{bmatrix} \frac{r\dot{\varphi}_1}{2} + \frac{r\dot{\varphi}_2}{2} \\ 0 \\ \frac{r\dot{\varphi}_1}{2l} + \frac{-r\dot{\varphi}_2}{2l} \end{bmatrix}$$

$$R(\theta)^{-1} = \begin{bmatrix} \cos\theta & -\sin\theta & 0 \\ \sin\theta & \cos\theta & 0 \\ 0 & 0 & 1 \end{bmatrix}$$

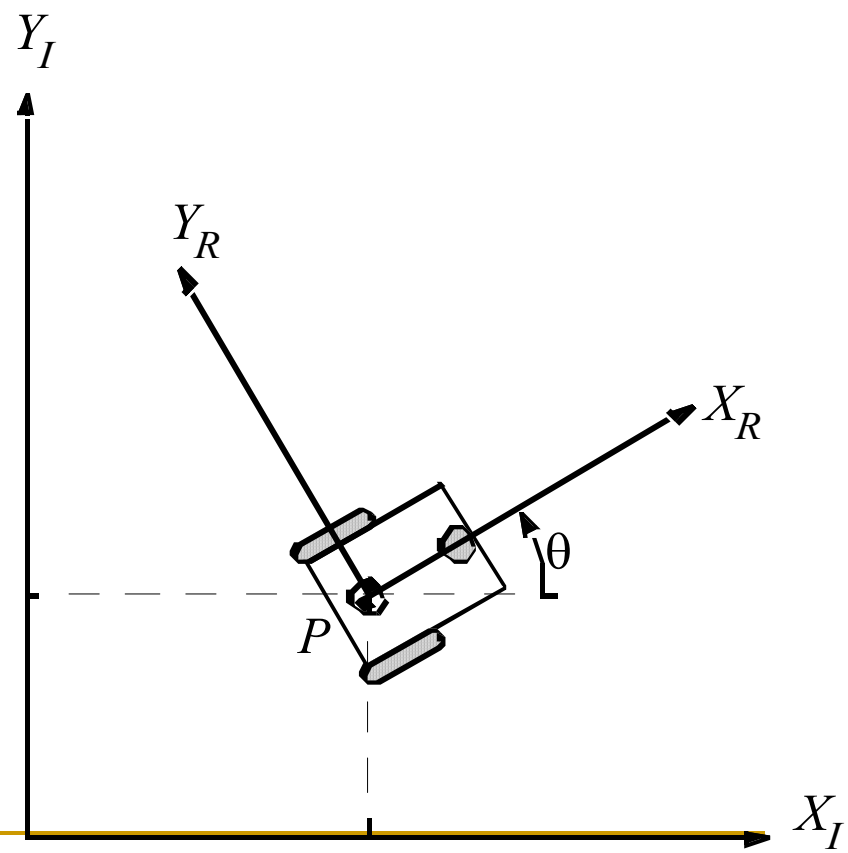

Location In Movement (Optional) 8

- Example: Suppose the robot is positioned such that $\theta = \pi/2$, $r = 1$, and $l = 1$ and the robot engages its wheels unevenly with $\varphi_1 = 4$ and $\varphi_2 = 2$
- We can compute the velocity in the global reference frame as:

$$\dot{\xi}_I = \begin{bmatrix} \dot{x} \\ \dot{y} \\ \dot{\theta} \end{bmatrix} = \begin{bmatrix} 0 & -1 & 0 \\ 1 & 0 & 0 \\ 0 & 0 & 1 \end{bmatrix} \begin{bmatrix} 3 \\ 0 \\ 1 \end{bmatrix} = \begin{bmatrix} 0 \\ 3 \\ 1 \end{bmatrix}$$

Location In Movement (Optional) 9

- With global velocity, we can calculate the global location, using what we learned in math
  - Get the result based on differential equations
  - Numerical methods for ordinary differential equations https://en.wikipedia.org/wiki/Numerical_methods_for_ordinary_differential_equations

Location From Sensing 1

- In Chapter 1, we have mentioned the uncertainty in sensor and actuator

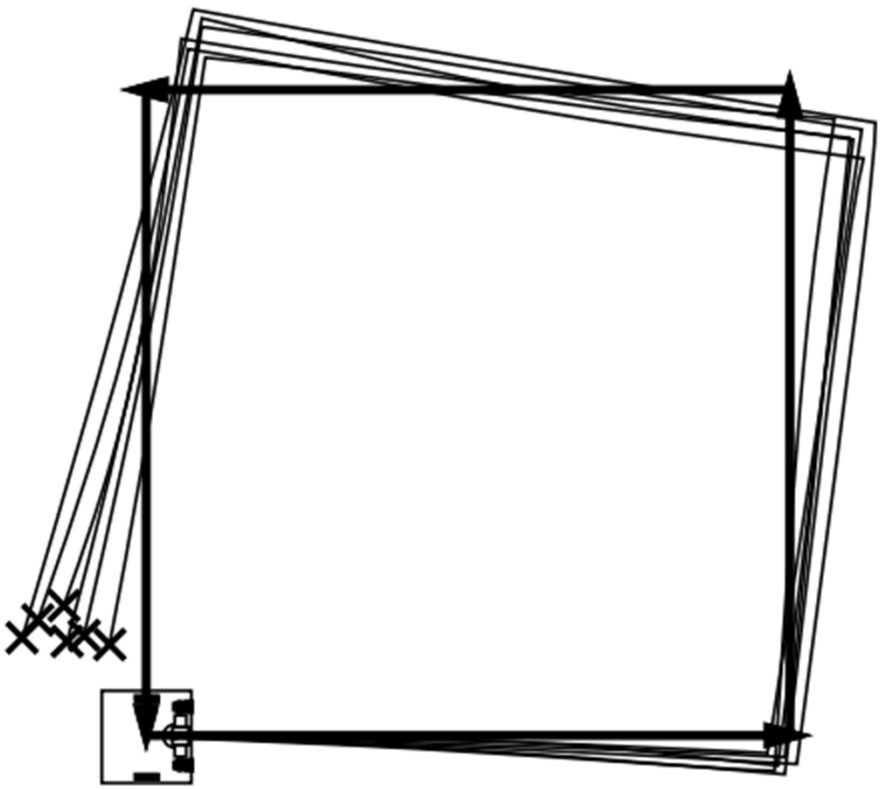

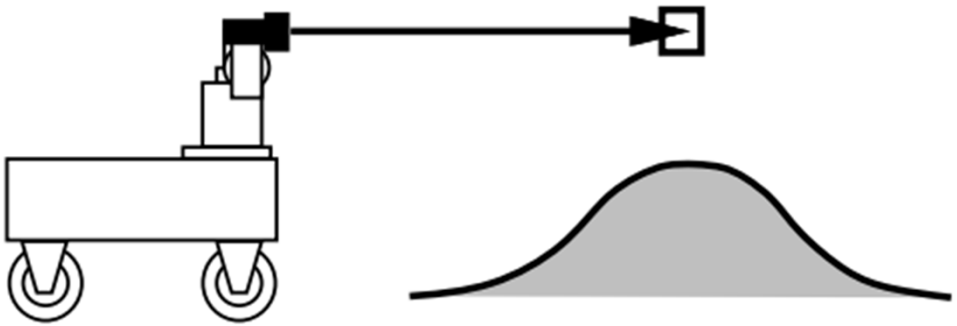

Location From Sensing 2

- Because of the uncertainty from the observed data readings, the action/measurement won't be 100% accurate
- We need to work on uncertainty estimate

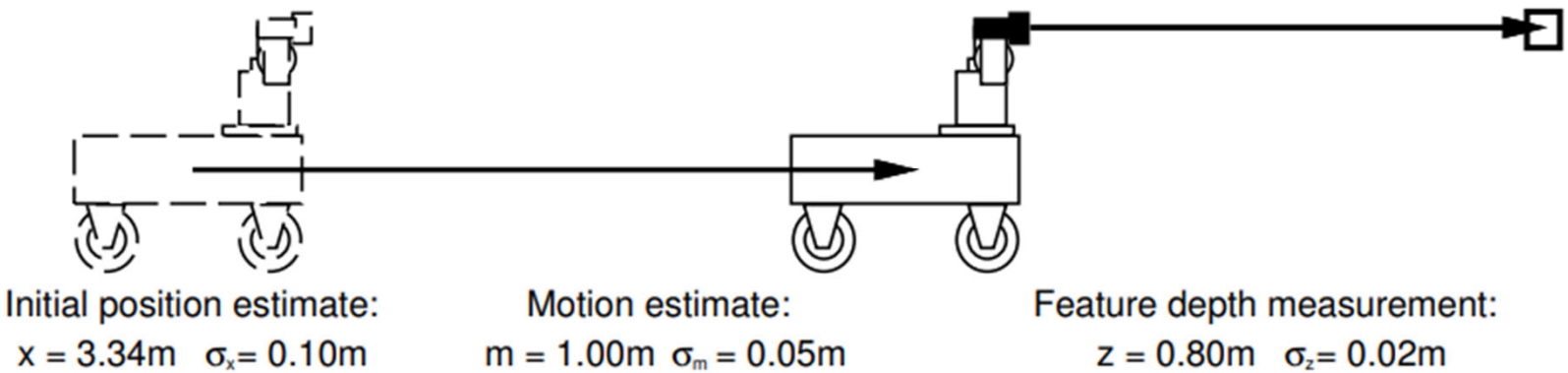

Location From Sensing 3

- A widely used method is the Bayesian Probabilistic analysis, to describe the probability of the robot state: from observation (O) to fact (F)
  - $P(F|O) = \frac{P(O|F)P(F)}{P(O)}$
  - $P(F)$ is prior
  - $P(O|F)$ is likelihood
  - $P(F|O)$ is posterior

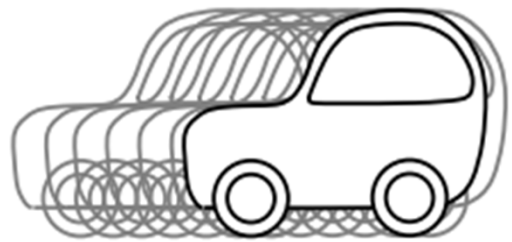

Location From Sensing 4

- Probabilistic inference

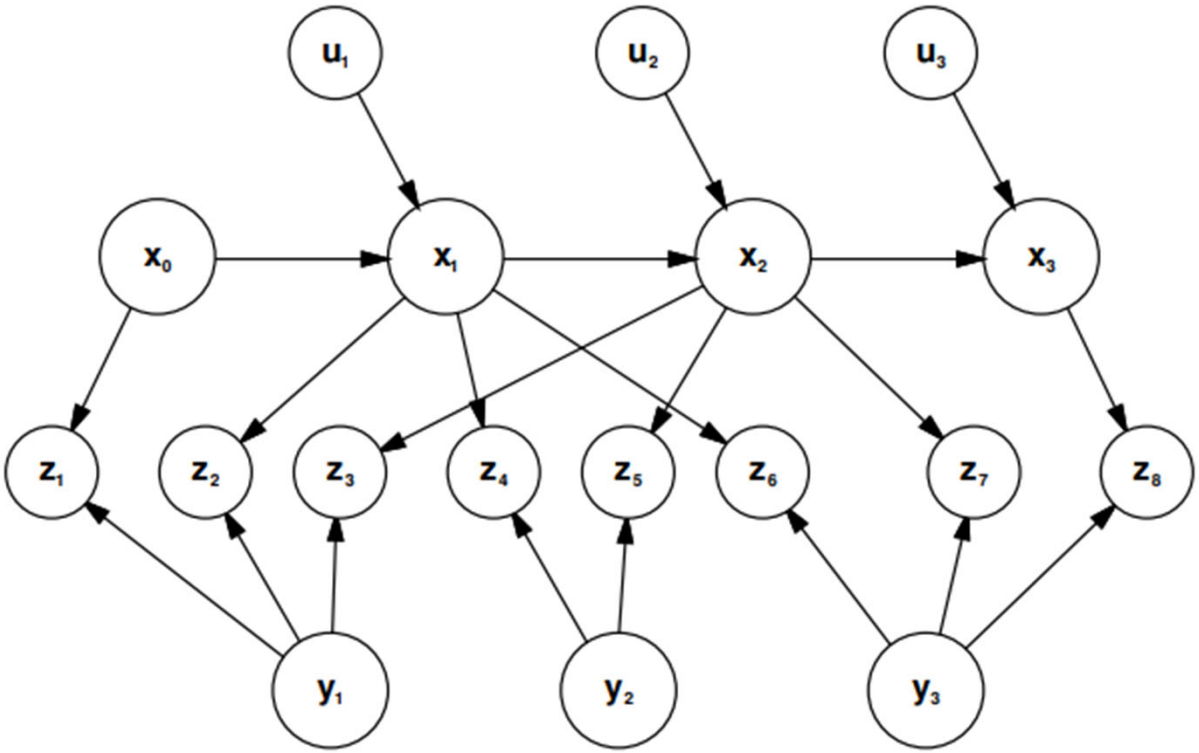

  - If you are interested: probabilistic robotics https://dl.acm.org/doi/fullHtml/10.1145/504729.504754?casa_token=FERSoeCLTSYAAAAA:49cvBiTpS1hTKSrG1Nt5Rc7TGEWf_xJbl6yZkHD6ZKRYqab4I5O5JrhazpHqIph9S4UBzxuZHZrmEg#UF1

Note

- From this lecture, we can see
  - Robotics is an inter-discipline area
  - We will focus on computer science aspect
  - The math parts are left for your exploration if you are interested
    - We are just expanding your vision

What's next? 1

- How to handle growth of uncertainty?

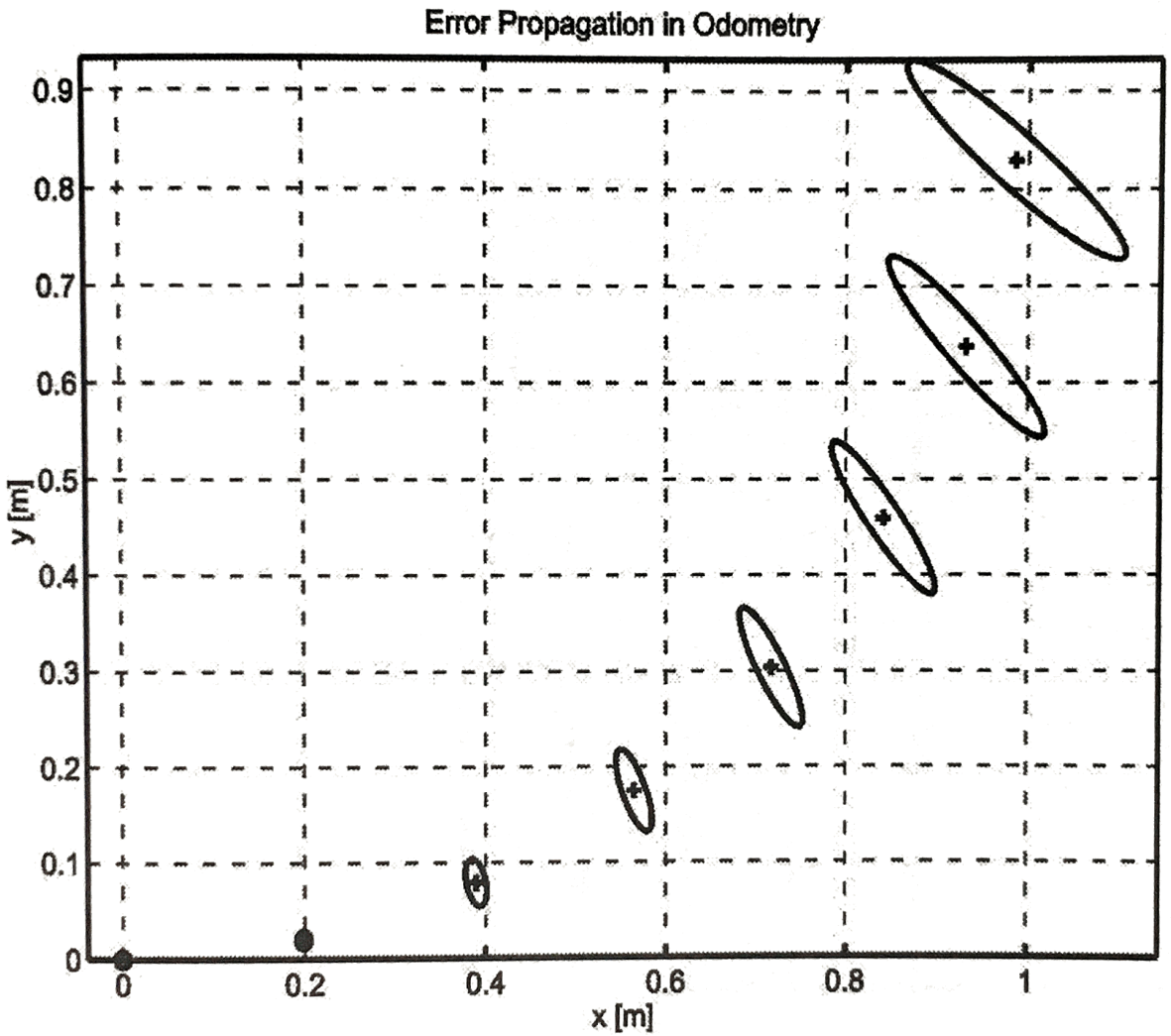

What's next? 2
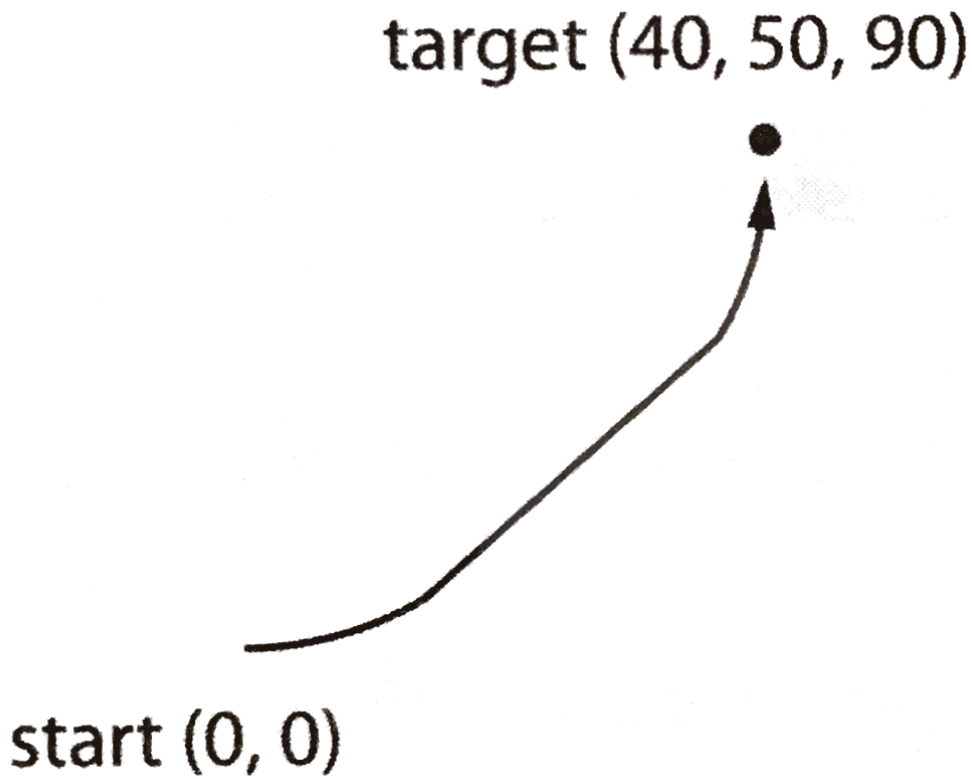
- How to find a good path for a coordinate?