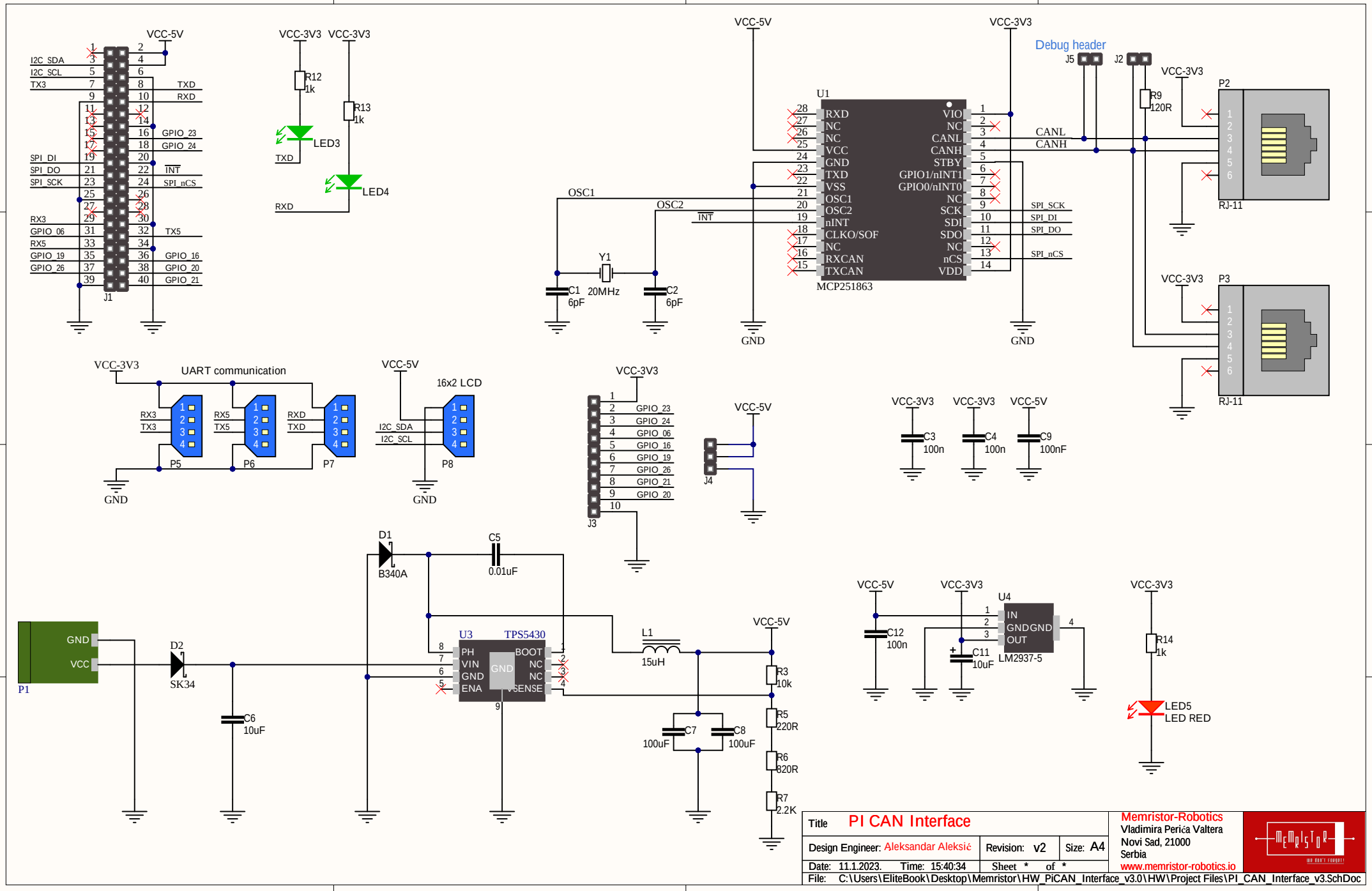
J1
VCC-5V
I2C_SDA
I2C_SCL
TX3
TXD
RXD
GPIO_23
GPIO_24
SPI_DI
SPI_DO
SPI_SCK
INT
SPI_nCS
RX3
GPIO_06
TX5
RX5
GPIO_19
GPIO_16
GPIO_26
GPIO_20
GPIO_21
VCC-3V3
R12
1k
R13
1k
LED3
LED4
U1
MCP251863
RXD
NC
CANL
CANH
VCC
GND
TXD
VSS
OSC1
OSC2
nINT
CLKO/SOF
RXCAN
TXCAN
VIO
STBY
GPIO1/nINT1
GPIO0/nINT0
SCK
SDI
SDO
nCS
VDD
Y1
20MHz
C1
6pF
C2
6pF
Debug header
J5
J2
R9
120R
P2
P3
RJ-11
UART communication
P5
P6
P7
16x2 LCD
P8
J3
J4
C3
100n
C4
100n
C9
100nF
D1
B340A
C5
0.01uF
P1
GND
VCC
D2
SK34
C6
10uF
U3
TPS5430
PH
VIN
ENA
BOOT
SENSE
L1
15uH
R3
10k
R5
220R
R6
820R
R7
2.2K
C7
100uF
C8
100uF
U4
LM2937-5
IN
OUT
C12
100n
C11
10uF
R14
1k
LED5
LED RED
Title
PI CAN Interface
Design Engineer: Aleksandar Aleksić
Revision: v2
Size: A4
Date: 11.1.2023.
Time: 15:40:34
Sheet * of *
File: C:\Users\EliteBook\Desktop\Memristor\HW_PiCAN_Interface_v3.0\HW\Project Files\PI_CAN_Interface_v3.SchDoc
Memristor-Robotics
Vladimira Perića Valtera
Novi Sad, 21000
Serbia
www.memristor-robotics.io