Cristal

FEUP Academic Solar Team

Work Documentation - Ivo Mendes

Electrical Systems Department

FEUP Academic Solar Team 2026

FAST

FEUP ACADEMIC SOLAR TEAM

0.1. Electrical Architecture Overview

FAST is a student project at Faculdade de Engenharia da Universidade do Porto (FEUP), bringing together students from various engineering degrees with the goal of merging innovation and sustainability. The team develops a solar-powered autonomous vessel built to compete in European university competitions.

As a member of the Electrical Systems Department, I am responsible for the interface between the vessel's power systems and its autonomous hardware. The diagram presented in the Figure 1 represents the full electrical power and distribution architecture of the vessel, which I was responsible for designing, dimensioning, and validating.

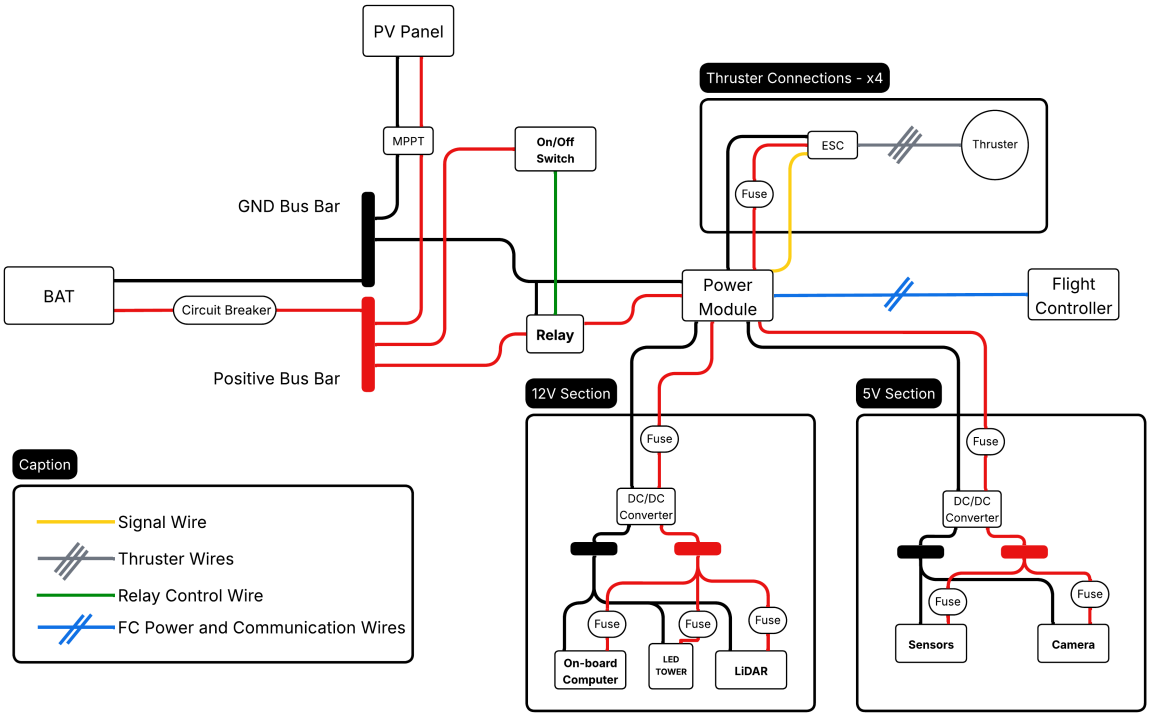

Figure 1: Electrical Wiring Diagram

The diagram above illustrates the separation between the high-power domains (the four thrusters) and the low-power domains (sensors, computer, camera, etc.). To ensure protection and safe operation, each component has its own fuse to prevent short circuits (or even worse situations); in addition, a relay and an on/off switch will function as a physical "emergency switch," as required by competition rules.

Two key challenges shaped the design decisions reflected in this architecture. The first was ensuring supply reliability across the onboard computer, sensors, and autonomous hardware in a way that prevents faults, unexpected reboots, and power blackouts during operation, particularly in the demanding conditions of open-water testing. The second was building a modular system that allows for straightforward maintenance and reconfiguration both before and during competition, where time and access are limited.

These constraints pushed me to develop practical skills in component selection, electrical dimensioning, and hardware-in-the-loop validation in a real maritime environment.