Panasonic

Ver. 2011.0515

Specification

【 Electronic Component Mounting System 】

High-speed Axial Lead
Component Insertion Machine

Model ID : AV131

Model No. : NM-EJA2A
NM-EJA3A

Panasonic Factory Solutions Co., Ltd.

Cautions Regarding These Specifications

Please note the following points.

1. This document may not be copied or reproduced in part or in total, without permission.

2. Due to improvements to the machine and software, the specifications may change without notice.

3. If there are any questions regarding the content of this document, please contact us.

4. Please use the machinery and software with full understanding of its specifications and limitations. We do not assume responsibility for damages resulting from improper use.

5. Some of our products fall under the export control items (or technologies) established in the Foreign Exchange and Foreign Trade Act.
   When exporting (or providing technologies overseas), please check its legal restrictions and be sure to take necessary procedures such as to obtain the export permission.

6. This machinery may come under U.S. government re-export regulations.
   When moving the machinery outside of Japan, apply for the necessary export permission from the U.S. government in advance.

7. Products without complying with Machinery Directive or EMC Directive are not allowed to carry into or sell in EU countries.

8. Technical information in this document is provided only as a guide for the major operation and applications of the products.
   No responsibility is assumed by our company for any infringements of intellectual property or other rights of ours or any third parties which may result from its use.
   No license is granted by implication or otherwise under any patent or patent rights of our company or others.
   We reserve any industrial property rights such as patents, copyrights, and other intangible property rights relating to our products, which are developed and manufactured by customers' request or information.

9. 'Microsoft' and 'Windows' are trademarks of Microsoft Corporation, registered in the U.S. and other countries.

10. As the manufacturer of this system, we do not assume responsibility for defective products or costs incurred as a result of improper operation.

11. When reselling or moving this equipment, please make sure to contact us, our sales subsidiaries or agents.

12. The contents of this document are valid as of May 15, 2011.

⚠ Precautions for Safe Use	
● Thoroughly read the instruction manual and use the machine only as directed.	● The machine described in this Specification is an industrial machine. Confirm the operation requirements described in the separate instruction manuals. Regarding machine installation, operation and maintenance, and handling of necessary materials, the local laws and requirements may be applied. ● Before carrying out the operation and maintenance of this machine, confirm the descriptions in the separate instruction manuals and warning information attached on this machine regardless of the operating condition of this machine. Ignoring safety functions might cause injury, electric shock or machine trouble.

Revision History

This document content is based on the version of the last date printed below.

Revision date	Version	Revised page	Revisions
2007.11.20	Ver. 2007.1120	—	First edition
2008.01.17	Ver. 2008.0117	P.30	Correction of the accessories
2008.09.15	Ver. 2008.0915	P. 32, 34	Addition of explanations of option specifications
2010.03.15	Ver. 2010.0315	P. 5, 6	Deletion of FDD support in data I/O.
2011.02.01	Ver. 2011.0201	P. 31, 32	・Enlargement of insertion PCB size ・2 PCB transfer Additional Options
2011.05.15	Ver. 2011.0515	P. 34	Addition of options (SMEMA (A), SMEMA (B))

Contents

1. General Description 1
2. Features 1
3. Machine Specifications 6
3.1 Standard Specifications 6
3.2 Standard Functions 7
4. Machine Configuration 9
4.1 Overall Drawing 9
4.2 Tape Cutting Unit with Dampers 10
4.3 Insertion Unit 10
4.4 Vertical Feeder 11
4.5 Separate Feeder Carriage (For NM-EJA3A only) 12
4.6 Feeder Carriage Configuration (NM-EJA3A) 13
4.7 Feeder Carriage Configuration (NM-EJA2A) 15
4.8 Example of Feeder Carriage Configuration (NM-EJA2A) 15
4.9 PCB Recognition Offset Function 17
5. Component Specifications 20
5.1 Axial Lead Component Taping Specifications 20
5.2 Applicable Insertion Components 21
5.3 Taping Component Packaging 22
5.4 Jumper Wire Specifications 23
6. PCB Requirements and Restrictions 24
6.1 PCB Specifications 24
6.2 PCB Condition before Placement 24
6.3 PCB Accuracy 25
6.4 Dead Space around Positioning Pin and on the PCB Edge 26
6.5 Insertion Tooling Dead Space 27
6.6 Calculations of Necessary Space between Adjacent Components 28
7. Standard Functions 29
7.1 Programming Functions 29
7.2 3-Color Signal Tower 29
8. Standard Machine Configuration 30
9. Option 31
10. Paint Color 35
11. Safety devices 36
12. Electric / Pneumatic 38
12.1 Electric Source Unit 38
12.2 Pneumatic Source Unit 38
13. Dimensions 39
13.1 Pneumatic/Electric Source Input Position (NM-EJA3A) 39
13.2 Adjustment Bolt Diagram (NM-EJA3A) 39
13.3 Pneumatic/Electric Source Input Position (NM-EJA2A) 40
13.4 Adjustment Bolt Diagram (NM-EJA2A) 40

1. General Description

The AV131 can insert axial lead components and jumper wires at an insertion tact of 0.12 s/component and can realize the lowest insertion cost in the industry.

■ **High productivity ***

1. The highest throughput in the industry
   - Insertion tact of 0.12 s/component.
   - The lightweight and rigid XY table realizes high-speed insertion.
2. Productivity improved by eliminating production loss time
   - The small and lightweight insertion units and direct drive system enable the high-speed rotation of insertion units.

   For example, compared with 15 years ago, the productivity is improve: about 4-fold insertion tact and about 5.3-fold area productivity. (Compared with our AVB)

■ **High reliability ***

1. Longer life span of consumable parts
   - The tape cutter and lead cutter (fixed) are made reversible.
2. Improved reliability of the main units
   - The longer life span of the cable is achieves by routing the flat cable so that it draws an arc in the head unit or the anvil rotation unit., reducing cable stress.
   - The direct drive of the hollow-body motor eliminate the belt system used for rotating the insertion head.

■ **Flexibility ***

1. The standardized insertion unit does not need switchover.
2. The swing type bending die makes it possible to handle a lead of 0.4 mm to 0.8 mm diameter and insertion pitch of 5 mm to 26 mm per tool, improving flexibility.

■ **Improved operability and maintainability ***

1. Three-language display (Japanese, English, Chinese)
   - Language to be displayed can be selected easily on the monitor.
2. Global transformer
   - The built-in global transformer comes with selectable voltage setting of 200, 220, 380, 400, 420 and 480 V, an external transformer becomes unnecessary.
3. Standardization of recommended spare parts
   - The recommended spare parts used for previous machines (AVK series) can be used for the AV131. (Note: Excluding the lead cutter (fixed))

2. Features

*High productivity **

Insertion tact time

Improvement in productivity is realized by the fastest insertion of 0.12 s/component in the industry.

* Specifications common to AVK3

High-speed XY table

The lightweight and rigid XY table enhances the speed.

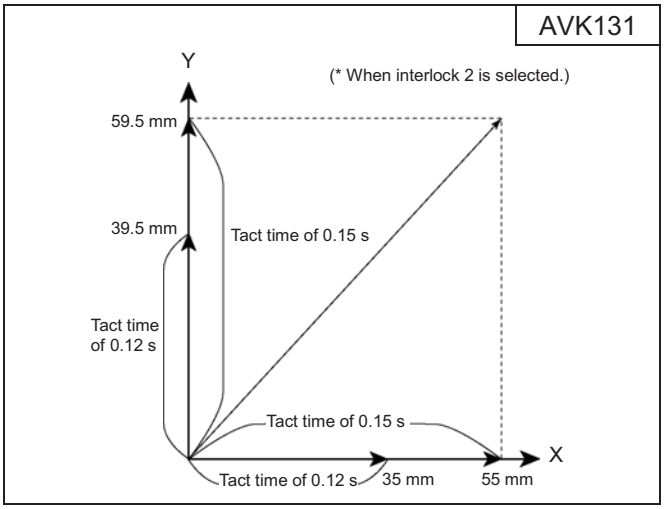

4-direction insertion tact time

The small and lightweight insertion units and direct drive system of the hollow-body motor provide the high-speed rotation of insertion units.

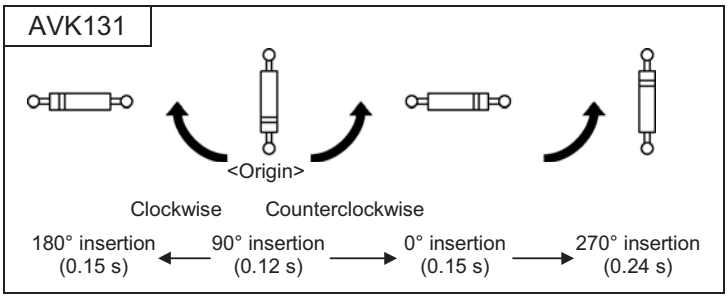

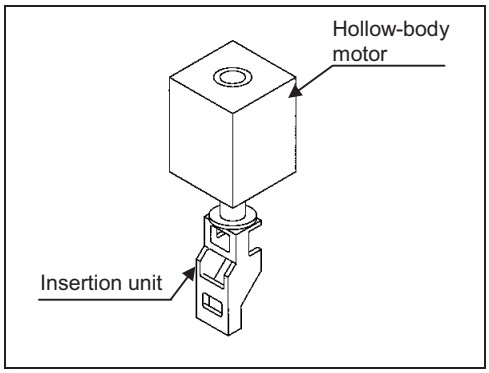

Direct drive system

2-separate component supply unit (For NM-EJA3A only)

The operation conditions can be selected according to the production type enable significant reduction of loss time for component replenishment, preparation and operation.
(5 modes of operation conditions)

Random access system

An insertion error can be corrected with the touch of the button, and the machine can recover from an insertion error immediately.

*High reliability **

Longer life span of consumable parts

- The tape cutter and lead cutter (fixed) are made reversible.
- The ultra-rigid materials are used for the insertion guide and pusher to realize the longer life span.

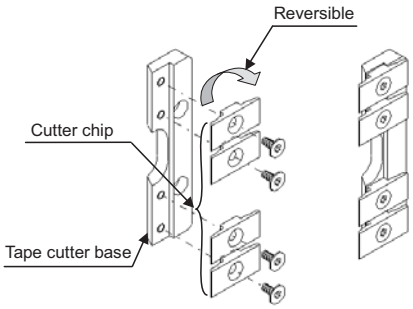

Longer life span of Flat cable

The longer life span of the cable can be achieved by routing the flat cable so that it draws an arc in the head unit or the anvil rotation unit. , reducing cable stress.

Flat cable (two-conductor) that is routed so that it draws an arc

Centering function

This function is to correct the offset of electronic component.
This realizes high reliable insertion by preventing interference between an electronic component and the insertion pusher, if the electronic component is taped off-center.

Tape cutting unit with dampers

A damper of 2.5 mm provided on each side of the tape cutter (5.0 mm on both sides) reduces damages to the cutter blades if the tape cutter cut a foreign object., improving the life span of the cutter blades.

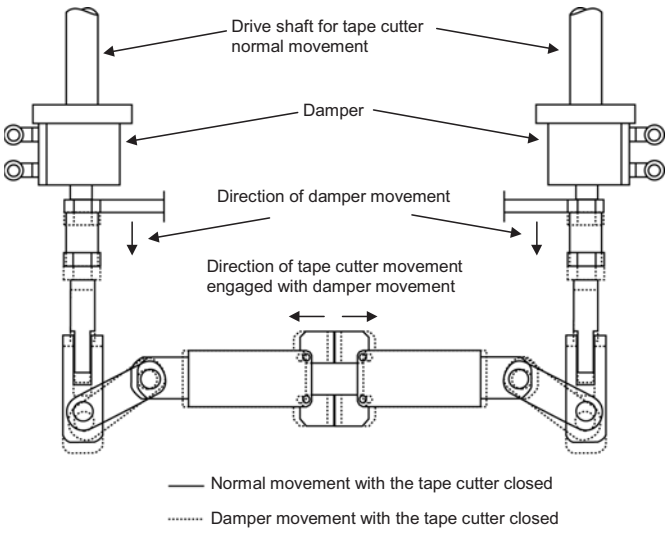

All hole self-offset (Standard feature)

The recognition of all insertion holes (two holes) and optimum insertion position offset realize stable insertion.
The rotation offset and insertion pitch offset functions are also available, to realizes high insertion rate through accurate positioning of XY, theta and W.

* Specifications common to AVK3

*Flexibility **

Standardized insertion unit

- The swing type bending die makes it possible to handle a lead of 0.4 mm to 0.8 mm diameter and insertion pitch of 5 mm to 26 mm per tool, improving flexibility.
- It is unnecessary to exchange the insertion unit according to the components to be inserted, which results in significant improvement of productivity.

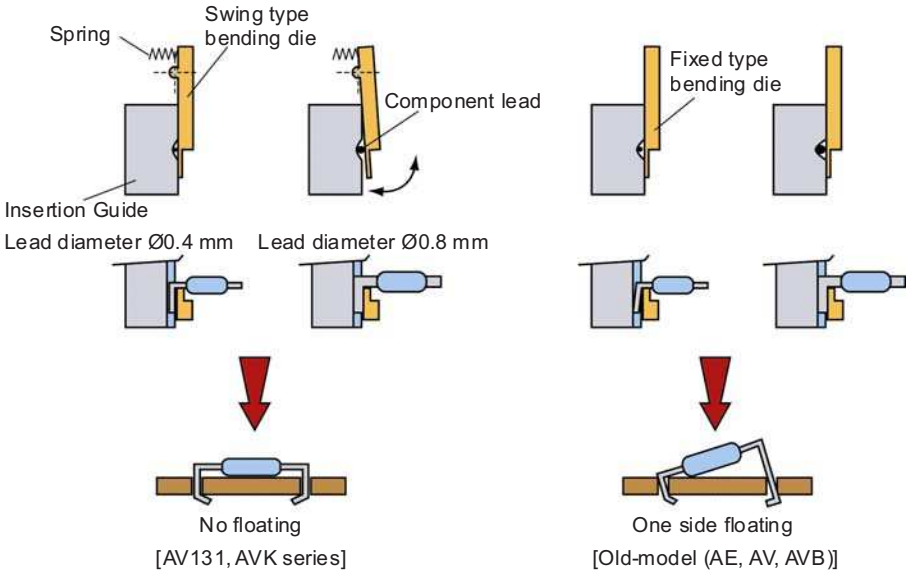

Mixed loading of 26 mm and 52 mm feeders (Note)

The vertical 6-input component cartridge makes it possible to load both 26 mm and 52 mm feeders together and to ensure a maximum of 120 inputs for NM-EJA3A and 60 inputs for NM-EJA2A.

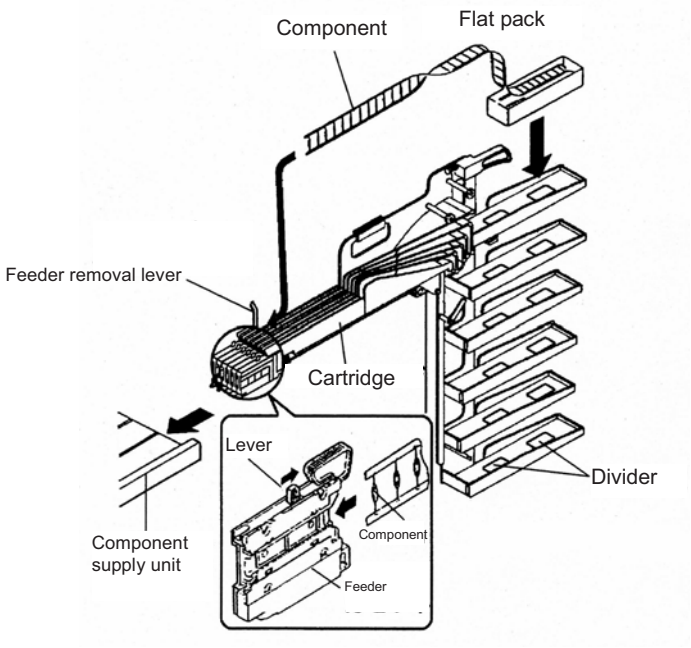

(Note) The component feeder is renamed the feeder.
This is common to and sharable with that for AVK3.

* Specifications common to AVK3

Improvement of operability and maintainability

Improved operability

- The same control panel is installed at the front and the rear, greatly improving the operability (standard specifications).
- The control panel with LCD touch screen provides easy and guiding operation. Languages are selectable among Japanese, English, and Chinese.
- Through the new controller, up to 200 programs can be stored. For data I/O, high capacity SD memory card is supported.
- The changeover support function is available, displaying the screen that shows the components arranged in the component supply unit.
- The maintenance support function is available, displaying the routine maintenance timing and details.

Rear control panel

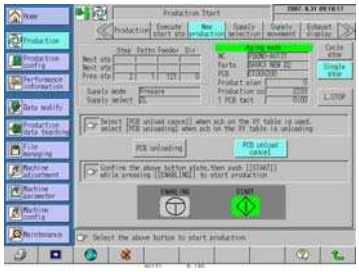

Guiding operation dialog

Changeover support function

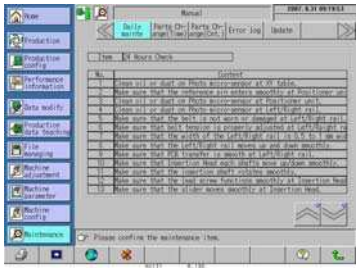

Maintenance support function

Adoption of global transformer *

The built-in global transformer comes with selectable voltage setting of 200, 220, 380, 400, 420 and 480 V, an external transformer becomes unnecessary.

NC data compatibility *

NC data used for the previous machines (AV, AVB, AVF, AVG, AVP, AVK, AVK2, AVK2B, and AVK3) can be used for the AV131.

Standardization of recommended spare parts *

The recommended spare parts used for previous machines (AVK series) can be used for the AV131.
(Note: Excluding the lead cutter (fixed))

* Specifications common to AVK3

3. Machine Specifications

3.1 Standard Specifications

Electric Source	・Rated voltage	Selectable: 3-phase 200/220 V ±10 V 3-phase 380/400/420/480 V ±20 V
	・Frequency	50/60 Hz
	・Rated capacity	4 kVA
Pneumatic Source	・Supply air pressure	Min. 0.45 MPa to Max. 0.8 MPa (Working air pressure: 0.45 MPa to 0.5 MPa)
	・Supply air amount	150 L/min. (A. N. R.)
	Note: One-touch coupler (SMC KK13P-03M, KK13S-03F)	
Dimensions	・NM-EJA3A	W 4 070 mm × D 1 910 mm × H 1 610 mm (Not including signal tower)
	・NM-EJA2A	W 2 810 mm × D 1 910 mm × H 1 610 mm (Not including signal tower)
Mass	・Machine mass	NM-EJA3A 2 520 kg (Main unit only) NM-EJA2A 1 750 kg (Main unit only)
Environment	・Ambient temperature	20 °C ±10 °C
Operation Unit	・LCD color touch panel providing interactive operation (standard at the front and the rear) Languages selectable among Japanese, English, and Chinese, with one touch of a button Recognition screen display (superimposed PCB recognition screen) Hierarchical operation (operator/engineer)	
	・Input/Output device	SD card slot is standard. (Support up to 2 GB)
	・Communication	RS-232C
Paint Color	・Standard color	White W-13 (G50)

Control System	・Microcomputer system	
Programming Method	・XY axis	Absolute coordinate command (Incremental coordinate can be displayed at the time of edit of recognized data.)
	・Insertion pitch	Absolute command
	・Component supply unit	Feeder position number command
XY Table Movement Increment	・0.01 mm/pulse	
Program	No. of NC programs	
	・Embedded flash memory	No. of programs: 200, 5 000 steps/program
	(Note: For the program such as Pattern Repeat, the total number of steps after development shall be 5 000 or less.)	
	・SD card	Depends on the card space (up to 2 GB supportable).
Signal Tower	・3-color signal tower (Standard : red, yellow, green)	
Hole Position Correction Method	・Calculates the optimum insertion position from the results of all-hole (XY offset, theta offset, pitch offset) position recognition and correct the NC data. * Refer to "4.9 PCB Recognition Offset Function" for recognition method	
Self-Diagnosis Function	・This function displays the status of the machine when the power is turned on and when trouble occurs on the color LCD. Also displays the solutions to the trouble.	
Others	・Program Functions See "7.1 Program Functions" for recognition method. ・Pana PRO This software is for line optimization and data division for multiple-machine connected line. ・Data Compatibility Data used for AV, AVB, AVF, AVG, AVP, AVK, AVK2, AVK2B and AVK3 can be used for the AV131.	

*When resuming operation after a long shutdown, check the machine operation in the manual mode, and age the machine (idle running).

3.2 Standard Functions

(1/2)

<table>
<tr><th>Item</th><th>Specification</th></tr>
<tr><td>Insertion Tact Time</td><td>・Max. tact: 0.12 s/component
Conditions required for max. tact of 0.15 s/component
<table>
<tr><th>Applicable Components / Insertion Angle</th><th>Axial Lead Components</th><th>Jumper Wire</th></tr>
<tr><td>X (0°)</td><td>0.15 s/component</td><td>0.12 s/component</td></tr>
<tr><td>Y (90°)</td><td>0.12 s/component</td><td>0.15 s/component</td></tr>
<tr><td>-X (180°)</td><td>0.15 s/component</td><td>—</td></tr>
<tr><td>-Y (270°)</td><td>0.24 s/component</td><td>—</td></tr>
</table>
Other conditions
・XY table movement
X: Max. 35 mm, Y: Max. 39.5 mm (When interlock 2 is selected.)
(X: Max. 30 mm, Y: Max. 34 mm when there are components of 3 mm or taller on the PCB (When interlock 1 is selected.))
・Feeder movement range in component supply unit
No movement (One pitch movement of feeder: 0.14 s/component)</td></tr>
<tr><td>Insertion Pitch Switchover within the Tact</td><td>・5.3 mm within the tact (0.12 s/component)</td></tr>
<tr><td>Applicable Components</td><td>・Taped axial lead components
(carbon resistor, cylindrical ceramic capacitor, solid resistor, diode and taping jumper wire)
・Jumper wire (optional)
Refer to “5. Component Specifications” for components dimensions.</td></tr>
<tr><td>Component Packaging</td><td>・Flat pack</td></tr>
<tr><td>PCB Replacement Time</td><td>・Approx. 2 s (at an ambient temperature of 20 ℃)</td></tr>
<tr><td>Applicable PCB
 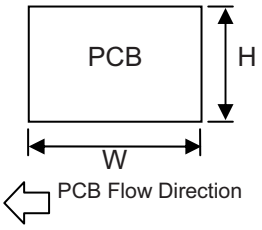
</td><td>・Dimensions
Min. 50 mm × 50 mm to max. 508 mm × 381 mm
PCB H/W ratio: H≤W. Please contact us for H>W.
・Insertion area
Min. 50 mm × 40 mm to Max. 508 mm × 371 mm
・Thickness
1.6 mm ±0.15 mm (Standard)
*1: Min. 0.6 mm to Max. 2.0 mm are supportable. Please see “9. Option B-2.”
*2: For even the above PCB thickness, such conditions as its shape and insertion hole shape may cause variations in clinch angles and lengths of leads or problems in PCB transfer, so please consult us beforehand.
・Mass
Max. 1 kg including placed components
・Direction of PCB flow
Right to left (Standard) or Left to right (Option specification)
・PCB positioning method Standard: Pin
* For the edge positioning, please consult Panasonic</td></tr>
</table>

(2/2)

Item	Specification
No. of Component Inputs	NM-EJA3A 1. Taping width 26 mm 120 inputs (60 + 60) + Drum type jumper wire (optional) 2. Taping width 52 mm (Pack width: Max. 80) 120 inputs (60 + 60) + Drum type jumper wire (optional) 3. Taping width 26 mm and 52 mm can be used. NM-EJA2A 1. Taping width 26 mm 60 inputs + Drum type jumper wire (optional) 2. Taping width 52 mm (Pack width: Max. 80) 60 inputs + Drum type jumper wire (optional) 3. Taping width 26 mm and 52 mm can be used.
Insertion Direction	・4 directions (0 °, 90 °, 180 °, -90 °)
Insertion Pitch	・5 mm to 26 mm (0.01 mm increments.) (5 mm to 26 mm for jumper wire (optional))
Insertion Height	・Insertion height programmable according to the component diameter and lead diameter
Insertion Bending Angle	・15° to 30° inner bending
Insertion Bending Length	・1.5 mm ±0.3 mm (Standard length1.5 mm)* 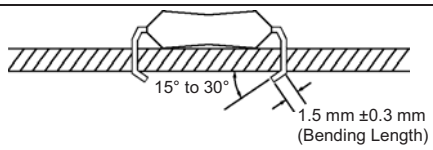 *The above numerical range indicates the variation which arises due to difference in the diameter and type of component lead and the diameter of insertion hole of the PCB. *To change the bending length (to change the standard length), it is necessary to change the anvil. (Individual application) Note 1. A clinch mark is form when lead is cut and bend, remains at the tip of the lead. The clinch mark differs depending on the diameter and materials of lead of the insertion component. 2. The bent lead slants about ±10° in the horizontal directions according to the diameter and positional accuracy of the hole on the PCB. (see the right figure) 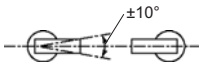
Anvil	・Cut & Clinch system (Piezoelectric detection system)

4. Machine Configuration

4.1 Overall Drawing

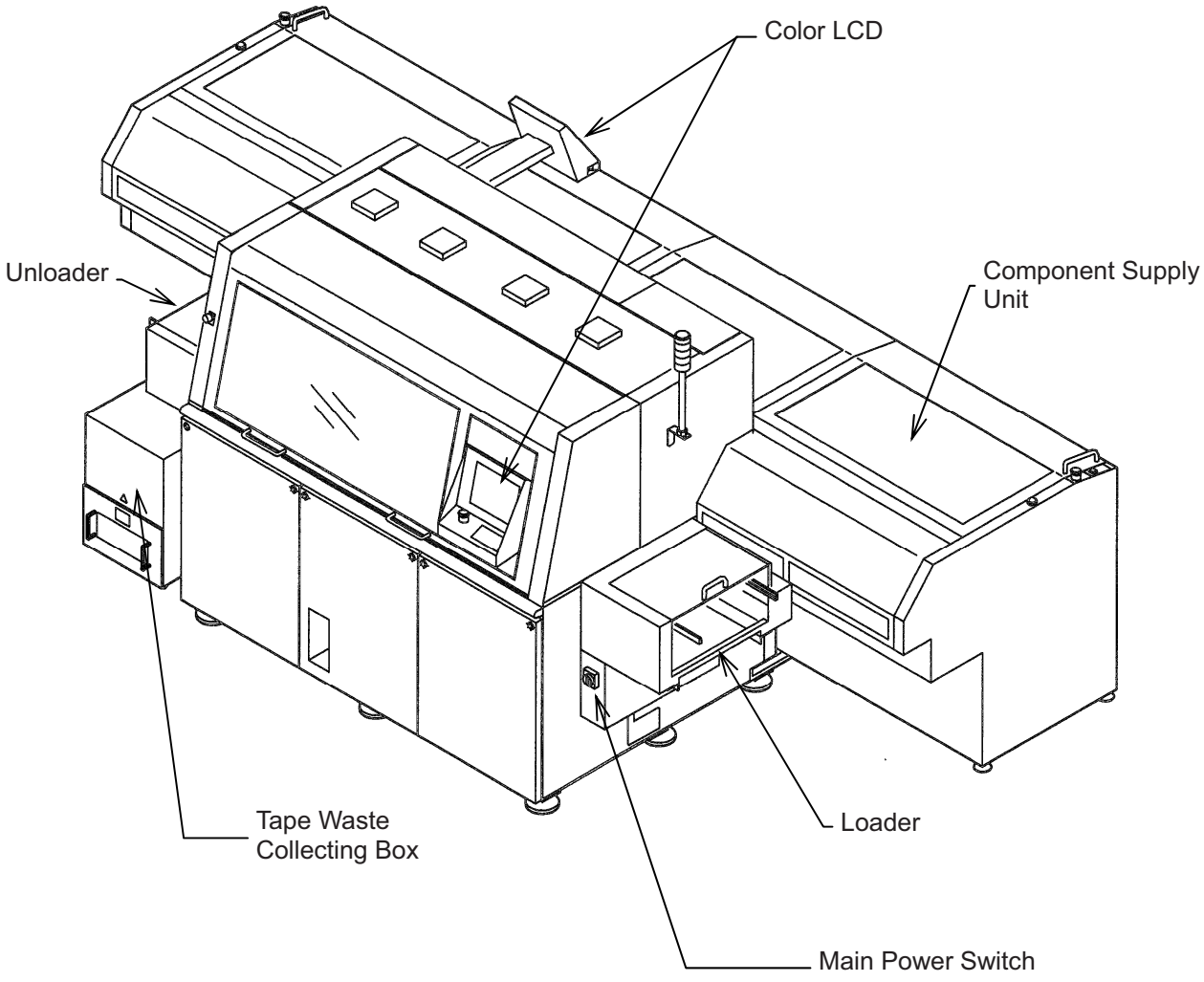

* NM-EJA3A

4.2 Tape Cutting Unit with Dampers

A damper of 2.5 mm provided on each side of the tape cutter (5.0 mm on both sides) reduces damages to the cutter blades if the tape cutter cut a foreign object, improving the life span of the cutter blades.

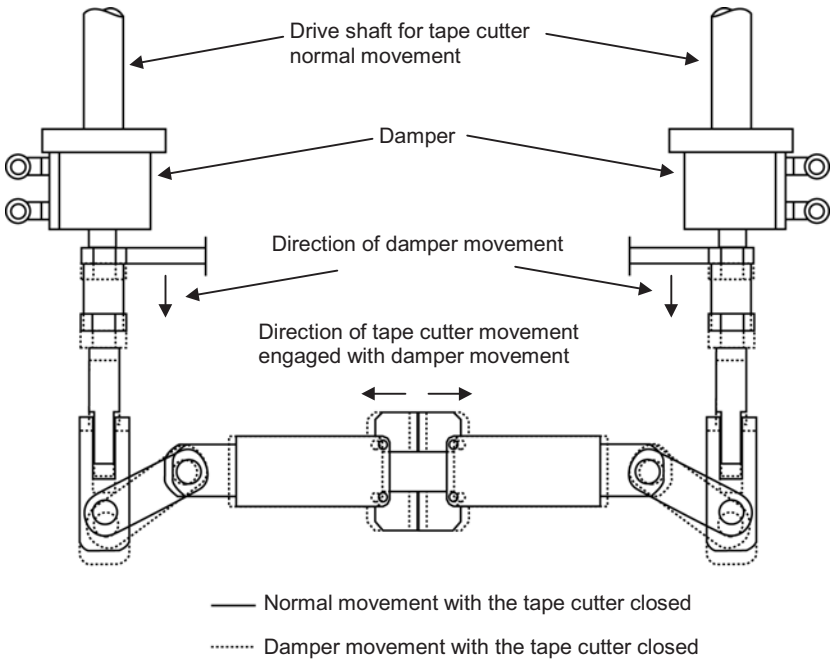

4.3 Insertion Unit

A swing type bending die allows the insertion unit to handle a wider range of components: the lead diameter is from 0.4 mm to 0.8 mm and the required insertion pitch is from 5 mm to 26 mm.
It is unnecessary to exchange the insertion unit according to the components to be inserted, which results in significant improvement of productivity

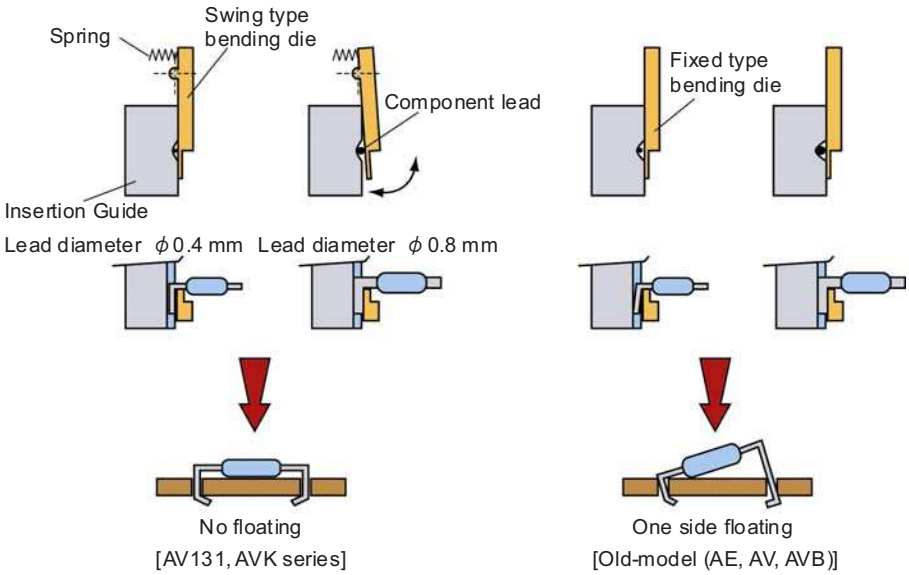

4.4 Vertical Feeder

- The vertical feeder can load a maximum of 120 inputs for NM-EJA3A and 60 inputs for NM-EJA2A even though it has a smaller footprint.
- Using the common cartridge for 26 mm and 52 mm wide component tapes, max. 120 inputs of 52 mm components can be set as well as 26 mm.
- 26 mm and 52 mm components can be set on a cartridge together, which improves the flexibility of component arrangement on the feeder carriage.

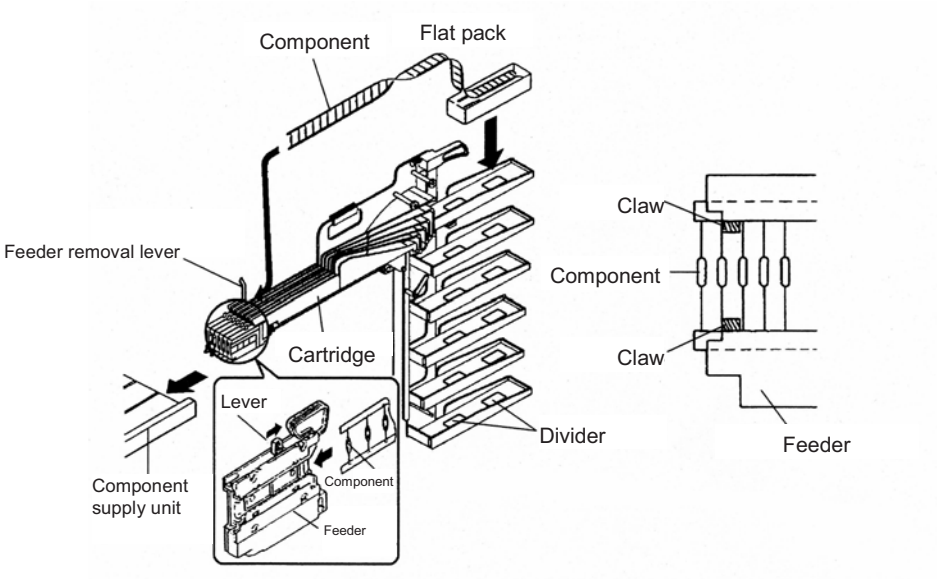

4.5 Separate Feeder Carriage (For NM-EJA3A only)

■ General Description

AV131's separate feeder carriage system offers you an excellent operation rate and complete production efficiency by reducing down time due to component exhaustion and production changeover.
Also, this can hold a maximum of 120 component types (26 mm and 52 mm taping) which greatly improves equipment production rate.

■ Operation Mode

The appropriate operation mode can be selected according to the production type such as mass production and multi-item small lot production.

(1) EXCHANGE MODE

Ideal for limited item, large lot production and continuous operation

The same component types are placed in both (L) and (R) tables. If, for example, component exhaustion occurs in (L) table during production, it is replaced by (R) table in the standby position. Recovery is then executed using the components in (R) table, and production is continued using (R) table. While (R) table is engaged in production, (L) table can be re-stocked with components.

(2) PRIORITY EXCHANGE MODE

Ideal for limited item, small lot production and continuous operation

The same component types are placed in both (L) and (R) tables, and one table is designated as priority. When components from that table exhausted, production is continued with the other table. After components are replenished on the priority table, production is continued with that table again.

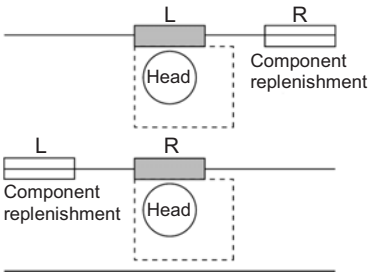

(3) PREPARATION MODE

Ideal for multi-item, small lot production involving frequent production changeover

While (L) table is engaged in production, the operator prepares the other table (R) for the next production.

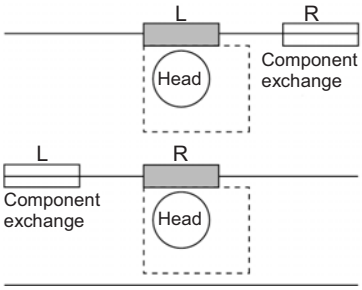

(4) CONNECTION MODE

Ideal for a multitude of component types

By using both (L) and (R) tables, 120 types of components can be placed. (L) and (R) moves together.

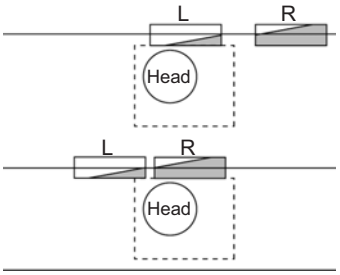

(5) EXCHANGE CONNECTION MODE

Ideal for a multitude of component types and continuous operation

By using both (L) and (R) tables together, 120 types of components can be inserted.
If components from (L) table exhausted, the empty table (L) is not transferred to the standby position until the other table (R) starts production. The other table (R) can continue the production while component in (L) is being exchanged. (It is necessary to check dead space.)

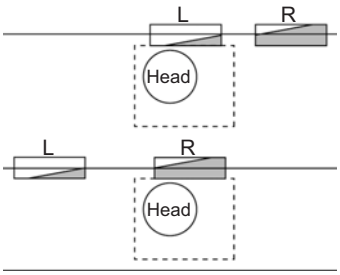

4.6 Feeder Carriage Configuration (NM-EJA3A)

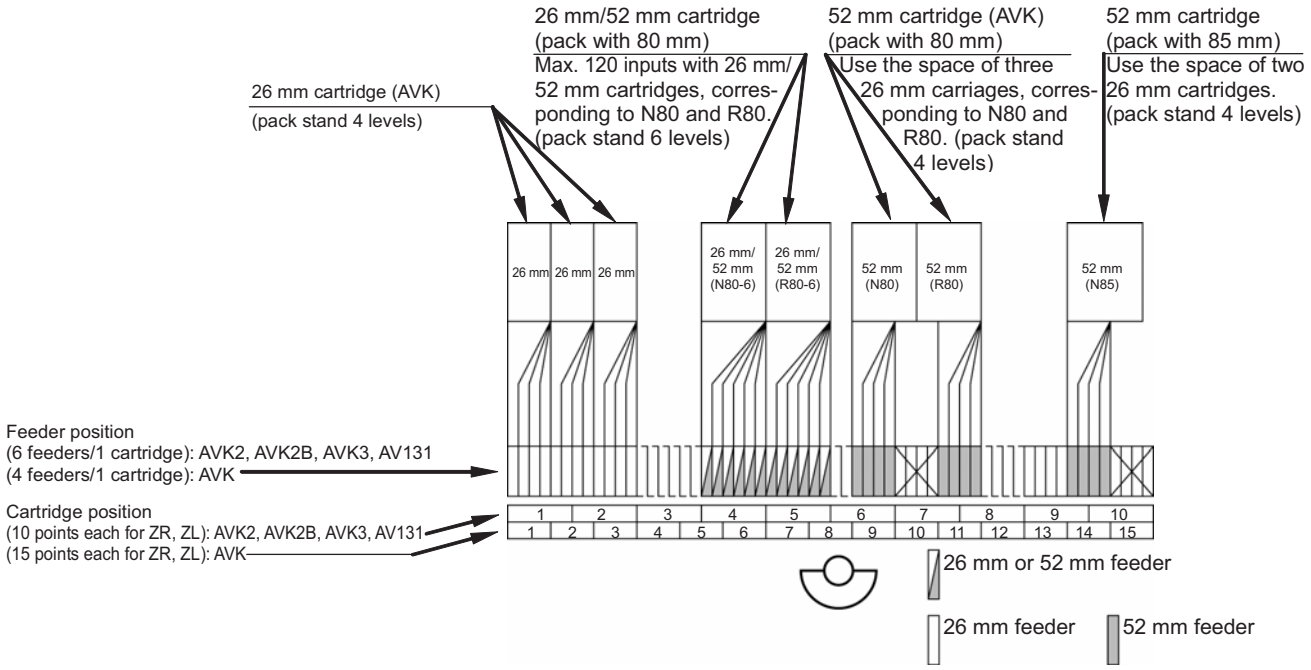

(1) 6 level cartridge (26 mm/52 mm cartridge)
26 mm taping flat packs (60 inputs + 60 inputs)
52 mm taping flat packs (60 inputs + 60 inputs) (Flat pack width: Max. 80mm)

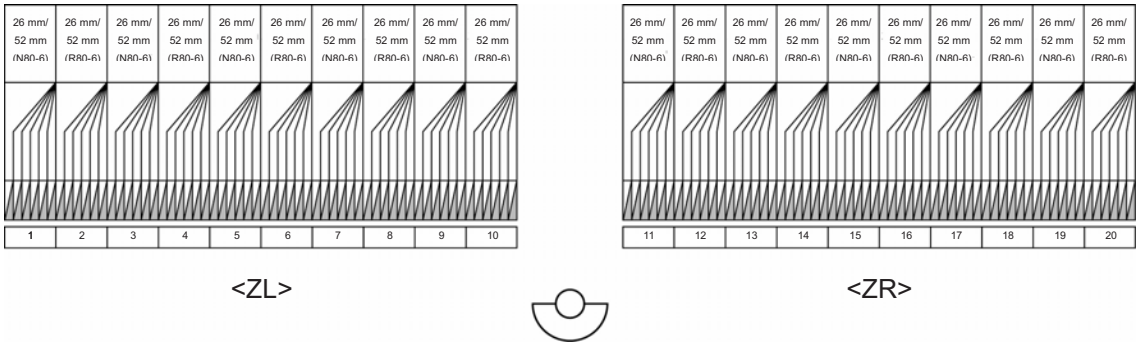

(2) 52 mm taping flat packs (pack width: Max. 80mm) (40 inputs + 40 inputs)
(When using AVK cartridge)

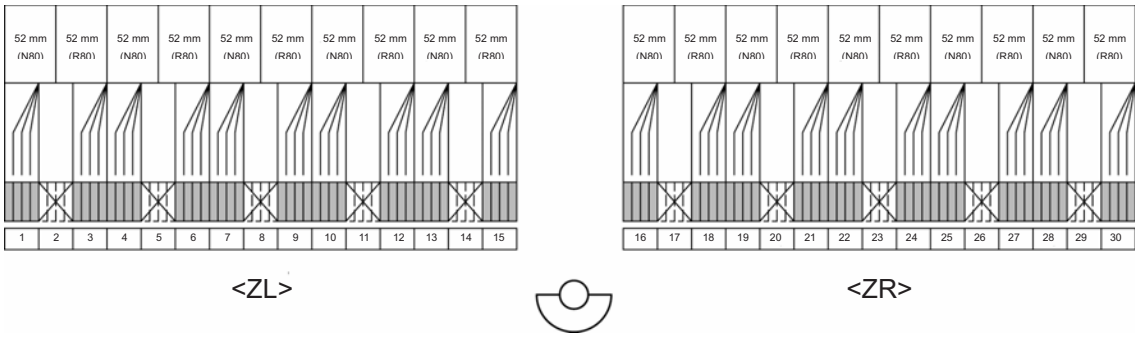

(3) 52 mm taping flat packs (pack width: Max. 85 mm) (28 inputs + 28 inputs)
(When using AVK cartridge)

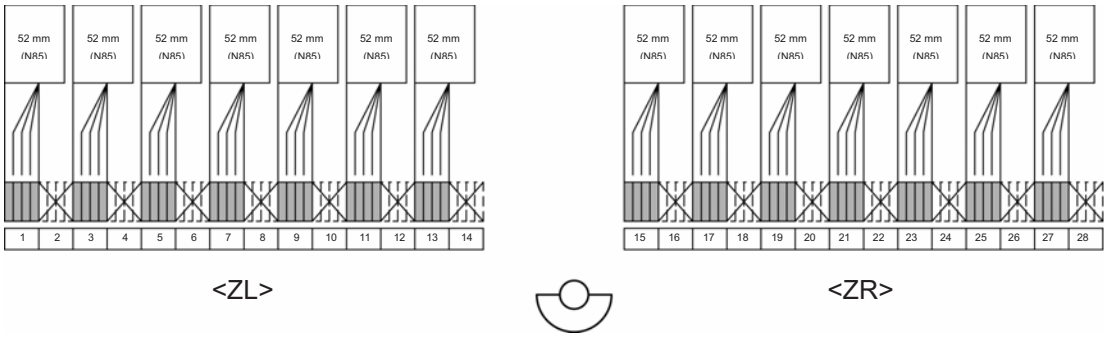

*1 Six flat packs are supplied with one 26 mm/52 mm cartridge. (6 level cartridge)
*2 The flat pack width with 26 mm/52 mm carriage is max. 80 mm.
*3 26 mm/52 mm cartridges are only for the AVK2, AVK2B, AVK3 and AV131 and cannot be loaded on AVK.
However, the AVK 4-input carriage can be loaded on AVK2, AVK2B, AVK3 and AV131.

4.7 Feeder Carriage Configuration (NM-EJA2A)

■ **Outline**

A maximum of 60 kinds of components (both 26 mm and 52 mm tapings) can be loaded.
EOP function for component exhaustion makes it possible to improve the operation rate of the machine

4.8 Example of Feeder Carriage Configuration (NM-EJA2A)

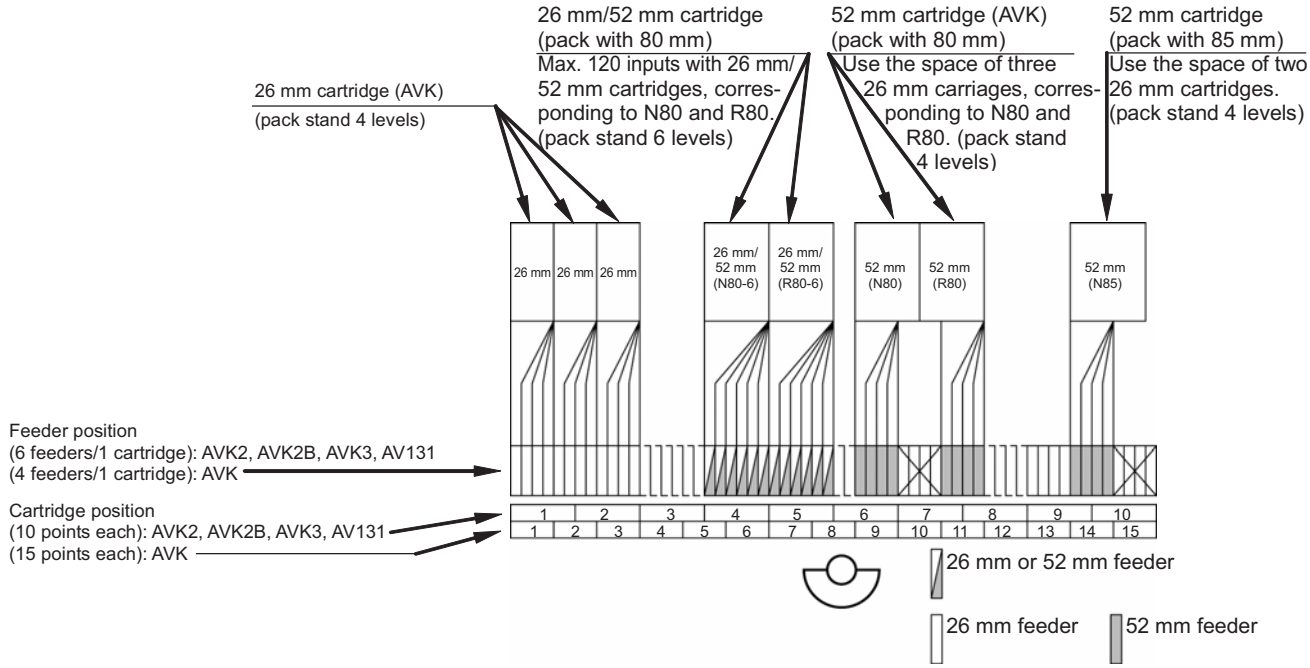

(1) 6 level cartridge (26 mm/52 mm cartridge)
26 mm taping flat packs (60 inputs)
52 mm taping flat packs (60 inputs) (Flat pack width: Max. 80mm)

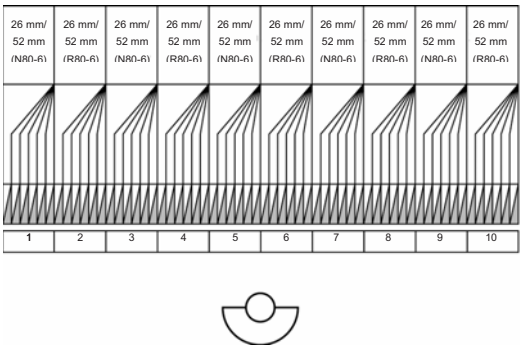

(2) 52 mm taping flat packs (pack width: Max. 80mm) (40 inputs)
(When using AVK cartridge)

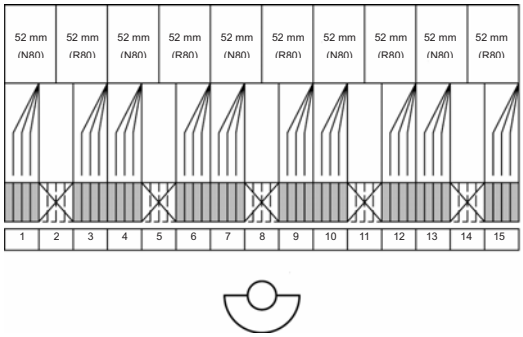

(3) 52mm taping flat packs (pack width: Max. 85 mm) (28 inputs + 28 inputs)
(When using AVK cartridge)

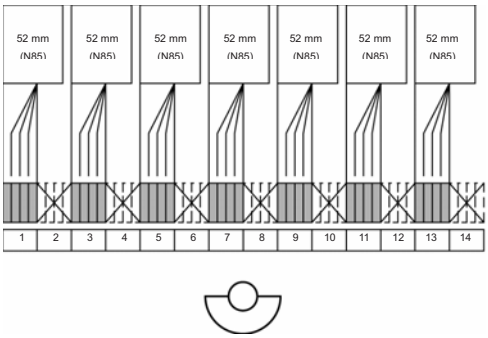

*1 Six flat packs are supplied with one 26 mm/52 mm cartridge. (6 level cartridge)
*2 The flat pack width with 26 mm/52 mm carriage is max. 80 mm.
*3 26 mm/52 mm cartridges are only for the AVK2, AVK2B, AVK3 and AV131 and cannot be loaded on AVK.
However, the AVK 4-input carriage can be loaded on AVK2, AVK2B, AVK3 and AV131.

4.9 PCB Recognition Offset Function

■ General Description

Capable of selecting various types of recognition modes to correspond with the production state (PCB precision, component precision, etc.), and is capable of high-quality, high-precision placement.
There are two types of recognition modes - one for offsetting per two holes of each insertion point, and one for offsetting the entire PCB. The former carries the modes of all-hole offset , optional hole offset, repair offset, theta offset, and pitch offset, and the latter carries the modes of PCB offset and PCB orientation offset.
We will call the former the insertion point two-hole recognition offset, and the latter the reference hole recognition offset.

■ Insertion Point Two-hole Recognition Offset (all-hole offset, optional hole offset, repair offset, theta offset, pitch offset)

Function which corrects per every insertion point

All-Hole Offset ····· Recognizes the two holes of the PCB insertion point, seeks the offset of the X and Y coordinates against the NC data, and corrects the offset during insertion.

Optional Hole Offset ·· Recognizes the two holes of the insertion point specified with the NC data, seeks the offset of the X and Y coordinates against the NC data, and corrects the offset during insertion.

Recovery Offset ····· Recognizes at 2 hole recovery of the insertion point that caused an insertion error, seeks the offset of the X and Y coordinates against the NC data, and corrects the offset during insertion.

Theta offset ····· At all-hole offset, optional hole offset, or recovery offset, this function seeks the theta of the two holes of the recognized insertion point, and corrects the theta during insertion.

Pitch Offset ····· At all hole offset, optional hole offset, or recovery offset, this function seeks the pitch of the two holes of the recognized insertion point, and corrects the offset against the NC data during insertion.

All-hole/Optional hole/ Recovery offset concept diagram

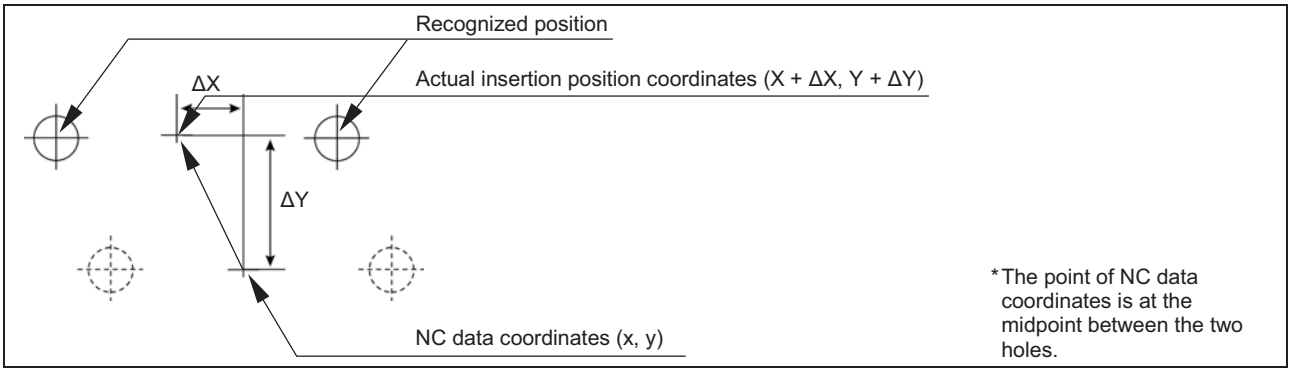

Theta/Pitch offset concept diagram

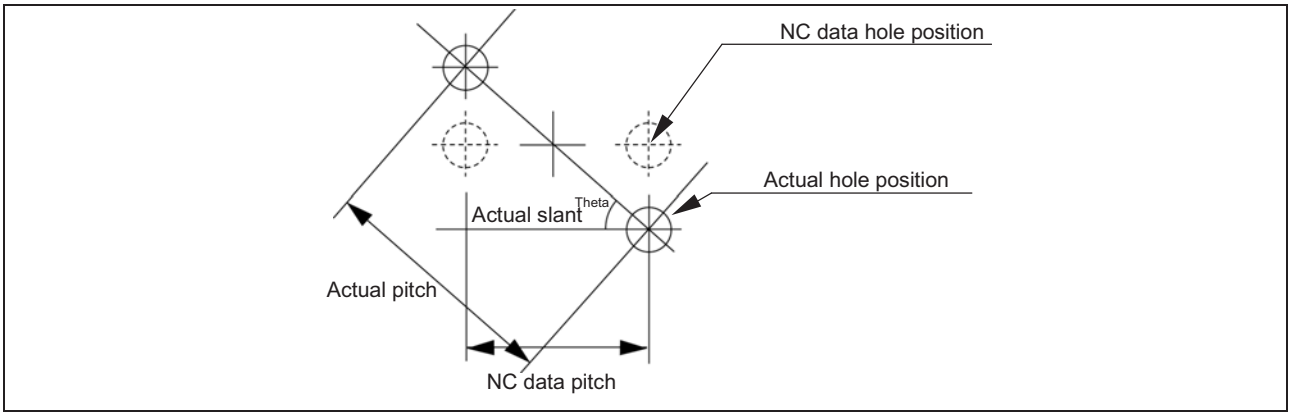

■ Reference Hole Recognition Offset (PCB offset, PCB orientation offset)

This function corrects the offset of the entire PCB by specifying (teaching) the optional hole on the PCB.

PCB offset····· Teaches the hole (reference hole) on the PCB, and by recognizing the taught hole before production, corrects the parallel offset of the entire PCB.

PCB orientation offset···· Teaches the two holes (diagonal corners) on the PCB, and by recognizing the taught two holes before production, offsets the parallel offset of the entire PCB and the position offset of all insertion points caused by PCB slanting.

.

PCB offset concept diagram

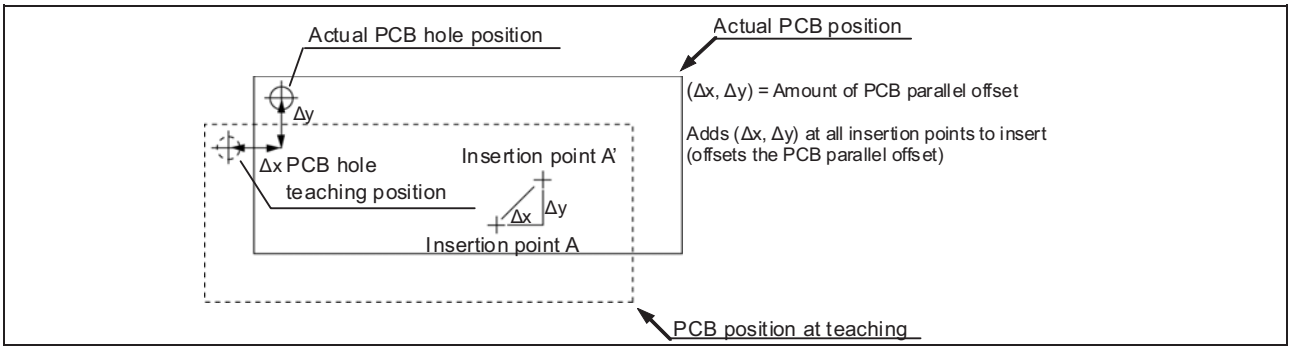

PCB orientation offset concept diagram

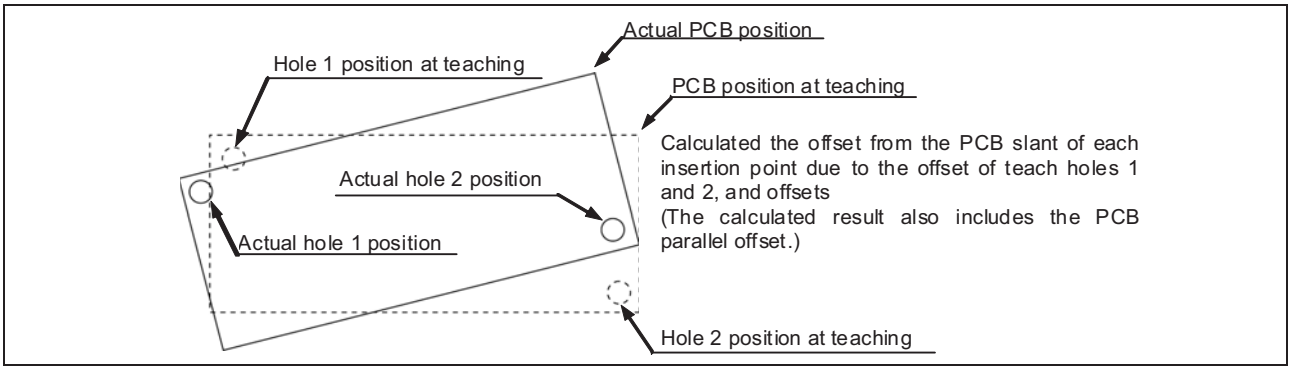

■ First Hole Recognition Offset

This function offsets the slippage of the entire PCB by recognizing the first insertion hole on the PCB. When using Step & Repeat data, the first hole of each pattern is recognized and the slippage is offset for each pattern.

*When both reference hole recognition offset and first hole recognition offset are selected, the first hole recognition is available.

First hole recognition concept drawing

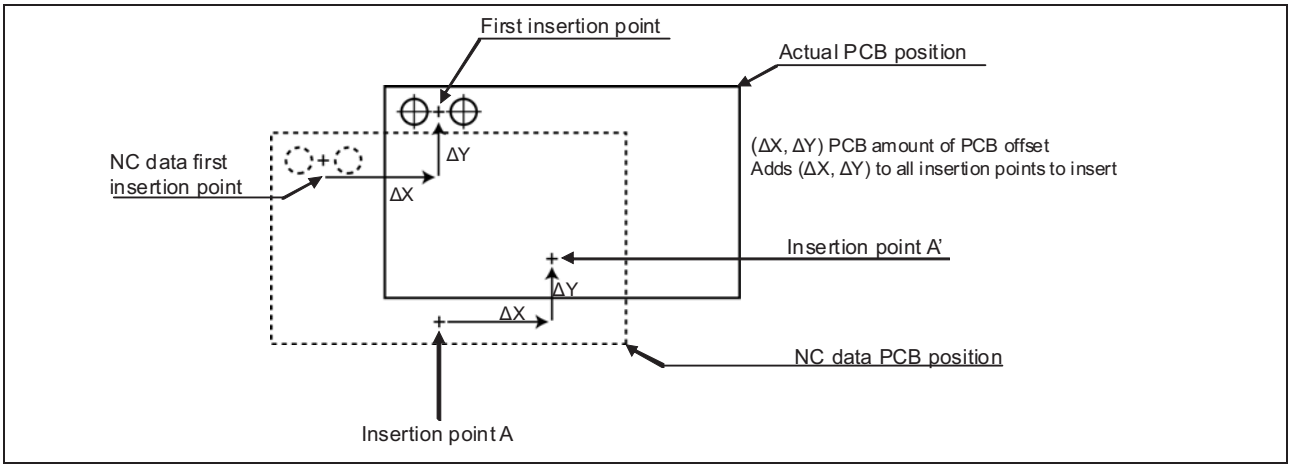

First hole recognition concept drawing when using Step & Repeat data

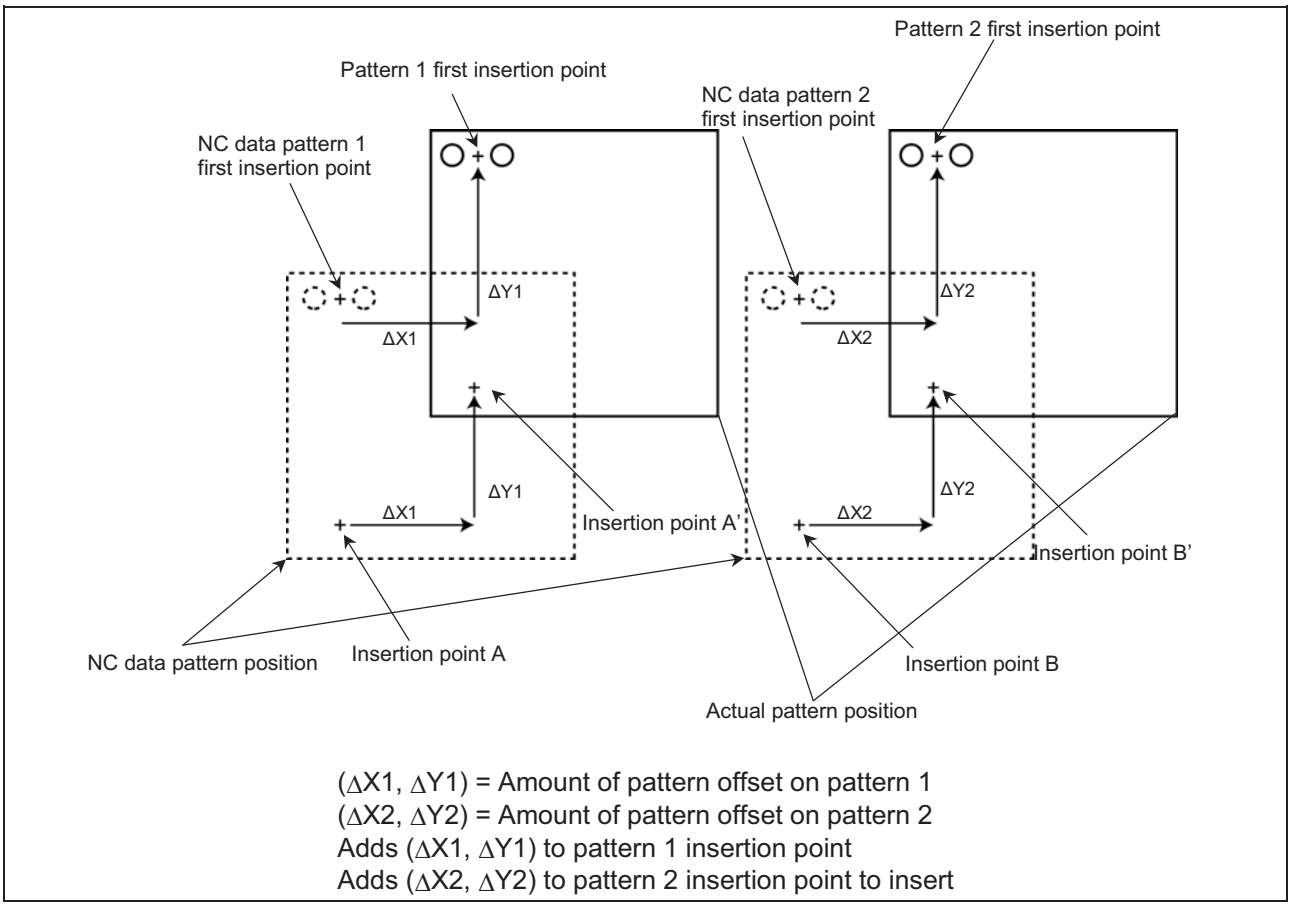

5. Component Specifications

5.1 Axial Lead Component Taping Specifications

(Unit: mm)

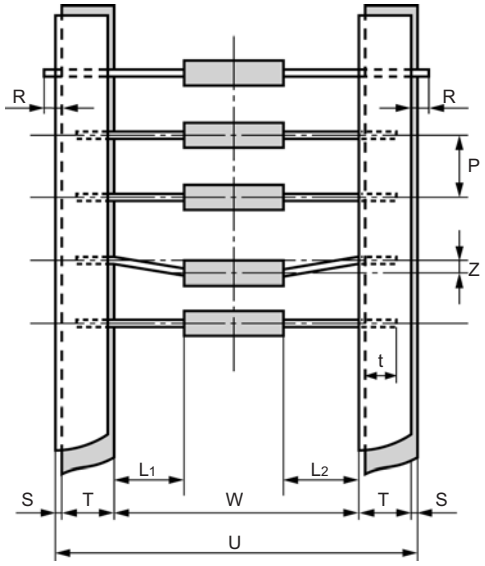

Accuracy	I	II	III	Remarks
W	$26^{+0.2}_{0}$	$26^{+0.5}_{0}$	$26^{+1.5}_{0}$	
	($52^{+0.2}_{0}$)	($52^{+0.5}_{0}$)	($52^{+1.5}_{0}$)	52 mm taping with minus tolerance W dimension require 52 mm special (minus-tolerance-ready) feeder ($51^{+2.5}_{0}$ mm). Note: 4, 5, 6, 7, 8
P	5 ±0.3		5 ±0.5 *	The permissible cumulative pitch error is ±2 mm in 20 pitches.
L1 - L2	Max. 0.2	Max. 0.5	Max. 1	
T	6 ±1 *			
Z	Max. 1.0		Max. 1.2 *	
R	0			* Lead wire terminal does not protrude from tape.
t	Min. 3.2 *			Length of lead wire terminal on section positioned on tape
S	Max. 0.8 *			
U	Max. 65.5			
Remarks	5P insertion			

Note:
1. Conforms to JIS standards. Others conform to Panasonic specifications.
2. Use the above dimensions when using sequence tape.
3. Use tin-plated lead wire. (Tin content: 95% or more)
4. Discuss separately when inserting 5 mm pitch from 52 mm tape.
5. 52 mm taping with minus tolerance W dimension require 52 mm special (minus-tolerance-ready) feeder ($51^{+2.5}_{0}$ mm).
6. For 52 mm taping with plus tolerance W dimension, if 52 mm special (minus-tolerance-ready) feeder ($51^{+2.5}_{0}$ mm) is used, there is a high possibility of center offset.
7. The center chuck cannot be used with fragile components such as glass diodes.
8. With insertion pitches within component offset tolerance, even fragile components can be inserted without centering. (When using 52 mm special (minus-tolerance-ready) feeder (51 mm))$^{+2.5}_{0}$
9. The edge shape of component may have an effect on centering.
10. The length of a component body is up to 15 mm. Please consult Panasonic if the length exceeds 15 mm.
11. U dimension (U = S + T + W + T + S) should be 65.5 mm or less.

5.2 Applicable Insertion Components

■ Axial Lead Component

Insertion pitch (P): 26 mm taping 5.0 to 12.7 mm pitch
52 mm taping 5.0 to 26.0 mm pitch

* For 5.0 mm pitch insertion, use accuracy (I) tape
(Refer to "5.1 Axial Lead Component Taping Specifications")

Component lead wire diameter (d): ϕ0.4 mm to 0.8 mm (Do not exceed ϕ0.8 mm)

Component body diameter (Db): Max. ϕ4.4 mm (when using 1.6 mm PCB)

* Please use the one with the tinned surface. (The tin content shall be 95% or more.)
* The body diameter is limited by the thickness of the PCB.
Please refer to the following chart.

Body diameter (mm) / PCB thickness (mm)	ϕ1.7	ϕ2.0	ϕ2.3	ϕ2.6	ϕ2.9	ϕ3.2	ϕ3.5	ϕ3.8	ϕ4.1	ϕ4.4	ϕ4.7	ϕ5.0
1.0	○	○	○	○	○	○	○	○	○	○	○	○
1.2	○	○	○	○	○	○	○	○	○	○	○	○
1.4	○	○	○	○	○	○	○	○	○	○	○	△
1.6	○	○	○	○	○	○	○	○	○	○	△	△
1.8	○	○	○	○	○	○	○	○	○	△	△	×
2.0	○	○	○	○	○	○	○	○	△	△	×	×

○: Insertion is possible, ×: Insertion is impossible, △: Contact Panasonic. (Shape of components (lead wire) insertion vary.)

Component body length (Lb): Taping accuracy (I) Max. Lb = Insertion pitch (P) - 1.6
Taping accuracy (II) Max. Lb = Insertion pitch (P) - 2.0
Taping accuracy (III) Max. Lb = Insertion pitch (P) - 2.7
* In the case of 5 mm pitch insertion, max. Lb is 3.4 mm (5 - 1.6 = 3.4)

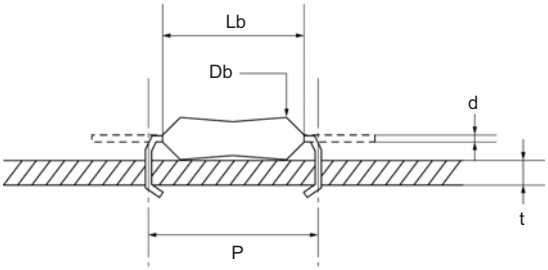

* When using the centering chuck, and taping accuracy (I), insertion of equivalent component length when using taping as accuracy (I) is possible. (However, depending on the shape of the edge of the component, as the centering accuracy may vary, check the actual component).
* The lead bending radius differs depending on the materials.
(The finer and the softer the lead is, the smaller the bending radius becomes. In addition, the heavier and the harder the lead is, the larger the bending radius becomes.)
* On the lead a pusher mark is form when lead is bent and clinch mark is form when lead is clinch.
These two marking will differs depending on the diameter and materials of lead of the insertion component.

■ Jumper Wire

Insertion pitch (P): 5 mm to 26 mm

Wire diameter: ø0.6 ±0.02 mm (For others diameters: ø0.4 mm to ø0.8 mm, please consult Panasonic)

Material: Soft copper wire (For others type, life span of consumable part and component forming will be affected, please consult Panasonic)

* Please use the one with the tinned surface. (The tin content shall be 95% or more.)

5.3 Taping Component Packaging

■ Flat Pack

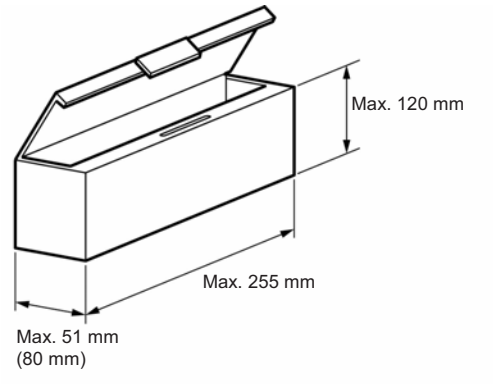

*( ) = 52 mm taped components
Please contact Panasonic if the taping box width exceeds 80 mm.
(Please refer to “4.6 Feeder Carriage Configuration”)
The maximum mass of a flat pack is 1 kg. The total mass of the flat packs one cartridge can load is up to 4.5 kg.

5.4 Jumper Wire Specifications

Jumper wire unit can be loaded on the right side seen from the head.
(Regardless of feeder carriage specifications) (Optional)

(1) Jumper Wire

Wire diameter: ø0.6 ±0.02 mm (For others diameters: ø0.4 mm to ø0.8 mm, please consult Panasonic)

Material: Soft copper wire (For others type, life span of consumable part and component forming will be affected, please consult Panasonic)

Surface processing: Tin plated (Tin content: 95% or more)

(2) Packaging

- Floor-setting drum (Basic specifications)
  Diameter of ground contact area: ø300 mm or below
  Height: 400 mm or below
  Please use a floor-setting drum that does not prevent you from pulling out the jumper wire from top

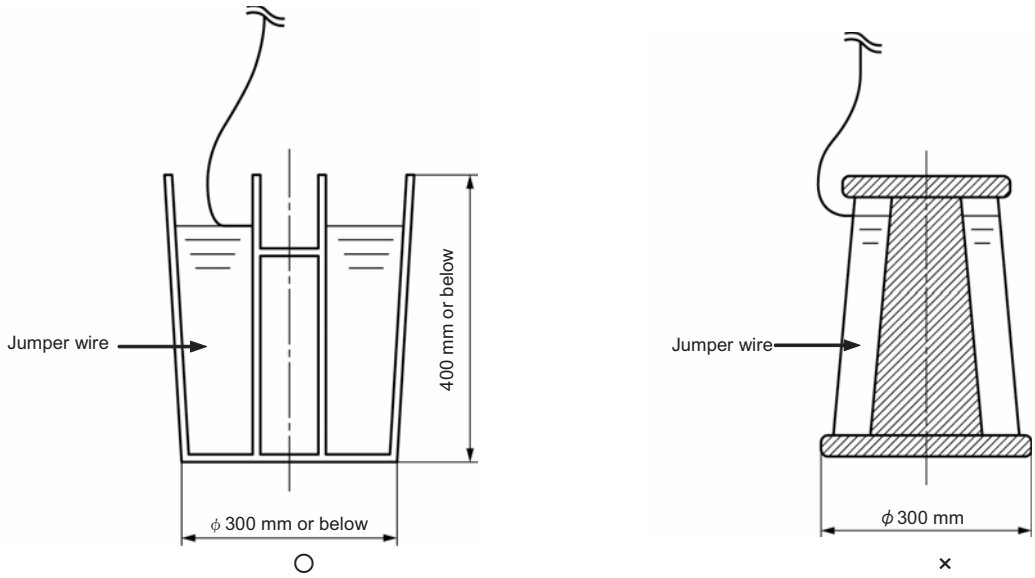

* Please consult Panasonic for any other sizes and shapes.

- Reel (Conforms to JIS P-3)

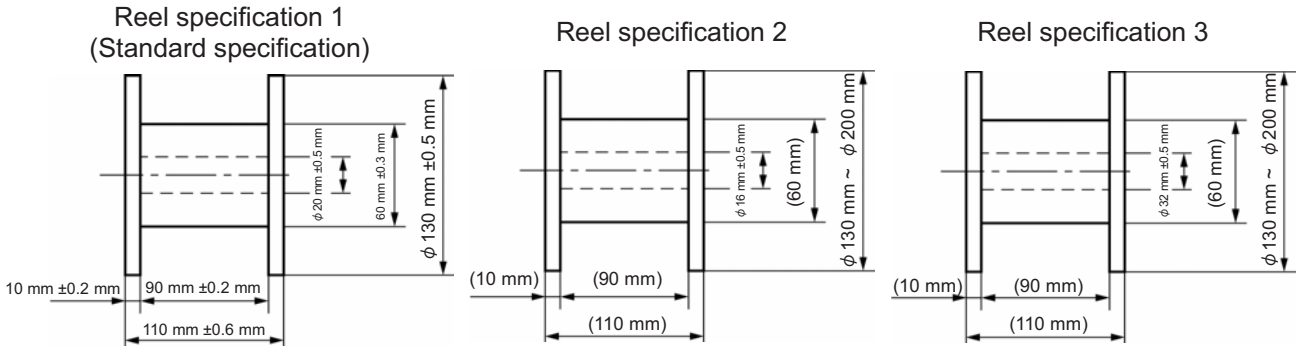

* Please consult Panasonic for any other sizes and shapes.

6. PCB Requirements and Restrictions

6.1 PCB Specifications

(Unit: mm)

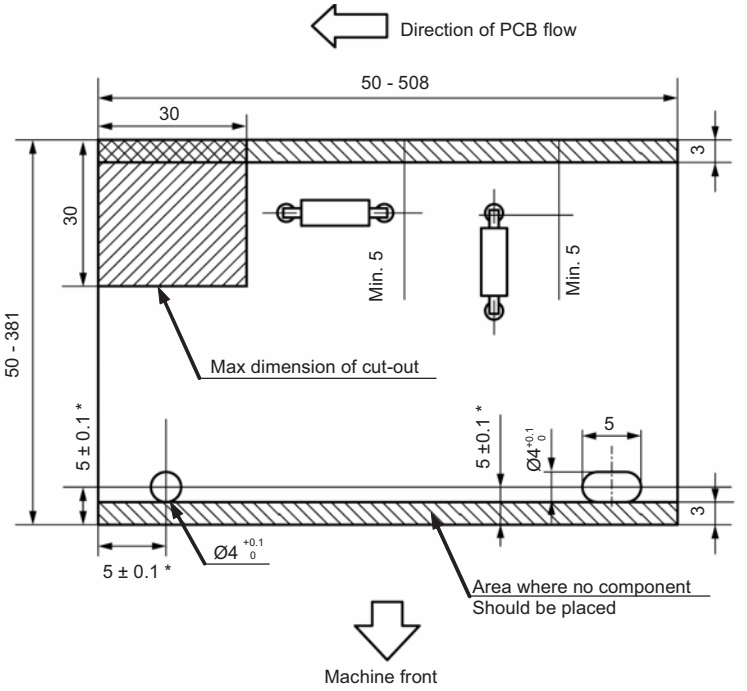

Note 1. 5 mm dimensions marked with an asterisk are standard values.
Other dimensions are optional.
2. Pleas consult Panasonic for PCB such as a cut-out PCB.

6.2 PCB Condition before Placement

According to the height of components inserted with the upstream machine and components to be inserted with AV131, the XY table movement within the tact can be selected. (Multi-interlock function)

(1) XY table movement within the tact: X = 30 mm, Y = 34 mm
(When the interlock 1 is selected)

(Unit: mm)

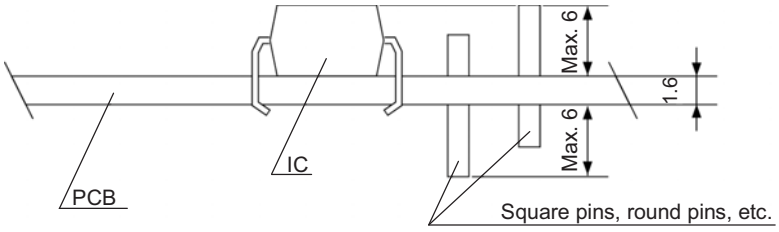

(2) XY table movement within the tact: X = 35 mm, Y = 39.5 mm
(When the interlock 2 is selected)

(Unit: mm)

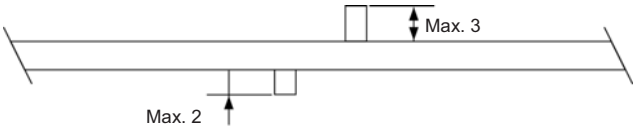

* Selectable by screen setting.

6.3 PCB Accuracy

<table>
<tr><th>Item</th><th>Specification</th></tr>
<tr><td>PCB Thickness</td><td>1.6 mm ± 0.15 mm
Option: 0.6 mm to 2.0 mm (Please see “9. Option B-2.”)
Consult Panasonic for thickness other than the above.</td></tr>
<tr><td>PCB Warp Tolerance</td><td> 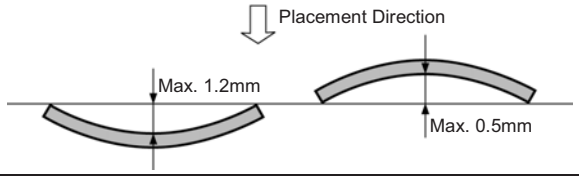
</td></tr>
<tr><td>Insertion Hole Diameter</td><td>(Unit: mm)
<table>
<tr><th rowspan="2"></th><th colspan="2">Hole Type and Diameter</th></tr>
<tr><th>Punched Hole</th><th>Drilled Hole</th></tr>
<tr><td>Lead Wire Diameter</td><td> 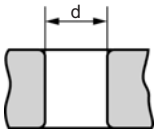
</td><td> 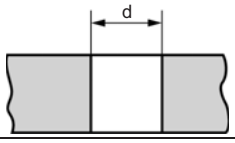
</td></tr>
<tr><td>$\varnothing 0.8^{0}_{-0.05}$</td><td>$\varnothing 1.2^{+0.1}_{0}$</td><td>$\varnothing 1.3^{+0.1}_{0}$</td></tr>
<tr><td>ø0.6 ± 0.05</td><td>$\varnothing 1.0^{+0.1}_{0}$</td><td>$\varnothing 1.1^{+0.1}_{0}$</td></tr>
<tr><td>ø0.5 ± 0.05</td><td>$\varnothing 0.9^{+0.1}_{0}$</td><td>$\varnothing 1.0^{+0.1}_{0}$</td></tr>
<tr><td>$\varnothing 0.4^{+0.05}_{0}$</td><td>$\varnothing 0.8^{+0.1}_{0}$</td><td>$\varnothing 0.9^{+0.1}_{0}$</td></tr>
</table>
* If you use hole diameter other than those designated, the insertion rate and component holding condition may be affected..</td></tr>
<tr><td>Insertion Hole Accuracy</td><td>(Unit: mm)
 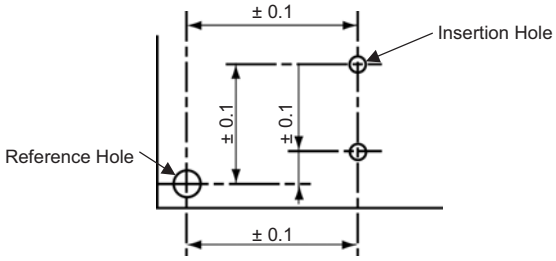

Variability between PCBs must be within ±0.1 mm.</td></tr>
</table>

6.4 Dead Space around Positioning Pin and on the PCB Edge

(Unit: mm)

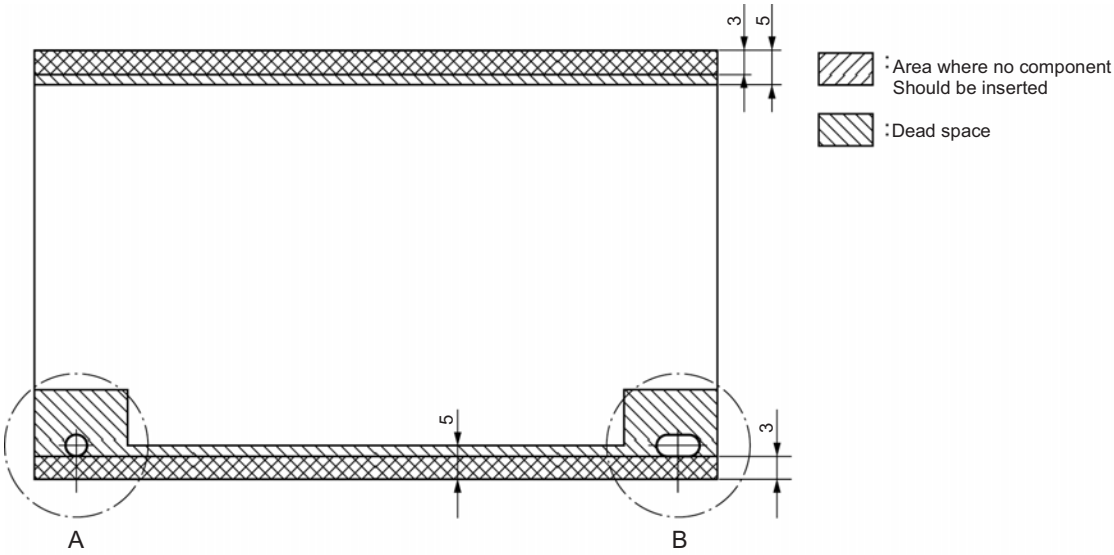

Details of A

- Dead space in the 0 °, 180 ° direction (X, -X)

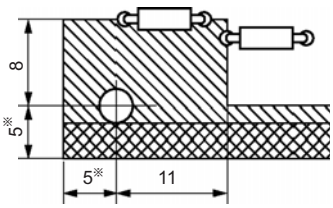

- Dead space in the 90 °, 270 ° direction (Y, -Y)

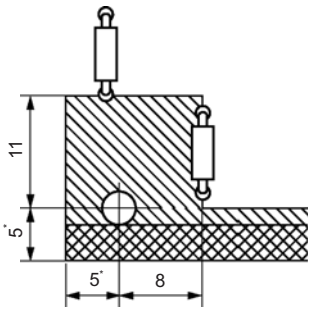

Details of B

- Dead space in the 0 °, 180 ° direction (X, -X)

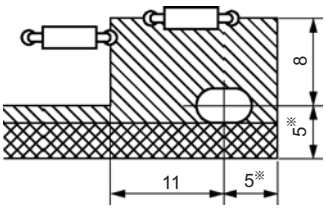

- Dead space in the 90 °, 270 ° direction (Y, -Y)

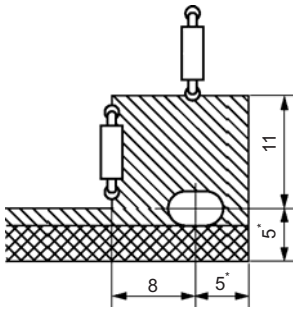

*Dimension with an asterisk (*) is for standard specification.

6.5 Insertion Tooling Dead Space

The shaded area on the illustration below are the area of dead space during insertion when using insertion tooling (the insertion unit on the PCB upper surface and the anvil on the lower surface).
You must also leave that dead space open for adjacently positioned components.

(Unit: mm)

Dead Space for Insertion Unit

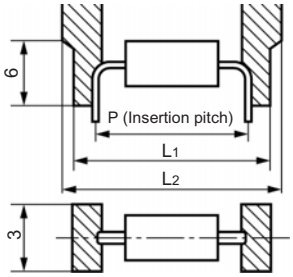

L1	L2
P + 2.0	P + 7.5

Dead Space for Anvil

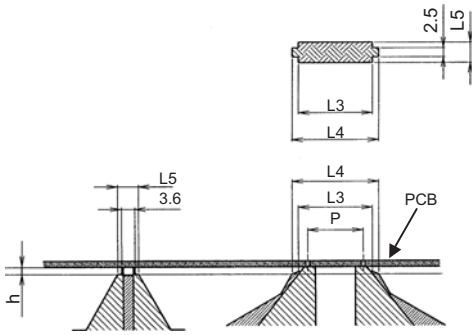

h	L3	L4	L5
0	P + 2.2	P + 2.2	3.6
1	P + 4	P + 4	3.6
2	P + 5.6	P + 9	6
6	P + 12	P + 14	11

6.6 Calculations of Necessary Space between Adjacent Components

0.2 mm room is require to include to the values below.
Jumper wire diameter: d
Pre-insertion component lead diameter: d1
Pre-insertion component body diameter: D1
Insertion component body diameter: D2

(Unit: mm)

Axial Component and Axial Component	Axial Component and Jumper Wire (When JW is previously inserted)
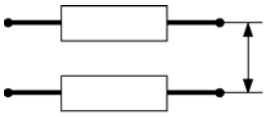	
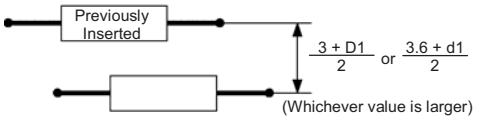	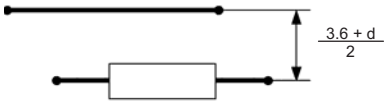
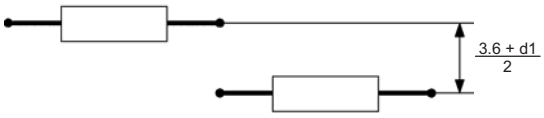	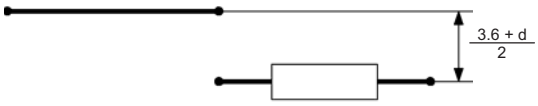
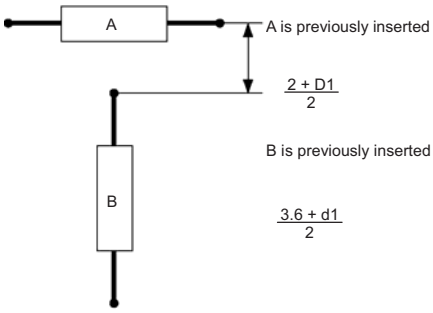	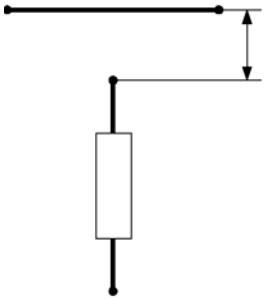
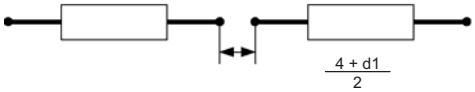	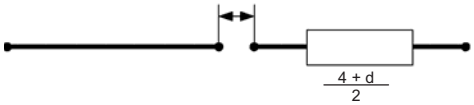
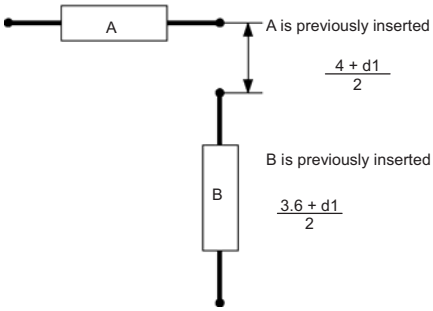	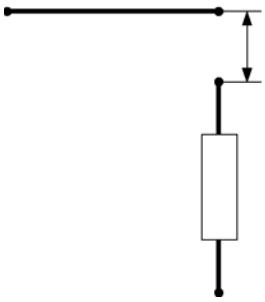

7. Standard Functions

7.1 Programming Functions

(1) Step & Repeat
The steps of the designated pattern are repeated in placement order in each subsequent section of sectioned PCBs.
(2) Pattern Repeat
After the designated pattern is placed in one section of a sectioned PCB, it is placed in each subsequent section of sectioned PCBs.
(3) Terminal Coordinate Conversion Program
After the designated pattern is placed in one section of a sectioned PCB, it is rotated through 90°, 180°, and 270°and placed in each subsequent section.
(4) Alternate Component Supply Function (Z Alternation)
The operator sets two or more feeders or tray plates containing the same component type in advance. When one feeder or tray plate runs out of components, component pickup automatically continues from the other feeder.
(5) Multi-Origin Function (Optional)
For origin of component supply, by designating the feeder number indicating the feeder position, the component supply origin can be set according to each program, facilitating production changeover.

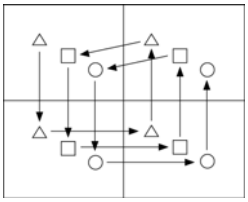

Step & Repeat

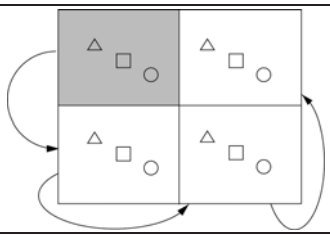

Pattern Repeat

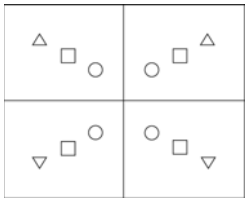

Terminal Coordinate Conversion Program

Alternate Component Supply Function (Z Alternation)

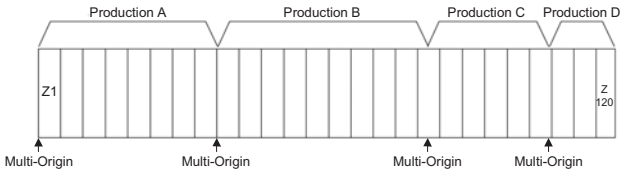

Multi-Origin Function

7.2 3-Color Signal Tower

Color of signal tower and lighting standard

	Signal Color		Classification	Lighting Standard
	Standard	Option		
(Light 1) Red (Option: Yellow) (Light 2) Yellow (Option: White) (Light 3) Green	Red	Yellow	Error Stop	Machine stops and light up when error occurred. • Light up when Insertion, loader, recognition error occurred. • Blink when components are exhausted. Machine stops, need manual operation to return to normal. Light is off by reset button after error correction.
	Yellow	White	Warning	Machine is still in operation when the advance stop light is up. • Blink as the warning of component exhaustion. • Light up when PCB waiting occurred. Machine continued to operate and manual operation is necessary. (component replenishment) Automatic light off after warning conditions are lifted or by reset button.
	Green	Green	In Operation	Light up during production operation on AUTO • Light off when machine stopped. • When red signal is up, green light will be off.

*Lighting up will have priority over blinking when both occurred at the same time.

8. Standard Machine Configuration

■ Main Body

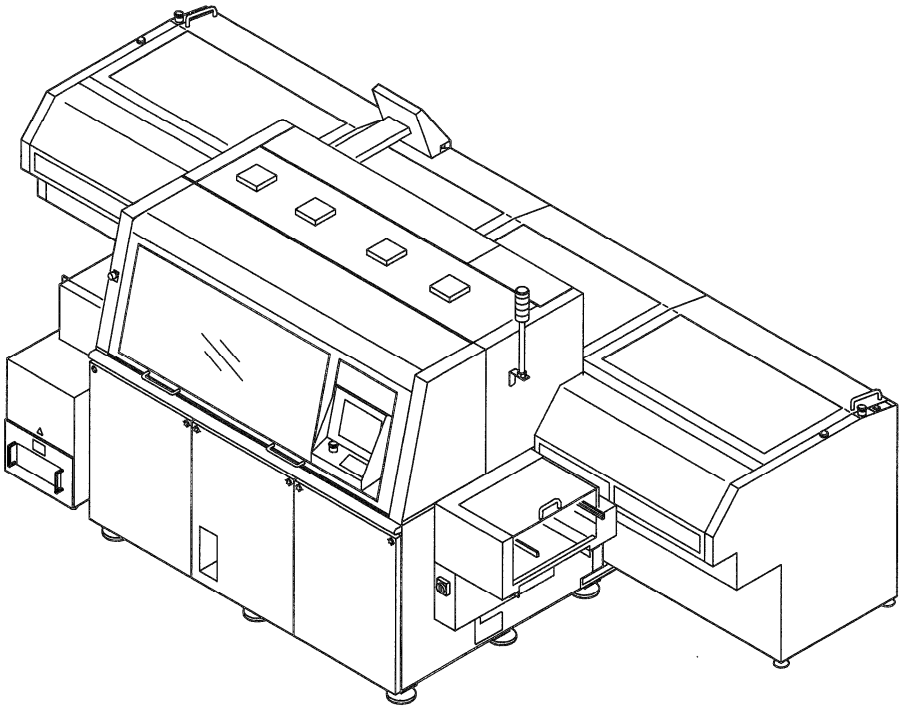

* NM-EJA3A

■ Accessories

Item	Qty.
Shaft locking metal fittings (for machine transport)	1 set
Wrench for adjustment bolt	2 pieces
Tool for component detection sensor	1 piece
Bracket for component cartridge	6 pieces
Pin puller	1 piece
Maintenance switch key	1 set
Manual • Operation Manual • Programming Manual • Maintenance Manual • Reference Manual Parts List Control wiring diagram	1 copy
System disk (SD card) • For system • For saving machine parameters • For password change	1 set

9. Option

Options are classified as follows.

Category	Description
Factory	These options need to be supported when the machine is being manufactured before shipment.
On-site	These options can be added after the machine has been delivered. However, a construction work is required on the spot.
Customer	These options can be added after the machine has been delivered. A construction work on the spot is not required.

*Depending on user's machine specification, the manufacturing No., etc., some options may not fit the above classification.
For details, please consult Panasonic before purchasing the machine.

Please select options which answer your purposes.

No.		Purpose / Feature	Option name	Category
A	1	To expand the transfer PCB dimensions. (Up to 530 x 381 mm)*1	Enlargement of transferable PCB size	On-site
	2	To expand the insertion PCB dimensions. (Up to 650 mm × 381 mm)	Enlargement of insertion PCB size	On-site
	3	Loading 2 PCBs to XY table to produce 2 PCBs in one process.	2 PCB transfer	On-site
	4	To push the PCB to which components have been inserted into the magazine rack from the unloader.	P-PUSH	On-site
B	1	To change rail width of the XY table, loader and unloader automatically.	Automatic width adjustment	Factory
	2	To apply to PCB thickness of 0.6 mm to 2.0 mm.	PCB thickness 0.6 mm to 2.0 mm	Customer
	3	To support the reference pin specifications.	Reference pin specifications	Customer
C	1	Required for insertion of jumper wires of which insertion pitches are between 5 and 26 mm.	Jumper Wire	Factory
D	1	To print out various information.*2	Printer	On-site
	2	To sound warning buzzer when the yellow light of the signal tower lights up.	Warning buzzer	On-site
	3	To communicate with the host through the RS-232C. (Control command)	Host applicability (RS232C)	On-site
	4	Required for interface set by SMEMA (Surface Mount Equipment Manufacturers Association).	SMEMA	On-site

*1: Please consult us for the combination of this spec and the automatic width adjustment (reference pin: X direction).
*2: Regarding text print, only English can be printed out.

A-1	To expand the transfer PCB dimensions. (Up to 530 mm x 381 mm)

On-site

Enlargement of transferable PCB size

- Maximum dimensions: 508 mm × 381 mm → 530 mm × 381 mm

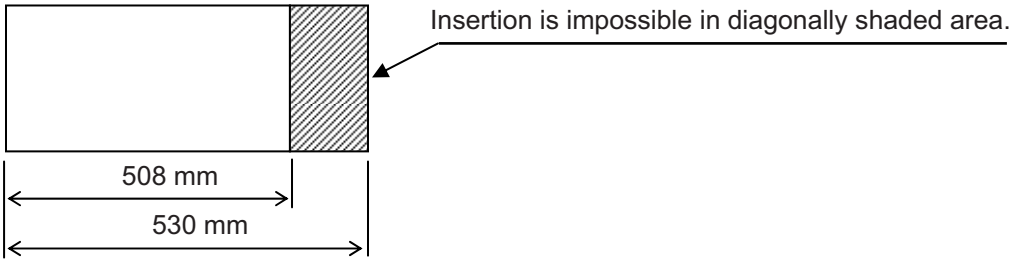

* Please consult Panasonic for the combination of this spec and the automatic width adjustment (reference pin: X direction).

A-2	To expand the insertion PCB dimensions. (Up to 650 mm × 381 mm)

On-site

Enlargement of insertion PCB size

- Applicable PCB size: 50 mm x 50 mm to 508 mm x 381 mm(standard) → 300 mm x 50 mm to 650 mm x 381 mm
- By changing to PCB transfer adaptor and positioning pin lever, PCB size of 50 mm x 50 mm or larger can be supported.
- Insertion hole recognition and insertion are possible in all area.
- For insertion in the shaded area shown below, it takes about 2 sec. to slide a PCB.

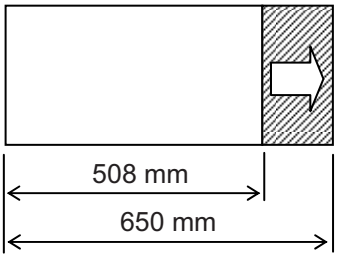

- Cannot select "Automatic rail width adjustment (Positioning pin: X dir.)", "Edge positioning" and "Left to right flow" at the same time.

A-3	Loading 2 PCBs to XY table to produce 2 PCBs in one process.

On-site

2 PCB transfer

- Maximum size: Min. 50 mm × 50 mm, Max. 250 mm × 250 mm (PCB H/W ratio: H< W)

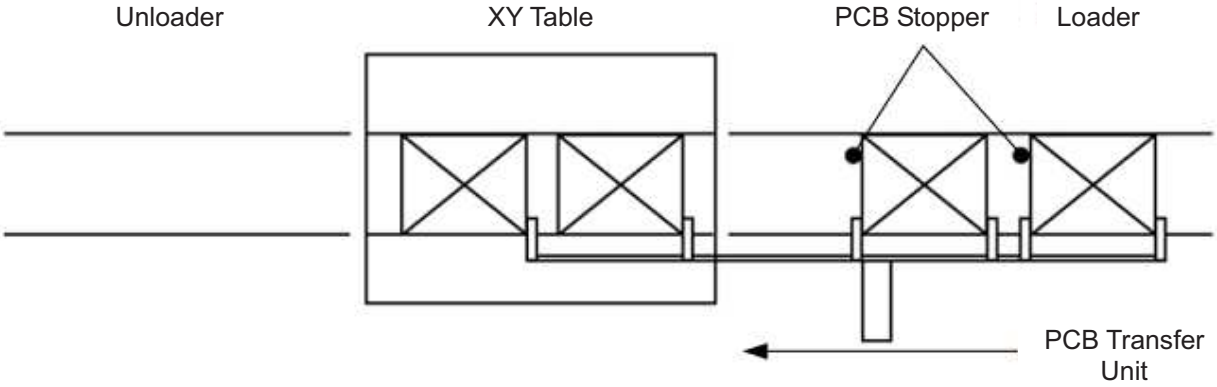

- Please consult Panasonic for the combination with automatic rail width adjustment (Positioning pin: X direction)

A-4	To push the PCB to which components have been inserted into the magazine rack from the unloader.

On-site

P-PUSH

- When the magazine storage unit is used, this becomes necessary to push the PCB to which components have been inserted into the magazine rack.

B-1	To change rail width of the XY table, loader and unloader automatically.

Factory

Automatic Width Adjustment

- This is for automatic rail adjustment of loader and unloader rails and XY table of the PCB transfer unit. Width adjustment amount is set based on the host data or internal data.
- There are two methods: 3 axis and 4 axis (as illustrated below)

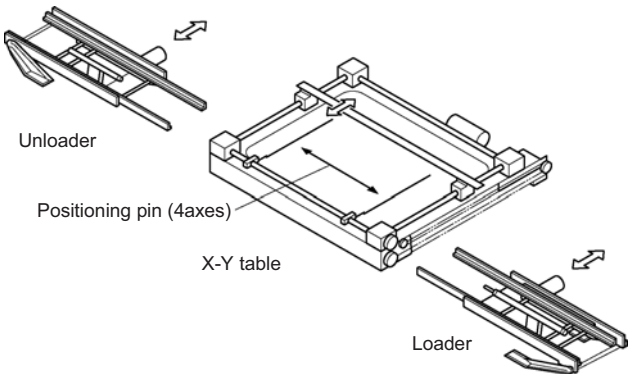

Automatic width adjustment method	
3-axis	4-axis
Loader rail width Unloader rail width XY table rail width	Loader rail width Unloader rail width XY table rail width Positioning pin

∗ The pulse motor is the drive method.
The minimum transfer increment is 0.1 mm.
∗ Contact our sales representative for 4-axis automatic width adjustment. (Pin or Edge positioning)

B-2	To apply to PCB thickness of 0.6 mm to 2.0 mm.

Customer

PCB width 0.6 mm to 2.0 mm

- According to the specifications of PCB thickness, guide rail on the XY table needs to be exchanged, and the insertion guide height needs to be adjusted.
- Regarding guide rail, please select from the followings: ①: for 0.6 mm, 0.8 mm, and 1.0 mm; ②: for 1.2mm and 1.4 mm; ③: for 1.6 mm, 1.8 mm, and 2.0 mm (standard).

B-3	To support the reference pin specifications.

Customer

Reference pin specifications

- If additional sets of reference pins are required, please select the dimensions of positioning pin (ϕA), positioning collar (C), and positioning lever (D).

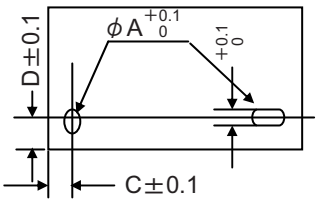

C-1	Required for insertion of jumper wires of which insertion pitches are between 5 mm and 26 mm.
Factory	
Jumper Wire	
・Refer to “3.2 Standard Functions” for insertion tact time. ・Refer to “5.4 Jumper Wire Specifications” for packaging.	

D-1	To print out the production management information and program data.
On-site	
Printer	
・This prints various information, such as production management information, programming data, and others. ・Regarding text print, only English can be printed out.	

D-2	To sound warning buzzer when the red light of the signal tower lights up.
On-site	
Warning buzzer	
・The warning buzzer buzzes when the red light of the signal tower lights up (Flicker, Tone or Buzzer). ・Warning buzzer ON/OFF switching and warning buzzer muffling can be operated from the screen of the monitor.	

D-3	This is for communicating with the host through the RS-232C. (Control command)
On-site	
Host applicability (RS232C)	
■ **Panasonic Package Host Applicability** ・**Remote control and real time event message transmission** System interconnected with your application to enable remote control and real time event message transmission. ・**Line Manager Lite Interface** Interconnected with Line Manager Lite to enable machine data deletion instruction from the personal computer. ・**Line Manager V2 Interface** Interconnected with Line Manager V2 to enable: - Machine data deletion instruction from the personal computer - Remote control - Real time event message - Inside machine PCB presence check	

D-4	Required for interface set by SMEMA (Surface Mount Equipment Manufacturers Association).
On-site	
SMEMA	
SMEMA (A) ・Connection control signal and a set of connectors SMEMA (B) ・Connection control signal and a set of connectors ・Applicable to transfer height of 940 mm	

10. Paint Color

■ **Standard color**
White W-13 (G50)

■ **Designation of colors**
This page is used when a customer needs to designate colors.

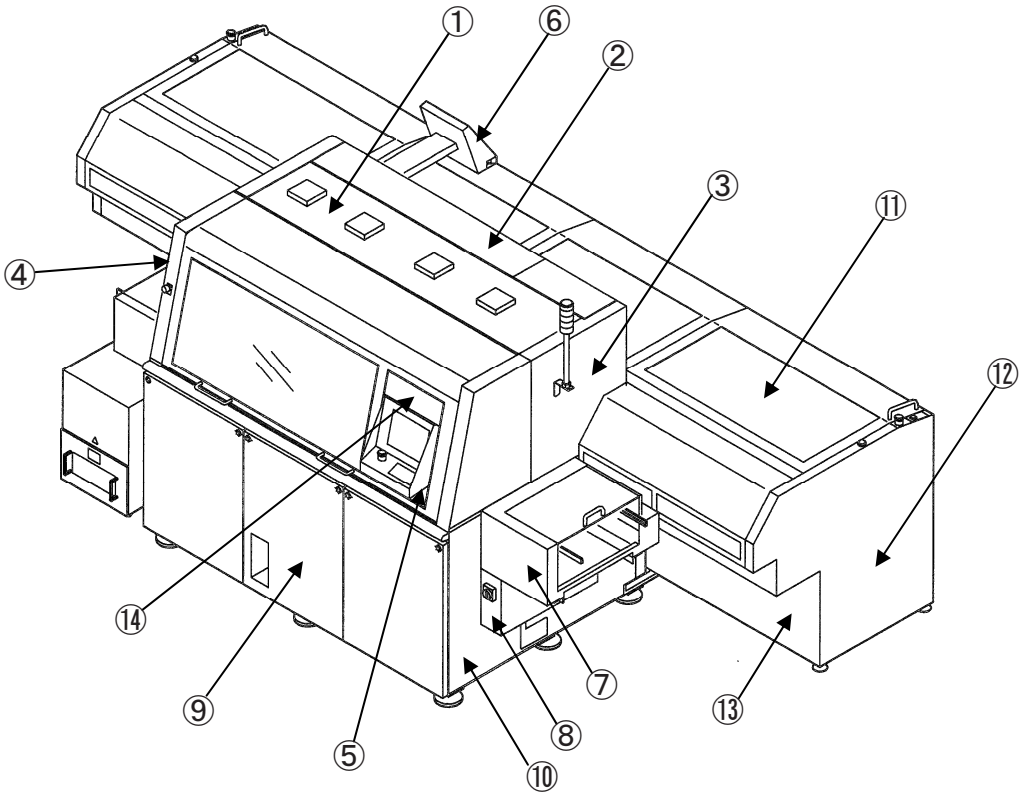

* NM-EJA3A

No.	Place where you can designate the color (Place painted standard color)	Designated color (As a rule, color sample is necessary.)
①	Top cover	
②	Back cover	
③	Side plate, cover (left and right)	
④	Front side cover (left and right)	
⑤	Main control panel external cover	
⑥	Rear control panel external cover	
⑦	Loader and unloader safety cover	
⑧	Main power switch cover	
⑨	Front door (3 pieces)	
⑩	Side plate lower cover (left and right)	
⑪	Component supply unit door	
⑫	Component supply unit side cover (left and right)	
⑬	Component supply unit front cover (left and right)	
⑭	Main control panel upper cover	

Note: For the following we cannot change the original color.
- Machine internal cover
- Open/Close cover aluminum frame
- Belt buckle line (rubber)
- Printer etc. on the market
- Tape waste collecting box

11. Safety devices

AV131 has the following safety devices for the safety use of machine.
Machine operation is immediately stop when an emergency switch is press or the cover is open when the machine is in operation.

■ **NM-EJA3A**

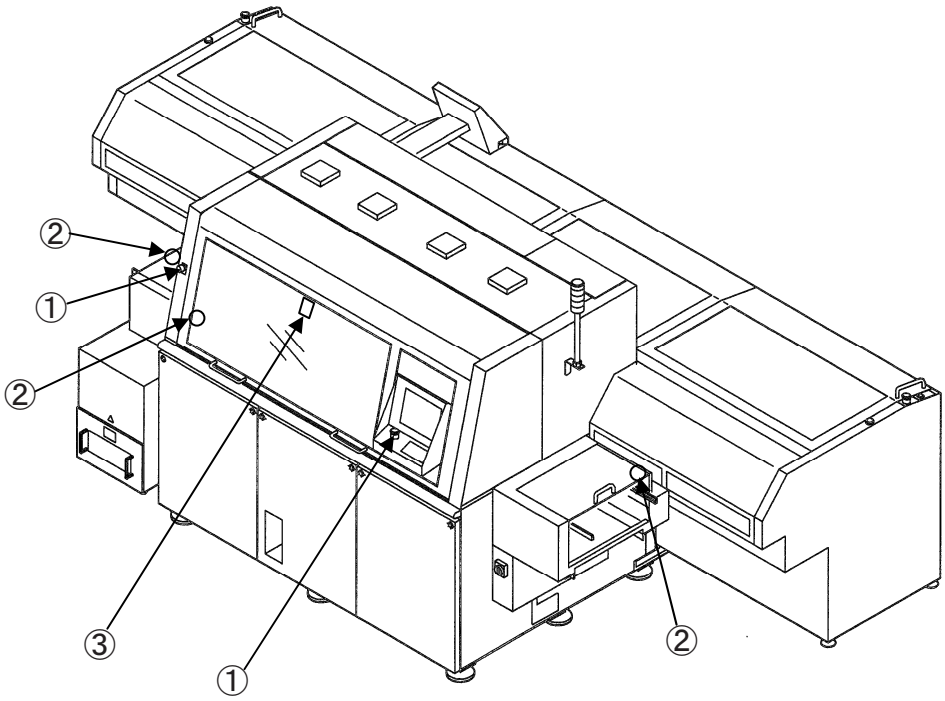

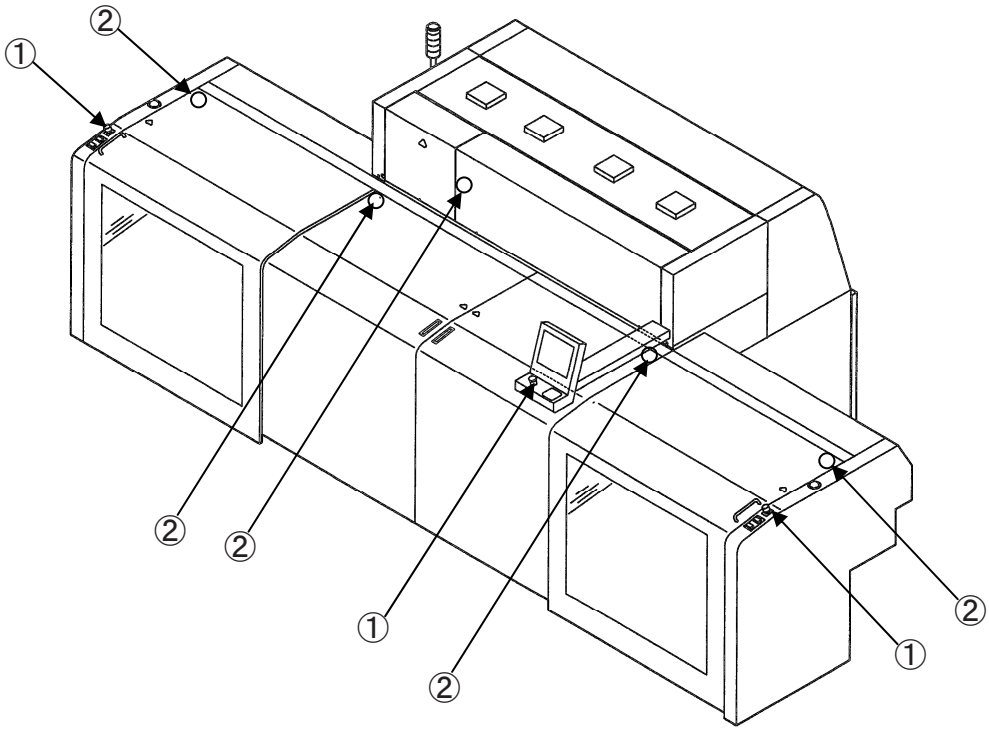

①: Emergency stop switch
②: Interlock switch
③: Maintenance switch

■ **NM-EJA2A**

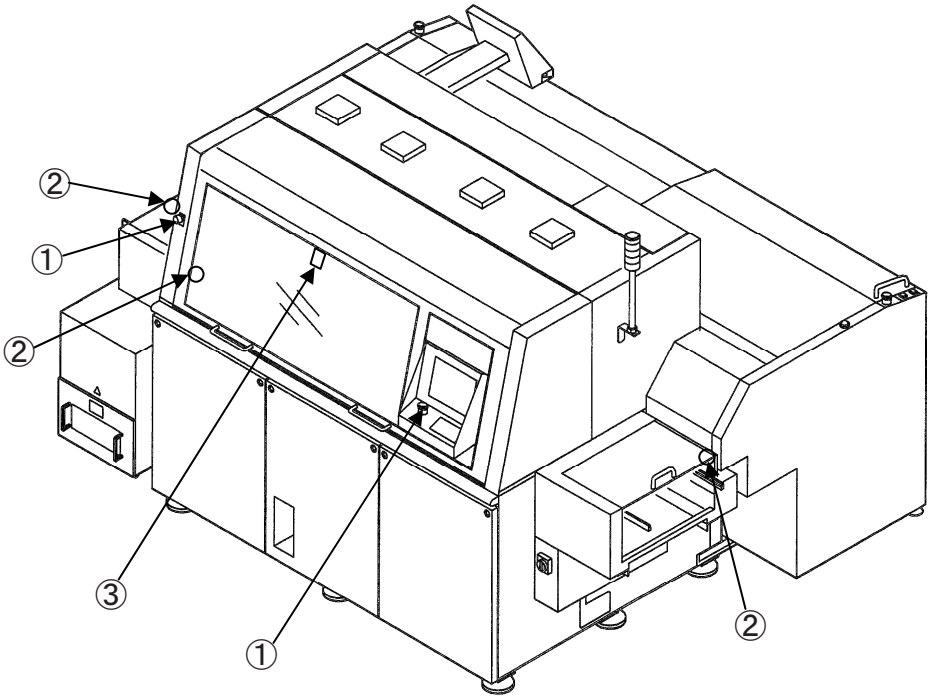

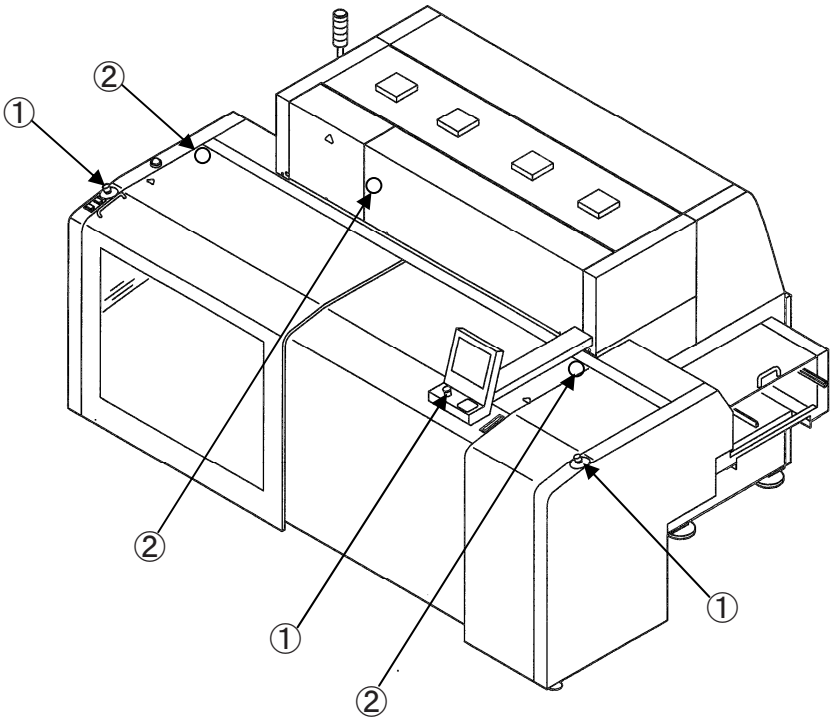

①: Emergency stop switch
②: Interlock switch
③: Maintenance switch

12. Electric / Pneumatic

12.1 Electric Source Unit

We recommend you to connect four-conductor cable (more than AWG#10).
(The cable is not supplied.)
As shown below, cable should be clamped at entrance place.
Recommendation

1. Terminal connection pin
   Manufacturer: Weidmuller
   Model: H6/20D
2. Cable outer diameter
   ϕ9 mm to ϕ17 mm
3. Establish connection between factory power supply and main power switch. The cable is not supplied.
   - For power supply cable, Cab-Tire cable (oil-resistant) is recommended.
     Use cable of which outside diameter is between 13.0 mm and 21.0 mm so that the cable holder can fix the cable securely.
     (Hold the cable by the cable holder and pull it by 100 N to check that it will not be pulled out.)
   - For ground, yellow and green spiral cable or yellow and green stripe cable is recommended.
     The outside diameter should be 13.0 mm to 21.0 mm.
   - Since trouble may occur if cable conductors come apart, use H-sleeve.

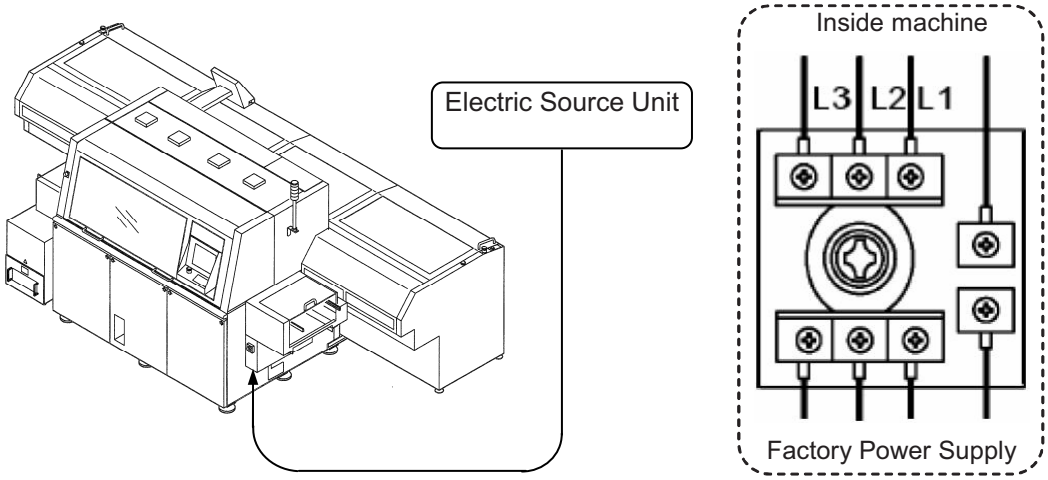

*The cable is not supplied.

12.2 Pneumatic Source Unit

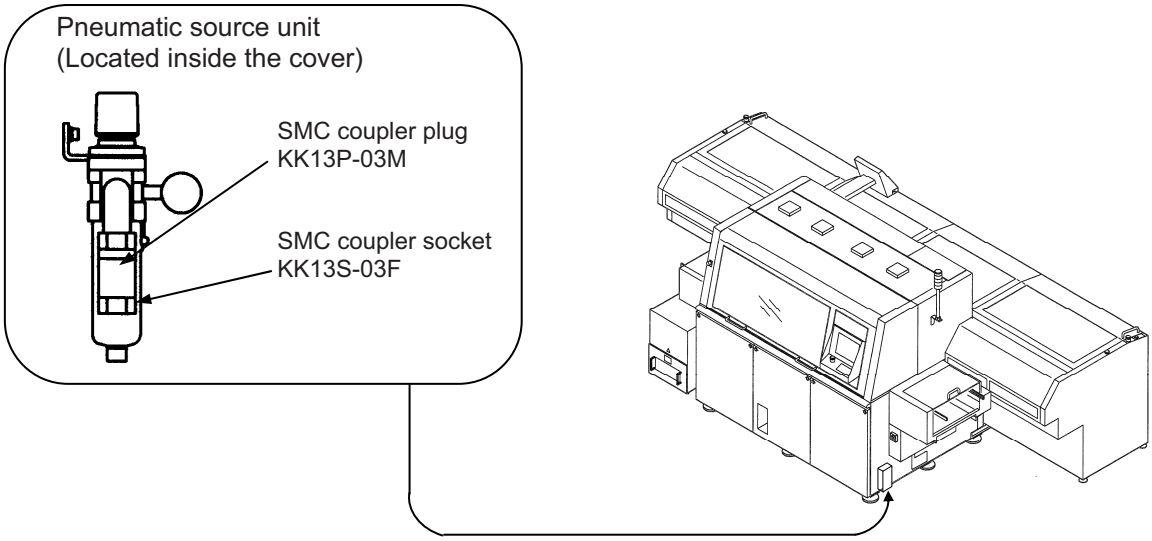

*An air hose is not supplied.

13. Dimensions

13.1 Pneumatic/Electric Source Input Position (NM-EJA3A)

(Unit: mm)

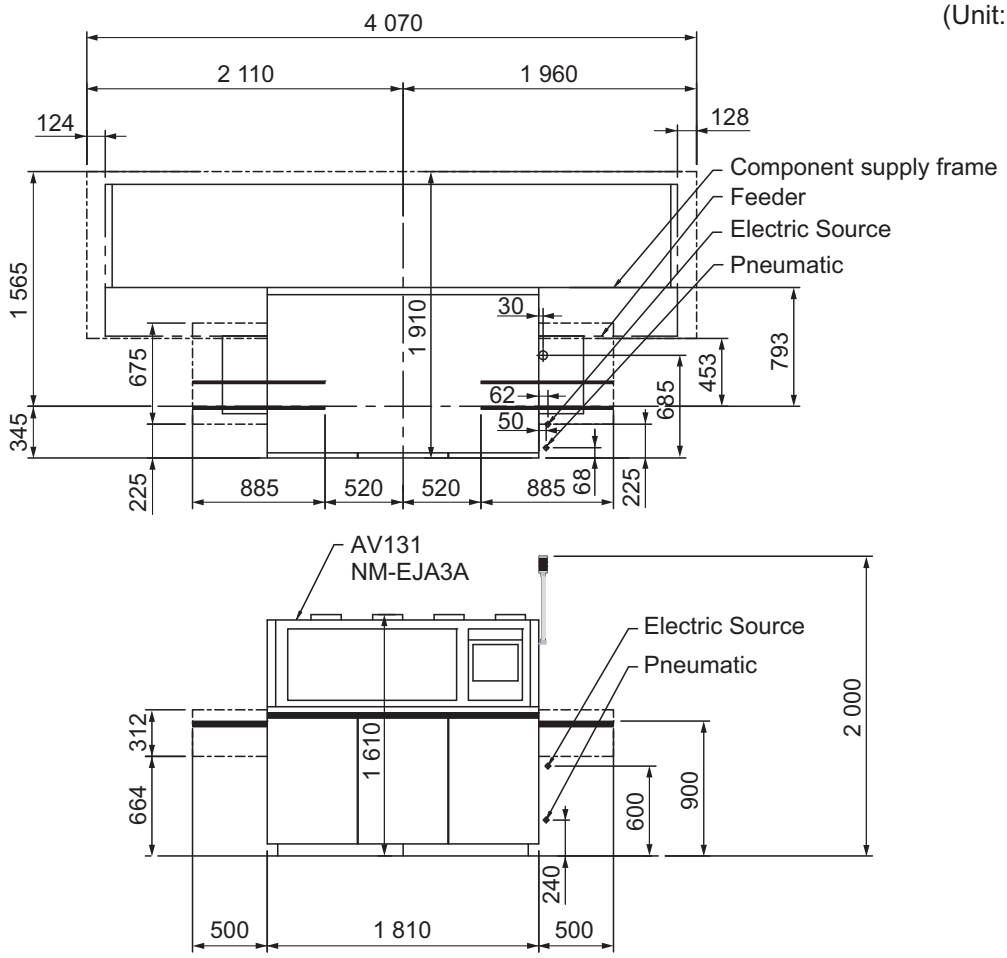

*Transportation height can be adjusted to the range from 900 mm to 920 mm.

13.2 Adjustment Bolt Diagram (NM-EJA3A)

(Unit: mm)

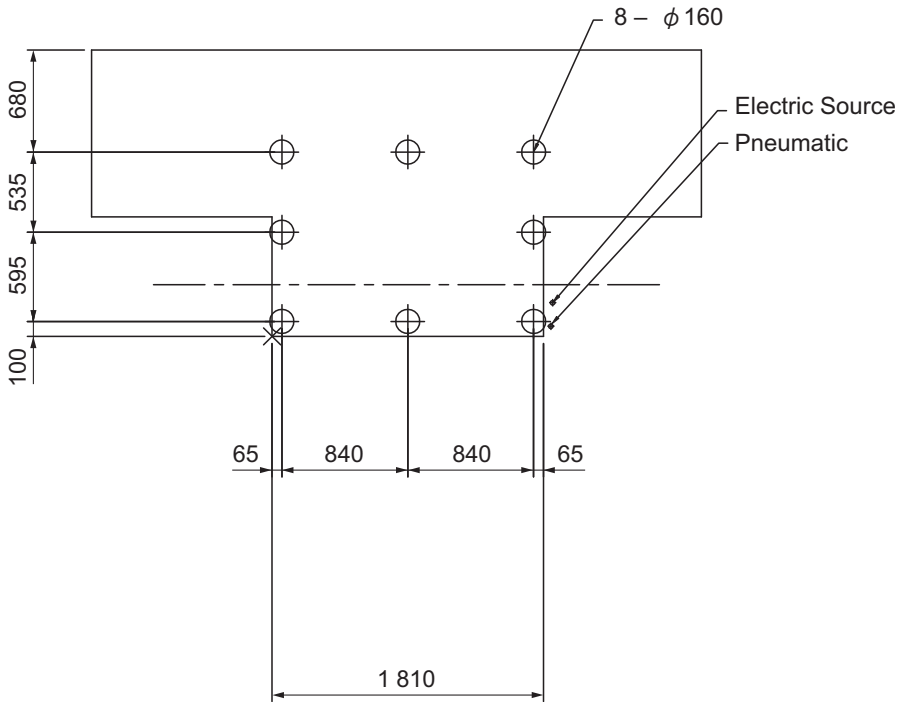

AV131
NM-EJA3A

13.3 Pneumatic/Electric Source Input Position (NM-EJA2A)

(Unit: mm)

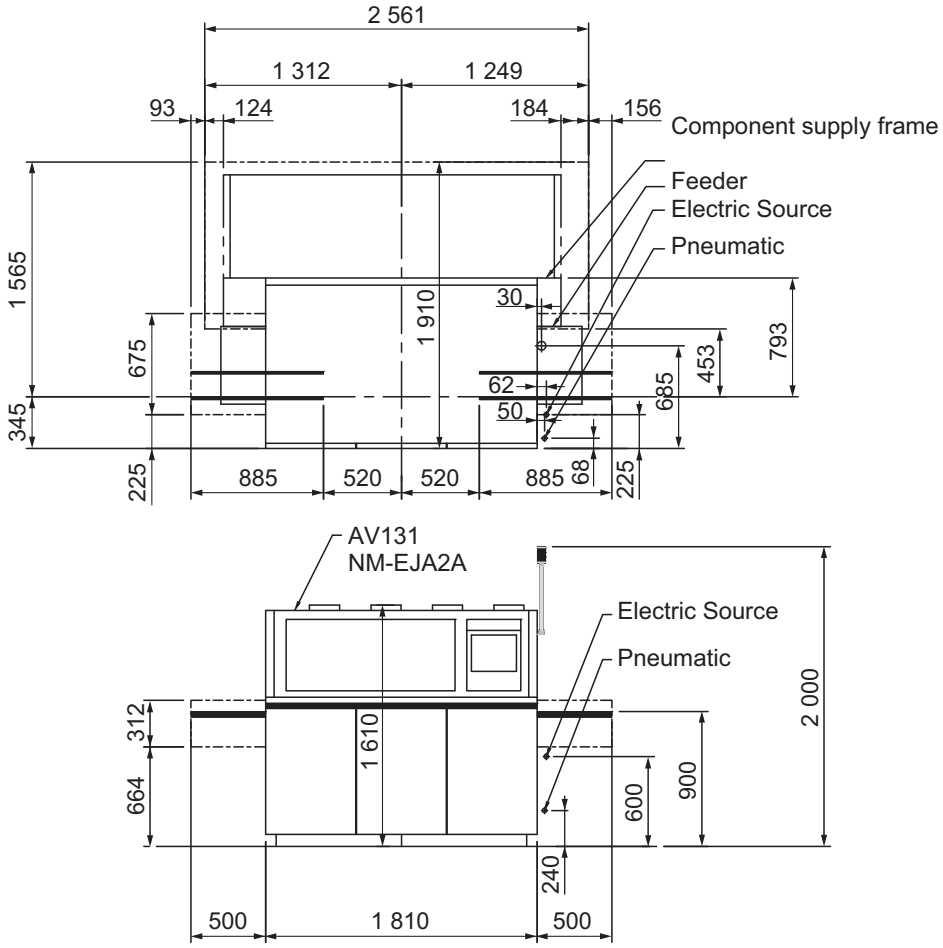

*Transportation height can be adjusted to the range from 900 mm to 920 mm.

13.4 Adjustment Bolt Diagram (NM-EJA2A)

(Unit: mm)

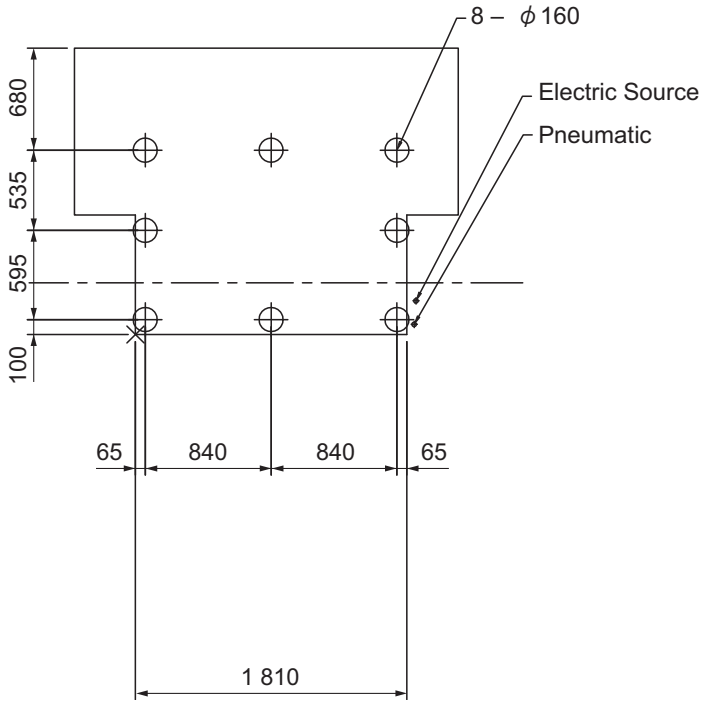

AV131
NM-EJA2A

Some of our products fall under the export control items (or technologies) established in the Foreign Exchange and Foreign Trade Act. When exporting (or providing technologies overseas), please check its legal restrictions and be sure to take necessary procedures such as to obtain the export permission.

Panasonic Factory Solutions Co., Ltd.

1375 Kamisukiawara, Showa-cho, Nakakoma-gun, Yamanashi 409-3895, Japan

TEL +81-55-275-9148 FAX +81-55-275-6269

* Recycled paper is used for this Specification.