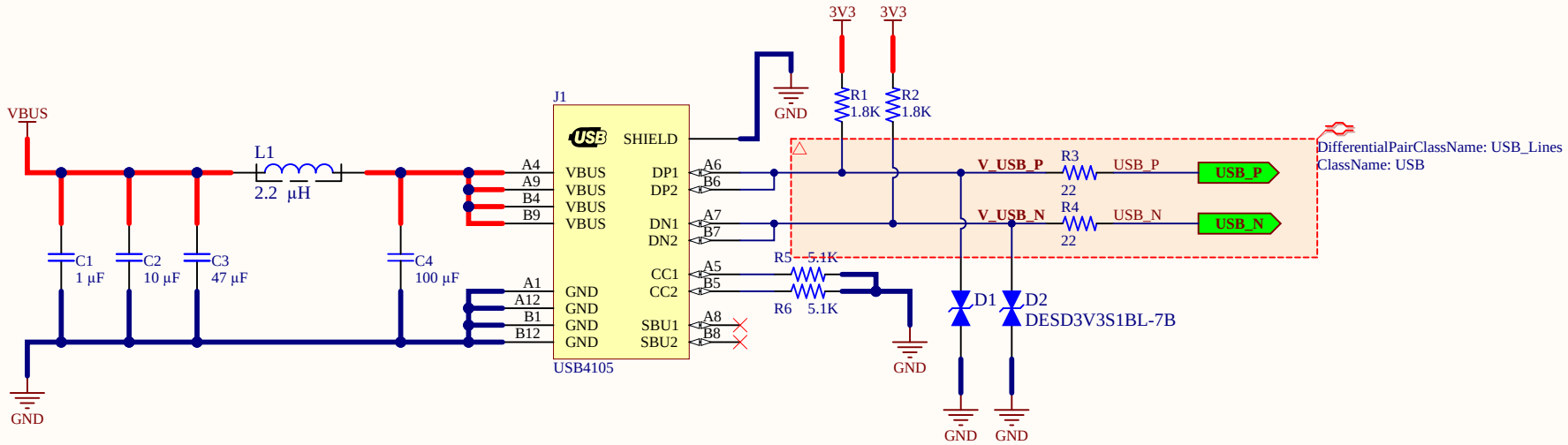

Title: *USB-C 2.0 Device Mode Usage Method*		*Mergen Elektronik*	MERGEN
Size: A4	Number: 25-03-0001	Revision: v1.0.0	06820 Etimesgut / Ankara Türkiye
Date: 6.02.2025	Time: 01:01:18	Sheet 1 of 1	Drawn By : Ekrem T. Fırat
Project Free Documents			