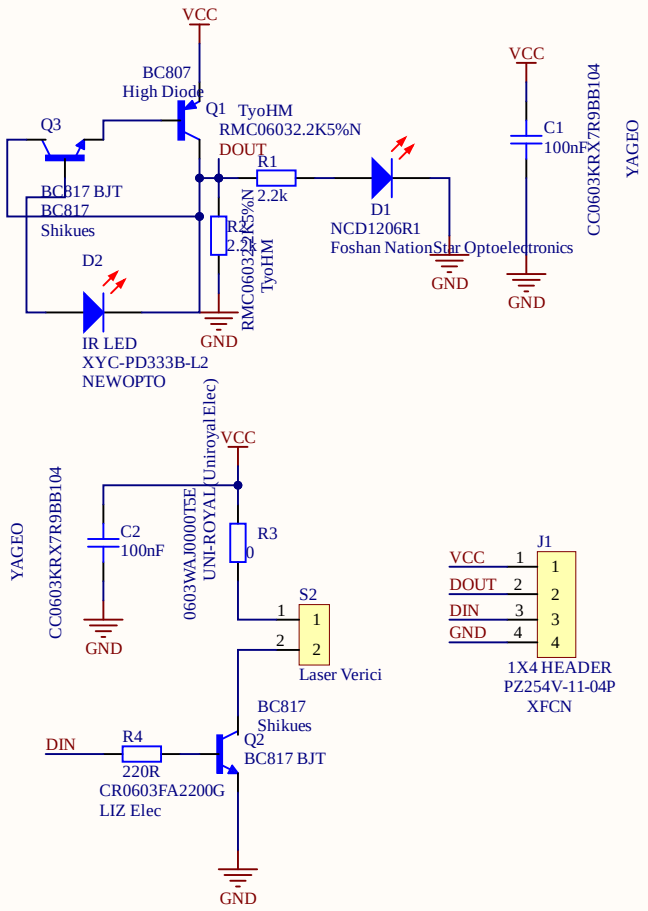

Title	LASER ALICI VERİCİ KARTI	
Size A4	Number	Revision 0.2
Date: 10.31.2022		Sheet of
File: C:\Users\..\Laser_A_V.SchDoc		Drawn By: Muhammet OKUDAN

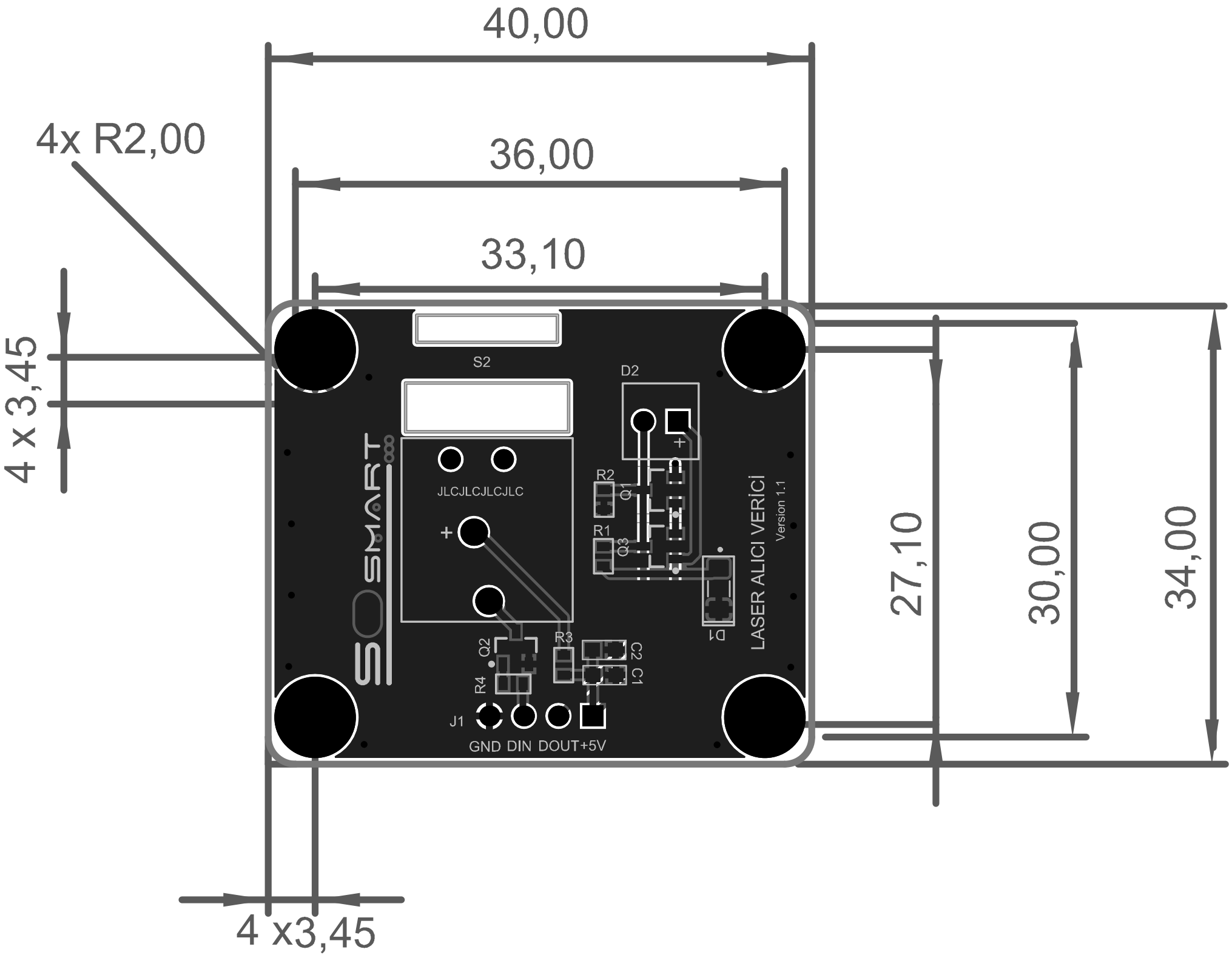
40,00
4x R2,00
36,00
33,10
4 x 3,45
S2
D2
JLCJLCJLCJLC
R2
Q1
R1
Q3
LASER ALICI VERİCİ
Version 1.1
D1
Q2
R3
C2
C1
R4
J1
GND DIN DOUT+5V
27,10
30,00
34,00
4 x3,45